AUTHENTICATED
U.S. GOVERNMENT
INFORMATION
GPO

FEDERAL REGISTER

Vol. 79 Monday,
No. 105 June 2, 2014

Pages 31205–31842

OFFICE OF THE FEDERAL REGISTER

The **FEDERAL REGISTER** (ISSN 0097–6326) is published daily, Monday through Friday, except official holidays, by the Office of the Federal Register, National Archives and Records Administration, Washington, DC 20408, under the Federal Register Act (44 U.S.C. Ch. 15) and the regulations of the Administrative Committee of the Federal Register (1 CFR Ch. I). The Superintendent of Documents, U.S. Government Printing Office, Washington, DC 20402 is the exclusive distributor of the official edition. Periodicals postage is paid at Washington, DC.

The **FEDERAL REGISTER** provides a uniform system for making available to the public regulations and legal notices issued by Federal agencies. These include Presidential proclamations and Executive Orders, Federal agency documents having general applicability and legal effect, documents required to be published by act of Congress, and other Federal agency documents of public interest.

Documents are on file for public inspection in the Office of the Federal Register the day before they are published, unless the issuing agency requests earlier filing. For a list of documents currently on file for public inspection, see *www.ofr.gov.*

The seal of the National Archives and Records Administration authenticates the Federal Register as the official serial publication established under the Federal Register Act. Under 44 U.S.C. 1507, the contents of the **Federal Register** shall be judicially noticed.

The **Federal Register** is published in paper and on 24x microfiche. It is also available online at no charge at *www.fdsys.gov*, a service of the U.S. Government Printing Office.

The online edition of the **Federal Register** is issued under the authority of the Administrative Committee of the Federal Register as the official legal equivalent of the paper and microfiche editions (44 U.S.C. 4101 and 1 CFR 5.10). It is updated by 6:00 a.m. each day the **Federal Register** is published and includes both text and graphics from Volume 59, 1 (January 2, 1994) forward. For more information, contact the GPO Customer Contact Center, U.S. Government Printing Office. Phone 202-512-1800 or 866-512-1800 (toll free). E-mail, *gpocusthelp.com.*

The annual subscription price for the **Federal Register** paper edition is $749 plus postage, or $808, plus postage, for a combined **Federal Register, Federal Register** Index and List of CFR Sections Affected (LSA) subscription; the microfiche edition of the **Federal Register** including the **Federal Register** Index and LSA is $165, plus postage. Six month subscriptions are available for one-half the annual rate. The prevailing postal rates will be applied to orders according to the delivery method requested. The price of a single copy of the daily **Federal Register,** including postage, is based on the number of pages: $11 for an issue containing less than 200 pages; $22 for an issue containing 200 to 400 pages; and $33 for an issue containing more than 400 pages. Single issues of the microfiche edition may be purchased for $3 per copy, including postage. Remit check or money order, made payable to the Superintendent of Documents, or charge to your GPO Deposit Account, VISA, MasterCard, American Express, or Discover. Mail to: U.S. Government Printing Office—New Orders, P.O. Box 979050, St. Louis, MO 63197-9000; or call toll free 1-866-512-1800, DC area 202-512-1800; or go to the U.S. Government Online Bookstore site, see *bookstore.gpo.gov.*

There are no restrictions on the republication of material appearing in the **Federal Register.**

How To Cite This Publication: Use the volume number and the page number. Example: 77 FR 12345.

Postmaster: Send address changes to the Superintendent of Documents, Federal Register, U.S. Government Printing Office, Washington, DC 20402, along with the entire mailing label from the last issue received.

SUBSCRIPTIONS AND COPIES

PUBLIC

Subscriptions:

Paper or fiche	**202–512–1800**
Assistance with public subscriptions	**202–512–1806**
General online information	**202–512–1530; 1–888–293–6498**

Single copies/back copies:

Paper or fiche	**202–512–1800**
Assistance with public single copies	**1–866–512–1800 (Toll-Free)**

FEDERAL AGENCIES

Subscriptions:

Assistance with Federal agency subscriptions:

Email	*FRSubscriptions@nara.gov*
Phone	**202–741–6000**

Printed on recycled paper.

Contents

Federal Register

Vol. 79, No. 105

Monday, June 2, 2014

Agency for International Development
NOTICES
Agency Information Collection Activities; Proposals, Submissions, and Approvals; Correction, 31283

Agriculture Department
See Rural Utilities Service

Centers for Medicare & Medicaid Services
NOTICES
Agency Information Collection Activities; Proposals, Submissions, and Approvals, 31335–31338

Children and Families Administration
NOTICES
Agency Information Collection Activities; Proposals, Submissions, and Approvals, 31338–31339
Agency Information Collection Activities; Proposals, Submissions, and Approvals:
Federal Case Registry, 31340
Head Start Program Information Report, 31339–31340

Coast Guard
RULES
Safety Zones:
Atlantic Ocean, Virginia Beach, VA, 31220–31222

Commerce Department
See Foreign-Trade Zones Board
See International Trade Administration
See National Oceanic and Atmospheric Administration
NOTICES
Agency Information Collection Activities; Proposals, Submissions, and Approvals:
Gulf of Alaska Ecosystem Indicator Selection, 31296–31297

Commodity Futures Trading Commission
PROPOSED RULES
Exclusion of Utility Operations-Related Swaps with Utility Special Entities from De Minimis Threshold for Swaps with Special Entities, 31238–31247

Comptroller of the Currency
NOTICES
Requests for Nominations:
Mutual Savings Association Advisory Committee and Minority Depository Institutions Advisory Committee, 31406–31407

Department of Transportation
See Pipeline and Hazardous Materials Safety Administration

Education Department
NOTICES
Agency Information Collection Activities; Proposals, Submissions, and Approvals:
Family Educational Rights and Privacy Act Regulatory Requirements, 31315
Literacy Information and Communication System Regional Professional Development Centers:
Waivers; Extension of Project Period, 31315–31317

Energy Department
See Federal Energy Regulatory Commission
NOTICES
Meetings:
Fusion Energy Sciences Advisory Committee; Open Teleconference, 31317–31318
Secretary of Energy Advisory Board, 31317

Environmental Protection Agency
RULES
Identification of Nonattainment Classification and Deadlines for Submission of State Implementation Plan Provisions, etc., 31566–31782
NOTICES
Proposed Consent Decrees under Clean Air Act Citizen Suit, 31325–31326

Export-Import Bank
NOTICES
Agency Information Collection Activities; Proposals, Submissions, and Approvals:
Report of Overdue Accounts under Short-Term Policies, 31326–31327

Federal Aviation Administration
PROPOSED RULES
Airworthiness Directives:
Airbus Helicopters (Previously Eurocopter France) (Airbus Helicopters) Helicopters, 31229–31231
Sikorsky Aircraft Corporation (Sikorsky) Helicopters, 31231–31233
Various Restricted Category Helicopters, 31233–31236
Establishment of Class E Airspace:
Pine Knot, KY, 31236–31237
NOTICES
Passenger Facility Charge Approvals and Disapprovals, 31385–31391
Release of Airport Property:
Columbia Metropolitan Airport, Columbia, SC, 31391–31392
Waivers of Aeronautical Land-Use Assurance:
Alpena County Regional Airport, Alpena, MI, 31392–31393
Scott AFB/MidAmerica Airport, Belleville, IL, 31393–31400

Federal Communications Commission
PROPOSED RULES
Shared Commercial Operations in the 3550–3650 MHz Band, 31247–31282
NOTICES
Auction of Advanced Wireless Services Licenses:
Competitive Bidding Procedures for Auction 97; Comments Request, 31327–31335

Federal Energy Regulatory Commission
NOTICES
Applications:
Turlock Irrigation District and Modesto Irrigation District; Pre-Application Document; Pre-Filing Process, etc., 31318–31319
Compliance Filings:
Iberdrola Renewables, Inc., et al., 31319–31320

Initial Market-Based Rate Filings Including Requests for Blanket Section 204 Authorization:
Northern Natural Gas Co., 31320
Rjumr Energy Partners Corp., 31320–31321
Meetings:
Increasing Market and Planning Efficiency through Improved Software; Technical Conference, 31321–31324
Petitions for Declaratory Orders:
KKR NR I Mineral Holdings II LP, et al., 31324
Petitions for Partial Waivers:
Great River Energy, 31324
Staff Attendances, 31324–31325

Federal Highway Administration
RULES
Metropolitan Planning Organization Representation:
Policy Guidance, 31214–31219
PROPOSED RULES
Statewide and Nonmetropolitan Transportation Planning; Metropolitan Transportation Planning, 31784–31841

Federal Railroad Administration
NOTICES
Applications:
Railroad Signal Systems; Discontinuances or Modifications, 31400
Petitions for Special Approvals of Alternate Standards, 31401
Petitions for Waivers of Compliance, 31401–31403

Federal Reserve System
NOTICES
Changes in Bank Control:
Acquisitions of Shares of a Bank or Bank Holding Company, 31335

Federal Transit Administration
RULES
Metropolitan Planning Organization Representation:
Policy Guidance, 31214–31219
PROPOSED RULES
Statewide and Nonmetropolitan Transportation Planning; Metropolitan Transportation Planning, 31784–31841

Food and Drug Administration
RULES
General and Plastic Surgery Devices:
Reclassification of Ultraviolet Lamps for Tanning, 31205–31214

Foreign-Trade Zones Board
NOTICES
Production Activity Authorizations:
Apple Inc./GT Advanced Technologies Inc., Foreign-Trade Zone 221, Mesa, AZ, 31297
LEEVAC Shipyards, LLC, Foreign-Trade Zone 87, Lake Charles, LA, 31297
Proposed Foreign-Trade Zones; Applications:
Eloy, AZ, 31297
Subzone Applications:
Correa Tire Distributor, Inc., Foreign-Trade Zone 163, Ponce, PR, 31298

Health and Human Services Department
See Centers for Medicare & Medicaid Services
See Children and Families Administration
See Food and Drug Administration
See National Institutes of Health
See Substance Abuse and Mental Health Services Administration

Homeland Security Department
See Coast Guard
See U.S. Customs and Border Protection

Interior Department
See Land Management Bureau

Internal Revenue Service
RULES
Designation of Payor to Perform Acts Required of an Employer; Correction, 31219
NOTICES
Agency Information Collection Activities; Proposals, Submissions, and Approvals, 31407–31408

International Trade Administration
NOTICES
Antidumping Duty Administrative Reviews; Results, Extensions, Amendments, etc.:
Steel Wire Garment Hangers from the People's Republic of China, 31298–31301
Antidumping Duty Orders; Results, Extensions, Amendments, etc.:
1–Hydroxyethylidene–1, 1–Diphosphonic Acid from India and the People's Republic of China, 31301
Polyethylene Retail Carrier Bags from Taiwan, 31302–31303
Antidumping or Countervailing Duty Administrative Reviews; Results, Extensions, Amendments, etc.:
Opportunity to Request Administrative Review, 31303–31305
Sunset Reviews, 31303
Countervailing Duty Administrative Reviews; Results, Extensions, Amendments, etc.:
Steel Wire Garment Hangers from the Socialist Republic of Vietnam, 31305–31306
Five-Year Sunset Reviews, 31306–31308

International Trade Commission
NOTICES
Antidumping Duty Orders; Results, Extensions, Amendments, etc.:
Frozen Fish Fillets from Vietnam; Five-Year Review, 31345–31348

Justice Department
NOTICES
Proposed Consent Decrees under Clean Water Act, 31348

Land Management Bureau
NOTICES
Meetings:
Science Technical Advisory Panel; North Slope Science Initiative; Correction, 31344–31345
Plats of Survey:
California, 31345

Maritime Administration
NOTICES
Marine Highway Projects; Open Season, 31404–31405

National Institutes of Health
NOTICES
Meetings:
National Human Genome Research Institute, 31341–31342
National Institute of Arthritis and Musculoskeletal and Skin Diseases, 31341
National Institute of Dental and Craniofacial Research, 31340–31341
National Institute of Diabetes and Digestive and Kidney Diseases, 31341

National Oceanic and Atmospheric Administration
RULES
Atlantic Highly Migratory Species:
Commercial Gulf of Mexico Blacktip Shark Fishery; Closures, 31227–31228
Endangered and Threatened Wildlife and Plants:
Listing Five Species of Sturgeons as Endangered, 31222–31227
NOTICES
Agency Information Collection Activities; Proposals, Submissions, and Approvals:
Coastal Household Telephone Survey, 31308
Southeast Region Individual Fishing Quota Programs, 31308–31309
Meetings:
Marine Fisheries Advisory Committee, 31310
New England Fishery Management Council, 31313–31314
Science Advisory Board, 31309–31310
Western Pacific Fishery Management Council, 31310–31313
Permits:
Marine Mammals; File No. 14450, 31314–31315

Nuclear Regulatory Commission
NOTICES
Draft Guidance:
Reporting of H–3, C–14, Tc–99, and I–129 on the Uniform Waste Manifest, 31348–31349
Meetings:
Advisory Committee on Reactor Safeguards, 31349–31350

Overseas Private Investment Corporation
NOTICES
Meetings; Sunshine Act, 31350–31351

Pension Benefit Guaranty Corporation
NOTICES
Agency Information Collection Activities; Proposals, Submissions, and Approvals:
Termination of Single-Employer Plans, Missing Participants, 31351–31352

Pipeline and Hazardous Materials Safety Administration
NOTICES
Special Permit Applications; Delays, 31405–31406
Special Permit Applications; Modifications, 31406

Postal Regulatory Commission
NOTICES
Meetings; Sunshine Act, 31352
New Postal Products, 31352

Rural Utilities Service
NOTICES
Funding Availability:
Assistance to High Energy Cost Rural Communities and Bulk Fuel Grants, 31283–31296

Securities and Exchange Commission
NOTICES
Self-Regulatory Organizations; Proposed Rule Changes:
Financial Industry Regulatory Authority, Inc., 31353
International Securities Exchange, LLC, 31372–31375
NASDAQ OMX PHLX, LLC, 31356–31359
National Securities Clearing Corp., 31360–31361
New York Stock Exchange, LLC, 31353–31356
NYSE Arca, Inc., 31362–31368
NYSE MKT, LLC, 31368–31372

Sentencing Commission, United States
See United States Sentencing Commission

Small Business Administration
NOTICES
Agency Information Collection Activities; Proposals, Submissions, and Approvals, 31375

Social Security Administration
NOTICES
Social Security Rulings:
Evaluating Diabetes Mellitus, 31375–31380
Evaluating Endocrine Disorders Other Than Diabetes Mellitus, 31380–31385

State Department
NOTICES
Agency Information Collection Activities; Proposals, Submissions, and Approvals:
Nonimmigrant Visa Application, 31385

Substance Abuse and Mental Health Services Administration
NOTICES
Agency Information Collection Activities; Proposals, Submissions, and Approvals, 31342–31344

Transportation Department
See Federal Aviation Administration
See Federal Highway Administration
See Federal Railroad Administration
See Federal Transit Administration
See Maritime Administration
See Pipeline and Hazardous Materials Safety Administration

Treasury Department
See Comptroller of the Currency
See Internal Revenue Service

U.S. Customs and Border Protection
NOTICES
Agency Information Collection Activities; Proposals, Submissions, and Approvals:
Entry of Articles for Exhibition, 31344
Distribution of Continued Dumping and Subsidy Offset to Affected Domestic Producers, 31414–31563

U.S.–China Economic and Security Review Commission
NOTICES
Public Hearings, 31408–31409

United States Sentencing Commission
NOTICES
Proposed Priorities for Amendment Cycle, 31409–31410
Requests for Nominations:
Practitioners Advisory Group, 31411

Victims Advisory Group, 31410–31411

Separate Parts In This Issue

Part II
Homeland Security Department, U.S. Customs and Border Protection, 31414–31563

Part III
Environmental Protection Agency, 31566–31782

Part IV
Transportation Department, Federal Highway Administration, 31784–31841
Transportation Department, Federal Transit Administration, 31784–31841

Reader Aids

Consult the Reader Aids section at the end of this page for phone numbers, online resources, finding aids, reminders, and notice of recently enacted public laws.

To subscribe to the Federal Register Table of Contents LISTSERV electronic mailing list, go to http://listserv.access.gpo.gov and select Online mailing list archives, FEDREGTOC-L, Join or leave the list (or change settings); then follow the instructions.

CFR PARTS AFFECTED IN THIS ISSUE

A cumulative list of the parts affected this month can be found in the Reader Aids section at the end of this issue.

14 CFR

Proposed Rules:

39 (3 documents) 31229, 31231, 31233

71 31236

17 CFR

Proposed Rules:

1 31238

21 CFR

878 31205

23 CFR

450 31214

Proposed Rules:

450 31784

26 CFR

31 31219

33 CFR

165 31220

40 CFR

Ch. I 31566

47 CFR

Proposed Rules:

1 31247

2 31247

90 31247

95 31247

96 31247

49 CFR

613 31214

Proposed Rules:

613 31784

50 CFR

224 31222

635 31227

Rules and Regulations

Federal Register
Vol. 79, No. 105
Monday, June 2, 2014

This section of the FEDERAL REGISTER contains regulatory documents having general applicability and legal effect, most of which are keyed to and codified in the Code of Federal Regulations, which is published under 50 titles pursuant to 44 U.S.C. 1510.

The Code of Federal Regulations is sold by the Superintendent of Documents. Prices of new books are listed in the first FEDERAL REGISTER issue of each week.

DEPARTMENT OF HEALTH AND HUMAN SERVICES

Food and Drug Administration

21 CFR Part 878

[Docket No. FDA–2013–N–0461]

General and Plastic Surgery Devices: Reclassification of Ultraviolet Lamps for Tanning, Henceforth To Be Known as Sunlamp Products and Ultraviolet Lamps Intended for Use in Sunlamp Products

AGENCY: Food and Drug Administration, HHS.

ACTION: Final Order.

SUMMARY: The Food and Drug Administration (FDA or the Agency) is reclassifying ultraviolet (UV) lamps intended to tan the skin from class I (general controls) exempt from premarket notification to class II (special controls) and subject to premarket notification, and renaming them sunlamp products and UV lamps intended for use in sunlamp products. FDA is designating special controls that are necessary to provide a reasonable assurance of safety and effectiveness of the device. FDA is reclassifying this device on its own initiative based on new information.

DATES: This order is effective September 2, 2014. See further discussion in section V ''Implementation Strategy'' for compliance dates.

FOR FURTHER INFORMATION CONTACT: Neil R.P. Ogden, Center for Devices and Radiological Health, Food and Drug Administration, 10903 New Hampshire Ave., Bldg. 66, Rm.1438, Silver Spring, MD 20993–0002, 301–796–6397.

SUPPLEMENTARY INFORMATION:

I. Background—Regulatory Authorities

The Federal Food, Drug, and Cosmetic Act (the FD&C Act) establishes a comprehensive system for the regulation of medical devices intended for human use. Section 513 of the FD&C Act (21 U.S.C. 360c) established three categories (classes) of devices, reflecting the regulatory controls needed to provide reasonable assurance of their safety and effectiveness. The three categories of devices are class I (general controls), class II (special controls), and class III (premarket approval). One type of general control provided by the FD&C Act is a restriction on the sale, distribution, or use of a device under section 520(e) of the FD&C Act (21 U.S.C. 360j(e)). A restriction under section 520(e) must be implemented through rulemaking procedures, rather than through the administrative order procedures that apply to this reclassification under section 513(e) of the FD&C Act, as amended by the Food and Drug Administration Safety and Innovation Act (FDASIA) (Pub. L. 112–144).

Under section 513 of the FD&C Act, devices that were in commercial distribution before the enactment of the 1976 amendments, May 28, 1976 (generally referred to as preamendments devices), are classified after FDA has: (1) Received a recommendation from a device classification panel (an FDA advisory committee); (2) published the panel's recommendation for comment, along with a proposed regulation classifying the device; and (3) published a final regulation classifying the device. Applying these procedures, FDA has classified most preamendments device types.

Devices that were not in commercial distribution prior to May 28, 1976 (generally referred to as postamendments devices), are automatically classified under section 513(f)(1) of the FD&C Act into class III without any FDA rulemaking process. Those devices remain in class III and require premarket approval unless, and until, the device is classified or reclassified into class I or II under section 513(f)(2) or (f)(3) of the FD&C Act or FDA issues an order finding the device to be substantially equivalent, in accordance with section 513(i) of the FD&C Act, to a predicate device that does not require premarket approval. The Agency determines whether new devices are substantially equivalent to predicate devices by means of premarket notification procedures in section 510(k) of the FD&C Act (21 U.S.C. 360(k)) and part 807 (21 CFR part 807).

On July 9, 2012, Congress enacted FDASIA. Section 608(a) of FDASIA amended the device reclassification procedures under section 513(e) of the FD&C Act, changing the process from rulemaking to an administrative order. Prior to the issuance of a final order reclassifying a device, the following must occur: (1) Publication of a proposed order in the **Federal Register**; (2) a meeting of a device classification panel described in section 513(b) of the FD&C Act; and (3) consideration of comments to a public docket. The proposed reclassification order must set forth the proposed reclassification and a substantive summary of the valid scientific evidence concerning the proposed reclassification, including the public health benefits of the use of the device, and the nature and incidence (if known) of the risk of the device. (See section 513(e)(1)(A)(i) of the FD&C Act.) FDA issued a proposed reclassification order for the devices that are the subject of this final reclassification order on May 9, 2013 (78 FR 27117).

Section 513(e) provides that FDA may, by administrative order, reclassify a device based upon ''new information.'' FDA can initiate a reclassification under section 513(e) of the FD&C Act or an interested person may petition FDA. The term ''new information,'' as used in section 513(e) of the FD&C Act, includes information developed as a result of a reevaluation of the data before the Agency when the device was originally classified, as well as information not presented, not available, or not developed at that time. (See, e.g., *Holland-Rantos Co.* v. *United States Department of Health, Education, and Welfare,* 587 F.2d 1173, 1174 n.1 (D.C. Cir. 1978); *Upjohn* v. *Finch,* 422 F.2d 944 (6th Cir. 1970); *Bell* v. *Goddard,* 366 F.2d 177 (7th Cir. 1966).) Whether data before the Agency are old or new data, the ''new information'' to support reclassification under section 513(e) must be ''valid scientific evidence,'' as defined in 21 CFR 860.7(c)(2). (See, e.g., *Gen. Medical Co.* v. *FDA,* 770 F.2d 214 (D.C. Cir. 1985); *Contact Lens Mfrs. Assoc.* v. *FDA,* 766 F.2d 592 (D.C. Cir. 1985), cert. denied, 474 U.S. 1062 (1986).)

FDA also regulates electronic products, including sunlamp products

and UV lamps intended for use in sunlamp products, under chapter 5, subchapter C of the FD&C Act (21 U.S.C. 360hh *et seq.*). Under these provisions, FDA administers an electronic product radiation control program to protect the public health and safety. This authority provides for developing, amending, and administering radiation safety performance standards for electronic products. Sunlamp products and UV lamps intended for use in sunlamp products are subject to the regulations for electronic product radiation control, including 21 CFR parts 1000 through 1010 and § 1040.20 (21 CFR 1040.20). The sunlamp products and UV lamps intended for use in sunlamp products performance standard in § 1040.20 was originally published in the **Federal Register** on November 9, 1979 (44 FR 65352). In the **Federal Register** of September 6, 1985 (50 FR 36548), FDA amended § 1040.20 and made it applicable to all sunlamp products and UV lamps intended for use in sunlamp products manufactured on or after September 8, 1986. FDA plans to propose amendments to this performance standard to reflect current scientific knowledge related to sunlamp product and UV lamp use, harmonize it more closely with International Electrotechnical Commission (IEC) International Standard 60335–2–27, Ed. 5.0: 2009–12, and strengthen the warning statement required by § 1040.20(d)(1)(i), in accordance with the results of the study FDA conducted under section 230 of the Food and Drug Administration Amendments Act of 2007 (Pub. L. 110–85).

II. Public Comments in Response to the Proposed Order

FDA received over 2,500 comments in response to the proposed order. Many of these comments supported the proposal. The comments that expressed concerns raised many of the same issues as one another. The comments can be categorized in the following six areas: (1) Terminology and definitions, (2) procedural aspects of the classification, (3) 510(k) notification, (4) special controls, (5) underlying science, and (6) miscellaneous comments. To make it easier to identify comments and our response to the comments, the word ''Comment'' appears before the description of the comment, and the word ''Response'' appears before our response. We have also numbered each comment to make it easier to identify a particular comment. The number assigned to each comment is purely for organizational purposes and does not signify the comment's value or importance or the order in which it was submitted.

A. Terminology and Definitions

(Comment 1) Why is the Agency using such a broad interpretation of the term ''sunlamp product'' that includes sunlamp products and UV lamps? The Agency's treatment of these products as a single class of product is inconsistent with the performance standard at § 1040.20, which identifies them as distinct products. By treating them as a single class of product, FDA is ignoring differences in physical characteristics between these products.

(Response 1) Prior to this reclassification, UV lamps intended to tan the skin and sunlamp products incorporating UV lamps were regulated together under the same classification regulation, § 878.4635 (21 CFR 878.4635), as class I 510(k)-exempt devices (subject to the limitations in 21 CFR 878.9, *Limitations of exemptions from section 510(k) of the Federal Food, Drug, and Cosmetic Act*). Manufacturers appear to have understood that this classification included both sunlamp products and UV lamps, since they have been listing both products under the same product code in the Agency's Registration and Listing database.[1]

In the proposed reclassification order, FDA proposed to rename the classification regulation from ''ultraviolet lamps for tanning'' to ''sunlamp products,'' but after considering comments submitted in response to the proposed order, FDA believes the proposed renaming would not be sufficiently clear in its inclusion of both sunlamp products and UV lamps intended for use in sunlamp products. Thus, in this final order, FDA has renamed the regulation and revised the definition of the product in § 878.4635(a) to more clearly indicate that the regulation includes both sunlamp products and UV lamps intended for use in sunlamp products. This language is consistent with the terminology used in the performance standard for these products in § 1040.20.

FDA acknowledges that there are differences between sunlamp products and UV lamps intended for use in sunlamp products, and so has made clear in this final order that certain labeling requirements (see § 878.4635(b)(6)(i)) apply only to sunlamp products whereas other labeling requirements (see § 878.4635(b)(6)(ii)) apply to both sunlamp products and and UV lamps intended for use in sunlamp products. Further, FDA is requiring that the labeling special control at § 878.4635(b)(6)(i)(A) be placed in a black box. For devices that have significant risks that would make the devices unsafe if used inappropriately, FDA may require that the risks be explained in warning statements placed in a black box that is displayed prominently in the labeling to ensure awareness by the end user. In conjunction with other regulatory controls, awareness of these important risks by the end user enables these devices to be used safely. In this case, a prominent black box warning that identifies individuals who should not use the device is necessary to allow sunlamp products to be used safely.

B. Procedural Aspects of Classification

(Comment 2) The proposed order cites several studies that were published subsequent to the March 2010 General and Plastic Surgery Advisory Panel (the ''panel''), underscoring the evolving science in this space. By not convening a new panel, is the Agency denying stakeholders a fair opportunity to address the methodology or other concerns related to studies on which the Agency is relying to take this action? Further, by failing to convene a panel, is the Agency failing to rely on up-to-date medical research?

(Response 2) The 2010 panel considered all relevant scientific issues associated with sunlamp products and UV lamps intended for use in sunlamp products and recommended upclassifying these devices. FDA is not aware of any significant changes in benefits or risks relating to sunlamp products and UV lamps intended for use in sunlamp products that have been identified in the scientific literature since the 2010 panel meeting. The articles published since that meeting offer further support for the panel's recommendation.

Of the 53 references cited in the proposed order, only 4 are scientific articles published after the 2010 panel. Although these four articles were published after the panel met to discuss reclassification of sunlamp products and UV lamps intended for use in sunlamp products, the substance therein is not ''new'' as it relates to issues considered at the 2010 panel. Specifically:

- Although Reference 1 (Reference 15 in the proposed order) was published after the panel meeting, its conclusion—that users with a history of melanoma are at an increased risk for melanoma reoccurrence—is also discussed in research published in 2006 by

[1] See *http://www.accessdata.fda.gov/scripts/cdrh/cfdocs/cfrl/rl.cfm* product code LEJ.

Freedman, et al. (Ref. 2), which was known at the time of the panel meeting.

• References 3 and 4 (References 18 and 19 in the proposed order) discuss the effects of tanning in childhood and early adult life, which were discussed extensively by the panel. Some panel members favored an age restriction for indoor tanning (i.e., individuals under a certain age would not be permitted to use sunlamp products and UV lamps intended for use in sunlamp products) and thought that the cutoff age should be 18.

• As discussed in the proposed order, Reference 5 (Reference 28 in the proposed order) showed that, despite protective measures instituted in commercial tanning facilities, 66 percent of female college-age users reported skin erythema from indoor tanning, and these users reported one episode of sunburn out of every five tanning sessions. These findings are consistent with an earlier report (Ref. 6) (Reference 29 in the proposed order) published in 2009 that showed that 58 percent of adolescent indoor tanners had experienced sunburns from exposure to sunlamp products and UV lamps intended for use in sunlamp products.

Stakeholders had an opportunity to raise concerns relating to the underlying methodology of any studies FDA relied on in the proposed order in their comments on that proposed order. We have addressed such comments in the subsection ''*E. Underlying Science*'' in this document.

(Comment 3) Using a panel meeting that took place prior to the issuance of the proposed reclassification order violates the sequence of events for issuing an administrative order to change the classification of a device as prescribed by section 513(e) of the FD&C Act, as amended by FDASIA.

(Response 3) The process followed by FDA in reclassifying these devices is in accordance with the applicable statutory provisions, which were recently amended by FDASIA. Section 608 of FDASIA amended section 513(e) of the FD&C Act by changing the reclassification process from rulemaking to an administrative order process. The amendments to section 513(e) of the FD&C Act made by FDASIA, require, in relevant part, that issuance of an administrative order reclassifying a device be preceded by a proposed order and a meeting of a device classification panel.

As amended, this section of the FD&C Act does not prescribe when these two events (the panel meeting and proposed order) must occur in relation to each other. Therefore, this provision provides the Agency with the flexibility to hold a panel meeting either before or after the issuance of a proposed reclassification order. This approach is consistent with the prior panel provision in section 513(e), which provided for FDA, at its discretion, to secure a panel recommendation prior to the promulgation of a reclassification rule and reflects longstanding practice. Indeed, prior to FDASIA, when a panel meeting was discretionary, FDA often held a panel meeting prior to proposing reclassification of a device, for example, when the Agency determined that a recommendation from the panel would help inform whether proposing reclassification for the device was appropriate. FDA believes its interpretation of section 513(e), as amended by FDASIA, is reasonable and allows the Agency to carry out the reclassification of devices in the most efficient and effective manner for the Agency and all stakeholders.

FDA believes the panel's deliberations and recommendations from the meeting held in March 2010 concerning potential changes to the current classification or regulatory controls for sunlamp products and UV lamps intended for use in sunlamp products remain relevant and fully satisfy the requirements in section 513(e) of the FD&C Act. As explained in the proposed reclassification order (Ref. 7), ''No significant changes in risks relating to [sunlamp products and UV lamps intended for use in sunlamp products] have been identified in the scientific literature since the 2010 panel meeting; the same risks identified prior to the 2010 panel meeting continue to be presented in literature.'' Therefore, convening another panel meeting on the reclassification of sunlamp products and UV lamps intended for use in sunlamp products would be unnecessarily duplicative and an inefficient use of the time and resources of all relevant parties.

(Comment 4) Comments were submitted to the record in connection with the 2010 panel meeting, including a scientific critique of the scientific papers on which FDA had relied. FDA's proposed order fails to address or discuss the scientific submissions made by the stakeholders. Did FDA take these submissions into account, and, if so, how were they addressed in the proposed order?

(Response 4) Stakeholders submitted 139 comments to the docket for the 2010 panel meeting (Docket No. FDA–2009–N–0606). Although FDA's proposed order does not directly discuss each specific comment, the Agency did review and consider all received comments in the development of its proposed reclassification of sunlamp products and ultraviolet lamps intended for use in sunlamp products. The proposed order includes the following summary of the comments ''The majority of the input received via the open public docket supported strengthening FDA's regulation of these devices. Although many comments did not expressly specify whether regulation of sunlamps should be strengthened or not, because most of these were related to the experiences of people with melanoma, FDA interpreted them to be in support of stricter regulation of sunlamps. Six comments of 139 total comments took the position that FDA should not change its current regulation of indoor tanning devices. Overall, the docket comments strongly paralleled the opinions of the panel members (Ref. 7).''

FDA considered not only the comments received in the docket to the 2010 panel meeting, but also relevant scientific literature, both in favor of and against the use of sunlamp products. As required by section 513(e) of the FD&C Act, as amended by FDASIA, the proposed order provided a substantive summary of the valid scientific evidence concerning the proposed reclassification of the device, including the available information on the benefits of use of sunlamp products, as well as the risks to health from use of these products. The proposed order also called for comments from any interested stakeholders. The comment period on the proposed order closed on August 7, 2013. All comments received were considered by the Agency prior to development of this final reclassification order.

(Comment 5) The 2010 panel was not representative of industry and certain members of the panel had a conflict of interest because they were partnered with the American Academy of Dermatology (AAD).

(Response 5) Advisory committees provide FDA with independent advice from outside experts. FDA's advisory committee program is governed by a number of Federal laws and regulations that set forth standards for convening advisory committees and reviewing potential conflicts of interest. FDA remains committed to ensuring that its advisory committee process is conducted according to applicable statutes and regulations and consistent with relevant FDA guidance. These laws, regulations, and guidance documents are available on our Web site, and provide ready access to the statutory and regulatory framework that FDA advisory committees operate

within and describe the steps that FDA has taken to enhance decisionmaking, increase transparency, and strengthen public confidence in our advisory committee program.

FDA disagrees with the comment that the composition of the 2010 panel was flawed. A copy of the panel roster can be found at the FDA's Web site (Ref. 8). The 2010 panel members were screened for potential or actual conflicts of interest in accordance with legal requirements and consistent with FDA guidance, and were cleared by the Agency to participate at the meeting.[2] As indicated on the panel roster, there was a consumer representative, an industry representative, and a patient representative on the 16-person panel.

(Comment 6) Prior to the 2012 enactment of FDASIA, classifications under section 513(e) of the FD&C Act were governed by the Federal rulemaking process requiring economic analysis of any proposed regulations. At any time after the Agency commenced its reclassification efforts with respect to sunlamp products and UV lamps intended for use in sunlamp products in 2009, did the Agency undertake any formal or informal economic analysis of possible changes to the regulation of this product?

(Response 6) The Federal rulemaking process requires economic analysis of proposed rules under Executive Order 12866. Section 608 of FDASIA amended section 513(e) of the FD&C Act by changing the reclassification process from rulemaking to an administrative order process. This order process is not subject to Executive Order 12866. Therefore, although the Agency considered the impact on stakeholders and the least burdensome method to secure a reasonable assurance of safety and effectiveness for sunlamp products and UV lamps intended for use in sunlamp products, the Agency has not conducted an economic analysis for reclassification of these devices.

FDA did consider the impact that this reclassification may have on small businesses and has decided to employ a staged implementation plan to minimize the burden on affected entities. Small businesses play an important role in the medical device industry and are responsible for more than half of all medical devices under development, including sunlamp products and UV lamps intended for use in sunlamp products. Given this role, FDA recognizes how critical it is that small firms understand the regulatory landscape in order to meet regulatory requirements for marketing. The Division of Industry and Consumer Education (DICE) in the Center for Devices and Radiological Health (CDRH) is dedicated to helping small businesses successfully navigate the Agency's device approval and clearance processes. In addition, small businesses may qualify for substantially discounted user fees—a 510(k) submission fee for a small business in FY 2014 is $2,585, which is half the standard 510(k) submission fee.

(Comment 7) Because FDA has not disclosed what the Agency will ultimately require under amendments to § 1040.20, industry cannot adequately comment on the proposed reclassification order.

(Response 7) Manufacturers must comply with the requirements set forth in § 1040.20. If, in the future, § 1040.20 is updated, as FDA has announced its intent to do, it will be done through its own notice and comment rulemaking process and stakeholders will be provided the opportunity to comment during that process.

(Comment 8) FDA should update the requirements in § 1040.20 prior to the implementation of this reclassification because 510(k)s for these products that are submitted prior to the performance standard amendments would not necessarily comply with the performance standard and could require manufacturers to have to submit additional 510(k)s for their products.

(Response 8) With respect to § 1040.20, manufacturers must comply with the performance standard in effect at the time of the 510(k) submission. If the performance standard is amended, manufacturers would not need to submit a new 510(k) unless there are significant changes to the device that trigger the need for a new 510(k) submission under 21 CFR 807.81(a)(3) (see FDA's guidance ''Deciding When to Submit a 510(k) for a Change to an Existing Device'' (*http://www.fda.gov/MedicalDevices/DeviceRegulationandGuidance/GuidanceDocuments/ucm080235.htm*)).

C. 510(k) Notification

(Comment 9) Has FDA conducted any analysis of the increased resources it will need to enforce these new regulations, including the demands placed on the Agency to review 510(k) premarket notifications?

(Response 9) A review of FDA's Establishment Registration and Device Listing database, which identifies, among other things, manufacturers that are registered to market medical devices and the devices that they currently market, shows that there are approximately 25 firms registered as sunlamp product manufacturers or manufacturers of UV lamps intended for use in sunlamps products. To continue offering these devices for sale, a 510(k) must be submitted by August 26, 2015, (see further discussion in section V ''Implementation Strategy''). Thus, FDA expects to receive approximately 25 510(k) submissions within this timeframe (and potentially a few other 510(k) submissions for new sunlamp products and UV lamps intended for use in sunlamp products). FDA typically receives and reviews approximately 4,000 510(k) submissions each year, so the Agency does not expect the reclassification of sunlamp products and UV lamps intended for use in sunlamp products to significantly affect review times or resources.

As a part of the Medical Device User Fee Amendments of 2012, or MDUFA III, FDA committed to meeting certain review times for 510(k) submissions. FDA's current review goal for 510(k) submissions is to make a substantial equivalence determination within 90 days of active FDA review. The latest published review data from January 29, 2014, shows that FDA has met its review goal for 100 percent of the 510(k) submissions received in fiscal year 2014, to date. FDA expects to meet these review goals for any 510(k) submission for sunlamp products or UV lamps intended for use in sunlamp products (Ref. 9).

(Comment 10) Can the Agency clarify by when it expects manufacturers to submit a 510(k) notification for products already being offered for sale, and whether those products can continue to be offered for sale after submission of the 510(k) notification but prior to Agency clearance?

(Response 10) Manufacturers of sunlamp products or UV lamps intended for use in sunlamp products that are offered for sale prior to September 2, 2014, must submit a 510(k) and comply with the labeling special controls established in this final order by August 26, 2015, which is 15 months from the date of publication of this final order (see section V ''Implementation Strategy'') for any device they wish to continue offering for sale. Manufacturers can continue offering these products for sale while FDA reviews the 510(k) submissions. However, if a 510(k) is not submitted or the device is not in compliance with the labeling special controls by this date, or if FDA determines after review of the 510(k) that the device is not substantially equivalent to a legally marketed predicate device or the device is not in compliance with the labeling

[2] See *http://www.fda.gov/downloads/RegulatoryInformation/Guidances/UCM125646.pdf.*

or other special controls, the device, including individual devices already in use, would be adulterated and misbranded under sections 501(f)(1)(B) and 502(o) of the FD&C Act, and the manufacturer would have to cease offering the device for sale.

(Comment 11) The proposed order is silent on the status of products that are already on the market for which the manufacturer is no longer in business or for which it is not economically viable for the manufacturer to incur the costs associated with submitting a 510(k).

(Response 11) Individual sunlamp products that have already been sold to end users prior to September 2, 2014, the model of which has been discontinued or is otherwise no longer marketed after this date, do not have to have 510(k)s or comply with the non-labeling special controls, but they must comply with the labeling special controls at § 878.4635(b)(6)(i)(A) by August 26, 2015. If the manufacturer is no longer in business, sunlamp product owners would have to apply the required labeling to sunlamp products to keep these devices in compliance with the labeling requirements.

(Comment 12) Is one 510(k) required for a ''sunlamp product,'' which by definition includes a fixture and UV lamp, or are separate 510(k)s required for the sunlamp product and UV lamp? Similarly, if UV lamps are sold with a sunlamp product and on their own, do multiple 510(k)s need to be submitted?

(Response 12) In this final order, FDA has revised the classification identification to expressly include ''sunlamp products'' and ''UV lamps intended for use in sunlamp products'' and has included revised definitions of these devices, as discussed in response to Comment 1. A 510(k) submission is required for sunlamp products and for UV lamps intended for use in sunlamp products. If a UV lamp intended for use in a sunlamp product is sold with a sunlamp product or they are sold separately from one another, then both devices can be included in the same 510(k) submission. For more information on this issue, please see FDA Guidance, ''Bundling Multiple Devices or Multiple Indications in a Single Submission,'' available at *http://www.fda.gov/medicaldevices/deviceregulationandguidance/guidancedocuments/ucm089731.htm*.

(Comment 13) If FDA is requiring that UV lamp manufacturers submit 510(k)s for their lamps, are lamp manufacturers required to submit separate 510(k)s for use of their lamps in each tanning bed or booth? Or, can UV lamp manufacturers that are required to submit 510(k)s for their lamps do so without referencing use of the lamp with a particular tanning bed or booth? Is a replacement UV lamp manufacturer required to submit a separate 510(k) for use of each replacement lamp type in each possible tanning bed or tanning booth in which the replacement lamp could conceivably be used?

(Response 13) Manufacturers of UV lamps that submit a 510(k) do not need to submit a separate 510(k) for use of each replacement lamp type in each possible tanning bed or tanning booth in which the replacement lamp could conceivably be used, but they should specify in their 510(k) submission the design characteristics of the sunlamp product with which the lamp is compatible.

(Comment 14) If FDA is requiring that all UV lamp manufacturers, including replacement lamp manufacturers, submit 510(k)s, is a manufacturer of replacement UV lamps required to submit a separate 510(k) for each of its lamp types? Will the Agency accept 510(k)s for lamp model families?

(Response 14) Instead of submitting separate 510(k)s for different lamp types, a manufacturer can submit a ''bundled'' 510(k) for related lamps. For more information on this issue, please see FDA Guidance, ''Bundling Multiple Devices or Multiple Indications in a Single Submission,'' available at *http://www.fda.gov/medicaldevices/deviceregulationandguidance/guidancedocuments/ucm089731.htm*.

(Comment 15) Sunlamp product and UV lamp manufacturers are aware of cleared 510(k)s for ''UV lamps for tanning,'' but at least some of these 510(k)s are over 20 years old. Over the past 20 years, sunlamp products and UV lamps have improved substantially with regard to performance and safety. Sunlamp product and UV lamp manufacturers are uncertain how to show substantial equivalence to one of the 20-year-old sunlamp products or UV lamps given these significant improvements.

(Response 15) FDA will find a contemporary sunlamp product or UV lamp intended for use in a sunlamp product to be substantially equivalent to a predicate device if the contemporary device: (1) Has the same intended use as the predicate device and (2) has the same technological characteristics as the predicate device or has different technological characteristics but is at least as safe and effective as the predicate device and does not raise new questions of safety or effectiveness. If the device has different technological characteristics from the predicate device, the 510(k) submission must include a summary of how the technological characteristics of the device compare to a legally marketed predicate device (21 CFR 807.92(a)(6)). In addition to showing substantial equivalence, manufacturers of new sunlamp products will need to show compliance with the special controls required under this order.

(Comment 16) FDA should ''grandfather'' in all currently legally marketed sunlamp products, such that they would not be subject to the requirements set forth in this order. Moreover, these products should be allowed to be used as predicate devices as long as the manufacturers provide adequate documentation that the products meet all requirements necessary for a 510(k) submission.

(Response 16) Manufacturers of sunlamp products or UV lamps intended for use in sunlamp products that are offered for sale prior to September 2, 2014, are required to submit 510(k)s and must comply with the labeling special controls by August 26, 2015, for any device they wish to continue offering for sale. Any sunlamp product or UV lamp intended for use in a sunlamp product legally marketed on or before September 2, 2014, including both 510(k)-cleared and 510(k)-exempt devices, can be used as a predicate device in a 510(k). A 510(k) for such a device must demonstrate that the device was legally offered for sale on or before September 2, 2014, and it must comply with the special controls.

D. Special Controls

(Comment 17) Many of the proposed special controls are either unrelated to UV lamps intended to be used with sunlamp products or are impossible for UV lamp manufacturers to achieve without involvement of a tanning bed or tanning booth. For example, UV lamps do not come into contact with indoor tanners due to safety issues associated with heat generation and possible lamp breakage. Given this, how would UV lamp manufacturers conduct biocompatibility testing or comply with some of the other special controls that may apply only to sunlamp products?

(Response 17) If a certain non-labeling special control does not, as a practical matter, apply to a device due to the device's nature or design, manufacturers may meet such special control by explaining such practical inapplicability in their 510(k) submission to FDA. For example, biocompatibility testing would not apply to a UV lamp that does not contact the human body and the software verification requirement would not apply to a UV lamp that does not employ software. As long as FDA finds such justification acceptable, the

manufacturer would not have to conduct or submit any testing that would otherwise be required by that particular special control. FDA has chosen this flexible approach, as opposed to assigning certain special controls to certain types of sunlamp products and UV lamps intended for use in sunlamp products, to account for ever-changing technology in this area.

(Comment 18) FDA's proposed reclassification order would require that certain warning labeling appear on ''sunlamp product fixtures.'' Given that FDA specifies that the warning must appear on ''sunlamp product fixtures,'' does this special control apply to UV lamps?

(Response 18) Based on comments we received, we have clarified the applicability of the labeling requirements in the final order. The labeling in § 878.4635(b)(6)(i) pertains only to sunlamp products while the labeling in § 878.4635(b)(6)(ii) pertains to sunlamp products and UV lamps intended for use in sunlamp products. This means that sunlamp products must comply with the requirements in § 878.4635(b)(6)(i) and (b)(6)(ii), while UV lamps intended for use in sunlamp products must comply with § 878.4635(b)(6)(ii) and not with § 878.4635(b)(6)(i).

(Comment 19) A font height of 10 millimeters (mm) is too small for the labeling prescribed in proposed § 878.4635(b)(6)(i).

(Response 19) FDA believes 10 mm is sufficient height to attract attention and warn prospective users that individuals under age 18 should not use the device. Ten mm is a minimum; labels are permitted to display font greater than 10 mm.

E. Underlying Science

(Comment 20) The recent information cited by FDA in the proposed reclassification order is comprised solely of recent reviews of information that has been available for several years, and this information does not compel a change to the current classification or performance standards.

(Response 20) The articles referenced in the proposed order qualify as ''new information'' under section 513(e) of the FD&C Act. The term ''new information,'' as used in section 513(e) of the FD&C Act, includes information developed as a result of a reevaluation of the data before the Agency when the device was originally classified, as well as information not presented, not available, or not developed at that time. (See, e.g., *Holland-Rantos Co.* v. *United States Department of Health, Education, and Welfare,* 587 F.2d 1173, 1174 n.1 (D.C. Cir. 1978); *Upjohn* v. *Finch,* 422 F.2d 944 (6th Cir. 1970); *Bell* v. *Goddard,* 366 F.2d 177 (7th Cir. 1966).). The sources cited in the proposed reclassification order are all encompassed by this definition and reveal, among other things, that UV radiation is a significant contributing factor in developing skin cancer, that the number of females exposed to indoor UV radiation who are diagnosed with skin cancer is increasing, and that individuals under 18 who are exposed to UV radiation are at an increased risk of developing skin cancer. As stated in the proposed order, the cumulative effects of UV radiation exposure have been linked to higher incidence of skin cancer (Ref. 10). Moreover, individuals under 18 are particularly vulnerable to the damaging effect of UV radiation. According to a 2008 article recommending an age restriction to prevent sunlamp product use in children and teenagers, a number of biological factors are identified as potentially causing the increase in the risk of developing melanoma from exposure to sunlamps during those years (Ref. 11). These findings have compelled a change in how FDA regulates these devices.

(Comment 21) Sunlamp products can stimulate the body to produce vitamin D. In addition to bone problems and increased cancer risk, vitamin D deficiency has been linked to a heightened risk of Type 1 diabetes, multiple sclerosis and other autoimmune diseases, infectious diseases such as influenza and tuberculosis, and high blood pressure. For these reasons, additional regulation of sunlamp products is not appropriate.

(Response 21) FDA agrees that vitamin D is critical for the body's health. In the proposed order, FDA acknowledged that UV radiation stimulates the body's production of vitamin D, however, there are safer alternatives to obtain vitamin D other than the use of sunlamp products and UV lamps intended to be used in sunlamp products, for example, through an individual's diet (Ref. 12). As stated previously, FDA believes that additional regulation is necessary to provide a reasonable assurance of safety and effectiveness of these devices.

(Comment 22) FDA should not rely on the International Agency for Research on Cancer's (IARC) study (Ref. 13) to support this reclassification because that study included outdoor sun exposure and dermatology exposure, which confounded the data and exaggerated the effects of UV radiation.

(Response 22) As with most indoor tanning risk studies, it can be difficult to discern for each subject the relative amounts of indoor and outdoor UV exposure. However, previous use of a sunlamp product and frequency of use can be assessed to determine relative risk of indoor tanning exposure. All of the studies analyzed in the IARC study focused on indoor tanning and melanoma as well as other skin cancers such as basal cell carcinoma and squamous cell carcinoma. FDA believes the IARC report's conclusions are applicable to indoor tanning.

(Comment 23) Even though women's use of indoor tanning devices has increased in recent years, SEER cancer incidence data shows that the incidence of melanoma has decreased from 5.0 in 1975–1982 to 2.3 in 1981–2010 in females (Ref. 14). This finding undermines the argument that indoor tanning causes melanoma.

(Response 23) The SEER incidence data referenced in the comment is incorrect. In the SEER data, an increase in the incidence of melanoma in females has been noted since 1975 and has not abated. The age adjusted rates of melanoma for females per 100,000 are as follows (Ref. 15):

TABLE 1

Year	SEER Melanoma incidence per 100,000 females
1975	7.44
1980	9.63
1985	11.16
1990	11.84
1995	13.81
2000	15.50
2005	18.41
2010	19.30

The increase in melanoma incidence among white females is even greater (Ref. 15):

TABLE 2

Year	SEER melanoma incidence per 100,000 white females
1975	8.21
1980	11.12
1985	12.70
1990	13.93
1995	16.47
2000	19.08
2005	23.14
2010	24.23

(Comment 24) The IARC report shows only a 1/10 of 1 percent increase in risk of melanoma. The IARC report clearly

states that epidemiologic studies do not support a consistent relationship between tanning and cancer.

(Response 24) FDA is unaware of the source of the 1/10 of 1 percent value referenced by the commenter. Rather, the IARC report identified a causal relationship between indoor tanning and melanoma risk based on evidence pertaining to the strength, consistency, dose-response and temporal sequence of the association of the use of sunlamp products with melanoma risk, and of the coherence and biologic plausibility of the association (Ref. 13). Additionally, the study found that first exposure to sunlamp products before age 35 increased the risk of melanoma by 75 percent compared to individuals that never used sunlamp products.

(Comment 25) The cause of melanoma is unknown, although most scientists believe the primary cause is genetic in nature. The personal risk factors for melanoma include red hair, extremely pale skin that will not tan, presence of moles and freckles on the body, and a family history of melanoma. Upclassifying these devices, and limiting exposure to UV radiation, is not necessary for those without a genetic predisposition to melanoma.

(Response 25) Although personal risk factors can also contribute to the risk for melanoma, there have been multiple studies which have found that sunlamp product use increases the risk of melanoma. Meta analyses by Gallagher et al. (Ref. 16), IARC (Ref. 13), and Boniol et al. (Ref. 17) have all found a link between sunlamp product use and melanoma.

(Comment 26) The literature is replete with conflicting information, including science suggesting that moderate, non-burning UV exposure reduces the risk of melanoma and that sunburn is the relevant exposure circumstance to be avoided, whether the UV comes from the sun or from a tanning bed, and whether the person is older or younger than 18. Sunburn prevention as the correct approach is supported by research showing that biologically, sunburn affects the skin differently when compared to non-burning UV exposure. Sunburning should be avoided, but moderate exposure by individuals—regardless of the user's age—is not risky.

(Response 26) As stated in FDA's proposed order to reclassify these devices, there is no evidence that moderate non-burning UV exposure or attaining a ''base tan'' provides any protection against premature aging of the skin or reduces the risk of skin cancer (Ref. 7). The Agency concurs with the comment that there are other risk factors for melanoma besides sunbed use.

(Comment 27) Dr. David G. Hoel, 1 of the 20 scientists that were called upon by the IARC in 2009 to reassess the carcinogenicity of all forms of radiation, has written a report stating that the 2006 IARC conclusion that there is a 75 percent increase in melanoma risk when tanning starts before age 35 is invalid. Dr. Hoel is preparing an article for publication on the subjects of melanoma, UV radiation, and the IARC report. The purpose of this article is to correct the many misconceptions about the science regarding UV radiation and melanoma that have been promoted by the AAD and other anti-tanning advocates. Dr. Hoel argues that the significant differences between regulatory standards in the United States and Europe with regard to use of sunlamp products make the predominantly European data in the IARC report an inappropriate basis for the FDA's decision to change the controls applicable to sunlamp products in the United States.

(Response 27) The paper alluded to has not been published or undergone peer review. Studies subsequent to the IARC study have corroborated that study's findings that there is a correlation between melanoma and sunlamp product use. For example, a meta-analysis employing data from numerous studies found an increased risk of melanoma with sunlamp product use (Ref. 17). Furthermore, this study noted that the magnitude of the increased risk was greater when sunlamp product use began earlier in life. In addition, Doré and Chignol observed that two studies in Minnesota and Australia found an increased risk of melanoma with indoor tanning (Ref. 18). They also observed a very large study of Norwegian and Swedish women that found an increased risk of melanoma with indoor tanning.

(Comment 28) After further analysis of the IARC report, Dr. Mia Papas and Dr. Anne Chappelle published a peer-reviewed report (Ref. 19) criticizing the IARC report for not differentiating among Medical Phototherapy Equipment, Unsupervised Home Equipment, and Commercial Tanning Salon Equipment. Their article indicates that there is no association between sunlamp product use and melanoma if you remove home use and medical use of sunlamp products from the analysis. Therefore, the report being used to support the reclassification is flawed.

(Response 28) This literature (Ref. 19) has not been published in a peer-reviewed journal, despite the commenter's assertion to the contrary. In the peer-reviewed journal ''Cancer Epidemiology, Biomarkers & Prevention,'' Gallagher et al. (Ref. 16) noted that the results from studies subsequent to the IARC report, taken together, do not differ in character from those seen in the earlier studies. During earlier studies, home use of sunlamp products was greater than it is now. During later studies, the proportion of the sunlamp product use at indoor tanning facilities increased greatly, but according to Gallagher et al. (Ref. 16), melanoma incidence did not markedly differ, supporting the conclusion that the risk from use of sunlamp products at tanning facilities does not differ markedly from the risks of home use of such devices.

(Comment 29) An article written by William Grant (Ref. 20) indicated that the 50 subjects in the IARC report were primarily skin type 1. Skin type 1 individuals have a natural increased risk to skin cancer and because tanning facilities do not tan skin type 1's, this skewed the data in the IARC report.

(Response 29) The Grant critique (Ref. 20) points out that fair skinned individuals are more likely than other individuals to develop skin cancer due to UV exposure. However, UV radiation exposure from indoor tanning use increases the risk of skin cancer regardless of whether individuals have high or low pigmentation (Ref. 21). For this reason, FDA has not changed its position regarding the link between sunlamp product use and skin cancer. It is also important to note that a significant portion of the U.S. population is skin type 1 and may use sunlamp products (Ref. 22).

F. Miscellaneous

(Comment 30) Unless tanning beds for home use are banned, this reclassification does not make sense.

(Response 30) The commenter did not provide a justification for this conclusion, so we are not completely clear as to the basis for this comment. However, we emphasize that the new 510(k) requirements and special controls (including labeling) set forth in this final order apply to all sunlamp products and UV lamps intended to be used in sunlamp products, including ones sold to individuals for home use. FDA believes that the regulatory controls set forth in this order are necessary to provide a reasonable assurance of safety and effectiveness for these devices.

(Comment 31) Regulated tanning facilities are a safer alternative than home tanning where there are no informed workers. Tanning facility

owners are trained and educated to protect clients who want to tan.

(Response 31) This final order does not distinguish between devices sold for use at home and devices sold to tanning facilities; the regulatory controls set forth in this order apply to both.

(Comment 32) People who have prescriptions for dermatological disorders will be burdened by this reclassification.

(Response 32) Devices prescribed for individuals with dermatological disorders have been and will continue to be regulated differently from devices regulated under § 878.4635. UV lamps for dermatological disorders have long been class II medical devices regulated under 21 CFR 878.4630 and are unaffected by this reclassification.

III. The Final Order

Under section 513(e) of the FD&C Act, FDA is adopting its findings as published in the preamble to the proposed order. FDA is issuing this final order to reclassify UV lamps used to tan the skin from class I (general controls) exempt from premarket notification to class II (special controls) and subject to premarket notification and rename them sunlamp products and UV lamps intended for use in sunlamp products.

IV. Premarket Notification

Class II devices are subject to the 510(k) premarket notification requirement unless exempted under section 510(m) of the FD&C Act. Under this reclassification, the Agency is not exempting these devices from premarket notification (510(k)) submission requirements as provided for under section 510(m) of the FD&C Act. The premarket notification requirement allows the Agency to review the technological characteristics, performance, intended use(s), and labeling of medical devices to ensure the devices are substantially equivalent to legally marketed predicate devices before they enter the market. Substantial equivalence requires that a new device must have: (1) The same intended use as legally marketed predicates and (2) either the same technological characteristics as a legally marketed predicate, or if there are significant differences, the differences must not raise new questions of safety and effectiveness and the performance data must demonstrate that the new device is at least as safe and effective as the legally marketed predicate device. (See section 513(i) of the FD&C Act.) This assures that new devices that differ significantly in terms of safety and effectiveness from predicate devices already legally on the market will be subject to the more rigorous premarket approval requirement.

FDA cleared several 510(k)s for sunlamp products prior to exempting the devices from premarket notification submission.[3] At least one 510(k) for a sunlamp product has been cleared since then under product code LEJ. These cleared sunlamp products, as well as any 510(k)-exempt sunlamp product or UV lamp intended for use in a sunlamp product legally offered for sale on or before September 2, 2014, can serve as predicates for substantial equivalence purposes.

V. Implementation Strategy

Based on comments on the proposed order regarding our implementation strategy, we are clarifying the compliance dates for the various requirements set forth in this final order. For additional information on this issue, see the **DATES** heading of this final order.

- Models of sunlamp products and UV lamps intended for use in sunlamp products that have not been offered for sale prior to September 2, 2014, or have been offered for sale but are required to submit a new 510(k) under § 807.81(a)(3) because the device is about to be significantly changed or modified:[4] Manufacturers must obtain 510(k) clearance before marketing the new or changed device.
- Models of sunlamp products and UV lamps intended for use in sunlamp products that have been offered for sale prior to September 2, 2014, and continue to be offered for sale after this date: Manufacturers must submit a 510(k) and comply with labeling special controls by August 26, 2015, for any device they wish to continue offering for sale. If a 510(k) is not submitted by this date or the device is not in compliance with the labeling special controls or if FDA determines after review of the 510(k) that either the device is not substantially equivalent to a legally marketed predicate or the device is not in compliance with the labeling or other special controls, the device model would be adulterated and misbranded, and offering the device for sale would have to cease.
- Individual sunlamp products that have been shipped to operators or users such as tanning facilities and individual consumers prior to September 2, 2014, the model of which has been discontinued or is otherwise no longer offered for sale: These devices must comply with the labeling special controls at § 878.4635(b)(6)(i)(A) by August 26, 2015. If the manufacturer is no longer in business, sunlamp product owners would have to apply the required labeling to keep these devices in compliance with the labeling requirements.

VI. Environmental Impact

The Agency has determined under 21 CFR 25.34(b) that this reclassification action is of a type that does not individually or cumulatively have a significant effect on the human environment. Therefore, neither an environmental assessment nor an environmental impact statement is required.

VII. Paperwork Reduction Act of 1995

This final order refers to currently approved collections of information found in FDA regulations. These collections of information are subject to review by the Office of Management and Budget (OMB) under the Paperwork Reduction Act of 1995 (the PRA) (44 U.S.C. 3501–3520). The collections of information in part 807, subpart E, have been approved under OMB control number 0910–0120 and the collections of information under 21 CFR part 801 have been approved under OMB control number 0910–0485.

In addition, FDA concludes that the labeling statements in § 878.4635(b)(6)(i)(A) and (b)(6)(ii)(A) through (b)(6)(ii)(D) do not constitute a ''collection of information'' under the PRA. Rather, the labeling statements are ''public disclosure of information originally supplied by the Federal Government to the recipient for the purpose of disclosure to the public.'' (5 CFR 1320.3 (c)(2)).

VIII. Codification of Orders

Prior to the amendments by FDASIA, section 513(e) provided for FDA to issue regulations to reclassify devices. Although section 513(e) as amended requires FDA to issue final orders rather than regulations, FDASIA also provides for FDA to revoke previously issued regulations by order. FDA will continue to codify classifications and reclassifications in the Code of Federal Regulations (CFR). Changes resulting from final orders will appear in the CFR as changes to codified classification determinations or as newly codified orders. Therefore, under section 513(e)(1)(A)(i) of the FD&C Act, as amended by FDASIA, in this final order, we are revoking the requirements in

[3] See 59 FR 63005 (December 7, 1994).

[4] See FDA's guidance, ''Deciding When to Submit a 510(k) for a Change to an Existing Device,'' (available at *http://www.fda.gov/MedicalDevices/DeviceRegulationandGuidance/GuidanceDocuments/ucm080235.htm*), for additional guidance on whether a device change or modification requires a 510(k) submission.

§ 878.4635 related to the classification of UV lamps for tanning as class I devices and codifying the reclassification of sunlamp products and UV lamps intended for use in sunlamp products into class II.

IX. References

FDA has placed the following references on display in the Division of Dockets Management (HFA–305), Food and Drug Administration, 5630 Fishers Lane, Rm. 1061, Rockville, MD 20852. Interested persons may see them between 9 a.m. and 4 p.m., Monday through Friday, and online at *http://www.regulations.gov*. (FDA has verified all the Web site addresses in this reference section, but we are not responsible for any subsequent changes to the Web sites after this document publishes in the **Federal Register**.)

1. Salama, A.K., N. de Rosa, R.P. Scheri, et al., ''Hazard-Rate Analysis and Patterns of Recurrence in Early Stage Melanoma: Moving Towards a Rationally Designed Surveillance Strategy,'' *PLoS One,* vol. 8, pp. e576–e665, 2013.
2. Freedman, D.B., B.A. Miller, and M.A. Tucker, ''New Malignancies Following Melanoma of Skin, Eye Melanoma, and Nonmelanoma Eye Cancer,'' *New Malignancies Among Cancer Survivors: SEER Cancer Registries, 1973–2000,* pp. 339–362, 2006.
3. Reed, K.B., J.D. Brewer, C.M. Lohse, et al., ''Increasing Incidence of Melanoma Among Young Adults: An Epidemiological Study in Olmsted County, Minnesota,'' *Mayo Clinic Proceedings,* vol. 87, pp. 328–334, 2012.
4. Cust, A.E., B.K. Armstrong, C. Goumas, et al., ''Sunbed Use During Adolescence and Early Adulthood Is Associated With Increased Risk of Early-Onset Melanoma,'' *International Journal of Cancer,* vol. 128, pp. 2425–2435, 2011.
5. Stapleton, J.L., J. Hillhouse, R. Turrisi, et al., ''Erythema and Ultraviolet Tanning: Findings From a Diary Study,'' *Translational Behavioral Medicine,* vol. 3, pp. 10–16, 2013.
6. Cokkinides, V., M. Weinstock, D. Lazovich, et al., ''Indoor Tanning Use Among Adolescents in the United States, 1998–2004,'' *Cancer,* vol. 115, pp. 190–198, 2009.
7. 78 FR 27117, May 9, 2013.
8. *http://www.fda.gov/downloads/AdvisoryCommittees/CommitteesMeetingMaterials/MedicalDevices/MedicalDevicesAdvisoryCommittee/GeneralandPlasticSurgeryDevicesPanel/UCM205686.pdf.*
9. *http://www.fda.gov/downloads/MedicalDevices/DeviceRegulationandGuidance/Overview/MedicalDeviceUserFeeandModernizationActMDUFMA/UCM383896.pdf.*
10. Sivamani, R.K., L.A. Crane, R.P. Dellavalle, et al.,'' The Benefits and Risks of Ultraviolet Tanning and Its Alternatives: The Role of Prudent Sun Exposure,'' *Dermatologic Clinics,* vol. 27, pp. 149–154, 2009.
11. Autier, P. and P. Boyle, ''Artificial Ultraviolet Sources and Skin Cancers: Rationale for Restricting Access to Sunbed Use Before 18 Years of Age,'' *Nature Clinical Practice Oncology,* vol. 5(4), pp. 178–179, 2008.
12. National Institutes of Health, Office of Dietary Supplements, ''Dietary Supplement Fact Sheet: Vitamin D'' (*http://ods.od.nih.gov/factsheets/VitaminD-HealthProfessional*).
13. ''IARC Working Group on Artificial Ultraviolet Light (UV) and Skin Cancer: The Association of Use of Sunbeds With Cutaneous Malignant Melanoma and Other Skin Cancers: A Systematic Review,'' *International Journal of Cancer,* vol. 120, pp. 1116–1122, 2006.
14. SEER Stat Fact Sheets: Melanoma of the Skin, *http://seer.cancer.gov/statfacts/html/melan.html#incidence-mortality.*
15. SEER Cancer Statistics Review 1975–2010, *http://seer.cancer.gov/csr/1975_2010/browse_csr.php?sectionSEL=16&pageSEL=sect_16_table.05.html.*
16. Gallagher, R.P., J.J. Spinelli, and T.K. Lee, ''Tanning Beds, Sunlamps, and Risk of Cutaneous Malignant Melanoma,'' *Cancer Epidemiology, Biomarkers & Prevention,* vol. 14(3), pp. 562–566, 2005.
17. Boniol, M., P. Autier, P. Boyle, et al., ''Cutaneous Melanoma Attributable to Sunbed Use: Systematic Review and Meta-Analysis,'' *British Medical Journal,* vol. 345, p. e4757 July 24, 2012.
18. Doré, J. and M.C. Chignol, ''Tanning Salons and Skin Cancer,'' *Photochemical & Photobiological Sciences,* vol. 11(1), pp. 30–37, 2012.
19. *http://www.google.com/url?sa=t&rct=j&q=&esrc=s&source=web&cd=1&ved=0CCkQFjAA&url=http%3A%2F%2Ftancanada.org%2Fwp-content%2Fuploads%2F2013%2F05%2Fsuntan_poster_4-final-Montreal.pdf&ei=u8B8U7iiFdbesATr7oGoCA&usg=AFQjCNFNmLHAAiGcthuPeFfKj94zhexEaw&sig2=IZO-wr4jPtD8ql5fvhV7Vg&bvm=bv.67229260,d.cWc&cad=rja.*
20. Grant, W.B., ''Critique of the International Agency for Research on Cancer's Meta-Analyses of the Association of Sunbed Use With Risk of Cutaneous Malignant Melanoma,'' *Dermatoendocrinology,* vol. 1(6), pp. 294–299, 2009.
21. Zhang, M., A.A. Qureshi, A.C. Geller, et al., ''Use of Tanning Beds and Incidence of Skin Cancer,'' *Journal of Clinical Oncology,* vol. 30, pp. 1588–1593, 2012.
22. Mayer, J.A., S.I. Woodruff, D.J. Slymen, et al., ''Adolescents' Use of Indoor Tanning: A Large-Scale Evaluation of Psychosocial, Environmental, and Policy-Level Correlates,'' *American Journal of Public Health,* vol. 101(5), pp. 930–938, 2011.

List of Subjects in 21 CFR Part 878

Medical devices.

Therefore, under the Federal Food, Drug, and Cosmetic Act, and under authority delegated to the Commissioner of Food and Drugs, 21 CFR part 878 is amended as follows:

PART 878—GENERAL AND PLASTIC SURGERY DEVICES

■ 1. The authority citation for 21 CFR part 878 continues to read as follows:

Authority: 21 U.S.C. 351, 360, 360c, 360e, 360j, 360l, 371.

■ 2. Section 878.4635 is revised to read as follows:

§ 878.4635 Sunlamp products and ultraviolet lamps intended for use in sunlamp products.

(a) *Identification.* A sunlamp product is any device designed to incorporate one or more ultraviolet (UV) lamps intended for irradiation of any part of the living human body, by UV radiation with wavelengths in air between 200 and 400 nanometers, to induce skin tanning. This definition includes tanning beds and tanning booths. A UV lamp intended for use in sunlamp products is any lamp that produces UV radiation in the wavelength interval of 200 to 400 nanometers in air.

(b) *Classification.* Class II (special controls). The special controls for sunlamp products and UV lamps intended for use in sunlamp products are:

(1) Conduct performance testing that demonstrates the following:

(i) Device meets appropriate output performance specifications such as wavelengths, energy density, and lamp life; and

(ii) Device's safety features, such as timers to limit UV exposure and alarms, function properly.

(2) Demonstrate that device is mechanically safe to prevent user injury.

(3) Demonstrate software verification, validation, and hazard analysis.

(4) Demonstrate that device is biocompatible.

(5) Demonstrate that device is electrically safe and electromagnetically compatible in its intended use environment.

(6) *Labeling*—(i) *Sunlamp products.* (A) The warning statement below must appear on all sunlamp products and must be placed in a black box. This statement must be permanently affixed or inscribed on the product when fully assembled for use so as to be legible and readily accessible to view by the person who will be exposed to UV radiation immediately before the use of the product. It shall be of sufficient durability to remain legible throughout the expected lifetime of the product. It shall appear on a part or panel displayed prominently under normal conditions of use so that it is readily accessible to view whether the tanning bed canopy (or tanning booth door) is

open or closed when the person who will be exposed approaches the equipment and the text shall be at least 10 millimeters (height). Labeling on the device must include the following statement:

Attention: This sunlamp product should not be used on persons under the age of 18 years.

(B) Manufacturers shall provide validated instructions on cleaning and disinfection of sunlamp products between uses in the user instructions.

(ii) *Sunlamp products and UV lamps intended for use in sunlamp products.* Manufacturers of sunlamp products and UV lamps intended for use in sunlamp products shall provide or cause to be provided in the user instructions, as well as all consumer-directed catalogs, specification sheets, descriptive brochures, and Web pages in which sunlamp products or UV lamps intended for use in sunlamp products are offered for sale, the following contraindication and warning statements:

(A) ''Contraindication: This product is contraindicated for use on persons under the age of 18 years.''

(B) ''Contraindication: This product must not be used if skin lesions or open wounds are present.''

(C) ''Warning: This product should not be used on individuals who have had skin cancer or have a family history of skin cancer.''

(D) ''Warning: Persons repeatedly exposed to UV radiation should be regularly evaluated for skin cancer.''

(c) *Performance standard.* Sunlamp products and UV lamps intended for use in sunlamp products are subject to the electronic product performance standard at § 1040.20 of this chapter.

Dated: May 27, 2014.

Leslie Kux,

Assistant Commissioner for Policy.

[FR Doc. 2014–12546 Filed 5–29–14; 11:15 am]

BILLING CODE 4160–01–P

DEPARTMENT OF TRANSPORTATION

Federal Transit Administration

49 CFR Part 613

Federal Highway Administration

23 CFR Part 450

[Docket No. FTA–2013–0029]

Policy Guidance on Metropolitan Planning Organization (MPO) Representation

AGENCIES: Federal Transit Administration (FTA) and Federal Highway Administration (FHWA), DOT.

ACTION: Policy guidance.

SUMMARY: The FTA and FHWA are jointly issuing this guidance on implementation of provisions of the Moving Ahead for Progress in the 21st Century Act (MAP–21), that require representation by providers of public transportation in each metropolitan planning organization (MPO) that serves a transportation management area (TMA) no later than October 1, 2014. The purpose of this guidance is to assist MPOs and providers of public transportation in complying with this new requirement.

DATES: Effective June 2, 2014.

FOR FURTHER INFORMATION CONTACT: Dwayne Weeks, FTA Office of Planning and Environment, telephone (202) 366–4033 or *Dwayne.Weeks@dot.gov;* or Harlan Miller, FHWA Office of Planning, telephone (202) 366–0847 or *Harlan.Miller@dot.gov.*

SUPPLEMENTARY INFORMATION:

Introduction

The FTA and FHWA are jointly issuing this policy guidance on the implementation of 23 U.S.C. 134(d)(2)(B) and 49 U.S.C. 5303(d)(2)(B), as amended by sections 1201 and 20005 of MAP–21, Public Law 112–141, which require representation by providers of public transportation in each MPO that serves an area designated as a TMA by October 1, 2014.[1] A TMA is defined as an urbanized area with a population of over 200,000 individuals as determined by the 2010 census, or an area with a population of fewer than 200,000 individuals that is designated as a TMA by the request of the Governor and the MPO designated for the area.[2] As of the date of this guidance, of the approximately 420 MPOs throughout the Nation, approximately 210 MPOs serve an area designated as a TMA. The FTA and FHWA will issue a joint notice of proposed rulemaking to amend 23 CFR part 450 and 49 CFR part 613 to make these planning regulations consistent with these and other current statutory requirements. Once FTA and FHWA issue a final rule amending the planning regulations, MPOs must comply with the requirements in those regulations.

To increase the accountability and transparency of the Federal-aid highway and Federal transit programs and to improve project decisionmaking through performance-based planning and programming, MAP–21 establishes a performance management framework. The MAP–21 requires FHWA to establish, through a separate rulemaking, performance measures and standards to be used by States to assess the condition of the pavements and bridges, serious injuries and fatalities, performance of the Interstate System and National Highway System, traffic congestion, on-road mobile source emissions, and freight movement on the Interstate System.[3] The MAP–21 also requires FTA to establish, through separate rulemakings, state of good repair and safety performance measures, and requires each provider of public transportation to establish performance targets in relation to these performance measures.[4]

To establish performance targets that address these performance measures, States and MPOs must coordinate their targets with each other to ensure consistency, to the maximum extent practicable.[5] For transit-related performance targets, States and MPOs must coordinate their targets relating to safety and state of good repair with providers of public transportation to ensure consistency with other performance-based provisions applicable to providers of public transportation, to the maximum extent practicable.[6] An MPO must describe in its metropolitan transportation plans the performance measures and targets used to assess the performance of its transportation system.[7] Statewide and metropolitan transportation

[1] ''Not later than 2 years after the date of enactment of the Federal Public Transportation Act of 2012, each metropolitan planning organization that serves an area designated as a transportation management area shall consist of . . . officials of public agencies that administer or operate major modes of transportation in the metropolitan area, including representation by providers of public transportation.'' 49 U.S.C. 5303(d)(2)(B). See also 23 U.S.C. 134(d)(2)(B).

[2] 23 U.S.C. 134(k)(1); 49 U.S.C. 5303(k)(1).

[3] 23 U.S.C. 150(c).

[4] 49 U.S.C. 5326(b), (c), 5329(b), (d).

[5] 23 U.S.C. 134(h)(2); 49 U.S.C. 5303(h)(2).

[6] 23 U.S.C. 134(h)(2); 49 U.S.C. 5303(h)(2).

[7] 23 U.S.C. 134(i)(2)(B); 49 U.S.C. 5303(i)(2)(B).

improvement programs (STIPs and TIPs) must include, to the maximum extent practicable, a description of the anticipated effect of the program toward achieving the performance targets established in the statewide or metropolitan transportation plan, linking investment priorities and the highway and transit performance targets.[8] These changes to the planning process will be addressed in FHWA and FTA's anticipated joint rulemaking amending 23 CFR part 450 and 49 CFR part 613.[9]

As part of its performance management framework, MAP–21 assigns MPOs the new transit-related responsibilities described above, i.e., to establish performance targets with respect to transit state of good repair and transit safety and to address these targets in their transportation plans and TIPs. Representation by providers of public transportation in each MPO that serves a TMA will better enable each MPO to define performance targets and to develop plans and TIPs that support an intermodal transportation system for the metropolitan area. Including representation by providers of public transportation in each MPO that serves an area designated as a TMA is an essential element of MAP–21's performance management framework and will support the successful implementation of a performance-based approach to transportation decisionmaking.

The FTA conducted an On-Line Dialogue on the MAP–21 requirement to include representation by providers of public transportation in each MPO that serves an area designated as a TMA from March 5 through March 29, 2013. Through this forum, FTA received input from MPOs, local elected officials, transit agencies, and the general public, with over 3,000 visits to the Web site. Over 100 ideas were submitted from 340 registered users who also provided hundreds of comments and votes on these ideas. Participants discussed the complex nature of MPOs and the advantages of providing flexibility for MPOs and providers of public transportation to decide locally how to include representation by providers of public transportation in the MPO.

To assist MPOs and providers of public transportation in understanding and satisfying the new requirement by the statutory deadline, FTA and FHWA issued proposed policy guidance for review and comment on September 30, 2013, with a 30-day comment period, under Docket Number FTA–2013–0029.[10] The FTA and FHWA received 53 individual responses that contained approximately 160 comments. This guidance incorporates FTA and FHWA's responses to those comments.

Summary Discussion of Comments Received in Response to the Proposed Guidance

The proposed guidance sought comments on several specific issues: (1) The specifically designated representative; (2) the eligibility of representatives of providers of public transportation to serve as specifically designated representatives; (3) the cooperative process to select a specifically designated representative in MPOs with multiple providers of public transportation; (4) the role of the specifically designated representative; and (5) restructuring the MPOs to include representation by providers of public transportation.

The FTA and FHWA received 53 individual responses that contained approximately 160 comments: 25 MPOs, 10 providers of public transportation, 9 individuals, 4 trade associations, 4 others (including municipalities and advocacy organizations), and a State department of transportation. Several comments were outside the scope of this guidance and are therefore not addressed in this guidance. For example, some comments were specific to a situation in a particular metropolitan area. Where appropriate, FTA has reached out to the commenters to address their concerns. Comments pertaining to the guidance and FTA and FHWA's responses are discussed below.

The Need for Guidance in General

The FTA and FHWA received 19 comments supporting the need for policy guidance to implement MAP–21's changes to 23 U.S.C. 134(d)(2)(B) and 49 U.S.C. 5303(d)(2)(B). These commenters agreed that policy guidance would provide needed direction on how MPOs and providers of public transportation may meet the MAP–21 requirements for representation of providers of public transportation on MPOs.

The FTA and FHWA received three comments that stated the change in language to 23 U.S.C. 134(d)(2)(B) and 49 U.S.C. 5303(d)(2)(B) does not warrant policy guidance because of the long history of granting MPOs latitude in deciding the composition of their policy boards. Moreover, these comments stated that the responsibilities added by the new language can be addressed through the existing certification review process and do not warrant additional guidance.

The FTA and FHWA have determined that policy guidance is necessary to provide direction to MPOs and providers of public transportation on how to meet this new statutory provision within the 2-year time frame.

A Specifically Designated Public Transportation Representative

Twenty-three commenters expressed concurrence with the proposed guidance that the intent of the MAP–21 provision to include ''representation by providers of public transportation'' is that representatives of providers of public transportation, once designated, should have equal decisionmaking rights and authorities as the other members that are on the policy board of an MPO that serves a TMA. Thirteen commenters indicated that they did not support that interpretation of the provision and urged FTA and FHWA to provide flexibility to allow MPOs to include transit representation in ways that would fit the unique circumstances of each metropolitan area. Two of these commenters asserted that MAP–21 did not change a local jurisdiction's authority to assign voting rights to policy board members. One commenter stated there is no basis in law for requiring MPOs to alter their board compositions. Many asserted that including public transit agencies as non-voting members or on MPO technical or policy committees is adequate to satisfy 23 U.S.C. 134(d)(2)(B) and 49 U.S.C. 5303(d)(2)(B). A few commenters stated that a policy or technical committee would be more appropriate for transit decisionmaking, as MPO policy boards deal with many issues outside of transportation.

The clear intent of this legislative provision is to ensure that providers of public transportation are represented on the MPO board and should have equal decisionmaking rights and authorities as the other members that are on the policy board of an MPO that serves a TMA. Contrary to the conclusions of some of the commenters, 23 U.S.C. 134(d)(2) and 49 U.S.C. 5303(d)(2) expressly provide that MPOs serving TMAs must alter their board compositions, if necessary, in order to attain the statutorily required structure. Congress amended 23 U.S.C. 134(d)(2)(B) and 49 U.S.C. 5303(d)(2)(B) to provide that, among other mandatory MPO members, MPOs serving an area designated as a TMA specifically ''shall consist of . . . representation by providers of public transportation.'' Congress also amended 23 U.S.C.

[8] 23 U.S.C. 134(j)(2)(D); 49 U.S.C. 5303(i)(2)(D) (TIPs) and 23 U.S.C. 135(g)(4); 49 U.S.C. 5304(g)(4) (STIPs).

[9] FHWA RIN 2125–AF52; FTA RIN 2132–AB10.

[10] 78 FR 60015 (Sept. 30, 2013).

134(d)(5)(B) and 49 U.S.C. 5303(d)(5)(B) to provide that an MPO ''may be restructured to meet the requirements of paragraph (2) without undertaking a redesignation.'' Additionally, the Conference Report accompanying MAP–21 states, ''The conference committee requires the structure of all Metropolitan Planning Organizations include officials of public agencies that administer or operate public transportation systems within two years of enactment.'' [11] Congress also made clear that the term *metropolitan planning organization* refers to ''the policy board'' of the organization, not its advisory or non-decisionmaking elements.[12]

Multiple MPOs that serve areas designated as TMAs commented that 23 U.S.C. 134(d)(3) and 49 U.S.C. 5303(d)(3) exempt them from having to comply with 23 U.S.C. 134(d)(2) and 49 U.S.C. 5303(d)(2) because the MPOs are acting pursuant to authority created under State law that was in effect on December 18, 1991. The exemption has existed in statute in some form since 1991. The FTA and FHWA's long-standing interpretation of this provision is that an exemption from the MPO structure requirements is only appropriate for an MPO where (1) the MPO operates pursuant to a State law that was in effect on or before December 18, 1991; (2) such State law has not been amended after December 18, 1991, as regards to the structure or organization of the MPO; and (3) the MPO has not been designated or re-designated after December 18, 1991. An MPO that claims an exemption should self-certify its exempt status with FTA and FHWA as part of the MPO certification process described at 23 CFR 450.334 or through some other documentation.

With respect to who should be eligible to represent providers of public transportation on the MPO, two commenters, including a transit industry trade association, requested that FTA and FHWA establish that the representative ''must'' be an elected official on the policy board of a provider being represented or a direct representative employed by a provider being represented. Another commenter expressed concern that the proposed qualifications of the representative were too specific. A few commenters requested that, in addition to the representative being an officer of a provider of public transportation or an elected official that serves on the board of directors of the provider of public transportation, the representative may also be a non-elected member appointed to the board of directors of the provider of public transportation. The FTA and FHWA concur that an appointed member of a public transportation provider's board of directors also can serve as a representative of providers of public transportation on the MPO. In keeping with FTA and FHWA's goal of providing flexibility to MPOs, the representative should be either a board member (elected or appointed) or officer of a provider of public transportation being represented on the MPO. The guidance remains suggestive rather than mandatory in this respect.

Fourteen entities requested that the guidance state definitively that a representative of providers of public transportation cannot fulfill multiple roles on an MPO board, for example, due to that person's position as a local elected official or an appropriate State official. These commenters asserted that an ''MPO board member cannot simultaneously represent multiple organizations'' and that an elected official who is appointed to the MPO as a representative of that official's local government does not necessarily represent the interests of transit, even if he or she happens to be on the public transportation provider's board. Eight commenters asserted that the presence on the MPO of local elected officials should fully satisfy the new requirement. Seven commenters sought clarity generally on this provision. The FTA and FHWA agree that this proposed provision needed clarification. The policy guidance states that a public transportation representative on an MPO should not serve as one of the other mandatory MPO members set forth in 23 U.S.C. 134(d)(2) and 49 U.S.C. 5303(d)(2). For example, a member of an MPO board whose assignment comes by virtue of his or her position as an elected official should not also attempt to serve as a representative of providers of public transportation on the MPO board.

A few commenters highlighted the potential conflict that could arise when a representative of providers of public transportation is the subordinate of another MPO board member and the superior board member's and the public transportation providers' interests do not align. Two commenters noted that when a local government is the provider of public transportation, that local government effectively would be given an additional vote, upsetting a carefully constructed balance on the MPO. Another commenter noted that a conflict could result when a public transportation provider other than the designated recipient [13] serves as the representative of the providers of public transportation on the MPO board. The FTA and FHWA appreciate that recommending a separate and distinct representative of providers of public transportation could introduce a conflict or upset a carefully constructed balance on the MPO. However, 23 U.S.C. 134(a)(2) and 49 U.S.C. 5303(a)(2) state that ''it is in the national interest . . . to encourage the continued improvement and evolution of the metropolitan and statewide planning processes by metropolitan planning organizations, State departments of transportation, and public transit operators.'' The MAP–21's establishment of a performance-based approach to transportation decisionmaking evolves and improves the metropolitan and statewide planning processes, increasing the accountability and transparency of the Federal surface transportation program and improving project decisionmaking. The inclusion of a representative of providers of public transportation in each MPO that serves a TMA is a critical element of MAP–21's performance management framework as it will enable the MPO to establish balanced performance targets and improve its ability to develop plans and programs that support an intermodal transportation system for the metropolitan area. As such, it contributes to the continued improvement and evolution of the cooperative and collaborative metropolitan planning process.

Three commenters suggested that the term FTA and FHWA used to refer to a public transportation representative on an MPO board, ''specifically designated representative,'' implied a role and responsibilities that differed from other members of the MPO board or ''create[d] a subclass of board member.'' This was not the intention of the proposed guidance. The guidance affirms that a representative of providers of public transportation on an MPO that serves a TMA, once designated, should have equal decisionmaking rights and authorities as the other members that are on the policy board of an MPO that serves a TMA. The FTA and FHWA

[11] H.R. Conf. Rep. 112–557 (2012).

[12] 23 U.S.C. 134(b)(2); 49 U.S.C. 5303(b)(2).

[13] The term ''designated recipient'' means ''(A) an entity designated, in accordance with the planning process under sections 5303 and 5304, by the Governor of a State, responsible local officials, and publicly owned operators of public transportation, to receive and apportion amounts under section 5336 to urbanized areas of 200,000 or more in population; or (B) a State or regional authority, if the authority is responsible under the laws of a State for a capital project and for financing and directly providing public transportation.'' 49 U.S.C. 5302(4).

recognize that the term ''specifically designated representative'' generated considerable confusion. Consequently, the terms ''representative of providers of public transportation'' and ''public transportation representative'' replace it in the guidance.

Providers of Public Transportation

Eight commenters stated that to require the representative of providers of public transportation to be a direct recipient of the Urbanized Area Formula funding program is too restrictive, arguing that many large urbanized areas allocate transit funding through sub-recipients that would be precluded from participating in the MPO process. Four additional commenters interpreted this language to mean that a city or county that is not a direct recipient would be precluded from being able to represent transit interests on the MPO board. One commenter asserted that ''all public transportation agencies within the MPO should be eligible to serve in this important role.''

The FTA and FHWA agree that the use of the term ''direct recipient'' was overly restrictive. The policy guidance clarifies that the representative of providers of public transportation on an MPO that serves an area designated as a TMA should be a provider of public transportation in the metropolitan planning area and a designated recipient, a direct recipient, or a sub-recipient of Urbanized Area Formula funding, or another public transportation entity that is eligible to receive Urbanized Area Formula funding. The FTA and FHWA recommend selecting a representative from among those public transportation providers that are eligible to receive Urbanized Area Formula funding because most Federal transit funding planned by MPOs serving TMAs is awarded under this program, and an eligible recipient of Urbanized Area Formula funding will be in the best position to represent transit interests on the MPO.

Process for the Selection of Public Transportation Representatives

Three providers of public transportation expressed support for the proposed policy that MPOs that serve an area designated as a TMA should cooperate with providers of public transportation and the State to amend their metropolitan planning agreements to include the cooperative process for selecting representatives of providers of public transportation on the MPO board. Conversely, while agreeing that MPOs should use a cooperative process to select representatives of providers of public transportation, eight MPOs encouraged either the elimination or the softening of this policy recommendation, which would be ''an unnecessary burden'' that is not needed to meet the goals of MAP–21.

The metropolitan planning agreement is a productive mechanism that facilitates the working relationships among MPOs, States, and providers of public transportation as they fulfill their metropolitan transportation planning requirements. Regulations require that MPOs, States, and public transportation operators cooperatively determine their mutual responsibilities in carrying out the metropolitan transportation planning process and that these responsibilities be clearly identified in written agreements among the MPO, the State, and the public transportation operators serving the metropolitan planning area.[14] The process to select representatives of the providers of public transportation for the MPO board is one of the mutual responsibilities of the MPO, the State, and the providers of public transportation. Thus, FTA and FHWA encourage, but do not require, MPOs, States, and providers of public transportation to amend their metropolitan planning agreements to document the process for selecting representatives of providers of public transportation. However, given the statutory deadline of October 1, 2014, and the expectation that MPOs, States, and providers of public transportation may need to update their agreements to address the MAP–21 performance management requirements once finalized through rulemaking, the policy guidance clarifies that an MPO board resolution, or other documentation, adopting the process to select representatives of providers of public transportation should be sufficient.

While the guidance recommends that MPOs formally adopt some kind of process for the selection of public transportation representatives, the guidance does not prescribe a specific selection process. This guidance affords the flexibility for providers of public transportation, States, and MPOs to determine the process to select representatives of providers of public transportation for the MPO policy board. This could include the selection of representatives by the providers of transit services themselves, as suggested by one commenter who said that ''it should be up to the transit agencies to select whom they want to represent their interests [and] the vote for this representative should occur solely between the transit operators, and should be completely independent of the MPO board and staff's decision making.'' By analogy, in many urbanized areas, providers of public transportation engage with each other to select a designated recipient or to allocate Urbanized Area Formula funds that have been apportioned to the urbanized area. The guidance clarifies that MPOs, States, and providers of public transportation have the flexibility to determine the most effective process that best serves the interests of the metropolitan planning area.

Role of the Public Transportation Representative

Four commenters expressed concern that the requirement to specify the role and responsibilities of the representative of providers of public transportation would place restrictions on the role of the transit representative. This is not the intent. In the guidance, FTA and FHWA recommend that MPOs establish, at a minimum, that a representative must consider the needs of all eligible public transportation providers that provide service in the metropolitan planning area and, in exercising this responsibility, the representative should have equal decisionmaking rights and authorities as the other members that are on the policy board of an MPO that serves a TMA. This guidance is intended to recommend a base level for effective representation and is not intended to restrict the role of a transit representative on an MPO.

While one commenter expressed support for the proposal that MPOs serving TMAs should amend their bylaws to describe the collaborative process of selecting representatives of providers of public transportation and the role the selected representative should play ''because it would help ensure that transit-related issues and interests are appropriately and meaningfully represented in MPO decision-making,'' 10 commenters expressed strong concern, claiming that the proposal was unnecessary, onerous, and that it had no basis in law. The proposed policy guidance did not propose to require MPOs to establish or amend bylaws, but only recommended such action. The FTA and FHWA have retained in the policy guidance that MPOs should amend their bylaws, if the MPO has them, to provide that a public transportation representative should consider the needs of all eligible public transportation providers that provide service in the metropolitan planning area and that, in exercising this responsibility, the representative should have equal decisionmaking rights and

[14] 23 CFR 450.314.

authorities as the other members that are on the policy board of an MPO that serves a TMA. The guidance also recommends that an MPO could affirm these two policies in a board resolution or other documentation.

Restructuring MPOs To Include Representation by Providers of Public Transportation

Eighteen commenters expressed support for the proposal that an MPO that serves a TMA that has multiple providers of public transportation should cooperate [15] with the eligible providers to determine how the MPO will include representation by providers of public transportation on its policy board. The example methods that FTA and FHWA described in the proposed guidance included having all providers represented by a single board position, rotating the board position among several providers, or proportional representation of all eligible providers on the board. Many commenters proposed that representation should not be limited to a single transit representative. Thirteen commenters proposed that all providers of public transportation that operate in a TMA should be given representation on the MPO board. One commenter opined that ''each transit agency/provider should have a vote in matters before the MPO rather than having several transit providers share a single vote.'' Another commenter suggested that ''the best approach is one that rotates the board position among all eligible providers.'' Still another commenter proposed that ''all efforts be made to include the largest providers of public transportation in a region'' as this policy would ''ensure that the majority of public transportation users were represented in [the] MPO decision making process.''

The FTA and FHWA acknowledge that there are multiple ways to include representation of providers of public transportation on MPO boards and note that many MPOs currently do so. For example, the Regional Transportation Council of the North Central Texas Council of Governments (NCTCOG); the Portland, Oregon, MPO (JPACT); the Miami Valley Regional Planning Commission; the National Capital Region Transportation Planning Board that serves the Washington, DC, metropolitan area; and the Ozarks Transportation Organization in Springfield, Missouri, all cited their inclusion of transit representatives as voting members on their MPO boards.

An MPO serving one of the Nation's newest TMAs, the Portland Area Comprehensive Transportation System (PACTS) MPO in Portland, Maine, accommodates representation by providers of public transportation on the MPO policy board through a cooperative process. As documented in the PACTS bylaws, seven providers of public transportation serve on the Transit Committee of PACTS. The PACTS Transit Committee identifies a representative from the seven providers to serve on the Policy Committee, the Technical Committee, the Planning Committee, and the Executive Committee, and to represent transit for the entire metropolitan planning area. The representatives serve for 2 years and may serve successive terms.

The policy guidance provides MPOs, States, and providers of public transportation with the flexibility to determine the most effective arrangement to best serve the interests of the metropolitan planning area.

Policy Guidance

Representatives of Providers of Public Transportation

By October 1, 2014, MPOs that serve an area designated as a TMA must include ''(A) local elected officials; (B) officials of public agencies that administer or operate major modes of transportation in the metropolitan area, including representation by providers of public transportation; and (C) appropriate State officials.'' [16] The requirement to include ''representation by providers of public transportation'' is a new requirement under MAP–21. The intent of this provision is that representatives of providers of public transportation, once designated, should have equal decisionmaking rights and authorities as the other members that are on the policy board of an MPO that serves a TMA. This expectation reflects the long-standing position of FHWA and FTA with respect to statutorily required MPO board members.

A representative of providers of public transportation should be an elected or appointed member of the provider's board of directors or a senior officer of the provider, such as a chief executive officer or a general manager.

A representative of providers of public transportation should not also attempt to represent other entities on the MPO. For example, if a local elected official is also a member of the board of directors of a provider of public transportation and the elected official represents his or her local jurisdiction's interests on the MPO, the local official should not also serve as a representative of public transportation providers generally.

An MPO is exempt from the structure requirements of 23 U.S.C. 134(d)(2) and 49 U.S.C. 5303(d)(2) if (1) the MPO operates pursuant to a State law that was in effect on or before December 18, 1991; (2) such State law has not been amended after December 18, 1991, as regards the structure or organization of the MPO; and (3) the MPO has not been designated or re-designated after December 18, 1991. An MPO that claims an exemption should self-certify its exempt status with FTA and FHWA as part of the MPO self-certification process described at 23 CFR 450.334 or through some other documentation.

Eligible Providers of Public Transportation

To satisfy 23 U.S.C. 134(d)(2)(B) and 49 U.S.C. 5303(d)(2)(B), a representative of a provider of public transportation that operates in a TMA should be eligible to be a designated recipient, a direct recipient, or a sub-recipient of the Urbanized Area Formula funding program.

Process for the Selection of Representatives of Providers of Public Transportation

To select representatives of providers of public transportation, MPOs, States, and providers of public transportation have the flexibility to determine the most effective process that best serves the interests of the metropolitan planning area. The FTA and FHWA encourage MPOs that serve an area designated as a TMA to amend their metropolitan planning agreements in cooperation with providers of public transportation and the State to include the cooperative process they have developed to select representatives of providers of public transportation for inclusion on the MPO board. The Metropolitan Transportation Planning rule at 23 CFR 450.314 provides for metropolitan planning agreements in which MPOs, States, and providers of public transportation cooperatively determine their mutual responsibilities in carrying out the metropolitan transportation planning process. Alternatively, an MPO should formally adopt the cooperative selection process through a board resolution or other documentation.

[15] Cooperation means that ''the parties involved in carrying out the transportation planning and programming processes work together to achieve a common goal or objective.'' 23 CFR 450.104.

[16] 23 U.S.C. 134(d)(2); 49 U.S.C. 5303(d)(2).

Role of a Representative of Providers of Public Transportation

A representative of providers of public transportation should consider the needs of all eligible public transportation providers that provide service in the metropolitan planning area. In exercising this responsibility, the representative should have equal decisionmaking rights and authorities as the other members that are on the policy board of an MPO that serves a TMA. An MPO serving a TMA should formally establish through a board resolution the role and responsibilities of a representative of providers of public transportation, including, at a minimum, that the transit representative should (1) consider the needs of all eligible providers of public transportation in the metropolitan planning area and to address those issues that are relevant to the responsibilities of the MPO, and (2) have equal decisionmaking rights and authorities as the other members that are on the policy board of an MPO that serves a TMA.

To the extent that an MPO has bylaws, the MPO should, in consultation with transit providers in the TMA, develop bylaws that describe the establishment, roles, and responsibilities of transit representatives. These bylaws should explain the process by which the public transportation representative will identify transit-related issues for consideration by the MPO policy board and verify that transit priorities are considered in planning products to be adopted by the MPO. In TMAs with multiple providers of public transportation, the bylaws also should outline how representatives will consider the needs of all eligible providers of public transportation and address issues that are relevant to the responsibilities of the MPO.

Restructuring MPOs To Include Representation by Providers of Public Transportation

Title 23 U.S.C. 134(d)(5)(B) and 49 U.S.C. 5303(d)(5)(B) provide that an MPO may be restructured to meet the law's representation requirements without having to secure the agreement of the Governor and units of general purpose government as part of a redesignation.

There are multiple providers of public transportation within most TMAs. An MPO that serves an area designated as a TMA that has multiple providers of public transportation may need to cooperate with the eligible providers to determine how the MPO will meet the requirement to include representation by providers of public transportation. There are various approaches to meeting this requirement. For example, an MPO may allocate a single board position to eligible providers of public transportation collectively, providing that one representative of providers of public transportation must be agreed upon through a cooperative process. The requirement for representation might also be met by rotating the board position among all eligible providers or by providing all eligible providers with proportional representation. However the representation is ultimately designated, the MPO should formally adopt the revised structure through a board resolution, bylaws, a metropolitan planning agreement, or other documentation, as appropriate.

Apart from the requirement for representation on the MPO's policy board, an MPO also may allow for transit representation on policy or technical committees. Eligible providers of public transportation that do not participate on the MPO's policy board may hold positions on advisory or technical committees.

The FHWA and FTA encourage MPOs, States, local stakeholders, and providers of public transportation to take this opportunity to determine the most effective governance and institutional arrangements to best serve the interests of the metropolitan planning area.

Issued on: May 21, 2014.

Therese McMillan,

Deputy Administrator, Federal Transit Administration.

Gregory G. Nadeau,

Deputy Administrator, Federal Highway Administration.

[FR Doc. 2014–12163 Filed 5–30–14; 8:45 am]

BILLING CODE 4910–22–P

DEPARTMENT OF THE TREASURY

Internal Revenue Service

26 CFR Part 31

[TD 9662]

RIN 1545–BJ31

Designation of Payor To Perform Acts Required of an Employer; Correction

AGENCY: Internal Revenue Service (IRS), Treasury.

ACTION: Correcting amendment.

SUMMARY: This document contains corrections to final regulations (TD 9662) that were published in the **Federal Register** on Monday, March 31, 2014 (79 FR 17860) relating to section 3504 of the Internal Revenue Code (Code) providing circumstances under which a person (payor) is designated to perform the acts required of an employer and is liable for employment taxes with respect to wages or compensation paid by the payor to individuals performing services for the payor's client pursuant to a service agreement between the payor and the client.

DATES: This correction is effective on June 2, 2014, and is applicable March 31, 2014.

FOR FURTHER INFORMATION CONTACT: Jeanne Royal Singley at (202) 317–6798 (not a toll-free number).

SUPPLEMENTARY INFORMATION:

Background

The final regulations that are subject of this document are under section 3504 of the Internal Revenue Code.

Need for Correction

As published, final regulations (TD 9662) contain errors that may prove to be misleading and are in need of clarification.

Correction of Publication

Accordingly, 26 CFR part 31 is corrected by making the following correcting amendments:

PART 31—EMPLOYMENT TAXES AND COLLECTION OF INCOME TAX AT THE SOURCE

■ **Paragraph 1.** The authority citation for part 31 continues to read in part as follows:

Authority: 26 U.S.C. 7805 * * *

§ 31.3504–2 [Corrected]

■ **Par. 2.** In § 31.3504–2, paragraph (e)(9) *Example 9.* the language ''Corporation U'' is removed and the language ''Corporation V'' is added in its place.

Martin V. Franks,

Chief, Publications and Regulations Branch, Legal Processing Division, Associate Chief Counsel (Procedure and Administration).

[FR Doc. 2014–12614 Filed 5–30–14; 8:45 am]

BILLING CODE 4830–01–P

DEPARTMENT OF HOMELAND SECURITY

Coast Guard

33 CFR Part 165

[Docket Number USCG–2014–0111]

RIN 1625–AA00

Safety Zone, Atlantic Ocean; Virginia Beach, VA

AGENCY: Coast Guard, DHS.

ACTION: Temporary final rule.

SUMMARY: The Coast Guard is establishing a temporary safety zone on the navigable waters of the Atlantic Ocean in the vicinity of Virginia Beach, VA. This safety zone will restrict vessel movement in the specified area during the Virginia Symphony Orchestra Fireworks. This action is necessary to provide for the safety of life and property on the surrounding navigable waters during the air show.

DATES: This rule is effective from 9:15 p.m. until 9:45 p.m. on September 11, 2014.

ADDRESSES: Documents mentioned in this preamble are part of docket [USCG–2014–0111]. To view documents mentioned in this preamble as being available in the docket, go to *http://www.regulations.gov*, type the docket number in the ''SEARCH'' box and click ''SEARCH.'' Click on Open Docket Folder on the line associated with this rulemaking. You may also visit the Docket Management Facility in Room W12–140 on the ground floor of the Department of Transportation West Building, 1200 New Jersey Avenue SE., Washington, DC 20590, between 9 a.m. and 5 p.m., Monday through Friday, except Federal holidays.

FOR FURTHER INFORMATION CONTACT: If you have questions on this rule, call or email LCDR Hector Cintron, Waterways Management Division Chief, Sector Hampton Roads, Coast Guard; telephone (757) 668–5581, email *Hector.L.Cintron@uscg.mil*. If you have questions on viewing or submitting material to the docket, call Cheryl Collins, Program Manager, Docket Operations, telephone (202) 366–9826.

SUPPLEMENTARY INFORMATION:

Table of Acronyms

DHS Department of Homeland Security
FR **Federal Register**
NPRM Notice of Proposed Rulemaking

A. Regulatory History and Information

The Virginia Symphony Orchestra Firework Display over the Atlantic Ocean in Virginia Beach, Virginia, is an annual event that has previously been held on Wednesdays. It is typically included in the table to 33 CFR 165.506, at section (c) event number ''9'', which provides a recurring safety zone for certain annual events falling on Wednesday, Friday, Saturday, Sunday. However, in 2014, the organizers will hold it on a Thursday. The perimeter of the safety zone and the enforcement times remain the same as that from the table, only the day of the week will change. A Notice to Proposed Rulemaking was published on April 7, 2014 in the **Federal Register** (79 FR 19031). We received no comments on the proposed rule. No public meeting was requested, and none was held.

B. Basis and Purpose

Spectator vessels may gather nearby to view the fireworks display. Due to the need for vessel control during the fireworks display, vessel traffic will be temporarily restricted to provide for the safety of participants, spectators and transiting vessels. Under provisions of 33 CFR 165.506, during the enforcement period, vessels may not enter the regulated area unless they receive permission from the Coast Guard Patrol Commander.

C. Discussion of the Final Rule

The Coast Guard will establish a safety zone on the waters of the Atlantic Ocean within a 1000 yard radius of the center located near the shoreline at position 36°–51′–12″ N/075°–58′–06″ W (NAD 1983), in the vicinity of Virginia Beach, Virginia. This safety zone will be enforced on September 11, 2014 between the hours of 9:15 p.m. and 9:45 p.m. Access to the safety zone will be restricted during the specified dates and times.

Except for vessels authorized by the Captain of the Port or his Representative, no person or vessel may enter or remain in the safety zone during the time frame listed. The Captain of the Port will give notice of the enforcement of the safety zone by all appropriate means to provide the widest dissemination of notice among the affected segments of the public. This will include publication in the Local Notice to Mariners and Marine Information Broadcasts.

D. Regulatory Analyses

We developed this rule after considering numerous statutes and executive orders related to rulemaking. Below we summarize our analyses based on these statutes and executive orders.

1. Regulatory Planning and Review

This rule is not a significant regulatory action under section 3(f) of Executive Order 12866, Regulatory Planning and Review, as supplemented by Executive Order 13563, Improving Regulation and Regulatory Review, and does not require an assessment of potential costs and benefits under section 6(a)(3) of Executive Order 12866 or under section 1 of Executive Order 13563. The Office of Management and Budget has not reviewed it under those Orders. The primary impact of these regulations will be on vessels wishing to transit the affected waterways during the safety zone on the Atlantic Ocean in the vicinity of Virginia Beach, VA from 9:15 p.m. until 9:45 p.m. on September 11, 2014. Although these regulations prevent traffic from transiting a portion of the Atlantic Ocean during these events, that restriction is limited in duration, affects only a limited area, and will be well publicized to allow mariners to make alternative plans for transiting the affected area.

2. Impact on Small Entities

The Regulatory Flexibility Act of 1980 (RFA), 5 U.S.C. 601–612, as amended, requires federal agencies to consider the potential impact of regulations on small entities during rulemaking. The term ''small entities'' comprises small businesses, not-for-profit organizations that are independently owned and operated and are not dominant in their fields, and governmental jurisdictions with populations of less than 50,000. The Coast Guard certifies under 5 U.S.C. 605(b) that this rule will not have a significant economic impact on a substantial number of small entities.

This rule will affect the following entities, some of which might be small entities: the owners or operators of vessels intending to transit or anchor in waters of the Atlantic Ocean during the outlined timeframe.

This safety zone will not have a significant economic impact on a substantial number of small entities for the following reasons: (i) The safety zone will only be in place for a limited duration, and (ii) before the enforcement period, maritime advisories will be issued allowing mariners to adjust their plans accordingly.

3. Assistance for Small Entities

Under section 213(a) of the Small Business Regulatory Enforcement Fairness Act of 1996 (Pub. L. 104–121), we want to assist small entities in understanding this rule. If the rule would affect your small business, organization, or governmental

jurisdiction and you have questions concerning its provisions or options for compliance, please contact the person listed in the **FOR FURTHER INFORMATION CONTACT**, above.

Small businesses may send comments on the actions of Federal employees who enforce, or otherwise determine compliance with, Federal regulations to the Small Business and Agriculture Regulatory Enforcement Ombudsman and the Regional Small Business Regulatory Fairness Boards. The Ombudsman evaluates these actions annually and rates each agency's responsiveness to small business. If you wish to comment on actions by employees of the Coast Guard, call 1–888–REG–FAIR (1–888–734–3247). The Coast Guard will not retaliate against small entities that question or complain about this rule or any policy or action of the Coast Guard.

4. Collection of Information

This rule will not call for a new collection of information under the Paperwork Reduction Act of 1995 (44 U.S.C. 3501–3520).

5. Federalism

A rule has implications for federalism under Executive Order 13132, Federalism, if it has a substantial direct effect on the States, on the relationship between the national government and the States, or on the distribution of power and responsibilities among the various levels of government. We have analyzed this rule under that Order and determined that this rule does not have implications for federalism.

6. Protest Activities

The Coast Guard respects the First Amendment rights of protesters. Protesters are asked to contact the person listed in the **FOR FURTHER INFORMATION CONTACT** section to coordinate protest activities so that your message can be received without jeopardizing the safety or security of people, places or vessels.

7. Unfunded Mandates Reform Act

The Unfunded Mandates Reform Act of 1995 (2 U.S.C. 1531–1538) requires Federal agencies to assess the effects of their discretionary regulatory actions. In particular, the Act addresses actions that may result in the expenditure by a State, local, or tribal government, in the aggregate, or by the private sector of $100,000,000 (adjusted for inflation) or more in any one year. Though this rule will not result in such an expenditure, we do discuss the effects of this rule elsewhere in this preamble.

8. Taking of Private Property

This rule will not cause a taking of private property or otherwise have taking implications under Executive Order 12630, Governmental Actions and Interference with Constitutionally Protected Property Rights.

9. Civil Justice Reform

This rule meets applicable standards in sections 3(a) and 3(b)(2) of Executive Order 12988, Civil Justice Reform, to minimize litigation, eliminate ambiguity, and reduce burden.

10. Protection of Children

We have analyzed this rule under Executive Order 13045, Protection of Children from Environmental Health Risks and Safety Risks. This rule is not an economically significant rule and does not create an environmental risk to health or risk to safety that may disproportionately affect children.

11. Indian Tribal Governments

This rule does not have tribal implications under Executive Order 13175, Consultation and Coordination with Indian Tribal Governments, because it does not have a substantial direct effect on one or more Indian tribes, on the relationship between the Federal Government and Indian tribes, or on the distribution of power and responsibilities between the Federal Government and Indian tribes.

12. Energy Effects

This action is not a ''significant energy action'' under Executive Order 13211, Actions Concerning Regulations That Significantly Affect Energy Supply, Distribution, or Use.

13. Technical Standards

This rule does not use technical standards. Therefore, we did not consider the use of voluntary consensus standards.

14. Environment

We have analyzed this rule under Department of Homeland Security Management Directive 023–01 and Commandant Instruction M16475.lD, which guide the Coast Guard in complying with the National Environmental Policy Act of 1969 (NEPA) (42 U.S.C. 4321–4370f), and have determined that this action is one of a category of actions that do not individually or cumulatively have a significant effect on the human environment. This rule involves the establishment of a safety zone. This rule is categorically excluded from further review under paragraph 34–g of Figure 2–1 of the Commandant Instruction. An environmental analysis checklist was determined not to be necessary because the event's environmental impact was already assessed for the existing regulation that covers the same time and location for other days of the week. We seek any comments or information that may lead to the discovery of a significant environmental impact from this rule.

List of Subjects in 33 CFR Part 165

Harbors, Marine safety, Navigation (water), Reporting and recordkeeping requirements, Security measures, Waterways.

For the reasons discussed in the preamble, the Coast Guard amends 33 CFR part 165 as follows:

PART 165—REGULATED NAVIGATION AREAS AND LIMITED ACCESS AREAS

■ 1. The authority citation for part 165 continues to read as follows:

Authority: 33 U.S.C. 1231; 46 U.S.C. Chapter 701, 3306, 3703; 50 U.S.C. 191, 195; 33 CFR 1.05–1, 6.04–1, 6.04–6, 160.5; Pub. L. 107–295, 116 Stat. 2064; Department of Homeland Security Delegation No. 0170.1.

■ 2. Add § 165.T05–0111 to read as follows:

§ 165.T05–0111 Safety Zone, Atlantic Ocean; Virginia Beach, VA.

(a) *Definitions.* For the purposes of this section, *Captain of the Port* means the Commander, Sector Hampton Roads. *Representative* means any Coast Guard commissioned, warrant or petty officer who has been authorized to act on the behalf of the Captain of the Port.

(b) *Location.* The following area is a safety zone: specified waters of the Captain of the Port Sector Hampton Roads zone, as defined in 33 CFR 3.25–10, all waters of the Atlantic Ocean within 1000 yards of 36°–51′–12″ N/075°–58′–06″ W (NAD 1983) in Virginia Beach, VA.

(c) *Regulations.* (1) In accordance with the general regulations in § 165.23, entry into this zone is prohibited unless authorized by the Captain of the Port, Hampton Roads or his designated representatives.

(2) The operator of any vessel in the immediate vicinity of this safety zone shall:

(i) Contact on scene contracting vessels via VHF channel 13 and 16 for passage instructions.

(ii) If on scene proceed as directed by any commissioned, warrant or petty officer on shore or on board a vessel that is displaying a U.S. Coast Guard Ensign.

(3) The Captain of the Port, Hampton Roads can be reached through the Sector Duty Officer at Sector Hampton Roads

in Portsmouth, Virginia at telephone number (757) 668–5555.

(4) The Coast Guard Representatives enforcing the safety zone can be contacted on VHF–FM marine band radio channel 13 (165.65 Mhz) and channel 16 (156.8 Mhz).

(d) *Enforcement Period.* This section will be enforced from 9:15 p.m. until 9:45 p.m. on September 11, 2014.

Dated: May 13, 2014.

John K. Little,

Captain, U.S. Coast Guard, Captain of the Port Hampton Roads.

[FR Doc. 2014–12384 Filed 5–30–14; 8:45 am]

BILLING CODE 9110–04–P

DEPARTMENT OF COMMERCE

National Oceanic and Atmospheric Administration

50 CFR Part 224

[Docket No. 120705210–4423–03]

RIN 0648–XC101

Endangered and Threatened Wildlife and Plants; Final Rule To List Five Species of Sturgeons as Endangered Under the Endangered Species Act

AGENCY: National Marine Fisheries Service (NMFS), National Oceanic and Atmospheric Administration (NOAA), Commerce.

ACTION: Final rule.

SUMMARY: We, NMFS, issue a final determination to list five species of foreign sturgeon as endangered under the Endangered Species Act (ESA). We updated the status reviews of the species to include additional information regarding the species and conservation efforts being made to protect them. We considered governmental and public comments on the proposed listing rule. We have made our determination that *Acipenser naccarii* (Adriatic sturgeon), and *A. sturio* (European sturgeon) in Western Europe, *A. sinensis* (Chinese sturgeon) in the Yangtze River basin, and *A. mikadoi* (Sakhalin sturgeon) and *Huso dauricus* (Kaluga sturgeon) in the Amur River Basin/Sea of Japan/Sea of Okhotsk region, should be listed as endangered species. We will not designate critical habitat because the geographical areas occupied by these species are entirely outside U.S. jurisdiction, and we have not identified any unoccupied areas in the U.S. that are currently essential to the conservation of any of these species.

DATES: This final rule is effective July 2, 2014.

ADDRESSES: Chief, Endangered Species Division, NMFS Office of Protected Resources (F/PR3), 1315 East West Highway, Silver Spring, MD 20910, USA.

FOR FURTHER INFORMATION CONTACT: Dr. Dwayne Meadows, NMFS, Office of Protected Resources, (301) 427–8403.

SUPPLEMENTARY INFORMATION:

Background

On March 12, 2012, we received a petition from the WildEarth Guardians and Friends of Animals to list 15 species of sturgeon (*Acipenser naccarii*—Adriatic sturgeon; *A. sturio*—European sturgeon; *A. gueldenstaedtii*—Russian sturgeon; *A. nudiventris*—ship sturgeon/bastard sturgeon/fringebarbel sturgeon/spiny sturgeon/thorn sturgeon; *A. persicus*—Persian sturgeon; *A. stellatus*—stellate sturgeon/star sturgeon; *A. baerii*—Siberian sturgeon; *A. dabryanus*—Yangtze sturgeon/Dabry's sturgeon/river sturgeon; *A. sinensis*—Chinese sturgeon; *A. mikadoi*—Sakhalin sturgeon; *A. schrenckii*—Amur sturgeon; *Huso dauricus*—Kaluga sturgeon; *Pseudoscaphirhynchus fedtschenkoi*—Syr-darya shovelnose sturgeon/Syr darya sturgeon; *P. hermanni*—dwarf sturgeon/Little Amu-darya shovelnose/little shovelnose sturgeon/Small Amu-dar shovelnose sturgeon; *P. kaufmanni*—false shovelnose sturgeon/Amu darya shovelnose sturgeon/Amu darya sturgeon/big Amu darya shovelnose/large Amu-dar shovelnose sturgeon/shovelfish) as threatened or endangered under the Endangered Species Act (ESA). As a result of subsequent discussions between us and the U.S. Fish and Wildlife Service (FWS), we determined that 10 of the 15 petitioned sturgeon species are not marine or anadromous. Therefore FWS is conducting the required listing analyses for those 10 species and NMFS is making the determinations for the five anadromous species, *Acipenser naccarii, A. sturio, A. sinensis, A. mikadoi* and *Huso dauricus.* On August 27, 2012, we published a 90-day finding in the **Federal Register** (77 FR 51767) that found that listing these five species under the ESA may be warranted, and announced the initiation of status reviews for each species. Based on information we gathered during the status review, we proposed listing all five species as endangered on October 31, 2013 (78 FR 65249).

We are responsible for determining whether species are threatened or endangered under the ESA (16 U.S.C. 1531 *et seq.*). To make this determination, we first consider whether a group of organisms constitutes a ''species'' under the ESA, then whether the status of the species qualifies it for listing as either threatened or endangered. Section 3 of the ESA defines a ''species'' as ''any subspecies of fish or wildlife or plants, and any distinct population segment of any species of vertebrate fish or wildlife which interbreeds when mature.'' Section 3 of the ESA further defines an endangered species as ''any species which is in danger of extinction throughout all or a significant portion of its range'' and a threatened species as one ''which is likely to become an endangered species within the foreseeable future throughout all or a significant portion of its range.'' We interpret an ''endangered species'' to be one that is presently in danger of extinction. A ''threatened species,'' on the other hand, is not presently in danger of extinction, but is likely to become so in the foreseeable future (that is, at a later time). In other words, the primary statutory difference between a threatened and endangered species is the timing of when a species may be in danger of extinction, either presently (endangered) or in the foreseeable future (threatened). Section 4(a)(1) of the ESA requires us to determine whether any species is endangered or threatened due to any one or a combination of the following five threat factors: (1) The present or threatened destruction, modification, or curtailment of its habitat or range; (2) overutilization for commercial, recreational, scientific, or educational purposes; (3) disease or predation; (4) the inadequacy of existing regulatory mechanisms; or (5) other natural or manmade factors affecting its continued existence. We are required to make listing determinations based solely on the best scientific and commercial data available after conducting a review of the species' status and after taking into account efforts being made by any state or foreign nation to protect the species.

In making listing determinations for these five species, we first determined whether each petitioned species meets the ESA definition of a ''species.'' Next, using the best available information gathered during the status reviews, we completed an extinction risk assessment. We then assessed the threats affecting the status of each species using the five listing factors identified in section 4(a)(1) of the ESA.

Once we determined the threats, we assessed efforts being made to protect the species to determine if these conservation efforts are adequate to mitigate the existing threats. We evaluate conservation efforts using the

criteria outlined in the joint NMFS/FWS Policy for Evaluating Conservation Efforts (PECE) (68 FR 15100; March 28, 2003) to determine their certainty of implementation and effectiveness for future or not yet fully implemented conservation efforts. Finally, we re-assessed the extinction risk of each species in light of the existing conservation efforts.

Public Comment

We note that at least one commenter provided information about the status review as well as proposed listing. Where that information was relevant to the proposed listing, we considered it and discussed it in this final rule. If it was relevant to the status review alone, we addressed that by preparing an updated status review.

In the solicitation for information from the public on the proposed rule we received information and/or comments from five parties. We also received comments from seven foreign countries as part of our foreign consultation solicitation; none took a position on whether the species should be listed. A scientific reviewer provided a citation to recent work on genetic diversity of paleontological specimens of European sturgeon and unpublished recent sightings of juvenile European sturgeon in nearshore waters near the mouth of the Gironde River in France. We incorporated that information in the updated status review and considered it in our final listing determination.

Stocking

Two commenters provided views on the role of stocking and releasing animals cultured in captivity to assist in conservation efforts. The World Sturgeon Conservation Society (WSCS) argued that listing may adversely impact stocking, which they argue provides conservation benefits by increasing population size of endangered species. The petitioner argued and provided literature references that stocking programs may create unsustainable demand for founder stocks from the wild that ultimately hurt conservation efforts. None of the literature provided addressed sturgeon stocking programs. While we agree that stocking fish into the wild can be an effective conservation strategy when risks such as genetic integrity and diversity, disease, and effects on source populations are considered, we received no additional specific information on the threats or benefits of stocking to any of the proposed species that would alter our status assessments, and make no changes in the listing determination.

International Trade

Two commenters provided information on the effect of commercial trade in the proposed species on their conservation. The WSCS suggested commercial use of these species could help fund conservation efforts to improve the status of these species. WSCS argued that an endangered listing would harm caviar trade. They asserted that caviar trade from aquacultured sources reduces pressure on wild sources and reduces prices for wild-sourced product. In contrast, the petitioner provided comments and references arguing that legal commercial trade would hurt the conservation status of these species by providing cover for illegal trade, by confusing consumers ''by sending a signal that these species are no longer endangered, or it may reduce the stigma'' associated with these species, and/or by increasing demand for wild animals. We believe the effect of trade on conservation of endangered species is a complex issue, as the few studies on other species provide conflicting results. We are not aware of any studies documenting whether trade in sturgeon furthers conservation efforts. Neither commenter, nor any other commenter, provided any new data on trade in any of the proposed species that we had not already considered. In addition, the commenter provided no information regarding conservation efforts that we could evaluate under PECE. We note that we are required to make ESA listing decisions based on the best available scientific and commercial data. While under PECE we consider whether other types of conservation approaches or actions render ESA listing unnecessary, once we have determined to list a species based on consideration of the statutory criteria we consider other conservation actions in later actions, such as during the recovery planning process. We make no change in the listing determination as a result of these comments.

Other Comments

The WSCS expressed concern that a regulatory ESA listing would be ineffective as the United States has little jurisdiction or ability to effect conservation in the range states of the proposed species and would be better able to assist conservation efforts voluntarily and that listing was inappropriate. We agree that the United States has limited jurisdiction in the range states of the proposed species, but note that the ability of the United States to take action subsequent to listing is not one of the statutory criteria for listing. As noted above, the ESA only allows us to consider the best available scientific and commercial information in making listing decisions. Nevertheless, we intend to engage in voluntary efforts to assist range states in the conservation of these species.

The Florida Sturgeon Production Working Group, an aquaculture advisory body to the state of Florida, noted that Florida sturgeon farmers are currently growing Atlantic sturgeon (*Acipenser oxyrhynchus oxyrhynchus*), which are closely related to the proposed European sturgeon (*A. sturio*). They are concerned that there might be future taxonomic changes affecting the definition and taxonomy of these two species. They requested we provide ''a means to distinguish'' the two species in the final rule. We appreciate the concerns of the working group. However, it is not possible for us to anticipate potential taxonomic changes at this time. We note that U.S. DPSs of Atlantic sturgeon are currently listed under the ESA as either endangered or threatened. Should new scientific agreement changing the taxonomy of either of these species occur, we would likely need to clarify or modify our sturgeon listings based on the best available scientific information at that time. In order to do so, we would need to comply with applicable procedural requirements of the Endangered Species Act.

The petitioner also provided comments relative to the legal status and trade of animals in captivity prior to listing. We agree there was some confusing language in the proposed rule regarding actions that would not be considered prohibited take under section 9 with regard to commercial trade where we also discussed other ESA authorities. Section 9(b)(1) of the ESA says that captive specimens of listed species that were in captivity at the time of listing are not subject to the requirements of Section 9(a)(1)(A) or 9(a)(1)(G) of the Act (that prohibit import/export and require adherence to any additional protective regulations promulgated for the species) provided that such holding and any subsequent holding or use of the captive fish is not in the course of commercial activity. So that this is clear, in this final rule we did not include the sentence, ''Any interstate and foreign commerce trade of sturgeon already in captivity.'' in the section identifying activities that are not likely to result in a violation of section 9.

Status Reviews

In order prepare the status reviews, we compiled information on the species

biology, ecology, life history, threats, and conservation status from information contained in the petition, our files, a comprehensive literature search, and consultation with known experts. We updated the status reviews based on information submitted by peer reviewers, foreign governments, and the public. This information is available in the updated status review report (Meadows and Coll, 2014) available on our Web site (*http://www.nmfs.noaa.gov/pr*).

Sturgeon General Species Description

Sturgeons are bony fishes most closely related to paddlefishes and bichirs. They all have cartilaginous skeletons, heterocercal caudal fins (upper lobe is larger than the lower lobe), one spiracle respiratory opening (like sharks), and unique ganoid scales. In sturgeons, these ganoid scales remain only as the five rows of bony ''scutes'' on the sides of the body. They all have a bottom-oriented mouth with four barbels (sensory ''whiskers''), a flat snout and strong rounded body. Sturgeons have an electrosensory system similar to that in sharks, which they use for feeding. All of these species seasonally migrate into rivers to spawn. They are mostly bottom-oriented feeders that are normally generalist predators on benthic prey, including various invertebrates and fishes, except *H. dauricus,* which is more piscivorous. The proposed rule (78 FR 65249, October 31, 2013) summarizes general background information on the five species' natural history, range, reproduction, population structure, distribution and abundance; none of which has changed since the proposed rule. All of that information is incorporated herein by reference.

Species Determinations

Based on the best available scientific and commercial information described above and in the updated status review report (Meadows and Coll, 2014), we have determined that *Acipenser naccarii, A. sturio, A. sinensis, A. mikadoi* and *Huso dauricus* are taxonomically-distinct species and therefore meet the definition of ''species'' pursuant to section 3 of the ESA and are eligible for listing under the ESA.

Extinction Risk

None of the information we received from peer reviewers and public comment affected the status of any of the five sturgeons, so our extinction risk evaluation remains the same as in the original status review report (Meadows and Coll, 2013) and proposed rule (78 FR 65249, October 31, 2013). The extinction risk analysis team found all five species to be at high risk of extinction in the present, with median votes for each team member at or above 80 percent probability of being currently in danger of extinction for each species. After reviewing the best available scientific data and the extinction risk evaluation on the five species of sturgeon, we continue to concur with the findings of the extinction risk analysis team and conclude that the risk of extinction for all five species of sturgeon is currently high.

Summary of Factors Affecting the Five Species of Sturgeon

Next we consider whether any one or a combination of the five threat factors specified in section 4(a)(1) of the ESA are contributing to the extinction risk of these five sturgeons. Since the proposed rule was published, we have received no new information relevant to four of the section 4(a)(1) factors: Of destruction or modification of habitat, overutilization, disease or other factor through the public comment process or our own research for any of the five species. We incorporate the discussion of these four factors from the proposed rule (78 FR 65249, October 31, 2013) by reference herein.

We did receive additional information regarding foreign regulatory measures related to *A. naccarii* and *A. sturio* from Bosnia and Herzegovina, Greece, and the United Kingdom. *Acipenser naccarii* is listed in Bosnia and Herzegovina as endangered under the Law on Nature protection which is a ''red list'' of species. In Greece it is protected under Presidential Decree 67/1981 and Joint Ministerial Decision No. 33318/3028/11–12–1998 (B' 1289). The current range of this species does not include these countries and the protections have not prevented its decline, so this additional information does not affect our conclusion in the proposed rule regarding the adequacy of regulatory measures for this species.

The same protective laws in Bosnia and Herzegovina and Greece also apply to *A. sturio.* In addition, the United Kingdom provided information on its regulatory measures. They have implemented the European Council Directive on the Conservation of Natural Habitats and of Wild Fauna and Flora into national law under the Conservation of Habitats and Species Regulation (2010). The species is also protected in the United Kingdom under Schedule 5 of the Wildlife and Countryside Act 1981 (as amended) as well as being listed separately under two pieces of legislation at a country level. In England it is listed under the Natural Environment and Rural Communities Act (2006) (section 41) as a species ''of principal importance for the purpose of conserving biodiversity'', whilst in Scotland it is listed under the Scottish Biodiversity List (2005), which is a list of flora, fauna and habitats considered to be of principal importance for biodiversity conservation. The current range of this species does not include Bosnia and Herzegovina and Greece, and the species is only irregularly and anecdotally seen in the United Kingdom (Sheena Hynd, personal communication) and the protections have not prevented its decline, so this additional information does not affect our conclusion in the proposed rule regarding the adequacy of regulatory measures for this species.

Overall Risk Summary

After considering the status, threats and extinction risks for each of the five species of sturgeon, we have determined that *Acipenser naccarii, A. sturio, A. sinensis, A. mikadoi* and *Huso dauricus* are in danger of extinction throughout all of their ranges, largely due to (1) present or threatened destruction, modification or curtailment of habitat, (2) overutilization for commercial, recreational, scientific, or educational purposes, and (3) inadequacy of existing regulatory mechanisms.

Protective Efforts

Section 4(b)(1)(A) of the ESA requires the Secretary, when making a listing determination for a species, to take into consideration those efforts, if any, being made by any State or foreign nation to protect the species. In judging the efficacy of not yet implemented efforts, or those existing protective efforts that are not yet fully effective, we rely on the Services' joint ''Policy for Evaluation of Conservation Efforts When Making Listing Decisions'' (''PECE''; 68 FR 15100; March 28, 2003). The PECE policy is designed to ensure consistent and adequate evaluation of whether any conservation efforts that have been recently adopted or implemented, but not yet proven to be successful, will result in recovering the species to the point at which listing is not warranted or contribute to forming the basis for listing a species as threatened rather than endangered. The PECE policy is expected to facilitate the development of conservation efforts that sufficiently improve a species' status so as to make listing the species as threatened or endangered unnecessary.

The PECE policy establishes two basic criteria to use in evaluating efforts

identified in conservations plans, conservation agreements, management plans or similar documents: (1) The certainty that the conservation efforts will be implemented; and (2) the certainty that the efforts will be effective. We evaluated conservation efforts we are aware of to protect and recover the five sturgeon species that are either underway but not yet fully implemented, or are only planned. We sought additional information on other conservation efforts in our public comment process at the proposed rule stage, but received no information on additional projects. See the proposed rule (78 FR 65249, October 31, 2013) to review the conservation efforts we are aware of and considered in this listing determination. We note here our response above to the contrasting public comments either supporting or highlighting the risks of stocking efforts. We have no evidence that specific stocking efforts are harming the five sturgeon species, or conversely, that they met the PECE policy criteria of certainty of implementation or effectiveness to be considered a factor to mitigate extinction risk. Therefore, we conclude that the identified conservation efforts do not alter the extinction risk assessments for any of the five sturgeon species.

Final Determination

Section 4(b)(1) of the ESA requires that we make listing determinations based solely on the best scientific and commercial data available after conducting a review of the status of the species and taking into account those efforts, if any, being made by any state or foreign nation, or political subdivisions thereof, to protect and conserve the species. We have reviewed the best available scientific and commercial information, including the petition, the information in the report of the review of the status of the five species of sturgeon, public comment, and the comments of peer reviewers. We are responsible for determining whether *Acipenser naccarii* (Adriatic sturgeon), *A. sturio* (European sturgeon), *A. sinensis* (Chinese sturgeon), *A. mikadoi* (Sakhalin sturgeon) and *Huso dauricus* (Kaluga sturgeon) are threatened or endangered under the ESA (16 U.S.C. 1531 *et seq.*). Accordingly, we have followed a stepwise approach as outlined above in making this listing determination for these five species of sturgeon. We have determined that *Acipenser naccarii* (Adriatic sturgeon), *A. sturio* (European sturgeon), *A. sinensis* (Chinese sturgeon), *A. mikadoi* (Sakhalin sturgeon) and *Huso dauricus* (Kaluga sturgeon) constitute species as defined by the ESA.

Based on the information presented, we find that all five species of sturgeon are in danger of extinction throughout all of their ranges. We assessed the ESA section 4(a)(1) factors and conclude the Adriatic, European, Chinese, Sakhalin and Kaluga sturgeon all face ongoing threats from habitat alteration, overutilization for commercial and recreational purposes, and the inadequacy of existing regulatory mechanisms throughout their ranges. *Acipenser sturio* also face high risks from its life history and published predictions of the effects of climate change (Lassalle *et al.,* 2011). All of the threats attributed to the species' decline are ongoing except the largely historical threat from directed fisheries. After considering efforts being made to protect these sturgeon, we could not conclude that the proposed conservation efforts would alter the extinction risk for any of these five species. Therefore, we are listing each of these five species as endangered.

Effects of Listing

Conservation measures provided for species listed as endangered under the ESA include recovery actions (16 U.S.C. 1533(f)), concurrent designation of critical habitat if prudent and determinable (16 U.S.C. 1533(a)(3)(A)); Federal agency requirements to consult with NMFS under Section 7 of the ESA to ensure their actions do not jeopardize the species or result in adverse modification or destruction of critical habitat should it be designated (16 U.S.C. 1536); and prohibitions on taking (16 U.S.C. 1538). Recognition of the species' plight through listing promotes conservation actions by Federal and state agencies, foreign entities, private groups, and individuals. The main effects of this proposed listing are prohibitions on take, including export and import.

Identifying Section 7 Consultation Requirements

Section 7(a)(2) (16 U.S.C. 1536(a)(2)) of the ESA and NMFS/USFWS regulations require Federal agencies to consult with us to ensure that activities they authorize, fund, or carry out are not likely to jeopardize the continued existence of listed species or destroy or adversely modify critical habitat. It is possible that the listing of the five species of sturgeon under the ESA may create a minor increase in the number of section 7 consultations, though consultations are likely to be rare given that these species mostly occur in foreign territorial waters.

Critical Habitat

Critical habitat is defined in section 3 of the ESA (16 U.S.C. 1532(5)) as: (1) The specific areas within the geographical area occupied by a species, at the time it is listed in accordance with the ESA, on which are found those physical or biological features (a) essential to the conservation of the species and (b) that may require special management considerations or protection; and (2) specific areas outside the geographical area occupied by a species at the time it is listed upon a determination that such areas are essential for the conservation of the species. ''Conservation'' means the use of all methods and procedures needed to bring the species to the point at which listing under the ESA is no longer necessary. Section 4(a)(3)(A) of the ESA (16 U.S.C. 1533(a)(3)(A)) requires that, to the extent prudent and determinable, critical habitat be designated concurrently with the listing of a species. However, critical habitat shall not be designated in foreign countries or other areas outside U.S. jurisdiction (50 CFR 424.12(h)).

The best available scientific and commercial data as discussed above identify the geographical areas occupied by *Acipenser naccarii, A. sturio, A. sinensis, A. mikadoi* and *Huso dauricus* as being entirely outside U.S. jurisdiction, so we cannot designate critical habitat for these species. We can designate critical habitat in unoccupied areas in the United States if the area(s) are determined by the Secretary to be essential for the conservation of the species. Regulations at 50 CFR 424.12(e) specify that we shall designate as critical habitat areas outside the geographical range presently occupied by the species only when the designation limited to its present range would be inadequate to ensure the conservation of the species.

The best available scientific and commercial information on these species does not indicate that U.S. waters provide any specific essential biological function for any of them. Based on the best available information, we have not identified unoccupied area(s) that are currently essential to the conservation of any of the sturgeons proposed for listing. Therefore, based on the available information, we do not intend to designate critical habitat for *Acipenser naccarii, A. sturio, A. sinensis, A. mikadoi* or *Huso dauricus.*

Identification of Those Activities That Would Constitute a Violation of Section 9 of the ESA

On July 1, 1994, NMFS and FWS published a policy (59 FR 34272) that requires us to identify, to the maximum extent practicable at the time a species is listed, those activities that would or would not constitute a violation of section 9 of the ESA. Because we are listing all five sturgeons as endangered, all of the prohibitions of Section 9(a)(1) of the ESA will apply to all five species. These include prohibitions against the import, export, use in foreign commerce, or ''take'' of the species. Take is defined as ''to harass, harm, pursue, hunt, shoot, wound, kill, trap, capture, or collect, or to attempt to engage in any such conduct.'' These prohibitions apply to all persons subject to the jurisdiction of the United States, including in the United States, its territorial sea, or on the high seas. The intent of this policy is to increase public awareness of the effects of this listing on proposed and ongoing activities within the species' range. Activities that we believe could result in a violation of section 9 prohibitions of these five sturgeons include, but are not limited to, the following:

(1) Take within the United States or its territorial sea, or upon the high seas;

(2) Possessing, delivering, transporting, or shipping any sturgeon part;

(3) Delivering, receiving, carrying, transporting, or shipping in interstate or foreign commerce any sturgeon or sturgeon part, in the course of a commercial activity;

(4) Selling or offering for sale in interstate commerce any part, except antique articles at least 100 years old;

(5) Importing or exporting sturgeon or any sturgeon part to or from any country;

(6) Releasing captive sturgeon into the wild. Although sturgeon held non-commercially in captivity at the time of listing are exempt from certain prohibitions, the individual animals are considered listed and afforded most of the protections of the ESA, including most importantly, the prohibition against injuring or killing. Release of a captive animal has the potential to injure or kill the animal. Of an even greater conservation concern, the release of a captive animal has the potential to affect wild populations of native sturgeon through introduction of diseases or inappropriate genetic mixing;

(7) Harming captive sturgeon by, among other things, injuring or killing a captive sturgeon, through experimental or potentially injurious veterinary care or conducting research or breeding activities on captive sturgeon, outside the bounds of normal animal husbandry practices. Captive breeding of sturgeon is considered experimental and potentially injurious. Furthermore, the production of sturgeon progeny has conservation implications (both positive and negative) for wild populations. Experimental or potentially injurious veterinary procedures and research or breeding activities of sturgeon may, depending on the circumstances, be authorized under an ESA 10(a)(1)(A) permit for scientific research or the enhancement of the propagation or survival of the species.

Although not binding, we consider the following actions, depending on the circumstances, as not being prohibited by ESA Section 9:

(1) Take of a sturgeon authorized by an ESA section 10(a)(1)(A) permit authorized by, and carried out in accordance with the terms and conditions of an ESA section 10(a)(1)(A) permit issued by NMFS for purposes of scientific research or the enhancement of the propagation or survival of the species;

(2) Continued possession of sturgeon parts that were in possession at the time of listing. Such parts may be non-commercially exported or imported; however the importer or exporter must be able to provide evidence to show that the parts meet the criteria of ESA section 9(b)(1) (i.e., held in a controlled environment at the time of listing, in a non-commercial activity);

(3) Continued possession of live sturgeon that were in captivity or in a controlled environment (e.g., in aquaria) at the time of this listing, so long as the prohibitions under ESA section 9(a)(1) are not violated. Facilities must provide evidence that the sturgeon were in captivity or in a controlled environment prior to listing. We suggest such facilities submit information to us on the sturgeon in their possession (e.g., size, age, description of animals, and the source and date of acquisition) to establish their claim of possession (see For Further Information Contact); and

(4) Provision of care for live sturgeon that were in captivity at the time of listing. These individuals are still protected under the ESA and may not be killed or injured, or otherwise harmed, and, therefore, must receive proper care. Normal care of captive animals necessarily entails handling or other manipulation of the animals, and we do not consider such activities to constitute take or harassment of the animals so long as adequate care, including veterinary care, such as confining, tranquilizing, or anesthetizing sturgeon when such practices, procedures, or provisions are not likely to result in injury, is provided.

Role of Peer Review

In December 2004, the Office of Management and Budget (OMB) issued a Final Information Quality Bulletin for Peer Review establishing a minimum peer review standard. Similarly, a joint NMFS/FWS policy (59 FR 34270; July 1, 1994) requires us to solicit independent expert review from qualified specialists, concurrent with the public comment period. The intent of the peer review policy is to ensure that listings are based on the best scientific and commercial data available. We solicited peer review comments on the status review report and the scientific or commercial data or assumptions related to the information considered for listing from 12 outside scientists and two NMFS scientists familiar with sturgeons. After publication of the proposed rule and status report, we received additional comments from one scientist. We incorporated these additional comments into the updated status review report and this final rule. We conclude that these experts' reviews satisfy the requirements for ''adequate [prior] peer review'' contained in the Bulletin (sec. II.2.) as well as the joint policy.

References

A complete list of the references used in this final rule is available upon request (see **ADDRESSES**).

Classification

National Environmental Policy Act

The 1982 amendments to the ESA, in section 4(b)(1)(A), restrict the information that may be considered when assessing species for listing. Based on this limitation of criteria for a listing decision and the opinion in *Pacific Legal Foundation* v. *Andrus,* 675 F. 2d 825 (6th Cir. 1981), NMFS has concluded that ESA listing actions are not subject to the environmental assessment requirements of the National Environmental Policy Act (NEPA) (See NOAA Administrative Order 216–6).

Executive Order 12866, Regulatory Flexibility Act, and Paperwork Reduction Act

As noted in the Conference Report on the 1982 amendments to the ESA, economic impacts cannot be considered when assessing the status of a species. Therefore, the economic analysis requirements of the Regulatory Flexibility Act are not applicable to the listing process. In addition, this final rule is exempt from review under

Executive Order 12866. This final rule does not contain a collection-of-information requirement for the purposes of the Paperwork Reduction Act.

Executive Order 13132, Federalism

In accordance with E.O. 13132, we determined that this final rule does not have significant Federalism effects and that a Federalism assessment is not required.

List of Subjects in 50 CFR Part 224

Administrative practice and procedure, Endangered and threatened species, Exports, Imports, Reporting and record keeping requirements, Transportation.

Dated: May 23, 2014.

Samuel D. Rauch III,

Deputy Assistant Administrator for Regulatory Programs, National Marine Fisheries Service.

For the reasons set out in the preamble, 50 CFR part 224 is amended as follows:

PART 224—ENDANGERED MARINE AND ANADROMOUS SPECIES

■ 1. The authority citation for part 224 continues to read as follows:

Authority: 16 U.S.C. 1531–1543 and 16 U.S.C 1361 *et seq.*

■ 2. In § 224.101, paragraph (h), add new entries for five species under the ''Fishes'' section in alphabetical order as follows:

§ 224.101 Enumeration of endangered marine and anadromous species.

* * * * *

(h) The endangered species under the jurisdiction of the Secretary of Commerce are:

Species [1]			Citation(s) for listing determination(s)	Critical habitat	ESA Rules
Common name	Scientific name	Description of listed entity			
*	*	*	*	*	*
Fishes					
*	*	*	*	*	*
Sturgeon, Adriatic	*Acipenser naccarii*	Entire species	[Insert **Federal Register** page number where the document begins], June 2, 2014.	NA	NA
*	*	*	*	*	*
Sturgeon, Chinese	*Acipenser sinensis*	Entire species	[Insert **Federal Register** page number where the document begins], June 2, 2014.	NA	NA
Sturgeon, European	*Acipenser sturio*	Entire species	[Insert **Federal Register** page number where the document begins], June 2, 2014.	NA	NA
Sturgeon, Kaluga	*Huso dauricus*	Entire species	[Insert **Federal Register** page number where the document begins], June 2, 2014.	NA	NA
Sturgeon, Sakhalin	*Acipenser mikadoi*	Entire species	[Insert **Federal Register** page number where the document begins], June 2, 2014.	NA	NA
*	*	*	*	*	*

[1] Species includes taxonomic species, subspecies, distinct population segments (DPSs) (for a policy statement, see 61 FR 4722, February 7, 1996), and evolutionarily significant units (ESUs) (for a policy statement, see 56 FR 58612, November 20, 1991).

* * * * *

[FR Doc. 2014–12626 Filed 5–30–14; 8:45 am]

BILLING CODE 3510–22–P

DEPARTMENT OF COMMERCE

National Oceanic and Atmospheric Administration

50 CFR Part 635

[Docket No. 130402317–3966–02]

RIN 0648–XD312

Atlantic Highly Migratory Species; Commercial Gulf of Mexico Blacktip Shark Fishery

AGENCY: National Marine Fisheries Service (NMFS), National Oceanic and Atmospheric Administration (NOAA), Commerce.

ACTION: Temporary rule; closure.

SUMMARY: NMFS is closing the commercial blacktip shark fishery in the Gulf of Mexico region. This action is necessary because projections indicate that the commercial landings of Gulf of Mexico blacktip sharks for the 2014 fishing season could reach 80 percent of the available commercial quota as of June 3, 2014.

DATES: Commercial Gulf of Mexico blacktip shark fishery is closed effective 11:30 p.m. local time June 2, 2014, until the end of the 2014 fishing season on December 31, 2014, or until and if NMFS announces via a notice in the

Federal Register that additional quota is available and the season is reopened.

FOR FURTHER INFORMATION CONTACT: Karyl Brewster-Geisz or Alexis Jackson 301–427–8503; fax 301–713–1917.

SUPPLEMENTARY INFORMATION: The Atlantic shark fisheries are managed under the 2006 Consolidated Highly Migratory Species (HMS) Fishery Management Plan (FMP), its amendments, and its implementing regulations (50 CFR part 635) issued under authority of the Magnuson-Stevens Fishery Conservation and Management Act (16 U.S.C. 1801 *et seq.*).

Under § 635.5(b)(1), dealers must electronically submit reports on sharks that are first received from a vessel on a weekly basis through a NMFS-approved electronic reporting system, received by NMFS no later than midnight, local time, on the first Tuesday following the end of the reporting week unless the dealer is otherwise notified by NMFS. Under § 635.28(b)(2), when NMFS calculates that the landings for any species and/or management group of a linked group have reached or are projected to reach 80 percent of the available quota, NMFS will file for publication with the Office of the Federal Register a notice of closure for all of the species and/or management groups in a linked group that will be effective no fewer than 5 days from date of filing. From the effective date and time of the closure until and if NMFS announces, via a notice in the **Federal Register**, that additional quota is available and the season is reopened, the fishery for all linked species and/or management groups is closed, even across fishing years.

On July 3, 2013 (78 FR 40318), NMFS announced the final rule for Amendment 5a to the 2006 Consolidated HMS FMP, which, among other things, established a new quota for aggregated large coastal sharks (LCS), hammerhead sharks, and blacktip sharks in the Gulf of Mexico region and linked the Gulf of Mexico aggregated LCS and Gulf of Mexico hammerhead shark management groups. Because the blacktip shark quota is not linked to either the aggregated LCS or hammerhead shark quotas, it was not closed along with the aggregated LCS and hammerhead management groups on May 20, 2014 (79 FR 28849; May 20, 2014).

On November 26, 2013 (78 FR 70500), NMFS announced that the commercial Gulf of Mexico blacktip shark quota for 2014 was 274.3 metric tons (mt) dressed weight (604,626 lb dw). Dealer reports received through May 20, 2014, indicate that 180.5 mt dw or 66 percent of the available Gulf of Mexico blacktip shark quota has been landed. Based on projections, NMFS estimates that the 80-percent limit could be exceeded by June 3, 2014, or earlier. Accordingly, NMFS is closing the blacktip shark fishery in the Gulf of Mexico region as of 11:30 p.m. local time June 2, 2014.

At § 635.27(b)(1), the boundary between the Gulf of Mexico region and the Atlantic region is defined as a line beginning on the East Coast of Florida at the mainland at 25°20.4′ N. lat, proceeding due east. Any water and land to the south and west of that boundary is considered for the purposes of monitoring and setting quotas, to be within the Gulf of Mexico region.

During the closure, retention of blacktip sharks in the Gulf of Mexico region is prohibited for persons fishing aboard vessels issued a commercial shark limited access permit under § 635.4. However, persons aboard a commercially permitted vessel that is also properly permitted to operate as a charter vessel or headboat for HMS and is engaged in a for-hire trip could fish under the recreational retention limits for sharks and ''no sale'' provisions (§ 635.22(a) and (c)). Similarly, persons aboard a commercially permitted vessel that possesses a valid shark research permit under § 635.32 and has a NMFS-approved observer onboard may continue to harvest and sell blacktip sharks in the Gulf of Mexico region pursuant to the terms and conditions of the shark research permit.

During this closure, a shark dealer issued a permit pursuant to § 635.4 may not purchase or receive blacktip sharks in the Gulf of Mexico region from a vessel issued an Atlantic Shark Limited Access Permit (LAP), except that a permitted shark dealer or processor may possess blacktip sharks in the Gulf of Mexico region that were harvested, off-loaded, and sold, traded, or bartered prior to the effective date of the closure and were held in storage consistent with § 635.28(b)(5). Additionally, a permitted shark dealer or processor may possess blacktip sharks in the Gulf of Mexico region that were harvested by a vessel issued a valid shark research fishery permit per § 635.32 with a NMFS-approved observer onboard during the trip the sharks were harvested as long as the LCS research fishery quota remains open. Similarly, a shark dealer issued a permit pursuant to § 635.4 may, in accordance with relevant state regulations, purchase or receive blacktip sharks in the Gulf of Mexico region if the sharks were harvested, off-loaded, and sold, traded, or bartered from a vessel that fishes only in state waters and that has not been issued an Atlantic Shark LAP, HMS Angling permit, or HMS Charter/Headboat permit pursuant to § 635.4.

Classification

Pursuant to 5 U.S.C. 553(b)(B), the Assistant Administrator for Fisheries, NOAA (AA), finds that providing prior notice and public comment for this action is impracticable and contrary to the public interest because the fishery is currently underway and any delay in this action would result in overharvest of the quota and be inconsistent with management requirements and objectives. Similarly, affording prior notice and opportunity for public comment on this action is contrary to the public interest because if the quota is exceeded, the stock may be negatively affected and fishermen ultimately could experience reductions in the available quota and a lack of fishing opportunities in future seasons. For these reasons, the AA also finds good cause to waive the 30-day delay in effective date pursuant to 5 U.S.C. 553(d)(3). This action is required under § 635.28(b)(2) and is exempt from review under Executive Order 12866.

Authority: 16 U.S.C. 1801 *et seq.*

Dated: May 27, 2014.

Emily H. Menashes,

Acting Director, Office of Sustainable Fisheries, National Marine Fisheries Service.

[FR Doc. 2014–12670 Filed 5–28–14; 4:15 pm]

BILLING CODE 3510–22–P

Proposed Rules

Federal Register
Vol. 79, No. 105
Monday, June 2, 2014

This section of the FEDERAL REGISTER contains notices to the public of the proposed issuance of rules and regulations. The purpose of these notices is to give interested persons an opportunity to participate in the rule making prior to the adoption of the final rules.

DEPARTMENT OF TRANSPORTATION

Federal Aviation Administration

14 CFR Part 39

[Docket No. FAA–2014–0333; Directorate Identifier 2013–SW–025–AD]

RIN 2120–AA64

Airworthiness Directives; Airbus Helicopters (Previously Eurocopter France) (Airbus Helicopters) Helicopters

AGENCY: Federal Aviation Administration (FAA), DOT.

ACTION: Notice of proposed rulemaking (NPRM).

SUMMARY: We propose to adopt a new airworthiness directive (AD) for Airbus Helicopters Model EC225LP, AS332C, AS332L, AS332L1, and AS332L2 helicopters. This proposed AD would require inspecting each TECALEMIT flexible hydraulic hose (hose) installed in the main gearbox (MGB) compartment and replacing the hose if a crack, cut, or other damage exists. This proposed AD is prompted by reports about the loss of in-flight hydraulic pressure on Eurocopter helicopters. The proposed actions are intended to prevent loss of the hydraulic system and consequently, loss of helicopter control.

DATES: We must receive comments on this proposed AD by August 1, 2014.

ADDRESSES: You may send comments by any of the following methods:

- *Federal eRulemaking Docket:* Go to *http://www.regulations.gov.* Follow the online instructions for sending your comments electronically.
- *Fax:* 202–493–2251.
- *Mail:* Send comments to the U.S. Department of Transportation, Docket Operations, M–30, West Building Ground Floor, Room W12–140, 1200 New Jersey Avenue SE., Washington, DC 20590–0001.
- *Hand Delivery:* Deliver to the ''Mail'' address between 9 a.m. and 5 p.m., Monday through Friday, except Federal holidays.

Examining the AD Docket

You may examine the AD docket on the Internet at *http://www.regulations.gov* or in person at the Docket Operations Office between 9 a.m. and 5 p.m., Monday through Friday, except Federal holidays. The AD docket contains this proposed AD, the European Aviation Safety Agency (EASA) AD, the economic evaluation, any comments received, and other information. The street address for the Docket Operations Office (telephone 800–647–5527) is in the **ADDRESSES** section. Comments will be available in the AD docket shortly after receipt.

For service information identified in this proposed AD, contact Airbus Helicopters, Inc., 2701 N. Forum Drive, Grand Prairie, TX 75052; telephone (972) 641–0000 or (800) 232–0323; fax (972) 641–3775; or at *http://www.airbushelicopters.com/techpub.* You may review the referenced service information at the FAA, Office of the Regional Counsel, Southwest Region, 2601 Meacham Blvd., Room 663, Fort Worth, Texas 76137.

FOR FURTHER INFORMATION CONTACT: Rao Edupuganti, Aviation Safety Engineer, Safety Management Group, Rotorcraft Directorate, FAA, 2601 Meacham Blvd., Fort Worth, Texas 76137; telephone (817) 222–5110; email *rao.edupuganti@faa.gov.*

SUPPLEMENTARY INFORMATION:

Comments Invited

We invite you to participate in this rulemaking by submitting written comments, data, or views. We also invite comments relating to the economic, environmental, energy, or federalism impacts that might result from adopting the proposals in this document. The most helpful comments reference a specific portion of the proposal, explain the reason for any recommended change, and include supporting data. To ensure the docket does not contain duplicate comments, commenters should send only one copy of written comments, or if comments are filed electronically, commenters should submit only one time.

We will file in the docket all comments that we receive, as well as a report summarizing each substantive public contact with FAA personnel concerning this proposed rulemaking. Before acting on this proposal, we will consider all comments we receive on or before the closing date for comments. We will consider comments filed after the comment period has closed if it is possible to do so without incurring expense or delay. We may change this proposal in light of the comments we receive.

Discussion

EASA, which is the Technical Agent for the Member States of the European Union, has issued EASA AD No. 2013–0069, dated March 18, 2013, to correct an unsafe condition for Eurocopter (now Airbus Helicopters) Model AS332C, AS332C1, AS332L, AS332L1, AS332L2, and EC225LP helicopters. EASA advises that in-flight losses of hydraulic pressure were reported on these helicopters because of ''significant'' tears on the protection sheath of MGB hydraulic flexible ''pipes'' manufactured by TECALEMIT. This condition could lead to simultaneous left-hand and right-hand hydraulic system leakage, loss of the hydraulic system, and consequently, loss of helicopter control could occur, EASA advises.

FAA's Determination

These helicopters have been approved by the aviation authority of France and are approved for operation in the United States. Pursuant to our bilateral agreement with France, EASA, its technical representative, has notified us of the unsafe condition described in its AD. We are proposing this AD because we evaluated all known relevant information and determined that an unsafe condition is likely to exist or develop on other products of the same type design.

Related Service Information

Eurocopter issued Service Bulletin (SB) No. EC225–05–027, Revision 1, dated July 17, 2013, for Model EC225LP helicopters and SB No. AS332–05.00.92, Revision 1, dated July 17, 2013, for Model AS332C, AS332C1, AS332L, AS332L1, AS332L2 and military Model AS332B, AS332B1, AS332F1, AS332M and AS332M1 helicopters. The SBs state Eurocopter received a report concerning the loss of pressure in the left-hand hydraulic system in-flight. Hydraulic fluid was found in the cabin, though the flight was completed without further incident. An examination of the hydraulic system showed that the hose located between the forward servo-

control and the hydraulic manifold had burst. Further investigations have shown corrosion on the metal braid located under the fire-resistant sheath of hoses manufactured by TECALEMIT. The corrosion may be caused by the deterioration or gaping of the fire-resistant sheath at the hose ends, enabling humidity to enter between the sheath and the metal braid. Eurocopter recommends inspecting the hoses regardless of their manufacturer. As a result, the SBs require checking each hose for a notch, tear, crack, or friction mark, measuring any damage found, and replacing any hose that has damage.

Proposed AD Requirements

This proposed AD would require: Within 110 hours time-in-service (TIS) and every 110 hours TIS thereafter, visually inspecting each TECALEMIT hose installed in the MGB compartment. If there is a cut or crack in the hose sheath that allows you to see the metal braid underneath, replace the hose before further flight. If there is a cut, crack or other damage in the hose on the right hand hydraulic system that does not allow you to see the metal braid underneath, replace the hose with an airworthy hose within 300 hours TIS. If there is a cut, crack or other damage in the hose on the left hand hydraulic system that does not allow you to see the metal braid underneath, replace the hose with an airworthy hose within 600 hours TIS.

Differences Between the Proposed AD and the EASA AD

The EASA AD requires a one-time inspection, while the proposed AD would require that the inspection of the hoses be repeated every 110 hours TIS. The EASA AD requires that if severe damage is found in a hose on the right hand hydraulic system then the hose be replaced before the next flight, while the proposed AD would require this regardless of whether the hose is on the right hand or left hand hydraulic system. The EASA AD applies to Airbus Helicopters Model AS332C1 helicopter. The proposed AD would not because Model AS332C1 helicopters have no FAA type certificate. The EASA had sets some compliance times based on months. We set compliance times based only on hours TIS.

Costs of Compliance

We estimate that this proposed AD would affect 19 helicopters of U.S. Registry and that labor costs average $85 a work-hour. Based on these estimates, we expect the following costs:

Inspecting the hoses installed in a MGB compartment would require 1.5 work-hours for a labor cost of about $128 per helicopter, $2,432 for the U.S. fleet.

Replacing a hose would require 2.5 work-hours for a labor cost of about $213. Parts would cost $2,000 for a total cost of $2,213 per helicopter.

Authority for This Rulemaking

Title 49 of the United States Code specifies the FAA's authority to issue rules on aviation safety. Subtitle I, section 106, describes the authority of the FAA Administrator. ''Subtitle VII: Aviation Programs,'' describes in more detail the scope of the Agency's authority.

We are issuing this rulemaking under the authority described in ''Subtitle VII, Part A, Subpart III, Section 44701: General requirements.'' Under that section, Congress charges the FAA with promoting safe flight of civil aircraft in air commerce by prescribing regulations for practices, methods, and procedures the Administrator finds necessary for safety in air commerce. This proposed regulation is within the scope of that authority because it addresses an unsafe condition that is likely to exist or develop on products identified in this rulemaking action.

Regulatory Findings

We determined that this proposed AD would not have federalism implications under Executive Order 13132. This proposed AD would not have a substantial direct effect on the States, on the relationship between the national Government and the States, or on the distribution of power and responsibilities among the various levels of government.

For the reasons discussed, I certify this proposed regulation:

1. Is not a ''significant regulatory action'' under Executive Order 12866;

2. Is not a ''significant rule'' under the DOT Regulatory Policies and Procedures (44 FR 11034, February 26, 1979);

3. Will not affect intrastate aviation in Alaska to the extent that it justifies making a regulatory distinction; and

4. Will not have a significant economic impact, positive or negative, on a substantial number of small entities under the criteria of the Regulatory Flexibility Act.

We prepared an economic evaluation of the estimated costs to comply with this proposed AD and placed it in the AD docket.

List of Subjects in 14 CFR Part 39

Air transportation, Aircraft, Aviation safety, Incorporation by reference, Safety.

The Proposed Amendment

Accordingly, under the authority delegated to me by the Administrator, the FAA proposes to amend 14 CFR part 39 as follows:

PART 39—AIRWORTHINESS DIRECTIVES

■ 1. The authority citation for part 39 continues to read as follows:

Authority: 49 U.S.C. 106(g), 40113, 44701.

§ 39.13 [Amended]

■ 2. The FAA amends § 39.13 by adding the following new airworthiness directive (AD):

Airbus Helicopters (Previously Eurocopter France) (Airbus Helicopters): Docket No. FAA–2014–0333; Directorate Identifier 2013–SW–025–AD.

(a) Applicability

This AD applies to Airbus Helicopters Model EC225LP, AS332C, AS332L, AS332L1, and AS332L2 helicopters with a TECALEMIT main gear box (MGB) hydraulic flexible hose (hose) installed, certificated in any category.

(b) Unsafe Condition

This AD defines the unsafe condition as loss of hydraulic pressure because of the failure of a hose. This condition could result in loss of the hydraulic system and consequently, loss of helicopter control.

(c) Comments Due Date

We must receive comments by August 1, 2014.

(d) Compliance

You are responsible for performing each action required by this AD within the specified compliance time unless it has already been accomplished prior to that time.

(e) Required Actions

(1) Within 110 hours time-in-service (TIS), and thereafter at intervals not to exceed 110 hours TIS, visually inspect each TECALEMIT hose installed in the MGB compartment for a cut, crack, or other damage.

(2) If there is a cut, crack, or any other damage in the hose sheath that allows you to see the metal braid underneath when pinching or twisting the sheath, replace the hose before further flight.

(3) If there is a cut, crack, or any other damage in the hose sheath on the right hand hydraulic system that does not allow you to see the metal braid underneath, replace the hose within 300 hours TIS.

(4) If there is a cut, crack, or any other damage in the hose sheath on the left hand hydraulic system that does not allow you to see the metal braid underneath, replace the hose within 600 hours TIS.

(f) Alternative Methods of Compliance (AMOCs)

(1) The Manager, Safety Management Group, FAA, may approve AMOCs for this AD. Send your proposal to: Rao Edupuganti, Aviation Safety Engineer, Safety Management

Group, Rotorcraft Directorate, FAA, 2601 Meacham Blvd., Fort Worth, Texas 76137; telephone (817) 222–5110; email *rao.edupuganti@faa.gov*.

(2) For operations conducted under a 14 CFR part 119 operating certificate or under 14 CFR part 91, subpart K, we suggest that you notify your principal inspector, or lacking a principal inspector, the manager of the local flight standards district office or certificate holding district office before operating any aircraft complying with this AD through an AMOC.

(g) Additional Information

(1) Eurocopter Service Bulletin (SB) No. EC225–05–027 and SB No. AS332–05.00.92, both Revision 1 and dated July 17, 2013; Eurocopter SB No. AS332–29.00.17 and SB No. EC225–29–005, both Revision 0 and both dated June 21, 2013; and Eurocopter Information Notice No. 2506–I–29, Revision 2, dated July 24, 2013; which are not incorporated by reference, contain additional information about the subject of this AD. For service information identified in this AD, contact Airbus Helicopters, Inc., 2701 N. Forum Drive, Grand Prairie, TX 75052; telephone (972) 641–0000 or (800) 232–0323; fax (972) 641–3775; or at *http://www.airbushelicopters.com/techpub*. You may review the referenced service information at the FAA, Office of the Regional Counsel, Southwest Region, 2601 Meacham Blvd., Room 663, Fort Worth, Texas 76137.

(2) The subject of this AD is addressed in the European Aviation Safety Agency (EASA) AD No. 2013–0069, dated March 18, 2013. You may view the EASA AD on the Internet at *http://www.regulations.gov* in Docket No. FAA–2014–0333.

(h) Subject

Joint Aircraft Service Component (JASC) Code: 2910, Main Hydraulic System.

Issued in Fort Worth, Texas, on May 21, 2014.

Lance T. Gant,

Acting Directorate Manager, Rotorcraft Directorate, Aircraft Certification Service.

[FR Doc. 2014–12740 Filed 5–30–14; 8:45 am]

BILLING CODE 4910–13–P

DEPARTMENT OF TRANSPORTATION

Federal Aviation Administration

14 CFR Part 39

[Docket No. FAA–2014–0335; Directorate Identifier 2013–SW–021–AD]

RIN 2120–AA64

Airworthiness Directives; Sikorsky Aircraft Corporation (Sikorsky) Helicopters

AGENCY: Federal Aviation Administration (FAA), DOT.

ACTION: Notice of proposed rulemaking (NPRM).

SUMMARY: We propose to adopt a new airworthiness directive (AD) for Sikorsky Model S–76A, S–76B, and S–76C helicopters with a main gearbox (MGB) installed that has undergone certain repairs. This proposed AD would require inspecting the MGB lower housing jet bores for leaks, paint or caulk blistering, and liner protrusion. This proposed AD is prompted by several reports of MGB low oil pressure warnings which were determined to be the result of unsecured jet bore liners that had protruded. The proposed actions are intended to prevent failure of the MGB from loss of oil, which could result in subsequent loss of control of the helicopter.

DATES: We must receive comments on this proposed AD by August 1, 2014.

ADDRESSES: You may send comments by any of the following methods:

- *Federal eRulemaking Docket:* Go to *http://www.regulations.gov*. Follow the online instructions for sending your comments electronically.
- *Fax:* 202–493–2251.
- *Mail:* Send comments to the U.S. Department of Transportation, Docket Operations, M–30, West Building Ground Floor, Room W12–140, 1200 New Jersey Avenue SE., Washington, DC 20590–0001.
- *Hand Delivery:* Deliver to the ''Mail'' address between 9 a.m. and 5 p.m., Monday through Friday, except Federal holidays.

Examining the AD Docket

You may examine the AD docket on the Internet at *http://www.regulations.gov* or in person at the Docket Operations Office between 9 a.m. and 5 p.m., Monday through Friday, except Federal holidays. The AD docket contains this proposed AD, the economic evaluation, any comments received, and other information. The street address for the Docket Operations Office (telephone 800–647–5527) is in the **ADDRESSES** section. Comments will be available in the AD docket shortly after receipt.

For service information identified in this proposed AD, contact Sikorsky Aircraft Corporation, Customer Service Engineering, 124 Quarry Road, Trumbull, CT 06611; telephone 1–800–Winged–S or 203–416–4299; email *sikorskywcs@sikorsky.com*. You may review the referenced service information at the FAA, Office of the Regional Counsel, Southwest Region, 2601 Meacham Blvd., Room 663, Fort Worth, Texas 76137.

FOR FURTHER INFORMATION CONTACT: Jeffrey Lee, Aviation Safety Engineer, Boston Aircraft Certification Office, Engine & Propeller Directorate, 12 New England Executive Park, Burlington, Massachusetts 01803; telephone (781) 238–7161; email *jeffrey.lee@faa.gov*.

SUPPLEMENTARY INFORMATION:

Comments Invited

We invite you to participate in this rulemaking by submitting written comments, data, or views. We also invite comments relating to the economic, environmental, energy, or federalism impacts that might result from adopting the proposals in this document. The most helpful comments reference a specific portion of the proposal, explain the reason for any recommended change, and include supporting data. To ensure the docket does not contain duplicate comments, commenters should send only one copy of written comments, or if comments are filed electronically, commenters should submit only one time.

We will file in the docket all comments that we receive, as well as a report summarizing each substantive public contact with FAA personnel concerning this proposed rulemaking. Before acting on this proposal, we will consider all comments we receive on or before the closing date for comments. We will consider comments filed after the comment period has closed if it is possible to do so without incurring expense or delay. We may change this proposal in light of the comments we receive.

Discussion

We have received four reports of protruding jet bore liners on Sikorsky S–76 helicopters with a MGB, part number (P/N) 76351–09000 series, 76351–09500 series, and 76351–09600 series, that have been repaired in accordance with Sikorsky Overhaul and Repair Instruction (ORI) No. 76350–065, Revisions A through E. Two of the protruding liners were discovered following low MGB oil pressure warnings, and two were discovered on the same MGB during maintenance. Subsequent investigation revealed that during an overhaul of the MGB, the jet bore liner retaining pins were not adequately drilled into the liner, allowing the jet bore liner to move in the housing. The investigation determined that the ORI instructions did not adequately describe procedures and housing wall thickness limitations for installing the retaining pins. Movement of the jet bore liner into the housing allows oil to leak between the liner and the housing, possibly resulting in loss of oil in the MGB, which could result in failure of the MGB and subsequent loss of control of the

helicopter. Sikorksy ORI No. 76350–065, Revision F, dated May 10, 2012 (ORI 76350–065F), resolves this condition by clarifying the wall thickness limitations, specifying additional retaining pins for some jet bores, and providing additional information to perform the repair procedures.

FAA's Determination

We are proposing this AD because we evaluated all known relevant information and determined that an unsafe condition exists and is likely to exist or develop on other products of these same type designs.

Related Service Information

Sikorsky has issued Alert Service Bulletin (ASB) 76–66–50 Basic Issue, dated January 14, 2013 (ASB 76–66–50) for Model S–76A, S–76B, and S–76C helicopters with an MGB P/N 76351–09000 series, 76351–09500 series, and 76351–09600 series, which have been repaired in accordance with ORI number 76350–065. An MGB that has been repaired in accordance with ORI number 76350–065 may be marked TS–065–II, TS–065–IIA, TS–065–2, or TS–065–2A, depending on the ORI revision used. ASB 76–66–50 describes procedures for inspecting each MGB lower housing jet bore for leaking oil, paint or caulk blistering, and liner protrusion. If there is any liner protrusion or leaking oil between the liner and the housing, the ASB requires replacing the MGB. If there is paint or caulk blistering, the ASB requires further inspecting for leaking oil by replacing the jet bore packing, performing a ground run of the main rotor for 30 minutes, and re-inspecting the jet bore for leaking oil.

Sikorsky ORI 76350–065F describes procedures for repairing the retaining ring groove areas of the MGB jet bores. ORI 76350–065F also contains clarified housing wall thickness limits for installing jet bore liners and procedures for installing additional retaining pins in the jet bore liners.

Proposed AD Requirements

This proposed AD would require, within 50 hours time-in-service (TIS), compliance with the inspection requirements of the manufacturer's service bulletin. If there is oil leakage or protrusion of a jet bore liner, this proposed AD would require replacing the MGB before further flight.

Within 1,500 hours TIS, this proposed AD would require replacing the MGB with an MGB that is not subject to the applicability of this proposed AD unless it has been repaired in accordance with ORI 76350–065F.

Differences Between This Proposed AD and the Service Information

The ASB specifies compliance by a specific calendar date, while the compliance time in this proposed AD is in hours TIS. The ASB does not specify a terminating action for the recurring inspections of the MGB jet bores; the proposed AD would require installing an MGB not subject to the applicability of the proposed AD unless it has been repaired in accordance with ORI 76350–065F, which would be terminating action for the daily inspections. The service information also allows any affected MGB sent in for repair or overhaul to be repaired in accordance with ORI 76350–065 Revision B or later; the proposed AD would not allow installation of an affected MGB unless it has been repaired in accordance with ORI 76350–065F, as this revision incorporates the clarified instructions and additional retaining pin requirements that would provide terminating action for the daily inspections.

Costs of Compliance

We estimate that this proposed AD would affect 53 helicopters of U.S. Registry. We estimate that operators may incur the following costs in order to comply with this AD. At an average labor rate of $85 per hour, inspecting the jet bore liners would require about 1.1 work-hours, for a cost per helicopter of $94 and a total cost to US operators of $4,982 per inspection cycle. If required, repairing a jet bore liner would require about 14 work-hours, and required parts would cost $200, for a cost per helicopter of $1,390. If required, replacing the MGB would require about 134 work-hours, and required parts would cost $994,000, for a cost per helicopter of $1,005,390.

Authority for This Rulemaking

Title 49 of the United States Code specifies the FAA's authority to issue rules on aviation safety. Subtitle I, section 106, describes the authority of the FAA Administrator. ''Subtitle VII: Aviation Programs,'' describes in more detail the scope of the Agency's authority.

We are issuing this rulemaking under the authority described in ''Subtitle VII, Part A, Subpart III, Section 44701: General requirements.'' Under that section, Congress charges the FAA with promoting safe flight of civil aircraft in air commerce by prescribing regulations for practices, methods, and procedures the Administrator finds necessary for safety in air commerce. This proposed regulation is within the scope of that authority because it addresses an unsafe condition that is likely to exist or develop on products identified in this rulemaking action.

Regulatory Findings

We determined that this proposed AD would not have federalism implications under Executive Order 13132. This proposed AD would not have a substantial direct effect on the States, on the relationship between the national Government and the States, or on the distribution of power and responsibilities among the various levels of government.

For the reasons discussed, I certify this proposed regulation:

1. Is not a ''significant regulatory action'' under Executive Order 12866;
2. Is not a ''significant rule'' under the DOT Regulatory Policies and Procedures (44 FR 11034, February 26, 1979);
3. Will not affect intrastate aviation in Alaska to the extent that it justifies making a regulatory distinction; and
4. Will not have a significant economic impact, positive or negative, on a substantial number of small entities under the criteria of the Regulatory Flexibility Act.

We prepared an economic evaluation of the estimated costs to comply with this proposed AD and placed it in the AD docket.

List of Subjects in 14 CFR Part 39

Air transportation, Aircraft, Aviation safety, Incorporation by reference, Safety.

The Proposed Amendment

Accordingly, under the authority delegated to me by the Administrator, the FAA proposes to amend 14 CFR part 39 as follows:

PART 39—AIRWORTHINESS DIRECTIVES

■ 1. The authority citation for part 39 continues to read as follows:

Authority: 49 U.S.C. 106(g), 40113, 44701.

§ 39.13 [Amended]

■ 2. The FAA amends § 39.13 by adding the following new airworthiness directive (AD):

Sikorsky Aircraft Corporation (Sikorsky): Docket No. FAA–2014–0335; Directorate Identifier 2013–SW–021–AD.

(a) Applicability

This AD applies to Sikorsky Model S–76A, S–76B, and S–76C helicopters with a main gearbox (MGB) part number (P/N) 76351–09000 series, 76351–09500 series, and 76351–09600 series installed that has been

repaired in accordance with Sikorsky Overhaul and Repair Instruction (ORI) No. 76350–065, Revision A through Revision E, certificated in any category.

(b) Unsafe Condition

This AD defines the unsafe condition as an unsecured MGB lower housing jet bore liner. This condition may cause the liner to move out of place, allowing oil to leak from the MGB, resulting in MGB failure and subsequent loss of control of the helicopter.

(c) Comments Due Date

We must receive comments by August 1, 2014.

(d) Compliance

You are responsible for performing each action required by this AD within the specified compliance time unless it has already been accomplished prior to that time.

(e) Required Action

(1) Within 50 hours time-in-service (TIS), and thereafter at intervals not to exceed 6 hours TIS, inspect each MGB lower housing jet bore (jet bore), as depicted in Figures 3 and 4 of Sikorsky S–76 Alert Service Bulletin 76–66–50, Basic Issue, dated January 14, 2013 (ASB 76–66–50), for liner protrusion or movement, paint or caulk blistering, or oil leakage.

(i) If there is any liner protrusion or movement, before further flight, replace the MGB with an MGB that has not been repaired in accordance with Sikorsky ORI No. 76350–065, Revision A through Revision E, unless it has been subsequently repaired in accordance with Sikorsky ORI No. 76350–065, Revision F, dated May 10, 2012.

(ii) If there is any oil leakage or paint or caulk blistering, inspect the jet bore for liner protrusion and perform a leakage check by following the Accomplishment Instructions, Paragraphs 3.C.(1) through 3.C.(6)(a), of ASB 76–66–50.

(iii) If any moisture or droplets of MGB oil are visible on a jet bore after accomplishing the leakage check specified in paragraph 3.C.(6)(a) of ASB 76–66–50, repeat paragraphs 3.C(4) through 3.C(6) of ASB 76–66–50. If any moisture or droplets of MGB oil are still visible, before further flight, replace the MGB with an MGB that has not been repaired in accordance with Sikorsky ORI No. 76350–065, Revision A through Revision E, unless it has been subsequently repaired in accordance with Sikorsky ORI No. 76350–065, Revision F.

(2) Within 1500 hours TIS, replace the MGB with an MGB that has not been repaired in accordance with Sikorsky ORI No. 76350–065, Revision A through Revision E, unless it has been subsequently repaired in accordance with Sikorsky ORI No. 76350–065, Revision F. This is terminating action for the repetitive inspections required by this AD.

(f) Alternative Methods of Compliance (AMOC)

(1) The Manager, Boston Aircraft Certification Office, FAA, may approve AMOCs for this AD. Send your proposal to: Jeffrey Lee, Aviation Safety Engineer, Boston Aircraft Certification Office, Engine & Propeller Directorate, 12 New England Executive Park, Burlington, Massachusetts 01803; telephone (781) 238–7161; email *jeffrey.lee@faa.gov.*

(2) For operations conducted under a 14 CFR part 119 operating certificate or under 14 CFR part 91, subpart K, we suggest that you notify your principal inspector, or lacking a principal inspector, the manager of the local flight standards district office or certificate holding district office before operating any aircraft complying with this AD through an AMOC.

(h) Additional Information

Sikorsky Overhaul and Repair Instruction No. 76350–065, Revision F, dated May 10, 2012, which is not incorporated by reference, contains additional information about the subject of this AD. You may review copies of information at the FAA, Office of the Regional Counsel, Southwest Region, 2601 Meacham Blvd., Room 663, Fort Worth, Texas 76137. For information on the availability of this material at the FAA, call (817) 222–5110.

(i) Subject

Joint Aircraft Service Component (JASC) Code: 6320: Main Rotor Gearbox.

Issued in Fort Worth, Texas, on May 21, 2014.

Lance T. Gant,

Acting Directorate Manager, Rotorcraft Directorate, Aircraft Certification Service.

[FR Doc. 2014–12738 Filed 5–30–14; 8:45 am]

BILLING CODE 4910–13–P

DEPARTMENT OF TRANSPORTATION

Federal Aviation Administration

14 CFR Part 39

[Docket No. FAA–2014–0337; Directorate Identifier 2013–SW–029–AD]

RIN 2120–AA64

Airworthiness Directives; Various Restricted Category Helicopters

AGENCY: Federal Aviation Administration (FAA), DOT.

ACTION: Notice of proposed rulemaking (NPRM).

SUMMARY: We propose to supersede airworthiness directive (AD) 2012–14–11 for Arrow Falcon Exporters, Inc. (AFE), Rotorcraft Development Corporation (RDC), and San Joaquin Helicopters (SJH) Model OH–58A, OH–58A+, and OH–58C helicopters. AD 2012–14–11 currently requires inspecting the main rotor mast (mast) for a crack. Since we issued AD 2012–14–11, we have determined that the area of the mast requiring inspection should be expanded and repetitive inspections of the mast should be accomplished. This proposed AD would expand the area of the mast that requires an inspection for a crack and would require repetitive inspections of the mast. The proposed actions are intended to prevent failure of the mast and subsequent loss of control of the helicopter.

DATES: We must receive comments on this proposed AD by August 1, 2014.

ADDRESSES: You may send comments by any of the following methods:

- *Federal eRulemaking Docket:* Go to *http://www.regulations.gov.* Follow the online instructions for sending your comments electronically.
- *Fax:* 202–493–2251.
- *Mail:* Send comments to the U.S. Department of Transportation, Docket Operations, M–30, West Building Ground Floor, Room W12–140, 1200 New Jersey Avenue SE., Washington, DC 20590–0001.
- *Hand Delivery:* Deliver to the ''Mail'' address between 9 a.m. and 5 p.m., Monday through Friday, except Federal holidays.

Examining the AD Docket

You may examine the AD docket on the Internet at *http://www.regulations.gov* or in person at the Docket Operations Office between 9 a.m. and 5 p.m., Monday through Friday, except Federal holidays. The AD docket contains this proposed AD, the economic evaluation, any comments received and other information. The street address for the Docket Operations Office (telephone 800–647–5527) is in the **ADDRESSES** section. Comments will be available in the AD docket shortly after receipt.

FOR FURTHER INFORMATION CONTACT: John Cecil, Aviation Safety Engineer, Los Angeles Aircraft Certification Office, Transport Airplane Directorate, FAA, 3960 Paramount Blvd., Lakewood, CA 90712; telephone (562) 627–5228; email *john.cecil@faa.gov;* or Roger Caldwell, Aerospace Engineer, Denver Aircraft Certification Office, FAA, 26805 East 68th Ave., Room 214, Denver, CO 80249; telephone (303) 342–1086; email *roger.caldwell@faa.gov.*

SUPPLEMENTARY INFORMATION:

Comments Invited

We invite you to participate in this rulemaking by submitting written comments, data, or views. We also invite comments relating to the economic, environmental, energy, or federalism impacts that might result from adopting the proposals in this document. The most helpful comments reference a specific portion of the proposal, explain the reason for any recommended change, and include

supporting data. To ensure the docket does not contain duplicate comments, commenters should send only one copy of written comments, or if comments are filed electronically, commenters should submit only one time.

We will file in the docket all comments that we receive, as well as a report summarizing each substantive public contact with FAA personnel concerning this proposed rulemaking. Before acting on this proposal, we will consider all comments we receive on or before the closing date for comments. We will consider comments filed after the comment period has closed if it is possible to do so without incurring expense or delay. We may change this proposal in light of the comments we receive.

Discussion

On July 5, 2012, we issued AD 2012–14–11, amendment 39–17125 (77 FR 42971, July 23, 2012) for AFE, RDC, and SJH Model OH–58A, OH–58A+, and OH–58C helicopters. AD 2012–14–11 requires overhauling the mast and performing magnetic particle, fluorescent penetrant, and visual inspections for a crack, pitting, or corrosion in the threaded area of the mast and associated parts. If there is a crack, pitting, or corrosion, AD 2012–14–11 requires replacing the mast with an airworthy mast and reporting any crack, pitting, or corrosion found during the inspections. AD 2012–14–11 was prompted by two mast failures, one on an OH–58A+ and one on an OH–58C helicopter, both used in agricultural spraying operations. Investigation revealed that the mast failures were caused by fatigue cracking, which initiated from corrosion pitting found in or adjacent to the threaded section of the mast approximately 45 inches from the top of the mast. The actions of AD 2012–14–11 were intended to prevent failure of the mast and subsequent loss of control of the helicopter.

Comments

After we issued AD 2012–14–11, amendment 39–17125 (77 FR 42971, July 23, 2012), we received comments from two commenters.

Request

RDC requested that we change the applicability of AD 2012–14–11, amendment 39–17125 (77 FR 42971, July 23, 2012), to include Bell Model 206A and 206B helicopters, stating that these models have an identical configuration and could be susceptible to the same corrosion and fatigue cracking as the OH–58. We do not agree. A number of hardware components on the Bell Model 206A and 206B helicopter masts including the seals, packing, and shims are not identical to components used on the OH–58. These differences are sufficient to exclude the Bell Model 206A and 206B helicopters from the applicability of this AD.

RDC also requested that the use of Grade 1 corrosion preventative compound (CPC) be allowed as it provides better protection and more adequate sealing of the mast and locking plate, and it is used on similar structures on the Bell Model 206A and 206B helicopters. We agree with this comment. The proposed AD does not specify the use of any particular CPC, and therefore operators may comply using any compound and method as long as all work is done as prescribed in the manufacturer's maintenance manual or Instructions for Continued Airworthiness, or using other methods acceptable to the FAA.

RDC further recommended installing the lock bead over a seal of 8802 Type B (ProSeal) sealant and applying a bead on top of the joint to enhance seal properties and prevent corrosion. We agree with this comment. The proposed AD does not specify the use of any particular sealant or prohibit application of an extra bead of sealant. Operators may comply as long as all work is done as prescribed in the manufacturer's maintenance manual or Instructions for Continued Airworthiness, or using other methods acceptable to the FAA.

RDC also emphasized that keeping the mast support drain holes unobstructed and prohibiting pressure washing in the area around the support would minimize the amount of water intrusion inside the support around the mast seal area. We partially agree with this comment. While it is important to emphasize that the mast drain holes remain unobstructed and that pressure washing of the mast support area should be minimized, we do not agree that these concerns should be mandated by the proposed AD.

RDC further requested that the overhaul interval of the masts should be reduced from 2,400 hours time-in service (TIS) to 1,200 hours TIS. We agree. The proposed AD includes a requirement to overhaul and inspect the mast at intervals not exceeding 1,200 hours TIS or 3 years, whichever occurs earlier.

The National Transportation Safety Board (NTSB) commented in support of the required inspection of the threaded area of the mast for a crack, pitting, or corrosion, but requested that the area adjacent to the threaded area (identified in AD 2012–14–11 as ''area J'') be added to the visual inspection requirements of the proposed AD. The NTSB states that a prior accident investigation revealed the mast had fractured in this section. We agree with this comment. Although AD 2012–14–11 does contain a requirement for magnetic particle inspecting the entire mast for a crack, we have included the expanded area in the visual inspection requirements in the proposed AD.

Actions Since AD 2012–14–11 Was Issued

Since we issued AD 2012–14–11, amendment 39–17125 (77 FR 42971, July 23, 2012) we have determined that visually inspecting the area of the mast adjacent to the threaded portion should be included in the overhaul and that the inspection should be repetitive. We have also determined that reporting the findings of any inspection required by AD 2012–14–11 is unnecessary, and have removed this requirement from the proposed AD. Lastly, we have revised the order of the inspections so that removing any surface corrosion and performing the visual inspection are completed prior to the magnetic particle inspection.

FAA's Determination

We are proposing this AD because we evaluated all the relevant information and determined the unsafe condition described previously is likely to exist or develop in other products of these same type designs.

Related Service Information

AFE issued Alert Service Bulletin (ASB): 2012–58–01, Revision 1, dated February 20, 2012 (ASB 2012–58–01), which specifies overhauling and inspecting the mast for any cracks, pitting, or corrosion by following the procedures in the United States Army Aviation Unit and Intermediate Maintenance Manual TM55–1520–228–23. ASB 2012–58–01 further specifies replacing any mast with a crack, pitting, or corrosion beyond surface rust that is removed with a wire brush or steel wool in the threaded portion of the mast.

RDC has issued ASB No. OH–58–13–01, dated January 30, 2013 (OH–58–13–01), which describes additional procedures for inspecting the mast and establishes an overhaul interval of 1,200 hours TIS or 3 years, whichever occurs first.

Proposed AD Requirements

This proposed AD would retain the mast inspection and overhaul requirements of AD 2012–14–11, amendment 39–17125 (77 FR 42971, July 23, 2012), and would:

• Change the compliance time for the inspection from within 30 days to within 90 days (unless accomplished previously within the last 12 months);

• Require repeating the inspection every 1,200 hours TIS or 3 years, whichever occurs earlier;

• Require inspecting, with a 10X or higher magnifying glass, the area adjacent to the threaded area of the mast for a crack or corrosion pitting; and

• Remove the reporting requirement of AD 2012–14–11.

Differences Between This AD and the Service Information

The service information does not apply to SJH helicopters. Those helicopters are included in this AD because they have the same mast design and are operated similarly to the AFE and RDC fleets.

Costs of Compliance

We estimate that this proposed AD would affect 80 helicopters of U.S. Registry, and that operators may incur the following costs in order to comply with this AD. At an average labor rate of $85 per hour, inspecting the mast would require about 20 work hours, for a total cost of $1,700 per helicopter, and a total cost to the U.S. operator fleet of $136,000. Replacing a cracked main rotor mast would require about 20 work hours, and required parts would cost about $11,891 for a total cost per helicopter of $13,591.

Authority for This Rulemaking

Title 49 of the United States Code specifies the FAA's authority to issue rules on aviation safety. Subtitle I, section 106, describes the authority of the FAA Administrator. ''Subtitle VII: Aviation Programs,'' describes in more detail the scope of the Agency's authority.

We are issuing this rulemaking under the authority described in ''Subtitle VII, Part A, Subpart III, Section 44701: General requirements.'' Under that section, Congress charges the FAA with promoting safe flight of civil aircraft in air commerce by prescribing regulations for practices, methods, and procedures the Administrator finds necessary for safety in air commerce. This proposed regulation is within the scope of that authority because it addresses an unsafe condition that is likely to exist or develop on products identified in this rulemaking action.

Regulatory Findings

We determined that this proposed AD would not have federalism implications under Executive Order 13132. This proposed AD would not have a substantial direct effect on the States, on the relationship between the national Government and the States, or on the distribution of power and responsibilities among the various levels of government.

For the reasons discussed, I certify this proposed regulation:

1. Is not a ''significant regulatory action'' under Executive Order 12866;

2. Is not a ''significant rule'' under the DOT Regulatory Policies and Procedures (44 FR 11034, February 26, 1979);

3. Will not affect intrastate aviation in Alaska to the extent that it justifies making a regulatory distinction; and

4. Will not have a significant economic impact, positive or negative, on a substantial number of small entities under the criteria of the Regulatory Flexibility Act.

We prepared an economic evaluation of the estimated costs to comply with this proposed AD and placed it in the AD docket.

List of Subjects in 14 CFR Part 39

Air transportation, Aircraft, Aviation safety, Incorporation by reference, Safety.

The Proposed Amendment

Accordingly, under the authority delegated to me by the Administrator, the FAA proposes to amend 14 CFR part 39 as follows:

PART 39—AIRWORTHINESS DIRECTIVES

■ 1. The authority citation for part 39 continues to read as follows:

Authority: 49 U.S.C. 106(g), 40113, 44701.

§ 39.13 [Amended]

■ 2. The FAA amends § 39.13 by removing airworthiness directive (AD) 2012–14–11, Amendment 39–17125 (77 FR 42971, July 23, 2012), and adding the following new AD:

Various Restricted Category Helicopters: Docket No. FAA–2014–0337; Directorate Identifier 2013–SW–029–AD.

(a) Applicability

This AD applies to Arrow Falcon Exporters, Inc. (AFE), Rotorcraft Development Corporation (RDC) (formerly Garlick Helicopter Corporation, and Garlick Helicopter, Inc.), and San Joaquin Helicopters (SJH) Model OH–58A, OH–58A+, and OH–58C helicopters, certificated in any category.

(b) Unsafe Condition

This AD defines the unsafe condition as a crack in the main rotor mast, which could result in failure of the mast and subsequent loss of control of the helicopter.

(c) Affected AD

This AD supersedes AD 2012–14–11, Amendment 39–17125 (77 FR 42971, July 23, 2012).

(d) Comments Due Date

We must receive comments by August 1, 2014.

(e) Compliance

You are responsible for performing each action required by this AD within the specified compliance time unless it has already been accomplished prior to that time.

(f) Required Actions

(1) Within 90 days, unless accomplished previously within the last 12 months, and thereafter at intervals not exceeding 1,200 hours TIS or 3 years, whichever occurs earlier:

(i) Remove any surface rust with a wire brush or steel wool and, using a 10X or higher power magnifying glass, inspect the areas of the mast as shown in area E and area J of Figure 1 to Paragraph (f) of this AD for pitting, corrosion, or a crack.

(ii) Overhaul the main rotor mast assembly and magnetic particle inspect the mast; mast bearing nut; plate, mast and seal; and bearing liner for a crack.

(iii) Fluorescent penetrant inspect the locking plate for a crack.

Figure 1 to Paragraph (f)

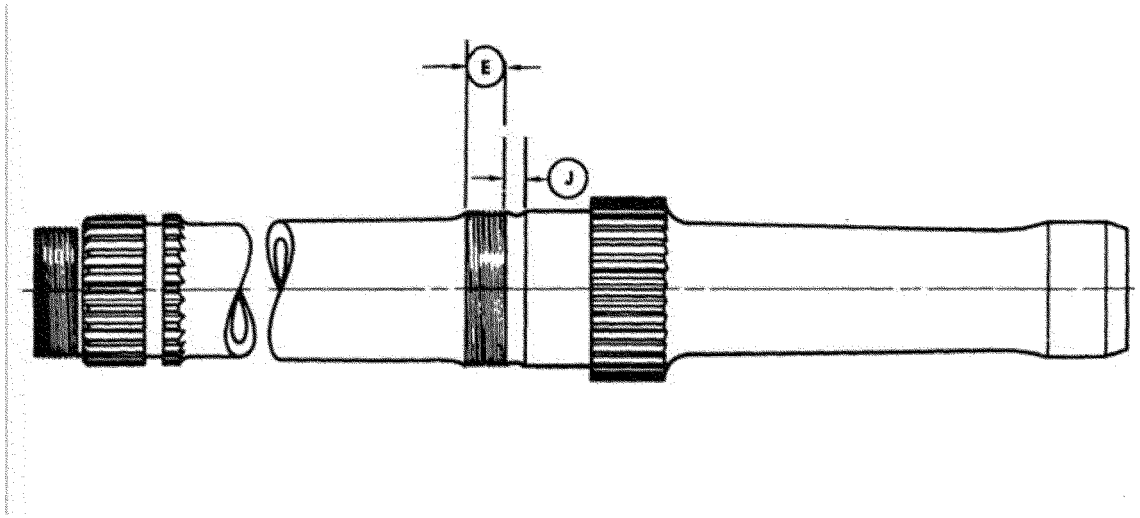

(2) If there is a crack, pitting, or corrosion, before further flight, replace the mast with an airworthy mast.

(g) Alternative Methods of Compliance (AMOCs)

(1) For AFE and SJH helicopters, the Manager, Los Angeles Aircraft Certification Office, FAA, may approve AMOCs for this AD. Send your proposal to: John Cecil, Aviation Safety Engineer, Los Angeles Aircraft Certification Office, Transport Airplane Directorate, FAA, 3960 Paramount Blvd., Lakewood, CA 90712; telephone (562) 627–5228; email *john.cecil@faa.gov.*

(2) For RDC helicopters, the Manager, Denver Aircraft Certification Office, FAA, may approve AMOCs for this AD. Send your proposal to: Roger Caldwell, Aerospace Engineer, Denver Aircraft Certification Office, FAA, 26805 East 68th Ave., Room 214, Denver, CO 80249; telephone (303) 342–1086; email *roger.caldwell@faa.gov.*

(3) For operations conducted under a 14 CFR part 119 operating certificate or under 14 CFR part 91, subpart K, we suggest that you notify your principal inspector, or lacking a principal inspector, the manager of the local flight standards district office or certificate holding district office before operating any aircraft complying with this AD through an AMOC.

(h) Additional Information

(1) Arrow Falcon Exporters, Inc., Alert Service Bulletin: 2012–58–01, Revision 1, dated February 20, 2012, which is not incorporated by reference, contains more information about the subject of this AD. For Arrow Falcon Exporters, Inc. service information identified in this AD, contact Arrow Falcon Exporters, Inc., 2081 South Wildcat Way, Porterville, CA 93257; telephone (559) 781–8604; fax (559) 781–9271; email *afe@arrowfalcon.com.*

(2) Rotorcraft Development Corporation Alert Service Bulletin No. OH58–13–01, dated January 30, 2013, which is not incorporated by reference, contains more information about the subject of this AD. For Rotorcraft Development Corporation service information, contact Rotorcraft Development Corporation, PO Box 430, 1004 Eastside Highway, Corvallis, MT 59828; telephone (406) 961–4100; fax (406) 961–4101; or at *http://www.rotorcraftdevelopment.com.*

(3) United States Army Technical Manual Aviation Unit and Intermediate Maintenance Manual Army Model OH–58A and OH–58C Helicopters, TM 55–1520–228–23–1, which is not incorporated by reference, contains more information about the subject of this AD. For United States Army service information, contact Commander, U.S. Army Aviation and Missile Command, ATTN: AMSAM–MMA–NP, Redstone Arsenal, AL 35898–5000, telephone (256) 876–4044; or at *https://www.logsa.army.mil/etmpdf/files/030000/035016.pdf.*

(4) You may review the service information at the FAA, Office of the Regional Counsel, Southwest Region, 2601 Meacham Blvd., Room 663, Fort Worth, Texas 76137.

(i) Subject

Joint Aircraft Service Component (JASC) Code: 6300: Main Rotor Drive.

Issued in Fort Worth, Texas, on May 21, 2014.

Lance T. Gant,

Acting Directorate Manager, Rotorcraft Directorate, Aircraft Certification Service.

[FR Doc. 2014–12737 Filed 5–30–14; 8:45 am]

BILLING CODE 4910–13–P

DEPARTMENT OF TRANSPORTATION

Federal Aviation Administration

14 CFR Part 71

[Docket No. FAA–2013–0441; Airspace Docket No. 13–ASO–11]

Proposed Establishment of Class E Airspace; Pine Knot, KY

AGENCY: Federal Aviation Administration (FAA), DOT.

ACTION: Notice of proposed rulemaking (NPRM).

SUMMARY: This action proposes to establish Class E airspace at Pine Knot, KY, to accommodate a new Area Navigation (RNAV) Global Positioning System (GPS) Standard Instrument Approach Procedure (SIAP) serving McCreary County Airport. This action would enhance the safety and airspace management of Instrument Flight Rules (IFR) operations within the National Airspace System.

DATES: Comments must be received on or before July 17, 2014.

ADDRESSES: Send comments on this rule to: U.S. Department of Transportation, Docket Operations, West Building Ground Floor, Room W12–140, 1200 New Jersey, SE., Washington, DC 20590–0001; Telephone: 1–800–647–5527; Fax: 202–493–2251. You must identify the Docket Number FAA–2013–0441; Airspace Docket No. 13–ASO–11, at the beginning of your comments. You may also submit and review received comments through the Internet at *http://www.regulations.gov.*

FOR FURTHER INFORMATION CONTACT: John Fornito, Operations Support Group, Eastern Service Center, Federal Aviation Administration, P.O. Box 20636, Atlanta, Georgia 30320; telephone (404) 305–6364.

SUPPLEMENTARY INFORMATION:

Comments Invited

Interested persons are invited to comment on this rulemaking by submitting such written data, views, or arguments, as they may desire. Comments that provide the factual basis supporting the views and suggestions presented are particularly helpful in developing reasoned regulatory decisions on the proposal. Comments are specifically invited on the overall regulatory, aeronautical, economic, environmental, and energy-related aspects of the proposal.

Communications should identify both docket numbers (FAA Docket No. FAA–2013–0441; Airspace Docket No. 13–ASO–11) and be submitted in triplicate to the Docket Management System (see **ADDRESSES** section for address and phone number). You may also submit comments through the Internet at *http://www.regulations.gov.*

Persons wishing the FAA to acknowledge receipt of their comments on this action must submit with those comments a self-addressed stamped postcard on which the following statement is made: ''Comments to Docket No. FAA–2013–0441; Airspace Docket No. 13–ASO–11.'' The postcard will be date/time stamped and returned to the commenter.

All communications received before the specified closing date for comments will be considered before taking action on the proposed rule. The proposal contained in this notice may be changed in light of the comments received. A report summarizing each substantive public contact with FAA personnel concerned with this rulemaking will be filed in the docket.

Availability of NPRMs

An electronic copy of this document may be downloaded from and comments submitted through *http://www.regulations.gov.* Recently published rulemaking documents can also be accessed through the FAA's Web page at *http://www.faa.gov/airports_airtraffic/air_traffic/publications/airspace_amendments/.*

You may review the public docket containing the proposal, any comments received and any final disposition in person in the Dockets Office (see the **ADDRESSES** section for address and phone number) between 9:00 a.m. and 5:00 p.m., Monday through Friday, except Federal Holidays. An informal docket may also be examined between 8:00 a.m. and 4:30 p.m., Monday through Friday, except Federal Holidays, at the office of the Eastern Service Center, Federal Aviation Administration, Room 350, 1701 Columbia Avenue, College Park, Georgia 30337.

Persons interested in being placed on a mailing list for future NPRM's should contact the FAA's Office of Rulemaking, (202) 267–9677, to request a copy of Advisory circular No. 11–2A, Notice of Proposed Rulemaking distribution System, which describes the application procedure.

The Proposal

The FAA is considering an amendment to Title 14, Code of Federal Regulations (14 CFR) part 71 to establish Class E airspace at Pine Knot, KY, providing the controlled airspace required to support the new RNAV (GPS) standard instrument approach procedures for McCreary County Airport. Controlled airspace extending upward from 700 feet above the surface is required for IFR operations within a 9.3-mile radius of the airport.

Class E airspace designations are published in Paragraph 6005 of FAA order 7400.9X, dated August 7, 2013, and effective September 15, 2013, which is incorporated by reference in 14 CFR 71.1. The Class E airspace designation listed in this document will be published subsequently in the Order.

The FAA has determined that this proposed regulation only involves an established body of technical regulations for which frequent and routine amendments are necessary to keep them operationally current. It, therefore, (1) is not a ''significant regulatory action'' under Executive Order 12866; (2) is not a ''significant rule'' under DOT Regulatory Policies and Procedures (44 FR 11034; February 26, 1979); and (3) does not warrant preparation of a Regulatory Evaluation as the anticipated impact is so minimal. Since this is a routine matter that will only affect air traffic procedures and air navigation, it is certified that this proposed rule, when promulgated, would not have a significant economic impact on a substantial number of small entities under the criteria of the Regulatory Flexibility Act.

The FAA's authority to issue rules regarding aviation safety is found in Title 49 of the United States Code. Subtitle I, Section 106 describes the authority of the FAA Administrator. Subtitle VII, Aviation Programs, describes in more detail the scope of the agency's authority. This proposed rulemaking is promulgated under the authority described in Subtitle VII, Part, A, Subpart I, Section 40103. Under that section, the FAA is charged with prescribing regulations to assign the use of airspace necessary to ensure the safety of aircraft and the efficient use of airspace. This proposed regulation is within the scope of that authority as it would establish Class E airspace at McCreary County Airport, Pine Knot, KY.

This proposal will be subject to an environmental analysis in accordance with FAA Order 1050.1E, ''Environmental Impacts: Policies and Procedures'' prior to any FAA final regulatory action.

Lists of Subjects in 14 CFR Part 71:

Airspace, Incorporation by reference, Navigation (air).

The Proposed Amendment:

In consideration of the foregoing, the Federal Aviation Administration proposes to amend 14 CFR part 71 as follows:

PART 71—DESIGNATION OF CLASS A, B, C, D, AND E AIRSPACE AREAS; AIR TRAFFIC SERVICE ROUTES; AND REPORTING POINTS

■ 1. The authority citation for part 71 continues to read as follows:

Authority: 49 U.S.C. 106(g); 40103, 40113, 40120; E.O. 10854, 24 FR 9565, 3 CFR, 1959–1963 Comp., p. 389.

§ 71.1 [Amended]

■ 2. The incorporation by reference in 14 CFR 71.1 of Federal Aviation Administration Order 7400.9X, Airspace Designations and Reporting Points, dated August 7, 2013, effective September 15, 2013, is amended as follows:

Paragraph 6005 Class E Airspace Areas Extending Upward From 700 Feet or More Above the Surface of the Earth.

* * * * *

ASO KY E5 Pine Knot, KY [New]

McCreary County Airport, KY

(Lat. 36°41′43″ N., long. 84°23′29″ W.)

That airspace extending upward from 700 feet above the surface within a 9.3-mile radius of McCreary County Airport.

Issued in College Park, Georgia, on May 21, 2014.

Myron A. Jenkins,

Manager, Operations Support Group, Eastern Service Center, Air Traffic Organization.

[FR Doc. 2014–12689 Filed 5–30–14; 8:45 am]

BILLING CODE 4910–13–P

COMMODITY FUTURES TRADING COMMISSION

17 CFR Part 1

RIN 3038–AE19

Exclusion of Utility Operations-Related Swaps With Utility Special Entities From De Minimis Threshold for Swaps With Special Entities

AGENCY: Commodity Futures Trading Commission.

ACTION: Proposed rule.

SUMMARY: The Commodity Futures Trading Commission (Commission or CFTC) is proposing to amend its regulations (Proposal) to permit a person to exclude utility operations-related swaps with utility special entities in calculating the aggregate gross notional amount of the person's swap positions solely for purposes of the *de minimis* exception applicable to swaps with special entities.

DATES: Comments must be received on or before July 2, 2014.

ADDRESSES: You may submit comments, identified by RIN number 3038–AE19, by any of the following methods:

- *Agency Web site: http://comments.cftc.gov*;
- *Mail:* Secretary of the Commission, Commodity Futures Trading Commission, Three Lafayette Centre, 1155 21st Street NW., Washington, DC 20581;
- *Hand delivery/courier:* Same as Mail, above.
- *Federal eRulemaking Portal: http://www.regulations.gov*. Follow instructions for submitting comments.

All comments must be submitted in English, or if not, accompanied by an English translation. Comments will be posted as received to *www.cftc.gov*. You should submit only information that you wish to make available publicly. If you wish the Commission to consider information that is exempt from disclosure under the Freedom of Information Act, a petition for confidential treatment of the exempt information may be submitted according to the procedure established in CFTC Regulation 145.9.[1]

The Commission reserves the right, but shall have no obligation, to review, pre-screen, filter, redact, refuse or remove any or all of your submission from *www.cftc.gov* that it may deem to be inappropriate for publication, such as obscene language. All submissions that have been redacted or removed that contain comments on the merits of the rulemaking will be retained in the public comment file and will be considered as required under the Administrative Procedure Act and other applicable laws, and may be accessible under the Freedom of Information Act.

FOR FURTHER INFORMATION CONTACT: Gary Barnett, Director, (202) 418–6700, *gbarnett@cftc.gov*; Erik Remmler, Deputy Director, (202) 418–7630, *eremmler@cftc.gov*; Christopher W. Cummings, Special Counsel, (202) 418–5445, *ccummings@cftc.gov*; or Israel Goodman, Special Counsel, (202) 418–6715, *igoodman@cftc.gov*, Division of Swap Dealer and Intermediary Oversight, Commodity Futures Trading Commission, 1155 21st Street NW., Washington, DC 20581.

SUPPLEMENTARY INFORMATION:

I. Background

A. De Minimis Exception From Swap Dealer Definition

Section 1a(49)[2] of the Commodity Exchange Act (CEA or Act) defines the term ''swap dealer.'' CEA Section 1a(49)(D) requires the Commission to exempt from swap dealer designation an entity that engages in a *de minimis* quantity of swap dealing, and to promulgate regulations to establish factors for making a determination to so exempt such entities. Pursuant to this mandate, on April 27, 2012, the Commission adopted Regulation 1.3(ggg), which further defines the term ''swap dealer.''[3] Regulation 1.3(ggg) became effective on July 23, 2012, and registration as a swap dealer was required beginning October 12, 2012.[4]

Regulation 1.3(ggg)(4) includes an exception from the swap dealer definition for a person that has entered into swap positions connected with its swap dealing activities that, in the aggregate, do not exceed, during the preceding twelve-month period, either of two aggregate gross notional amount thresholds. The two aggregate gross notional amount thresholds are: (i) $3 billion, subject to a phase in level of $8 billion[5] (General *De Minimis* Threshold), and (ii) $25 million with regard to swaps in which the counterparty is a ''special entity'' (Special Entity *De Minimis* Threshold). CEA Section 4s(h)(2)(C) and Regulation 23.401(c) define the term ''special entity'' to include: A Federal agency; a State, State agency, city, county, municipality, or other political subdivision of a State; any employee benefit plan as defined under the Employee Retirement Income Security Act of 1974 (ERISA); any government plan as defined under ERISA; and any endowment. Regulation 23.401(c) adds ''any instrumentality, department, or a corporation of or established by a State or subdivision of a State'' to the definition.

B. Petition for Rulemaking

On July 12, 2012, the Commission received a petition for rulemaking that sought an amendment of Regulation 1.3(ggg)(4) (Petition).[6] The Petition requested that the regulation be amended to exclude from consideration, in determining whether a person has exceeded the Special Entity *De Minimis* Threshold, swaps to which the Petitioners and certain other special entities (collectively defined in the Petition as ''utility special entities''[7]) are counterparties and that relate to the Petitioners' and other utility special entities' utility operations (defined in the Petition as ''utility operations-related swaps'').[8]

[1] The Commission's regulations are found at 17 CFR Ch. I (2013) and can be accessed through the Commission's Web site.

[2] 7 U.S.C. 1a(49) (2012). The CEA can be accessed through the Commission's Web site.

[3] *See* 77 FR 30596 (May 23, 2012) (Swap Dealer Definition Adopting Release).

[4] The further definition of the term ''swap'' is found in Regulation 1.3(xxx), which became effective October 12, 2012. *See* 77 FR 48208 (Aug. 13, 2012). *See also* Regulation 3.10(a)(1)(v)(C), which establishes that each person who comes within the swap dealer definition from and after the effective date of that definition is subject to registration as a swap dealer with the Commission.

[5] The Commission set the General *De Minimis* Threshold at an initial phase-in level of $8 billion as of July 23, 2012, the effective date of the Swap Dealer Definition Adopting Release. Upon termination of the phase-in period this amount will decrease to $3 billion (or such alternative amount as the Commission may adopt by rulemaking) in accordance with the phase-in procedure outlined in Regulation 1.3(ggg)(4)(ii).

[6] Petition for Rulemaking to Amend CFTC Regulation 1.3(ggg)(4), dated July 12, 2012. The Petition was filed by the American Public Power Association, the Large Public Power Council, the American Public Gas Association, the Transmission Access Policy Study Group and the Bonneville Power Administration (Petitioners). The Petition and the comment letters that were submitted in support of it are available at *http://sirt.cftc.gov/sirt/sirt.aspx?Topic=PendingFilingsandActionsAD&Key=23845*.

[7] The Petition defined the term ''utility special entity'' to mean a government special entity that—

owns or operates electric or natural gas facilities or electric or natural gas operations (or anticipated facilities or operations), supplies natural gas and/or electric energy to other utility special entities, has public service obligations (or anticipated public service obligations) under Federal, State or local law or regulation to deliver electric energy and/or natural gas service to utility customers, or is a Federal power marketing agency as defined in Section 3 of the Federal Power Act (16 U.S.C. 796(19)).

[8] The Petition defined the term ''utility operations-related swap'' to mean any swap that a utility special entity enters into ''to hedge or mitigate commercial risks'' (as that phrase is used in CEA Section 2(h)(7)(A)(ii))—

intrinsically related to the electric or natural gas facilities that the utility special entity owns or

The amendment requested by the Petition would have the effect of allowing a person, in any rolling twelve-month period, to deal in utility-related swaps with utility special entities up to an aggregate gross notional amount not to exceed (together with other swaps in which the person was engaged) the General *De Minimis* Threshold (currently $8 billion) without being required to register as a swap dealer. In support of this amendment, the Petition claimed that:

> The rule amendment is necessary in order to preserve uninterrupted and cost-effective access to the customized, nonfinancial commodity swaps that Petitioners and other Utility Special Entities [as defined in the Petition] use to hedge or mitigate commercial risks arising from their utility facilities, operations and public service obligations.

The Petition explained that this amendment was necessary in order to increase the number of counterparties available to utility special entities to enter into swaps that are necessary for the efficient conduct of the businesses and operations of utility special entities.

C. CFTC Staff Letter No. 12–18 [9]

As the October 12, 2012, effective date for Regulation 1.3(ggg) and the other regulations announced in the Swap Dealer Definition Adopting Release approached, Petitioners submitted to the Commission and several of its divisions a letter requesting no-action relief from the *de minimis* threshold for swaps with certain special entities.[10] In Staff Letter 12–18, the staff of the Commission's Division of Swap Dealer and Intermediary Oversight (Division),[11] concluded that, in light of the representations made in support of the request and in view of the impending effective date for the swap dealer registration requirement, it was appropriate to provide temporary, limited no-action relief with respect to the Special Entity *De Minimis* Threshold for persons dealing in utility related swaps with utility special entities. Staff Letter 12–18 stated that the Division would not recommend that the Commission commence an enforcement action against a person for failure to apply to be registered as a swap dealer, if:

> (1) the Utility Commodity Swaps connected with the person's swap dealing activities into which the person—or any other entity controlling, controlled by or under common control with the person—enters over the course of the immediately preceding 12 months (or following October 12, 2012, if that period is less than 12 months) have an aggregate gross notional amount of no more than $800 million;
>
> (2) the person is not otherwise within the definition of the term ''swap dealer,'' as provided in 17 CFR 1.3(ggg) (*i.e.,* the person—or any other entity controlling, controlled by or under common control with the person—has not entered into swaps as a result of its swap dealing activities in excess of the General *De Minimis* Threshold or (not counting Utility Commodity Swaps) the Special Entity *De Minimis* Threshold); [12] and
>
> (3) the person is not a ''financial entity,'' as defined in section 2(h)(7)(C)(i) of the CEA.

For purposes of Staff Letter 12–18, Division staff defined the term ''utility commodity swap'' [13] to mean a swap where: (1) A party to the swap is a utility special entity; [14] (2) a utility special entity is using the swap in the manner described in Regulation 1.3(ggg)(6)(iii); [15] and (3) the swap is related to an exempt commodity in which both parties to the swap transact as part of the normal course of their physical energy businesses.[16]

The Division selected the $800 million aggregate gross notional amount threshold, which is ten percent of the current General *De Minimis* Threshold of $8 billion, based on suggestions made by certain of the Petitioners and other commenters responding to the Commission's proposed further definition of the term ''swap dealer.'' In a joint comment letter on that proposed definition, two persons recommended a *de minimis* threshold for swaps with special entities that would be one-tenth of the General *De Minimis* Threshold for exclusion from the ''swap dealer'' definition.[17] Another joint comment letter on the proposed further definition of the term ''swap dealer'' (whose signatories included two of the Petitioners) concurred with this recommendation.[18]

The relief made available by Staff Letter 12–18 was not self-executing.

operates or its electric or natural gas operations (or anticipated facilities or operations), or to the utility special entity's supply of natural gas and/or electric energy to other utility special entities or to its public service obligations (or anticipated public service obligations) to deliver electric energy or natural gas service to utility customers.

The Petition defined the term ''intrinsically related'' to include all transactions related to:

> (i) The generation or production, purchase or sale, and transmission or transportation of electric energy or natural gas, or the supply of natural gas and/or electric energy to other utility special entities, or delivery of electric energy or natural gas service to utility customers, (ii) all fuel supply for the utility special entity's electric facilities or operations, (iii) compliance with electric system reliability obligations applicable to the utility special entity, its electric facilities or operations, (iv) compliance with energy, energy efficiency, conservation or renewable energy or environmental statutes, regulations or government orders applicable to the utility special entity, its facilities or operations, or (v) any other electric or natural gas utility operations-related swap to which the utility special entity is a party.

Finally, the Petition stated that a ''utility operations-related swap'' did not include:

> A swap based or derived on, or referencing, commodities in the interest rates, credit, equity, or currency asset classes, or a product type or category in the 'other commodity' asset class that is based or derived on, or referencing, metals, or agricultural commodities or crude oil or gasoline commodities of any grade not used as fuel for electric generation.

[9] [2012–2013 Transfer Binder] Comm. L. Fut. Rep. (CCH) ¶ 32,409 (October 12, 2012). (Staff Letter 12–18). The letter can be accessed on the Commission's Web site at *http://www.cftc.gov/ucm/groups/public/@lrlettergeneral/documents/letter/12-18.pdf.*

[10] This letter was received on October 8, 2012.

[11] The Division is responsible for, among other things, overseeing compliance with the registration requirements applicable to swap dealers.

[12] Division staff emphasized that the aggregate gross notional amount of a person's utility commodity swaps would reduce the $8 billion aggregate gross notional amount General *De Minimis* Threshold for that person.

[13] Based on conversations with industry participants, Division staff decided to use a definition for ''utility commodity swap'' that encompassed the transactions that utility special entities believed were necessary to their business, while avoiding an over-expansive application of the relief.

[14] Either or both parties to the swap could be a utility special entity. For purposes of Staff Letter 12–18, Division staff employed the definition of ''utility special entity'' set forth in the Petition.

[15] That is, the utility special entity is using the swap to hedge a physical position, as described in Regulation 1.3(ggg)(6)(iii).

[16] As defined in CEA Section 1a(20), an ''exempt commodity'' is one that is neither an agricultural commodity, nor an ''excluded commodity'' as defined in CEA Section 1a(19) (which encompasses interest rates, exchange rates, and other instruments, indices and measures of a generally financial nature). At the time Staff Letter 12–18 was issued, Division staff believed it was necessary to limit the relief the Division was providing to situations involving an exempt commodity in which both parties transact as part of the normal course of their physical energy businesses.

[17] Those commenters stated that the Commission should: Set the threshold for the [general] *de minimis* exception at 1/1,000th of a percent of the aggregate gross notional size of the U.S. swap market over the preceding 12 months, or 1/10,000th of a percent of the aggregate gross notional size of the U.S. swap market over the preceding 12 months for swaps in which the counterparty is a 'special entity.' This level of swap dealing activity more accurately corresponds to an amount that arguably could pose a potential risk to the stability of the financial system. Joint comment letter from the Edison Electric Institute and Electric Power Supply Association dated Feb. 22, 2011, at pages 10–11. The letter can be accessed at the Commission's Web site. *See http://comments.cftc.gov/PublicComments/ViewComment.aspx?id=27918.*

[18] *See* joint comment letter from the National Rural Electric Cooperative Association, the American Public Power Association and the Large Public Power Council dated Feb. 22, 2011, at 18. The letter can be accessed at the Commission's Web site. *See http://comments.cftc.gov/PublicComments/ViewComment.aspx?id=27917.* Four other comment letters on the Commission's proposed further definition of the term ''swap dealer'' from energy market participants also recommended that the overall *de minimis* threshold be set at 1/1,000th of a percent of the aggregate gross notional size of the U.S. swap market and that the *de minimis* threshold for swaps with special entities be set at 1/10,000th of a percent of the aggregate gross notional size. *See* the Swap Dealer Definition Adopting Release, 77 FR at 30627, n.390.

Rather, to claim the relief, a person was required to file with the Division a notice [19] that, among other things, identified each utility special entity with which the person has entered into utility commodity swaps connected with the person's swap dealing activities, and that stated with respect to each such utility special entity the total gross notional amount of such utility commodity swaps.

Division staff based its decision to provide relief on several reasons. For one, the Petitioners had represented that that commodity and swap markets are likely to be local and particularized for utility special entities (as opposed to other special entities that do not provide public utility services). Pricing and other terms of electricity and natural gas swaps may vary significantly from region to region so that only market participants active in the physical energy markets in a particular region are able to enter into swaps with the utility special entities. Thus, staff also understood that the counterparties to the utility special entities for hedging swaps were generally other non-financial entities that are active in the physical markets for these products. As a result, the number of counterparties available to the utility special entities is likely to be limited.

Second, staff understood that utility special entities have a unique obligation to provide continuous service to the public; moreover, this continuous service is crucial to public safety. This also may limit the availability of counterparties to utility special entities if, for example, a utility special entity must arrange hedges covering a continuous period of time without interruption. While other special entities, such as municipal governments, also serve the public interest, they do not have the same obligations to provide a continuous supply of a commodity (e.g., electricity or natural gas). Thus, the need for utility special entities to use physical commodity swaps is different from their need to use other types of swaps, and it is different from the need for other special entities to use swaps.

Finally, a significant reduction in the number of swap counterparties available to utility special entities could be especially harmful to the public interest in view of the importance of the energy services provided by the utility special entities.

D. CFTC Staff Letter No. 14–34

Subsequent to the issuance of Staff Letter 12–18, certain Petitioners acknowledged to the Commission the relief the letter had made available, but also raised concerns regarding the effects of the conditions imposed upon persons seeking to avail themselves of that relief, and regarding continuing regulatory uncertainty surrounding some transactions with utility special entities.[20] They characterized specific features of Staff Letter 12–18 (*e.g.,* the requirement to establish that the utility special entity is using the swap to hedge a physical position in an exempt commodity, and the requirement to establish that the counterparty seeking relief is not a ''financial entity'') as imposing administrative costs or creating legal uncertainty such that would-be counterparties were dissuaded from entering into relevant swaps. The Petitioners' Letter thus renewed the relief requested in the previously-filed Petition, claiming that counterparties that had become reluctant to deal with utility special entities were not taking Staff Letter 12–18 as a reason to resume entering into swaps with those entities.[21]

In response to these concerns, on March 21, 2014, the Division issued CFTC Staff Letter No. 14–34 (Staff Letter 14–34),[22] which superseded and broadened the relief provided in Staff Letter 12–18. Specifically, Staff Letter 14–34 stated that the Division would not recommend that the Commission commence an enforcement action against a person for failure to register as a swap dealer if the person—or any other entity controlling, controlled by or under common control with the person—does not include ''utility operations-related swaps'' in calculating whether it has exceeded the Special Entity *De Minimis* Threshold, provided that the person's swap dealing activities have not exceeded the General *De Minimis* Threshold, including utility operations-related swaps.

For purposes of Staff Letter 14–34, a swap is a ''utility operations-related swap'' if:

(1) A party to the swap is a utility special entity; [23]

(2) The utility special entity has represented to the other party that it is using the swap in the manner described in 17 CFR 50.50(c); and

(3) The swap is either (i) an electric energy or natural gas swap; or (ii) The utility special entity has represented to the other party that the swap is associated with: (a) The generation, production, purchase or sale of natural gas or electric energy, the supply of natural gas or electric energy to a utility, or the delivery of natural gas or electric energy service to utility customers; (b) Fuel supply for the facilities or operations of a utility; (c) Compliance with an electric system reliability obligation; or (d) Compliance with an energy, energy efficiency, conservation, or renewable energy or environmental statute, regulation, or government order applicable to a utility.

The Division explained in Staff Letter 14–34 that it was revising the relief provided in Staff Letter 12–18 based on its understanding from discussions with market participants that (1) doing so would allow utility special entities to significantly increase the number of swap counterparties available to utility special entities and thereby lessen potential harm to the public interest in view of the importance of the energy services provided by utility special entities; and (2) acting to increase the volume of utility operations-related swaps between utility special entities and persons not registered as a swap dealer would likely not raise the types of risks that swap dealer registration is intended to prevent.

The Commission does not intend the Proposal to have any effect on the eligibility requirements for the relief currently available under Staff Letter 14–34. In the event the Commission adopts the regulations being proposed herein, the Commission will discuss in the adopting **Federal Register** release the effect of those regulations on the relief provided under Staff Letter 14–34.

[19] The notice was required to be provided by December 31, 2012, and on a quarterly basis thereafter.

[20] Letter from Petitioners to Gary Gensler, CFTC Chairman, dated Nov. 19, 2013 (Petitioners' Letter), available at *http://sirt.cftc.gov/sirt/sirt.aspx?Topic=PendingFilingsandActionsAD&Key=23845*. (One of the original Petitioners did not, however, participate in this follow up letter.) More recently, one of the Petitioners asserted to the Commission that based on an informal survey it conducted, public power utilities subject to the Special Entity *De Minimis* Threshold have on average lost a large percentage of their potential counterparties, and that granting the request made in the Petition would provide a substantial increase in potential counterparties to the affected utilities. *See* Letter from the American Public Power Association to Mark Wetjen, Acting CFTC Chairman, dated March 6, 2014.

[21] On March 11, 2013, a bill (H.R. 1038) was introduced in the U.S. House of Representatives that would amend the CEA to require the Commission to treat a ''utility operations-related swap'' entered into with a ''utility special entity'' as though the swap were entered into with an entity that was not a special entity. The bill would add definitions for ''utility special entity'' and ''utility operations-related swap.'' H.R. 1038 was passed in the House on June 12, 2013. On December 11, 2013, a companion bill with the same text as H.R. 1038 was introduced in the Senate (S. 1802), and that bill was referred to the Committee on Agriculture, Nutrition and Forestry on the same date.

[22] The letter can be accessed on the Commission's Web site at *http://www.cftc.gov/ucm/groups/public/@lrlettergeneral/documents/letter/14-34.pdf*.

[23] For purposes of Staff Letter 14–34, Division staff continued to employ the definition of ''utility special entity'' set forth in the Petition.

II. The Proposal

The Commission recognizes that utility special entities have a specialized purpose—they provide electricity and natural gas production and/or distribution to their customers. Utility special entities have a unique obligation in that the services they provide must be continuous and are important to public safety. Furthermore, the Commission is of the view that utility operations-related swaps have become an integral part of providing continuous service and managing costs in connection therewith.

The specialized nature of utility special entities distinguishes them from other types of special entities (*e.g.,* public pension plans or municipal governments) in that the conduct of their business routinely involves, and indeed often depends upon access to, specific types of swap transactions that permit them to manage the risks of their businesses and to be able to provide electricity and natural gas consistently. As a consequence, they not only need regular access to swaps that directly affect the smooth operation of their business activities, but also are more likely to have developed expertise with swaps directly related to their operations. While the Special Entity *De Minimis* Threshold may represent a reasonable protection for other types of special entities that enter into swaps intermittently and whose activities do not depend on a consistent use of particular swaps, for the reasons stated above, the Commission believes that its application to utility operations-related swaps with utility special entities is not as necessary for their regular operation.[24]

The Commission believes that it is important to address the concerns raised in the Petition regarding the ability of utility special entities to hedge the commercial risks of their electric and natural gas production and delivery businesses including the availability of counterparties with whom utility special entities can enter into customized swaps. The Commission believes that, because the swaps used by utility special entities are typically conducted in localized and specialized markets and the number of available counterparties may be limited, the $25 million amount of the existing Special Entity *De Minimis* Threshold may deter those counterparties from engaging in utility operations-related swaps. Given the obligations of utility special entities to provide continuous service to customers, the Commission preliminarily believes that the public interest would be better served if the likely counterparties for utility operations-related swaps are able to provide liquidity to this limited segment of the market without registering as swap dealers solely on account of exceeding the Special Entity *De Minimis* Threshold. In addition, given the expertise utility special entities are likely to have with utility operations-related swaps, the need for a lower *de minimis* threshold for dealing activity in such swaps with utility special entities is reduced.

Accordingly, the Proposal would permit a person to exclude specified swaps (*i.e.,* utility operations-related swaps) entered into with a defined subset of special entities (*i.e.,* utility special entities) when calculating whether the person has exceeded the Special Entity *De Minimis* Threshold. In light of the foregoing and the Commission's further deliberations in this area, the Commission is now proposing to amend its regulations in order to permit persons engaging in utility operations-related swaps with utility special entities (as these terms are defined in the Proposal) to exclude such swaps solely for purposes of calculating whether such persons' swap dealing activities have exceeded the Special Entity *De Minimis* Threshold.

A. Adding an Exclusion for Utility Operations-Related Swaps With Utility Special Entities

Regulation 1.3(ggg) defines the term ''swap dealer.'' Currently, Regulation 1.3(ggg)(4)(i) provides for a *de minimis* exception from the swap dealer definition, under either the General *De Minimis* Threshold or the Special Entity *De Minimis* Threshold. The Proposal would amend Regulation 1.3(ggg)(4)(i) to permit persons engaging in utility operations-related swaps with utility special entities to exclude such swaps solely for purposes of determining whether they have exceeded the Special Entities *De Minimis* Threshold. This would be done by redesignating current Regulation 1.3(ggg)(4)(i) as Regulation 1.3(ggg)(4)(i)(A), placing the text ''*In General*'' before the redesignated regulation and adding a new Regulation 1.3(ggg)(4)(i)(B), captioned ''*Utility Special Entities.*''

Regulation 1.3(ggg)(4)(i)(B)(*1*) would provide that solely for purposes of determining whether a person's swap dealing activity has exceeded the $25 million aggregate gross notional amount threshold set forth in Regulation (ggg)(4)(i)(A) for swaps in which the counterparty is a special entity, a person may exclude utility operations-related swaps in which the counterparty is a utility special entity. Proposed Regulation 1.3(ggg)(4)(i)(B)(*1*) would not, however, permit a person to exclude the gross notional amount of such utility operations-related swaps in determining whether the person has exceeded the General *De Minimis* Threshold. In other words, a person would add the aggregate gross notional amount of the utility operations-related swaps it enters into with utility special entities to the gross notional amount of any other swaps entered into by it during the preceding twelve months in determining whether the person has exceeded the General *De Minimis* Threshold.[25]

As is the case for other swaps, in calculating the gross notional amount of utility operations-related swap positions entered into with utility special entities, a person must also include swap positions entered into by any entity controlling, controlled by or under common control with the person, and if a stated notional amount of a swap is leveraged or enhanced by the structure of the swap, the threshold calculation would be required to be based ''on the effective notional amount of the swap rather than on the stated notional amount.''

Under the Proposal, a person would be required to file a one-time notice to rely on the exclusion provided by the new rule.[26] Specifically, the notice would be required to be filed electronically with the National Futures Association (NFA),[27] to provide such information as the person's name, address, and a contact, and to contain a

[24] The Commission is not considering, as part of this proposed rulemaking, altering the Special Entity *De Minimis* Threshold with respect to other types of swaps or special entities.

[25] A person likewise would include the aggregate gross notional amount of swaps entered into with other types of special entities to the same extent required for swaps generally in determining whether the person's swap dealing activity has exceeded the General *De Minimis* Threshold.

[26] *See* proposed Regulation 1.3(ggg)(4)(i)(B)(*4*).

[27] NFA is a futures association registered as such with the Commission pursuant to CEA Section 17. Although persons relying on the exclusion in Regulation 1.3(ggg)(4)(i)(A) would be outside the swap dealer definition and therefore not subject to the requirement in Regulation 170.16 that a swap dealer must become an NFA member, a requirement to file a notice with NFA would be consistent with past action the Commission has taken with regard to requiring other persons seeking to rely on an exception or exclusion from a term defined in the Act—*i.e.,* by requiring such persons to file a notice with NFA. *See, e.g.,* 62 FR 52088 (Oct. 6, 1997), authorizing NFA to process notices of eligibility for exclusion from the definition of the term ''commodity pool operator'' under Regulation 4.5, and 72 FR 1658 (Jan. 16, 2007), establishing that a person seeking an exclusion under Regulation 4.5 must file its claim with NFA electronically. In the event the Commission adopts the proposing filing requirement, it will concurrently delegate to NFA the authority to accept the filing.

representation that the person meets the criteria of the exclusion for utility operations-related swaps with utility special entities in Regulation 1.3(ggg)(4)(i)(B). Congress has determined that special entities merit additional protections when engaging in swap transactions, and has adopted, for example, heightened business conduct requirements on swap dealers advising and dealing with special entities.[28] Because the Proposal, if adopted, would permit persons to engage in a greater aggregate gross notional amount of swaps with utility special entities, who Congress has determined warrant additional protections under the CEA, without registering as swap dealers (and becoming subject to corresponding business conduct standards), it is important that the Commission be able to know who the persons are that rely on the exclusion under the Proposal. The proposed notice filing will help the Commission to monitor compliance with the swap dealer registration requirement, and better ensure that the exclusion under the Proposal serves the intended purpose of enabling utility special entities to manage operational risks in a cost-effective way.

Additionally, a person relying on the exclusion under the Proposal would be required to maintain in accordance with Regulation 1.31 books and records that substantiate its eligibility to rely on this exclusion.[29]

B. New Definitions

1. ''Utility Special Entity''

Proposed Regulation 1.3(ggg)(4)(i)(B)(*2*) would define the term ''utility special entity'' to mean a special entity [30] that owns or operates electric or natural gas facilities, electric or natural gas operations or anticipated electric or natural gas facilities or operations; supplies natural gas or electric energy to other utility special entities; has public service obligations or anticipated public service obligations under Federal, State or local law or regulation to deliver electric energy or natural gas service to utility customers; or is a Federal power marketing agency as defined in Section 3 of the Federal Power Act, 16 U.S.C. 796(19). This definition is essentially identical to the definition of ''utility special entity'' in the Petition.

2. ''Utility Operations-Related Swap''

Proposed Regulation 1.3(ggg)(4)(i)(B)(*3*) would define the term ''utility operations-related swap,'' to mean a swap to which at least one of the parties is a utility special entity that is using the swap to hedge or mitigate commercial risk, and that is related to an exempt commodity. In addition, the swap must be an electric energy or natural gas swap, or associated with the operations or compliance obligations of a utility special entity in a manner more fully set forth in Regulation 1.3(ggg)(4)(i)(B)(*3*)(*iv*).

In this regard, the Commission notes that, in determining whether a person may rely on the proposed exclusion for utility operations-related swaps with utility special entities, it may not always be possible for the person to establish with absolute certainty that a counterparty is a utility special entity, that the counterparty is using a swap to hedge or mitigate commercial risk, that the swap is related to an exempt commodity, or that the swap meets the other requirements to come within the definition of a utility operations-related swap. Therefore, the Commission intends to take the position that a person seeking to rely on the (proposed) exclusion may reasonably rely upon a representation by the utility special entity that it is a utility special entity and that the swap is a utility operations-related swap, as such terms are defined in proposed Regulation 1.3(ggg)(4)(i)(B), so long as the person was not aware, and should not reasonably have been aware, of facts indicating the contrary.[31]

III. Request for Comments

The Commission seeks comments regarding the nature and application of an exclusion for utility operations-related swaps with utility special entities for purposes of calculating whether a person's swap dealing activities have exceeded the Special Entity *De Minimis* Threshold, as provided for in the Proposal. Set forth below, then, is a non-exclusive list of questions to which the Commission seeks responses.

1. Will the Proposal enable utility special entities to adequately hedge their operational risks in a cost-effective manner by entering into utility operations-related swaps? If not, explain why, and indicate ways in which the Proposal could be modified in order to accomplish this goal.

2. Are there factual errors or omissions in the Commission's understanding and analysis of the issues faced by utility special entities and the efforts to date to resolve those issues?

3. Is it appropriate to treat utility operations-related swaps with utility special entities differently than other swaps with special entities for purposes of determining whether a person is a swap dealer?

4. Does the definition of utility operations-related swap in proposed Regulation 1.3(ggg)(i)(4)(B)(*3*) adequately encompass the range of swap transactions with respect to which it is appropriate to, in effect, set a higher *de minimis* threshold in the context of persons dealing with utility special entities? If not, in what way(s) should the definition be expanded or narrowed and why? More specifically, should the scope of the swaps identified in Regulation 1.3(ggg)(i)(4)(B)(*3*)(*iv*) be expanded or narrowed? Are there swaps that would meet the requirements of Regulation 1.3(ggg)(i)(4)(B)(*3*)(*i*), (*ii*) and (*iii*), but not of Regulation 1.3(ggg)(i)(4)(B)(*3*)(*iv*) that should be included? Is Regulation 1.3(ggg)(i)(4)(B)(*3*)(*iv*) too restrictive or not restrictive enough?

5. One of the conditions to coming within the definition of the term ''utility operations-related swap'' is that the party to the swap that is a utility special entity is using the swap in the manner prescribed in Regulation 50.50(c)—*i.e.,* to hedge or mitigate commercial risk. What issues might there be in determining whether a swap constitutes hedging activity for purposes of complying with this proposed rule? Is reference to Regulation 50.50(c) for defining hedging activities appropriate? Are there alternative definitions that should be considered (*e.g.,* Regulation 1.3(ggg)(6)(iii))? Should the definitions for hedging activities in Regulation 50.50(c) and Regulation 1.3(ggg)(6)(iii) be harmonized? If so, how (*e.g.,* by following Regulation 50.50(c) or Regulation 1.3(ggg)(6)(iii) or some iteration of both) and why? Please provide any estimates of costs of compliance with any proposed alternative as compared to the cost of compliance with Regulation 50.50(c).

6. Another condition to coming within the proposed definition of the term ''utility operations-related swap'' is that the swap be related to an exempt commodity (as defined in CEA Section 1a(20)). Is this condition appropriate? If

[28] *See* CEA Sections 4s(h)(4) and 4s(h)(5).

[29] This requirement is consistent with other similar Commission regulations, such as the requirement in Regulation 4.7 that commodity pool operators and commodity trading advisors claiming relief under that regulation maintain books and records relating to their eligibility to claim that relief.

[30] As noted above, the term ''special entity'' is defined in CEA Section 4s(h)(2)(c) and Regulation 23.401(c).

[31] This position is consistent with the Commission's approach to permitting reliance on representations for other purposes, such as the requirement in Regulation 50.50(b)(3) that a reporting party have a reasonable basis to believe that its counterparty meets the requirements for the exception to the clearing requirement for end-users. *See* 77 FR 42560, 42570 (July 19, 2012).

not, why not and/or how and why should it be modified?

7. Should the definition of utility operations-related swap be limited to swaps in which both parties to the swap transact as part of the normal course of their physical energy businesses?

8. The Proposal would allow persons to, in effect, treat utility operations-related swaps in which the counterparty is a utility special entity like swaps with a counterparty that is not a special entity in determining whether the person has exceeded a *de minimis* threshold under Regulation 1.3(ggg)(4)(i)(A). Thus, utility operations-related swaps with utility special entities would be subject to the General *De Minimis* Threshold under Regulation 1.3(ggg)(4)(i), which is currently set at the $8 billion phase in level. Is that an appropriate threshold, or should the *de minimis* threshold for such swaps be higher or lower? What considerations support using a different amount? Should the *de minimis* threshold for utility operations-related swaps be set at $3 billion, the level of the General *De Minimis* Threshold without application of the $8 billion phase-in level, in light of the special protections afforded to special entities under the CEA? Should the threshold be set at an amount equal to a percentage of the gross notional amount of the General *De Minimis* Threshold, such that an increase or decrease in the gross notional amount of the General *De Minimis* Threshold would result in a proportionate change in the *de minimis* threshold for utility operations-related swaps?

9. Should the nature of the person entering into swaps with a utility special entity determine whether the person can rely on the exclusion for utility operations-related swaps under the Proposal (*e.g.,* by limiting the exclusion to persons who are not ''financial entities,'' as Staff Letter 12–18 limited relief to such persons)? If so, what characteristics or factors should be considered?

10. Should the Commission specify the books and records a person must maintain to substantiate that the person may rely on the (proposed) exclusion for utility operations-related swaps?

11. Would the Proposal impact the Commission's ability to carry out its market oversight responsibilities with regard to the overall derivatives market? If so, how?

12. To what extent, if any, would the Proposal reduce transparency with regard to utility operations-related swaps, counterparties to such transactions or the broader derivatives market?

13. Does the Proposal serve the public interest? In what ways? How could the Proposal be improved to better serve the public interest?

14. How should the Commission balance the public interest in having the additional protections that a *de minimis* threshold for transactions with utility special entities that is lower than the General *De Minimis* Threshold would afford, versus the public interest in maintaining the ability for utility special entities to enter hedging transactions?

15. As noted above, it is important that the Commission be able to know who the persons are that rely on the exclusion under the Proposal to monitor compliance with the swap dealer registration requirement, and better ensure that the exclusion under the Proposal serves the intended purpose of enabling utility special entities to manage operational risks in a cost-effective way. Will the notice requirement in proposed Regulation 1.3(ggg)(4)(i)(*B*)(*4*) enable the Commission to achieve these objectives? If not, why? Is there an alternative method for the Commission to obtain the relevant information and achieve the stated objectives without requiring a notice filing?

16. Are there any special entities (or types of special entities) who come within the proposed definition of ''utility special entity'' (as set forth in proposed Regulation 1.3(ggg)(4)(i)(B)(*2*)), but are not likely to have expertise in utility operations-related swaps? If yes, describe those entities. Should persons dealing in swaps with those entities be treated differently than persons dealing with other utility special entities under the Proposal?

17. Should the description of swap dealing activity in the swap dealer definition be more specifically described for the purposes of defining swap dealing with utility special entities? What specific dealing or non-dealing activities should be taken into account given the nature of utility special entities? Have any compliance issues arisen with respect to the description of swap dealing activity in the swap dealer definition? If so, how should the Commission clarify the description?

18. Will utility special entities benefit if the Commission revised its interpretation regarding forward contracts with embedded volumetric optionality as described in the swap definition adopting release? [32] If so, how? Is the seven element interpretation appropriate for determining whether a forward contract with volumetric optionality qualifies for the forward contract exclusion from the definition of a swap? If not, should the Commission revise the interpretation or adopt an alternative standard? If so, what should the revised interpretation or standard be?

19. Regulation 1.3(ggg)(6)(iv) provides that swaps entered into by a floor trader who meets certain conditions do not need to be counted in determining whether the floor trader is a swap dealer. Should the Commission afford similar treatment to swaps entered into with utility special entities by their counterparties? For purposes of the *de minimis* calculation under the swap dealer definition, why should the Commission hold floor traders and entities dealing with utility special entities to different standards?

The Commission welcomes comments on any other issues concerning the subject matter of this **Federal Register** release and the *de minimis* exception from the swap dealer definition for persons engaging in swap transactions with special entities, in general.

IV. Related Matters

A. Regulatory Flexibility Act

The Regulatory Flexibility Act [33] requires that Federal agencies consider whether the rules they propose will have a significant economic impact on a substantial number of small entities and, if so, they must provide a regulatory flexibility analysis respecting the impact. Whenever an agency publishes a general notice of proposed rulemaking for any rule, pursuant to the notice-and-comment provisions of the Administrative Procedure Act [34] a regulatory flexibility analysis or certification typically is required.[35] The Proposal, if adopted, will not have a significant economic impact on affected persons because the Proposal will primarily relieve them from regulatory obligations that would otherwise apply to them. That is, the (proposed) exclusion for utility operations-related swaps will permit counterparties to engage with utility special entities in utility operations-related swaps to a degree that would, absent the proposed exclusion, require them to register with the Commission as a swap dealer, and to comply with regulations applicable to swap dealers.[36] While the Proposal does

[32] *See* 77 FR 48238 (Aug. 13, 2012).

[33] 5 U.S.C. 601 *et seq.*

[34] 5 U.S.C. 553. The Administrative Procedure Act is found at 5 U.S.C. 500 *et seq.*

[35] *See* 5 U.S.C. 601(2), 603–05.

[36] *See, e.g.,* Part 23 of the Commission's regulations, which establishes, among other things,

Continued

require a notice filing in order to rely on the (proposed) exclusion for utility operations-related swaps, to the extent that any small entities opt to rely on the exclusion, the notice requirement will not have a significant economic impact on those entities.[37] Moreover, the number of potential counterparties seeking to rely on the (proposed) exclusion may be limited, given the local nature of the relevant markets.

Accordingly, the Chairman, on behalf of the Commission, hereby certifies pursuant to 5 U.S.C. 605(b) that the Proposal will not have a significant economic impact on a substantial number of small entities.

B. Paperwork Reduction Act

The Paperwork Reduction Act (PRA)[38] provides that an agency may not conduct or sponsor, and a person is not required to respond to, a collection of information unless it displays a valid control number from the Office of Management and Budget (OMB). This rulemaking contains notification and recordkeeping requirements that are collections of information within the meaning of the PRA. Accordingly, the Commission will submit the required information collection requests to OMB.

1. Collections of Information

This rulemaking contains two elements that would qualify as collections of information. First, proposed Regulation 1.3(ggg)(4)(i)(B) would create an exclusion from the Special Entity *De Minimis* Threshold with regard to specified swaps (utility operations-related swaps) entered into with a defined subset of special entities (utility special entities). As proposed, a person seeking to rely on the exclusion would be required to file a one-time notice. Specifically, and as explained above, the notice would be required to be filed electronically with NFA, to provide such information as the person's name, address, and a contact, and to contain a representation that the person meets the criteria of the exclusion for utility operations-related swaps in Regulation 1.3(ggg)(4)(i)(B). Based upon the information currently available to the Commission, an accurate estimate of the persons who may rely on the exclusion under the Proposal, if adopted, cannot be made. Nevertheless, the Commission is preliminarily using a conservative estimate of 100 potential counterparties of utility special entities. The Commission invites comments regarding whether this is a reasonable estimate to use for PRA paperwork burden calculations.

Commission staff estimates that ascertaining whether a person is eligible to rely on the exclusion for utility operations-related swaps under the Proposal will take no more than one hour. Because the information required for the notice is readily known to the person, staff estimates that preparing and filing the notice will take no more than one-half hour. The notice will be filed only once, but a person who has filed a notice will periodically check to ensure that it remains eligible. Staff estimates that because such verification will be based on information within the person's control, it will not require more than an hour annually.

Consequently, the Commission preliminarily estimates the burden associated with the required notice filing would be as follows:

Number of Respondents: 100.

Frequency of Response: Annually (initial filing and ongoing compliance).

Average Burden Hours per Response: 1.2.

Estimated gross annual reporting burden: $79,680.

On this basis, the Commission will request a new collection of information control number from OMB.

Proposed Regulation 1.3(ggg)(4)(i)(B) would also require a person seeking to rely on the proposed exclusion for utility operations-related swaps to maintain books and records in accordance with Regulation 1.31 that substantiate its eligibility. The Commission notes that it has previously requested and obtained OMB Control Number 3038–0090 pertaining to Regulation 1.31. The Commission preliminarily believes that each person claiming the proposed exclusion will need to establish a procedure to maintain the necessary books and records substantiating ongoing eligibility with for reliance on the proposed exclusion. In addition, each such person will incur some burden to create and maintain relevant records. As noted above, the Commission preliminarily estimates 100 persons may seek to rely on the exclusion for utility operations-related swaps under the Proposal, if adopted. Although the books and records required to substantiate initial and ongoing eligibility to rely on the exclusion will be books and records that the person has already prepared in the course of engaging in utility operations-related swaps, Commission staff estimates that the person will incur an hour of burden initially and an hour annually thereafter as a result of consulting and reviewing those books and records. Consequently, the Commission preliminarily estimates the recordkeeping burden associated with the proposed Regulation 1.3(ggg)(4)(i)(B) would be as follows:

Number of Respondents: 100.

Frequency of Response: Annually.

Average Burden Hours per Response: 1.

Estimated gross annual reporting burden: $16,100.

On this basis, the Commission will submit a request to amend OMB Control Number 3038–0090. The Commission preliminarily believes that the persons who are likely to rely on the exclusion for utility operations-related swaps may already have procedures in place to comply with this requirement so that actual burdens may be less—and possibly much less—for those persons.

2. Information Collection Comments

The Commission invites comment on any aspect of the proposed information collection requirements discussed above. Pursuant to 44 U.S.C. 3506(c)(2)(B), the Commission will consider public comments on such proposed requirements in:

- Evaluating whether the proposed collection of information is necessary for the proper performance of the functions of the Commission, including whether the information will have a practical use;
- Evaluating the accuracy of the Commission's estimate of the burden of the proposed collection of information, including the validity of the methodology and assumptions used;
- Enhancing the quality, utility, and clarity of the information proposed to be collected; and
- Minimizing the burden of collection of information on those who are to respond, including through the use of appropriate automated, electronic, mechanical, or other technological information collection techniques.

Copies of the submission from the Commission to OMB are available from the CFTC Clearance Officer, 1155 21st Street NW., Washington, DC 20581, (202) 418–5160 or from *http://RegInfo.gov*. Persons desiring to submit comments on the proposed information collection requirements should send those comments to:

- The Office of Information and Regulatory Affairs, Office of Management and Budget, Room 10235,

reporting, recordkeeping and business conduct requirements for swap dealers.

[37] *See* 77 FR 2613, 2620 (Jan. 19, 2012), wherein the Commission stated that in the experience of the Commission, complying with the registration process regulations—a far more burdensome process than the notice filing that would be required under the Proposal—has not had a significant economic effect on a substantial number of small entities.

[38] 44 U.S.C. 3501 *et seq.*

New Executive Office Building, Washington, DC 20503, Attn: Desk Officer of the Commodity Futures Trading Commission;

- (202) 395–6566 (fax); or
- *OIRAsubmissions@omb.eop.gov* (email).

Please provide the Commission with a copy of submitted comments so that all comments can be summarized and addressed in the final rulemaking, and please refer to the **ADDRESSES** section of this rulemaking for instructions on submitting comments to the Commission. OMB is required to make a decision concerning the proposed information collection requirements between thirty (30) and sixty (60) days after publication of the Proposal in the **Federal Register**. Therefore, a comment to OMB is best assured of receiving full consideration if OMB (as well as the Commission) receives it within thirty (30) days of publication of the Proposal. The time frame for commenting on the PRA does not affect the deadline established by the Commission on the Proposal, provided in the **DATES** section of this rulemaking.

C. Cost-Benefit Considerations

CEA Section 15(a) requires the Commission to consider the costs and benefits of its actions before promulgating a regulation under the CEA or issuing certain orders. CEA Section 15(a) further specifies that the costs and benefits shall be evaluated in light of five broad areas of market and public concern: (1) Protection of market participants and the public; (2) efficiency, competitiveness and financial integrity of futures markets; (3) price discovery; (4) sound risk management practices; and (5) other public interest considerations. The Commission considers the costs and benefits resulting from its discretionary determinations with respect to the Section 15(a) factors, and seeks comments from interested persons regarding the nature and extent of such costs and benefits.

1. *Background.* The Commission is proposing to amend its regulations to permit a person to exclude utility operations-related swaps with utility special entities (as such terms are defined in the Proposal) in calculating the aggregate gross notional amount of the person's swap positions for purposes of the Special Entity *De Minimis* Threshold.

As discussed above, CEA Section 1a(49) defines the term ''swap dealer,'' and Regulation 1.3(ggg) further defines that term. A person who comes within the swap dealer definition is subject to registration as such with the Commission and the regulatory requirements applicable to swap dealers.[39] Regulation 1.3(ggg)(4)(i) provides an exception from the swap dealer definition for persons who engage in a *de minimis* amount of swap dealing activity. Currently, under Regulation 1.3(ggg)(4)(i) persons who engage in swap dealing activity with special entities are excepted from the swap dealer definition so long as the swap positions connected with those dealing activities into which the person enters over the course of the immediately preceding 12 months have an aggregate gross notional amount of no more than $25 million (*i.e.,* the Special Entity *De Minimis* Threshold). These regulatory provisions set the baseline for the Commission's consideration of the costs and benefits of the Proposal. That is, the Commission considers the costs and benefits that would result from allowing persons to exclude utility operations-related swaps with utility special entities from the Special Entity *De Minimis* Threshold ($25 million), such that the *de minimis* threshold with respect to such swaps would the same as for swaps not involving a special entity (*i.e.,* the General *De Minimis* Threshold, currently set at $8 billion), subject to the requirements set forth in the Proposal.[40]

2. *Costs.* As noted by the Commission in the Swap Dealer Definition Adopting Release, ''a *de minimis* exception, by its nature, will eliminate key counterparty protections provided by Title VII for particular users of swaps . . . [and] [t]he broader the exception, the greater the loss of protection.'' [41] In adopting the Special Entity *De Minimis* Threshold, the Commission explained that the $25 million threshold was ''appropriate in light of the special protections that Title VII affords to special entities.'' The Commission also recognized the ''serious concerns raised by commenters'' regarding the application of the *de minimis* exception to swap dealing with special entities in light of losses that special entities have incurred in the financial markets.[42]

Under the Proposal, a greater quantity of swap dealing with utility special entities would potentially be undertaken without the benefits to utility special entities of that dealing activity being subject to swap dealer regulation.[43] In addition, the Proposal will impose costs associated with ascertaining whether a person is eligible to rely on the proposed exclusion for utility operations-related swaps and the preparation and submission of the notice required to rely on the exclusion under proposed Regulation 1.3(ggg)(4)(i)(B)(2). Finally, to the extent that a person relying on the exclusion under the Proposal would be required to keep books and records it would not otherwise keep, in order to substantiate its eligibility for the exclusion, that represents another potential cost. Comments are invited regarding the extent of all of these costs, and any other costs that would result from adoption of the Proposal, including estimates of monetary or other measurements thereof.

3. *Benefits.* With respect to benefits, the Commission preliminarily believes that the Proposal will benefit utility special entities and the public by encouraging a greater number of prospective counterparties to engage with utility special entities in utility operations-related swaps.[44] Because of the local and particularized nature of the electric and natural gas production and distribution, the number of potential swap counterparties for utility special entities seeking to hedge commercial risk is more limited than for other special entities seeking to hedge non-physical commodities. The number of counterparties to utility special entities may be further limited due to the unique obligation of utilities to provide continuous service to the public. These considerations may be more critical given the important role energy services play in public safety and commerce. Thus, limiting the number of counterparties to utility special entities could be counter to the public interest.

Accordingly, increasing the number of potential counterparties available to utility special entities will enable utility special entities to practice sound, cost-effective risk management and to

[39] *See, e.g.,* Part 23 of the Commission's regulations.

[40] While Staff Letter 14–34 currently provides no-action relief in circumstances, and subject to requirements, that are substantially similar to those of the Proposal, the Commission preliminarily believes that Staff Letter 14–34 should not set or affect the baseline from which the Commission considers the costs and benefits of the Proposal. This is because, as it indicates, Staff Letter 14–34 does necessarily represent the position or view of the Commission or any other office or division of the Commission.

[41] *See* 77 FR at 30596, 30627–30628 (May 23, 2012).

[42] *See Id.* at 30633.

[43] *See Id.* at 30707 (stating that the benefits of swap dealing regulation include customer protection, market orderliness and market transparency).

[44] The Commission explained in the Swap Dealer Definition Adopting Release that ''[i]n principle, a higher [*de minimis*] threshold would promote a larger pool of swap-dealing entities (since entities with swap dealing activity below the threshold need not incur costs to comply with swap dealer regulations), meaning more potential counterparties available to swap users.'' *See Id.*

efficiently operate and conduct their business. This will, in turn, help utility special entities meet their obligations to provide continuous services to the public in a cost-effective manner, and will help protect the public interest and safety that is dependent on such energy services. Comments are sought regarding these benefits and any other benefits resulting from adoption of the Proposal, and to the extent they can be quantified, estimates of the monetary or other value thereof.

4. *Section 15(a).* Section 15(a) of the CEA requires the Commission to consider the effects of its actions in light of the following five factors:

a. Protection of Market Participants and the Public. The Proposal will allow utility special entities to engage in certain swaps to a greater extent than other special entities, without the protections of swap dealer registration and regulation. However, given the limited circumstances for which the proposed exclusion would apply, and the requirements persons must meet to rely on the exclusion, the Commission preliminarily believes the costs to the affected utilities, market participants and the public will be limited. Moreover, these costs will be counteracted by the benefits the Proposal will provide to utility special entities and the public, namely, enabling utility special entities to efficiently hedge and manage risk, and to meet their obligations to provide vital energy services to the public in a consistent and cost-effective manner.

b. Efficiency, Competitiveness, and Financial Integrity of Markets. The Commission preliminarily believes that the Proposal will enhance efficiency and competitiveness in the electricity and natural gas markets by encouraging prospective counterparties to engage in swap transactions with utility special entities. The availability of additional swap counterparties in these markets will enhance competition between counterparties, which will, in turn benefit utility special entities by lowering transaction costs for utility special entities.

c. Price Discovery. It is unlikely that facilitating more counterparties for utility special entities to trade with will have a significant impact on price discovery. Price discovery is the process by which prices for underlying commodities may be determined or inferred through market prices. The addition of more counterparties willing to trade with utility special entities may improve, but not necessarily adversely impact, the prices that the utility special entities receive on their swap contract transactions, but the overall effect on the determined or inferred prices for the underlying commodities is indeterminate. Interested persons are invited to comment on this conclusion.

d. Sound Risk Management. The Commission preliminarily believes that if counterparties refrain from transacting in swaps with utility special entities because of the regulatory costs associated with swap dealer registration and regulation, the ability of utility special entities to hedge commercial risks will be impaired, particularly in cases for which the number of counterparties available becomes very limited. Mitigating the costs and regulatory concerns of potential counterparties by permitting them to transact with utility special entities without being subject to swap dealer registration and regulation will enable utility special entities to better manage their commercial risk.

e. Other Public Interest Considerations. As discussed above, the Commission preliminarily believes the proposed rule will enable utility special entities to practice sound, cost-effective risk management and to more effectively operate and conduct their business. This may, in turn, help utility special entities meet their obligations to provide continuous services to the public in a more cost-effective manner.

5. Request for Comment

The Commission invites comments from the public on all aspects of its preliminary consideration of costs and benefits associated with the Proposal. The questions below relate to areas that the Commission preliminarily believes may be relevant. In addressing these or any other aspect of the Commission's preliminary assessment, commenters are encouraged to submit any data or other information that they may have quantifying or qualifying the costs and benefits of the Proposal.

a. What are the costs and benefits to market participants, if any, associated with the Proposal? Please explain and, to the extent possible, quantify these costs.

b. What are the costs and benefits to the public associated with the Proposal? Please explain and, to the extent possible, quantify these costs.

c. Would a *de minimis* threshold other than the General *De Minimis* threshold for transactions with utility special entities as set forth in the Proposal impact the costs and/or benefits to market participants or the public? Is there a threshold level that would be optimal, *i.e.,* maximize net benefits?

d. Has the Commission identified all of the relevant categories of costs and benefits in its preliminary consideration of the costs and benefits associated with the Proposal? Please describe any additional categories of costs or benefits that the Commission should consider with respect to the Proposal.

e. To what extent does the Proposal protect market participants and the public? How, if at all, could the Proposal be altered to better protect market participants and the public?

f. How, if at all, does the Proposal affect the efficiency, competitiveness, and financial integrity of markets?

g. How, if at all, does the Proposal affect price discovery for utility operations-related swaps? For the swaps market more generally?

h. How, if at all, does the Proposal affect sound risk management for utility special entities? For participants in the swaps market more generally?

i. How, if at all, does the Proposal affect the public interest?

List of Subjects in 17 CFR Part 1

De minimis exception, Registration, Special Entities, Swap dealers, Swaps, Utility operations-related swaps, Utility special entities.

For the reasons discussed in the preamble, the Commission proposes to amend 17 CFR part 1 as follows:

PART 1—GENERAL REGULATIONS UNDER THE COMMODITY EXCHANGE ACT

■ 1. The authority citation for part 1 is revised to read as follows:

Authority: 7 U.S.C. 1a, 2, 5, 6, 6a, 6b, 6c, 6d, 6e, 6f, 6g, 6h, 6i, 6k, 6l, 6m, 6n, 6o, 6p, 6r, 6s, 7, 7a–1, 7a–2, 7b, 7b–3, 8, 9, 10a, 12, 12a, 12c, 13a, 13a–1, 16, 16a, 19, 21, 23, and 24 (2012).

■ 2. Amend § 1.3 by revising paragraph (ggg)(4)(i) to read as follows:

§ 1.3 Definitions.

* * * * *

(ggg) * * *

(4) *De minimis exception*—(i)(A) *In General.* Except as provided in paragraph (ggg)(4)(vi) of this section, a person that is not currently registered as a swap dealer shall be deemed not to be a swap dealer as a result of its swap dealing activity involving counterparties, so long as the swap positions connected with those dealing activities into which the person—or any other entity controlling, controlled by or under common control with the person—enters over the course of the immediately preceding 12 months (or following the effective date of final rules implementing Section 1a(47) of the Act, 7 U.S.C. 1a(47), if that period is less than 12 months) have an aggregate gross

notional amount of no more than $3 billion, subject to a phase in level of an aggregate gross notional amount of no more than $8 billion applied in accordance with paragraph (ggg)(4)(ii) of this section, and an aggregate gross notional amount of no more than $25 million with regard to swaps in which the counterparty is a ''special entity'' (as that term is defined in Section 4s(h)(2)(C) of the Act, 7 U.S.C. 6s(h)(2)(C), and § 23.401(c) of this chapter), except as provided in paragraph (ggg)(4)(i)(B) of this section. For purposes of this paragraph, if the stated notional amount of a swap is leveraged or enhanced by the structure of the swap, the calculation shall be based on the effective notional amount of the swap rather than on the stated notional amount.

(B) *Utility Special Entities.* (*1*) Solely for purposes of determining whether a person's swap dealing activity has exceeded the $25 million aggregate gross notional amount threshold set forth in paragraph (ggg)(4)(i)(A) of this section for swaps in which the counterparty is a special entity, a person may exclude ''utility operations-related swaps'' in which the counterparty is a ''utility special entity.''

(*2*) For purposes of this paragraph (4)(i)(B) a ''utility special entity'' is a special entity, as that term is defined in Section 4s(h)(2)(C) of the Act, 7 U.S.C. 6s(h)(2)(C), and § 23.401(c) of this chapter, that:

(*i*) Owns or operates electric or natural gas facilities, electric or natural gas operations or anticipated electric or natural gas facilities or operations;

(*ii*) Supplies natural gas or electric energy to other utility special entities;

(*iii*) Has public service obligations or anticipated public service obligations under Federal, State or local law or regulation to deliver electric energy or natural gas service to utility customers; or

(*iv*) Is a Federal power marketing agency as defined in Section 3 of the Federal Power Act, 16 U.S.C. 796(19).

(*3*) For purposes of this paragraph (ggg)(4)(i)(B) a ''utility operations-related swap'' is a swap that meets the following conditions:

(*i*) A party to the swap is a utility special entity;

(*ii*) A utility special entity is using the swap in the manner described in § 50.50(c) of this chapter;

(*iii*) The swap is related to an exempt commodity, as that term is defined in Section 1a(20) of the Act; and

(*iv*) The swap is an electric energy or natural gas swap; or the swap is associated with: The generation, production, purchase or sale of natural gas or electric energy, the supply of natural gas or electric energy to a utility special entity, or the delivery of natural gas or electric energy service to customers of a utility special entity; fuel supply for the facilities or operations of a utility special entity; compliance with an electric system reliability obligation; or compliance with an energy, energy efficiency, conservation, or renewable energy or environmental statute, regulation, or government order applicable to a utility special entity.

(*4*) Any person relying upon the exclusion in paragraph (ggg)(4)(i)(B)(*1*) of this section must file electronically with the National Futures Association a Notice of Reliance on Exclusion for Utility Operations-Related Swaps with Utility Special Entities. The notice must be filed by no later than [effective date of final rule] or the date the person first engages in such swaps, whichever is later. The notice must contain: The person's name, main business address, and main telephone number; the name of a contact; and a statement signed by an individual with authority to bind the person that the person meets the criteria for the exclusion in Regulation 1.3(ggg)(4)(i)(B) (paragraph (ggg)(4)(i)(B) of this section).

(*5*) Each person who relies on the exclusion in paragraph (ggg)(4)(i)(B) of this section must maintain books and records, in accordance with § 1.31, that substantiate its eligibility to rely on the exclusion in paragraph (ggg)(4)(i)(B) of this section.

* * * * *

Issued in Washington, DC, on May 23, 2014, by the Commission.

Christopher J. Kirkpatrick,

Deputy Secretary of the Commission.

Note: The following appendix will not appear in the Code of Federal Regulations.

Appendix to Exclusion of Utility Operations-Related Swaps With Utility Special Entities From De Minimis Threshold for Swaps With Special Entities—Commission Voting Summary

On this matter, Acting Chairman Wetjen and Commissioner O'Malia voted in the affirmative. No Commissioner voted in the negative.

[FR Doc. 2014–12469 Filed 5–30–14; 8:45 am]

BILLING CODE 6351–01–P

FEDERAL COMMUNICATIONS COMMISSION

47 CFR Parts 1, 2, 90, 95, and 96

[GN Docket No. 12–354; FCC 14–49]

Commission Seeks Comment on Shared Commercial Operations in the 3550–3650 MHz Band

AGENCY: Federal Communications Commission.

ACTION: Proposed rule.

SUMMARY: In this further notice of proposed rulemaking, the Commission seeks comment on specific rule proposals for the establishment of a new Citizens Broadband Radio Service in the 3550–3650 MHz band (3.5 GHz Band).

DATES: Submit comments on or before July 14, 2014 and reply comments on or before August 1, 2014.

ADDRESSES: You may submit comments, identified by GN Docket No. 12–354, by any of the following methods:

- Federal Communications Commission's Web site: *http://fjallfoss.fcc.gov/ecfs2/.* Follow the instructions for submitting comments.
- Mail: All hand-delivered or messenger-delivered paper filings for the Commission's Secretary must be delivered to FCC Headquarters at 445 12th St. SW., Room TW–A325, Washington, DC 20554. The filing hours are 8:00 a.m. to 7:00 p.m. All hand deliveries must be held together with rubber bands or fasteners. Any envelopes and boxes must be disposed of before entering the building. Commercial overnight mail (other than U.S. Postal Service Express Mail and Priority Mail) must be sent to 9300 East Hampton Drive, Capitol Heights, MD 20743. U.S. Postal Service first-class, Express, and Priority mail must be addressed to 445 12th Street SW., Washington DC 20554.
- People with Disabilities: Contact the FCC to request reasonable accommodations (accessible format documents, sign language interpreters, CART, etc.) by email: *FCC504@fcc.gov* or phone: 202–418–0530 or TTY: 202–418–0432.

For detailed instructions for submitting comments and additional information on the rulemaking process, see the **SUPPLEMENTARY INFORMATION** section of this document.

FOR FURTHER INFORMATION CONTACT: Paul Powell, Attorney Advisor, Wireless Bureau—Mobility Division at (202) 418–1613 or *Paul.Powell@fcc.gov.*

SUPPLEMENTARY INFORMATION: This is a summary of the Commission's Further Notice of Proposed Rulemaking in GN

Docket No. 12–354, FCC 14–49, adopted and released April 23, 2014. The full text of this document is available for inspection and copying during normal business hours in the FCC Reference Center, 445 12th Street SW., Washington, DC 20554. The complete text may be purchased from the Commission's copy contractor, Best Copy and Printing, Inc., 445 12th Street SW., Room CY–B402, Washington, DC 20554, (202) 488–5300, facsimile (202) 488–5563, or via email at *fcc@bcpiweb.com.* The full text may also be downloaded at: *www.fcc.gov.* Alternative formats are available to persons with disabilities by sending an email to *fcc504@fcc.gov* or by calling the Consumer & Governmental Affairs Bureau at 202–418–0530 (voice), 202–418–0432 (tty).

Comment Filing Instructions

Pursuant to §§ 1.415 and 1.419 of the Commission's rules, 47 CFR 1.415 and 1.419, interested parties may file comments and reply comments on or before the dates indicated on the first page of this document. Comments may be filed using the Commission's Electronic Comment Filing System (ECFS). *See Electronic Filing of Documents in Rulemaking Proceedings,* 63 FR 24121, May 1, 1998.

▪ Electronic Filers: Comments may be filed electronically using the Internet by accessing the ECFS: *http://fjallfoss.fcc.gov/ecfs2/.*

▪ Paper Filers: Parties who choose to file by paper must file an original and one copy of each filing. If more than one docket or rulemaking number appears in the caption of this proceeding, filers must submit two additional copies for each additional docket or rulemaking number.

Filings can be sent by hand or messenger delivery, by commercial overnight courier, or by first-class or overnight U.S. Postal Service mail. All filings must be addressed to the Commission's Secretary, Office of the Secretary, Federal Communications Commission.

▪ All hand-delivered or messenger-delivered paper filings for the Commission's Secretary must be delivered to FCC Headquarters at 445 12th St. SW., Room TW–A325, Washington, DC 20554. The filing hours are 8:00 a.m. to 7:00 p.m. All hand deliveries must be held together with rubber bands or fasteners. Any envelopes and boxes must be disposed of before entering the building.

▪ Commercial overnight mail (other than U.S. Postal Service Express Mail and Priority Mail) must be sent to 9300 East Hampton Drive, Capitol Heights, MD 20743.

▪ U.S. Postal Service first-class, Express, and Priority mail must be addressed to 445 12th Street SW., Washington DC 20554.

▪ People with Disabilities: To request materials in accessible formats for people with disabilities (braille, large print, electronic files, audio format), send an email to *fcc504@fcc.gov* or call the Consumer & Governmental Affairs Bureau at 202–418–0530 (voice), 202–418–0432 (tty).

Ex Parte Rules

This proceeding shall continue to be treated as a ''permit-but-disclose'' proceeding in accordance with the Commission's *ex parte* rules. *See* 47 CFR 1.1200 et seq. Persons making *ex parte* presentations must file a copy of any written presentation or a memorandum summarizing any oral presentation within two business days after the presentation (unless a different deadline applicable to the Sunshine period applies). Persons making oral *ex parte* presentations are reminded that memoranda summarizing the presentation must (1) list all persons attending or otherwise participating in the meeting at which the *ex parte* presentation was made, and (2) summarize all data presented and arguments made during the presentation. If the presentation consisted in whole or in part of the presentation of data or arguments already reflected in the presenter's written comments, memoranda or other filings in the proceeding, the presenter may provide citations to such data or arguments in his or her prior comments, memoranda, or other filings (specifying the relevant page and/or paragraph numbers where such data or arguments can be found) in lieu of summarizing them in the memorandum. Documents shown or given to Commission staff during *ex parte* meetings are deemed to be written *ex parte* presentations and must be filed consistent with § 1.1206(b). *See* 47 CFR 1.1206(b). In proceedings governed by § 1.49(f), 47 CFR 1.49(f), or for which the Commission has made available a method of electronic filing, written *ex parte* presentations and memoranda summarizing oral *ex parte* presentations, and all attachments thereto, must be filed through the electronic comment filing system available for that proceeding, and must be filed in their native format (*e.g.,* .doc, .xml, .ppt, searchable .pdf). Participants in this proceeding should familiarize themselves with the Commission's *ex parte* rules.

We note that our *ex parte* rules provide for a conditional exception for all *ex parte* presentations made by NTIA or Department of Defense representatives. *See* 47 CFR 1.1204. This FNPRM raises significant technical issues implicating federal and non-federal spectrum allocations and users. Staff from NTIA, DoD, and the FCC have engaged in technical discussions in the development of this FNPRM, and we anticipate these discussions will continue after this FNPRM is released. These discussions will benefit from an open exchange of information between agencies, and may involve sensitive information regarding the strategic federal use of the 3.5 GHz Band. Recognizing the value of federal agency collaboration on the technical issues raised in this FNPRM, NTIA's shared jurisdiction over the 3.5 GHz Band, the importance of protecting federal users in the 3.5 GHz Band from interference, and the goal of enabling spectrum sharing to help address the ongoing spectrum capacity crunch, we find that this exemption serves the public interest.

Initial Paperwork Reduction Act Analysis

This FNPRM contains proposed new and modified information collection requirements. The Commission, as part of its continuing effort to reduce paperwork burdens, invites the general public and the Office of Management and Budget (OMB) to comment on the information collection requirements contained in this FNPRM, as required by the Paperwork Reduction Act of 1995, Public Law 104–13. In addition, pursuant to the Small Business Paperwork Relief Act of 2002, Public Law 107–198, we seek specific comment on how we might ''further reduce the information collection burden for small business concerns with fewer than 25 employees.''

Synopsis of the Further Public Notice of Proposed Rulemaking

I. Introduction

We are in the midst of a communications revolution that has connected us to each other as never before through an ever increasing number of wireless devices. As a result of the continuing proliferation of connected devices, demand for wireless broadband capacity is growing rapidly. New, more efficient wireless network architectures and innovative approaches to spectrum management are tools that can help maximize the utility of existing spectrum resources and make new spectrum bands available for broadband access. As we previously discussed, *See*

3.5 GHz NPRM, 78 FR 1188, January 8, 2013, our proposals for the 3550–3650 MHz band (3.5 GHz Band) focus on two components of the Commission's ongoing efforts to address wireless coverage and capacity issues: Small cells and spectrum sharing—both of which were addressed in a report issued by the President's Council of Advisors on Science and Technology (PCAST).

With this Further Notice of Proposed Rulemaking (FNPRM), we propose specific rules for a new Citizens Broadband Radio Service in the 3.5 GHz Band that would make the 3.5 GHz sharing regime originally described by PCAST a reality. The 3.5 GHz Band could be an ''innovation band,'' where we can explore new methods of spectrum sharing and promote a diverse array of network technologies, with a focus on relatively low-powered applications. If successful, the spectrum sharing model proposed for this band could ultimately be expanded to other spectrum bands and ''transform the availability of a precious national resource —spectrum—from scarcity to abundance.''

The proposed rules set forth herein build upon the record developed in response to a series of prior proposals and workshops over the past sixteen months. These detailed proposals will allow for more focused comment prior to establishing rules governing the proposed Citizens Broadband Radio Service in a new part 96 of the Commission's rules. Specifically, the proposed rules would implement an innovative and comprehensive framework to authorize a variety of small cell and other broadband uses of the 3.5 GHz Band on a shared basis with incumbent federal and non-federal users of the band, with oversight and enforcement through a Spectrum Access System (SAS). The proposed rules reflect our belief that the 3.5 GHz Band could be an ideal ''innovation band,'' well suited to exploring the next generation of shared spectrum technologies, to drive greater productivity and efficiency in spectrum use.

The creation of the Citizens Broadband Radio Service was originally proposed in a Notice of Proposed Rulemaking (3.5 GHz NPRM or NPRM) released in December 2012. After reviewing the record generated by the 3.5 GHz NPRM, we released a public notice to supplement the record with focused comment on specific concepts for the 3.5 GHz Band (Licensing PN). *See* Licensing PN, 78 FR 72851, December 4, 2013. The Licensing PN described a ''Revised Framework'' that elaborated on some of the alternative licensing and authorization concepts set forth in the NPRM. With this FNPRM we fulfill a commitment made in issuing the Licensing PN that we would seek comment on specific detailed rules before publishing a First Report and Order in this proceeding.

As set forth in more detail below, we propose to establish a three-tiered authorization framework—Incumbent Access, Priority Access, and General Authorized Access (GAA) tiers—based on the recommendations of PCAST and originally proposed in the NPRM. Under this framework, existing primary operations—including authorized federal users and grandfathered Fixed Satellite Service (FSS) earth stations—would compose the Incumbent Access tier and would receive protection from harmful interference from Citizens Broadband Radio Service users. At this time, we propose to establish geographic Exclusion Zones based on the models suggested in the National Telecommunications and Information Administration's (NTIA) Fast Track Report to protect federal Incumbent Access tier operations. We plan to work with NTIA in coming months to reassess these Exclusion Zones in light of new technologies envisioned in this FNPRM and new data from technical studies evaluating the coexistence of radars and wireless broadband services. If there are further developments that would enable a reduction in the size of the Exclusion Zones, we encourage participants to file in the record to ensure that there is sufficient opportunity for public comment prior to issuance of a Report and Order in this proceeding.

Interference management with respect to the three tiers of service, including adherence to designated Exclusion Zones, would be managed by a dynamic SAS, conceptually similar to, but more advanced than the databases used to manage Television White Spaces (TVWS) devices. Consistent with the Revised Framework, we propose to define each Priority Access License (PAL) as an authorization to use for one-year a 10 megahertz channel in a single census tract. PALs would be open to any prospective licensee that meets basic FCC qualifications and mutually exclusive applications for PALs would be subject to competitive bidding. PAL channels would be dynamically coordinated by the SAS and the exact spectral location of a given PAL authorization could shift from time to time as directed by the SAS during its license term. The GAA tier would be licensed-by-rule to permit open, flexible access to the band to the widest possible group of potential users. We propose to reserve at all times for GAA use, a minimum of 50 percent of the band that is not encumbered by Incumbent Access tier users in any given location.

We propose baseline technical standards for the operation of Citizens Broadband Radio Service Devices (CBSDs) and End User Devices in the 3.5 GHz Band as well as general rules for the operation of the SAS and approval of SAS Administrators. Many of these concepts were originally raised in the NPRM and Licensing PN. We also seek further comment on other important issues raised in this proceeding, including: (1) Protection criteria for Incumbent Users; (2) potential protection of FSS earth stations in the 3700–4200 MHz band (C-Band); (3) competitive bidding procedures for resolving mutually exclusive applications for PALs; and (4) the possible extension of the proposed rules to include the 3650–3700 MHz band. Some of these issues, particularly those dealing with protection criteria for Incumbent Access tier users, may require additional focused input from government and private industry stakeholders.

Our goal in this FNPRM is to generate focused comment on specific proposed rule text as a penultimate step before the establishment of a new rule part—part 96—authorizing fixed and mobile wireless use of the 3.5 GHz Band. Our goal is to adopt rules that promote efficient and widespread use of the 3.5 GHz Band for a variety of potential users. We emphasize that this is an iterative process and that, while some issues remain open, the proposed rules set forth herein provide a clear framework that would allow users to begin operations in the Citizens Broadband Radio Service in designated geographic areas.

II. Background

The Fast Track Report first identified the 3.5 GHz Band as potentially suitable for commercial broadband use. NTIA recommended that this band could be made available for commercial wireless broadband by 2015 based on the conditions outlined in the Fast Track Report. NTIA's recommendation included significant geographic restrictions to protect existing Department of Defense (DoD) radar and FSS operations and to protect new commercial systems from co-channel interference from high-powered military in-band shipborne and adjacent band DoD ground-based radar systems. The radar systems that operate in the 3.5 GHz Band overcome the inherent propagation limitations of this frequency range by employing high transmitter power levels and high-gain

antennas. These characteristics of the radar systems were a contributing factor to the size of the exclusion zones in the Fast Track evaluation.

In July 2012, PCAST recommended that the Federal Government identify 1,000 megahertz of federal spectrum for shared use to create ''the first shared use spectrum superhighways.'' PCAST recommends that shared spectrum be organized into three tiers. To ensure interference protection, all users would be required to register in a database modeled on the TVWS database. The first tier would consist of incumbent federal users. These users would be entitled to full protection for their operations within their deployed areas, consistent with the terms of their assignments. The second tier would consist of users that would receive short-term priority authorizations to operate within designated geographic areas. Secondary users would receive protection from interference from third tier users but would be required to avoid interference with and accept interference from Federal Primary users. Third tier users (GAA) would be entitled to use the spectrum on an opportunistic basis and would not be entitled to interference protection. PCAST recommends that the Commission, in conjunction with NTIA, work expeditiously to implement its recommendations in the 3.5 GHz Band.

The Commission's December 2012 NPRM proposed a three-tier, license-by-rule authorization framework, based on concepts described in the PCAST Report that are intended to facilitate rapid broadband deployment while protecting existing incumbent users of the 3.5 GHz Band. The NPRM solicited comment on all aspects of this proposal, including the appropriate licensing framework and the potential uses of each service tier. The Commission received extensive comment from a wide range of stakeholders in response. The NPRM also included a supplemental proposal to expand the proposed licensing and authorization model to an additional adjacent 50 megahertz of spectrum in the 3650–3700 MHz band, making up to 150 megahertz available for shared wireless broadband access.

As we noted in the NPRM, the technical characteristics of the 3.5 GHz Band and the existence of important incumbent operations in the band in many areas of the country contribute to make the band an ideal platform to explore innovative approaches to shared spectrum use and small cell technology. NTIA's Fast Track Report recommended, based on technical assumptions typical of traditional macrocell deployments of commercial wireless broadband technology, that new commercial uses of the band occur outside of large ''exclusion zones'' to protect Federal government operations. Given that the exclusion zones would cover approximately 60 percent of the U.S. population and because of limited signal propagation in the band, the band did not appear to be well-suited for macrocell deployment. However, as noted in the NPRM, these very disadvantages could be turned into advantages if the band were used to explore spectrum sharing and small cell innovation. This proposal was based on recommendations put forth by the FCC's Technology Advisory Council (TAC), which has advocated for the increased use of small cell devices in spectrum constrained areas and supported dedicating a spectrum band to small cell uses. The combination of small cells and spectrum sharing technologies could vastly increase the usability of the 3.5 GHz Band for wireless broadband and serve as a model for future coexistence among services in other spectrum bands.

In November 2013, in response to record comments received up to that point, we released the Licensing PN, which described a Revised Framework that elaborated upon some of the licensing concepts and alternatives set forth in the NPRM. The Revised Framework retains the three-tier model proposed in the NPRM but expands eligibility to apply for PALs, and explores innovative means of assigning authorizations within that tier. Like the NPRM's main proposal, the Revised Framework would leverage the unique capabilities of small cell and SAS technologies to enable sharing among users in the Priority Access and GAA tiers. Specifically, the Revised Framework contains the following core concepts:

- An SAS to dynamically manage frequency assignments and automatically enforce access to the Priority Access and GAA tiers;
- Expansive eligibility for Priority Access tier use;
- Granular, but administratively-streamlined licensing of the Priority Access tier;
- Exclusive spectrum rights for Priority Access subject to licensing by auction in the event of mutually exclusive applications;
- A defined ''floor'' of GAA spectrum availability, to ensure that GAA access is available nationwide (subject to Incumbent Access tier use);
- Additional GAA access to unused Priority Access bandwidth, as identified and managed by the SAS, to maximize dynamic use of the unutilized portion of the band and ensure productive use of the spectrum;
- Opportunities for Contained Access Users to obtain targeted priority spectrum use within specific facilities (such as buildings) that meet certain requirements to mitigate the potential for interference to and from Incumbent Users and other Citizens Broadband Radio Service users; and
- A set of baseline technical standards to prevent harmful interference and ensure productive use of the spectrum.

The Licensing PN generated a robust supplementary record, eliciting comments from a wide range of stakeholders. While most commenters support expanding Priority Access tier eligibility from ''critical access'' users to all qualified applicants, opinions were split on other specific aspects of the Revised Framework. Notably, commenters diverged greatly on the band plan, PAL specifications, authorization methodology, and technical specifications of CBSDs. These submissions are addressed in greater detail on an issue-by-issue basis in Section III.

In addition, we have convened two workshops to discuss technical issues related to this proceeding. The first workshop explored broad issues that emanated from the original NPRM. More recently, on January 14, 2014, the Bureau and OET hosted a workshop to further explore the technical requirements, operational parameters, and architecture of the proposed SAS (SAS Workshop). A diverse group of engineers representing industry stakeholders, trade associations, and academia submitted technical papers in advance of the workshop and participated in panels throughout the day. We address many of these submissions in greater detail below.

The purpose of this FNPRM is to solicit focused comment on specific proposed rules and other specifically identified open issues. To the extent that parties require additional background on any of the proposals we describe in this FNPRM, we encourage them to review prior releases in this docket, including the NPRM, the Licensing PN, and the recorded footage of the two workshops.

III. Discussion

With this FNPRM, we seek comment on proposed rules for the Citizens Broadband Radio Service. These proposed rules build upon the concepts and proposals set forth in the NPRM and the Licensing PN, in light of the record created in this proceeding. Notably, the proposed rules would:

• Implement the three-tier model proposed in the NPRM;
• Establish Exclusion Zones to ensure compatibility between incumbent federal operations and Citizens Broadband Radio Service users;
• Create an open eligibility authorization system for Priority Access and GAA operations;
• Establish granular, exclusive spectrum rights for the Priority Access tier, consistent with parameters discussed in the Licensing PN;
• Set a defined ''floor'' for GAA spectrum availability, to ensure that GAA access is available nationwide (subject to Incumbent Access tier use);
• Set guidelines to allow Contained Access Users to request up to 20 megahertz of reserved frequencies from the GAA pool for use within their facilities;
• Establish baseline technical rules for fixed or nomadic base stations operating in the 3.5 GHz Band;
• Set guidelines for the operation and certification of SASs in the band.

We seek detailed comment on these proposals, as well as viable alternative or supplemental rule provisions that could help to achieve our stated objectives. We encourage commenters to focus their submissions on the specific proposed rule text and structure. We further encourage commenters to identify the specific costs and benefits associated with any proposal. To the extent possible, commenters should provide specific data and information, such as actual or estimated dollar figures for each specific cost or benefit addressed, including a description of how the data or information was calculated or obtained, and any supporting documentation or other evidentiary support.

A. Proposed Regulatory Framework

Below we discuss the proposed Part 96 and its component subsections, as well as proposed modifications to our existing rules designed to accommodate the new proposed Citizens Broadband Radio Service. The discussion parallels the proposed structure of Part 96, as detailed in Appendix A.

1. Proposed Part 96 Rule Part

a. Subpart A—General Rules

(i) Scope (§ 96.1)

We propose to implement the three-tier authorization framework originally described in the NPRM and further discussed in the Licensing PN. This proposal is consistent with the framework for the 3.5 GHz Band originally described in the PCAST Report. Under this framework, existing primary operations—including authorized federal users and grandfathered FSS earth stations—would make up the Incumbent Access tier and would receive protection from harmful interference consistent with the proposed rules. The Citizens Broadband Radio Service would be divided into Priority Access and GAA tiers of service, each of which would be required to operate on a non-interference basis with the Incumbent Access tier. We also propose that any party that meets basic eligibility requirements under the Communications Act be eligible to hold a PAL or, when authorized, operate a CBSD on a GAA basis in the Citizens Broadband Radio Service.

The proposed three-tier framework enjoys significant support from a diverse group of commenters, including AT&T, Google, Public Knowledge, and the Open Technology Institute at the New America Foundation. Others, including CTIA—The Wireless Association (CTIA), NSN, and Qualcomm have argued that a two-tier framework that would prohibit or segregate GAA users would be a more efficient way to manage the 3.5 GHz Band.

Some commenters, including some who have also expressed support for the three-tiered model, argue that the 3.5 GHz Band should be divided between two and three-tiered authorization schemes, at least on a transitional basis. Under this concept, as originally described by Verizon Communications Inc. and Verizon Wireless Inc. (Verizon), a portion of the band would be set aside for a ''transitional framework'' sub-band which would be licensed on a more traditional, exclusive-use basis and would not include GAA users. The remainder of the band could be split between GAA-only use and the proposed three-tiered sharing framework. The ''transitional framework'' sub-band could then be phased out after the three-tier framework is proven to be workable in practice.

The specific Part 96 rules we propose today would apply the three-tier authorization model across the entire 3.5 GHz Band, based, at least in part, on concerns about the impact that Balkanization of this spectrum may have in terms of limiting the development of a robust and varied shared spectrum ecosystem in the band. We seek comment on the proposed section 96.1 and encourage commenters to consider the costs and benefits of any alternate proposals that they may put forward in light of the recommendations of PCAST and the Commission's goals for this band.

(ii) Definitions (§ 96.3)

Section 96.3 of the proposed rules sets forth definitions for various terms included in the proposed Part 96. We seek comment on these definitions and any additional terms that may need to be defined.

(iii) Eligibility (§ 96.5)

We propose that any entity, other than those precluded by section 310 of the Communications Act be eligible to operate a CBSD on a Priority Access or GAA basis. Issues related to qualifications for Priority Access, GAA, and Contained Access Users are explored in greater detail below.

(iv) Authorization Required (§ 96.7)

We propose that operators be authorized consistent with this part prior to operating CBSDs in the Citizens Broadband Radio Service. The proposed rules governing authorizations for Priority Access, GAA, and Contained Access Users are discussed in greater detail below. We seek comment on this proposed rule and on the proposed changes to Part 1 of the Commission's rules. We also seek comment on whether the licensing and authorization methods described herein would require the Commission to alter its existing rules governing filing, retention, and public access for licenses and applications in the Wireless Radio Services.

(v) Regulatory Status (§ 96.9)

We propose to allow Citizens Broadband Radio Service users to select whether to provide service on a common carrier or non-common carrier basis, regardless of whether they operate in the Priority Access tier, GAA tier, or both. Users that choose to offer services on a common carrier basis would be required to comply with all of the Commission's rules applicable to common carriers. This is consistent with our approach in other licensed services. We seek comment on this proposal. Specifically, should GAA users be permitted to provide common carrier services? Could the SAS effectively coordinate and enforce these individual service selections, subject to appropriate Commission oversight?

(vi) Frequencies (§ 96.11)

We propose to include the 3550–3650 MHz band in Part 96. These proposed rules could be expanded to include the 3650–3700 MHz band or other encumbered spectrum bands in the future. We discuss our supplementary

proposal to include the 3650–3700 MHz band in greater detail below. We seek comment on the proposed § 96.11.

(vii) Frequency Assignments (§ 96.13)

Consistent with the concepts set forth in the Licensing PN, we propose to adopt rules governing frequency assignments that would balance the needs of Priority Access Licensees and GAA users. To foster a robust GAA ecosystem, a meaningful amount of the 3.5 GHz Band must be reserved for GAA use in any given geographic area. To that end, we propose to reserve for GAA use a minimum of 50 percent of the 3.5 GHz Band in any given census tract—after accounting for any frequencies reserved for Incumbent Access tier use in the area—with the remainder to be assigned as PALs. We do not propose to assign GAA users and Priority Access Licensees to fixed spectral locations (*e.g.,* GAA from 3550–3600 MHz and Priority Access from 3600–3650 MHz). Rather, under our proposal, the SAS would dynamically assign PAL channels and GAA bandwidth in real time to promote efficient spectrum use.

Under this proposal, PALs would be assigned in 10 megahertz channels, consistent with the processes described in section III(A)(1)(c) below, but we do not propose to establish a fixed channel size for GAA users. Rather, GAA users would be permitted to operate on a range of frequencies within the GAA pool, as determined by the SAS. In addition, in areas in which bandwidth has not yet been assigned to PALs or where assigned bandwidth is not in actual use by Priority Access Licensees, such bandwidth would be made available for additional GAA operations on an opportunistic basis. The SAS would coordinate Priority Access and GAA operations consistent with its responsibilities under the proposed rules.

Proportional Assignment of GAA and Priority Access Frequencies. In response to the Licensing PN, commenters supported a wide range of potential frequency assignment models for the 3.5 GHz Band, ranging from rejection of a GAA Tier to fully dynamic assignment of GAA and Priority Access rights based on demand and network needs. Of those commenters that supported the proposed three-tier model, AT&T, T-Mobile, and Google argued that a higher, fixed quantity of spectrum should be assigned for Priority Access use. Microsoft argued that a minimum of 50 megahertz of spectrum should be retained for GAA use while Public Knowledge argued that no less than 50 percent of available spectrum should be reserved for GAA. WISPA argued that, in rural areas, 70 megahertz of the band should be available for GAA use while in non-rural areas only 50 megahertz should be reserved.

We seek comment on whether the proposed rule appropriately balances public interest considerations raised by commenters on this matter. Does the proposed 50 percent floor for GAA bandwidth provide sufficient spectrum to foster a robust user ecosystem while ensuring that enough spectrum is made available for multiple Priority Access Licensees? We seek comment on the proposed rule, including any costs and benefits of the proposed approach. We also seek comment on alternative approaches to the apportioning of available spectrum between the PAL and GAA tiers.

Dynamic Frequency Assignment. Commenters differed as to whether frequency assignments should be fixed or dynamically assigned by the SAS. Notably, Google and WISPA supported dynamic assignment of Priority Access and GAA frequencies and argued that the SAS would be able to efficiently and dynamically assign frequencies to appropriate parties. Commenters including AT&T, T-Mobile, CTIA, and Ericsson argued for designated, fixed channel assignments, claiming that dynamic frequency assignments would interfere with network planning and channel aggregation.

Under our proposal, in place of fixed channel assignments, the SAS would dynamically assign bandwidth within given geographic areas to Priority Access Licensees and GAA users in accordance with the procedures set forth in the proposed rules. The SAS would ensure that Priority Access Licensees have access to allotted 10 megahertz channels and that GAA users are provided access to at least 50 percent of the band. However, the exact spectral location of any given authorization, whether Priority Access or GAA, would not be fixed. For example, a licensee might have Priority Access rights for a single PAL, but the specific channel location assigned to that user would be managed by the SAS and could be reassigned from time to time (*e.g.,* from 3550–3560 MHz to 3630–3640 MHz). Individual GAA users would be assigned available bandwidth of a size and spectral location determined by the SAS (*e.g.,* from 3550–3556 MHz or 3662–3673 MHz). The SAS would assign and maintain appropriate frequency assignments and ensure that lower tier users do not interfere with higher tier users. To the extent that some level of regional or national consistency of assignment facilitates the provision of service, SAS providers would be free to agree upon a common assignment convention. However, such a convention would not be specified in the rules, in order to allow the greatest degree of operational flexibility.

We seek comment on the proposed rule, including the capabilities that the SAS would have to incorporate to manage operations in the band consistent with this proposal. Alternately, should we adopt a more traditional model with static frequency assignments for GAA users and Priority Access Licensees? What advantages and disadvantages would a fixed channel assignment model provide as compared to the dynamic system set forth in the proposed rules?

We also seek comment on our proposal to allow the SAS to assign a flexible amount of bandwidth to individual GAA users. Should GAA users instead be assigned a consistent amount of bandwidth (*e.g.,* 10 megahertz) like Priority Access Licensees? What would be the costs and benefits of such an approach?

GAA Access to Unused Priority Access Channels. The Revised Framework discussed allowing GAA users to access unused Priority Access channels on an opportunistic basis. AT&T and T-Mobile supported the concept of allowing GAA users to make use of unused Priority Access tier channels so long as use was limited to unassigned and undeployed channels. Under their proposal, a channel would be unavailable for GAA once it is assigned to a Priority Access Licensee. Public Knowledge, The New America Institute, Federated Wireless, and Google as well as a broad coalition of broadband service providers, manufacturers, trade associations, and technology companies (Coalition) argued for a more flexible model that would allow GAA use over Priority Access channels that are not in actual use. The rule we propose here would allow GAA use on unused PAL channels to promote efficient and consistent use of spectrum.

We seek comment on the proposed rule, including any costs and benefits of the proposed approach. How should ''use'' be practically and consistently determined in this context? How should the determination be made in the context of our dynamic frequency assignment proposal? If an assigned but previously unused PAL channel is later determined to be ''in use,'' how long should a GAA user be given to vacate the Priority Access channel? What should be the triggering event that reserves assignment of a channel for PAL use? Should the event be based on action by a Priority Access Licensee

(*e.g.,* initiating service in a portion of the PAL) or by the SAS (*e.g.,* assigning a channel to the PAL in response to a request from a Priority Access licensee)?

b. Subpart B—Incumbent Protections

(i) Protection of Federal Incumbents (§ 96.15)

Consistent with the three-tier construct, we propose in Section 96.15 to require that CBSDs may not cause harmful interference to and must accept interference from authorized federal users in the 3.5 GHz Band. As an initial matter, we also propose at this time that CBSDs comply with the geographic Exclusion Zones based on the parameters set forth in the Fast Track Report to ensure compatibility with federal operations, and that the SAS ensure that CBSDs do not operate within Exclusion Zones. We discuss issues related to these requirements in more detail, including the size of Exclusion Zones and our intention to revisit the appropriate incumbent protection criteria, in section III(B)(1) below. We seek comment on these proposed rules.

(ii) Protection of Existing Fixed Satellite Service Earth Stations in the 3550–3650 MHz Band (§ 96.17)

We also propose to protect existing FSS earth stations in the 3.5 GHz Band by requiring that CBSDs not cause harmful interference to these sites. We discuss broader issues related to these requirements in more detail in Section III(B)(3)(a) below and seek comment on the issue of protection for ''out-of-band'' FSS earth stations in section III(B)(3)(b). We seek comment on these proposed rules.

(iii) Operation Near Canadian and Mexican Borders (§ 96.19)

Our proposed rules note that Citizens Broadband Radio Service operations along the Canadian and Mexican borders would be subject to international agreements with Mexico and Canada. The SAS would be required to enforce these requirements. We seek comment on these proposed rules.

c. Subpart C—Priority Access

We propose not to limit eligibility for the Priority Access tier, to assign rights based upon targeted PAL parameters, resolve mutually exclusive license applications via competitive bidding, and to require access coordination through an SAS. These proposals are generally consistent with the Revised Framework described in the Licensing PN.

(i) Authorization (§ 96.21)

Under our proposed rules, any entity eligible to hold an FCC license would be eligible to apply for, and hold, a PAL. Commenters generally support expanding eligibility to the Priority Access tier to a broader class of users than we proposed in the NPRM. Expanded access to the Priority Access tier would promote more intensive use of the 3.5 GHz Band and would promote investment in new small cell technologies. We propose to require all applicants for PALs to demonstrate their qualification to hold an authorization and demonstrate how a grant of authorization would serve the public interest. Qualifications would include those under section 310 of the Act regarding foreign ownership. The Commission has broad authority to prescribe ''citizenship, character, and financial, technical, and other qualifications'' for its licensees. We seek comment on how to apply this authority with respect to the 3.5 GHz Band, and whether to adopt the same policies in this respect that the Commission has established for other services. We also propose that certain of the processes and requirements may be reasonably automated by SAS Administrators, in accordance with the Commission's rules. We seek comment on these proposed rules, including on any limitations posed by our Title III obligations on the scope of authority that may be delegated to such SAS Administrators.

(ii) Priority Access Licenses (§ 96.23)

Our proposed rules stipulate that Priority Access Licensees would receive interference protection from GAA users but would operate on a non-interfering basis with respect to Incumbent Users. Conceptually, the proposed PALs would be ''building blocks'' that an eligible licensee could aggregate over frequency, time, and geography to meet diverse spectrum needs. The use of PALs—and interactions between and among tiers—would be managed by the SAS. This licensing and access model is consistent with the recommendations of PCAST and would effectively serve the public interest. We seek comment on these proposed rules as described in more detail below.

Geography. We propose to authorize PALs at the census tract level and to permit geographic aggregation across license areas. As explained in the Licensing PN, census tracts offer a variety of benefits, including geographic sizes varying by population density, nesting into other political subdivisions including city lines, and aligning with other natural features that track population density. Under our proposal, PAL applicants could target specific geographic areas in which they need additional coverage and avoid applying for areas that they do not intend to serve. Our proposal reflects the unique technical characteristics of small cells to promote a high degree of spectral and spatial reuse while facilitating flexible, targeted deployment of CBSDs.

We received a diverse record in response to our proposal to use census tracts as a licensing area. Some commenters agreed with our proposal. Others argued that census tracts were inappropriate geographic license areas because the borders of census tracts frequently divide streets and their relatively small size would make co-channel coordination between Priority Access Licensees more difficult. Other commenters suggest that even smaller geographic areas, such as census block groups would allow for granular and demand-focused assignments. Others proposed larger, more traditional license areas such as counties, EAs, or CMAs. Google suggests license boundaries be based on proposed network parameters and actual contours, as determined and enforced by the SAS.

Our census tract proposal occupies a middle ground among these diverse recommendations, and is designed as an equitable means of achieving the Commission's public interest goals. Census tracts are sufficiently granular to promote intensive use of the band and are large enough, either on their own or in aggregate, to support a variety of use cases, including small cell base stations and backhaul. We seek comment on the proposed rule including any potential costs or benefits. Would adopting alternative geographic license sizes further the public interest given the Commission's goals and contemplated use cases for the band? We also seek comment on whether PALs could be deployed on an even more focused basis, employing a fine grained grid of ''pixels'' (*i.e.,* small, regular geographic regions that can be combined to approximate, with high resolution, the operational and protection contours of various system deployments) to promote more targeted and customizable network deployment. If the Commission adopts census tracts, or something smaller, as the appropriate geographic license area, should package bidding or another mechanism that would allow applicants to bid on larger geographic areas be adopted? To the extent that commenters believe that the use of census tracts would foreclose a particular use case for the band, we encourage them to provide

detailed technical analyses to support their claims.

Channels. As described in the Revised Framework and section III (A)(1)(a)(vii) above, we propose to authorize PALs to operate over 10 megahertz unpaired channels. While a few commenters argued for larger or smaller channels, the record generally supports our proposal to utilize 10 megahertz channels for PALs with the ability to aggregate multiple channels. Ten megahertz channels provide a flexible, scalable, practically deployable bandwidth for high data rate technologies that would permit multiple Priority Access Licensees to operate effectively in a given geographic area. We seek comment on the proposed rule.

In addition, consistent with the Revised Framework, we propose that once the Commission has assigned PAL rights to a user, the specific channels would be dynamically assigned to the PALs by the SAS. As discussed previously, some commenters argue for fixed channel assignments. Others, like Google and WISPA support the dynamic assignment model outlined in the Revised Framework. We should maximize flexibility in the band to allow the SAS to use channel assignments as a tool in maximizing efficiency and minimizing interference scenarios. However, we propose that the SAS be permitted to assign specific frequencies to Priority Access Licensees upon their request, when available and on a dynamic basis. To the extent a licensee has PALs in adjacent census tracts, we propose that the SAS should endeavor to assign contiguous frequencies across geographic boundaries. In addition, consistent with the dynamic nature of the proposed channel assignments, we encourage SAS Administrators to make reasonable efforts to assign adjacent frequencies to licensees with access rights to multiple channels in a single census tract. Dynamically assigning spectrum based upon the demand within a geographic area at a given time would promote efficient use of the band across wider geographic areas without compromising flexibility. We seek comment on this proposal. What effect would such assignment have on spectrum efficiency as opposed to the use of channel bonding techniques across non-contiguous spectrum? Would such a rule simplify or complicate the SAS's ability to manage the spectrum within any given census tract? What effect would such a rule have on the ability to predict and take measures to prevent harmful interference among users within the same census tract and users in nearby census tracts?

Term. We propose to limit license terms to one-year with no renewal, but allow entities to aggregate up to five consecutive years of licenses, through competitive bidding. PALs would automatically terminate at the end of each year. As explained in the Licensing PN, we believe that this approach would promote flexibility, simplify administration, and promote fungibility and liquidity in the secondary market. Allowing applications for multiple years of PALs would provide Priority Access Licensees with the certainty they may need to make capital investments in any PAL.

The record related to these licensing concepts was also mixed. Some commenters agreed with our proposal of one-year terms with the option to aggregate multiple years. Others argued for license terms shorter than one year while Microsoft agreed with the one-year proposal but argued for a prohibition on term aggregation. On the other hand, several commenters including Ericsson, NSN, and Qualcomm supported a more traditional licensing model with longer (*e.g.* 10-year) license terms.

Under this proposal, licensees would be able to hold up to five-years of PALs in a given geographic area at any given time. Licensees holding less than five-years of PALs in a geographic area may apply for additional PALs in the same geographic area, up to a total (including their existing PALs) of five-years. For example, a licensee awarded five-years of PALs through the annual application window in one year would be allowed to apply for a one year PAL through the annual application window in the subsequent year.

We note that in response to the Licensing PN, several commenters argued for a shorter temporal aggregation limit than we propose here. For example, WISPA suggests a four-year aggregation cap, Public Knowledge and the New America Foundation suggest a three-year cap, Motorola Solutions suggests only two years, and Microsoft suggests we not permit term aggregation (effectively a one-year availability in the licensing window). AT&T, by contrast, suggests that licensees be permitted to retain their authorizations indefinitely for areas in which they have deployed equipment and provided service within one year. By combining short-term licenses with a multi-year application window, our proposal for one-year licenses with term aggregation balances the competing public interest concerns expressed in the record. We seek comment on the proposed one-year, non-renewable license terms and aggregation limit, including any costs and benefits.

(iii) Application Window (§ 96.25)

We propose to accept applications for PALs annually and to make up to five consecutive years of PALs available in any given application window. We seek comment on the proposed rule including any potential costs or benefits.

(iv) Assignment of Licenses (§ 96.27)

We propose to adopt a geographic area license scheme for the Priority Access tier, which permits the filing and acceptance of mutually exclusive applications. Section 309(j) of the Communications Act requires that the Commission assign initial licenses through the use of competitive bidding when mutually exclusive applications for such licenses are accepted for filing, except in the case of certain specific statutory exemptions. Although the NPRM asked whether a licensing scheme for PALs should include a ''mission critical'' eligibility criterion that might involve such exemptions, under our current eligibility proposal such exemptions would not appear applicable here. Consistent with the Commission's policy that competitive bidding places licenses in the hands of those that value the spectrum most highly, we believe that it would be in the public interest to adopt a licensing scheme for PALs which allows the filing of mutually exclusive applications that, if accepted, would be resolved through competitive bidding. Accordingly, in section III(A)(2)(b) below, we seek comment on a number of proposals regarding competitive bidding rules that would apply to resolve any mutually exclusive applications accepted for PALs in the Citizens Broadband Radio Service.

(v) Aggregation of Priority Access Licenses (§ 96.29)

OTI, New America Foundation, and Public Knowledge argue that when mutual exclusivity exists no licensee should hold more than 20 megahertz of spectrum in a given license area. They argue that the limitation would allow future entrants and new competitors to enter the market. We propose to allow licensees to hold up to three PALs in one census tract at one time (*i.e.,* 30 megahertz in one census tract at any time). Given the unique circumstances of this band and the proposed rules, it would be difficult to apply the Commission's traditional competitive review process with respect to proposed transfers of licenses in the band. In this specific instance, a clear aggregation

limit, applicable to all PAL licensees in the band, could promote competitive access to the band while avoiding the need for case-by-case review of license transfers. This approach should facilitate a liquid ''spot market'' in PALs, as described further in section III(A)(2)(c), below. We seek comment on the proposed rule. Should we set a higher or lower allowance? Should aggregation allowances only apply when mutual exclusivity exists? Is an aggregation limit necessary when interested parties also have access to GAA spectrum, along with other bands that can be used for Wi-Fi and other similar services? Should aggregation limits change if the band is partially encumbered by Incumbent Users? What are the costs and benefits of higher or lower allowances? Are there other methods to promote competition, incentivize investment and innovation, and ensure spectrum availability for diverse uses?

d. Subpart D—General Authorized Access

(i) Authorization and General Authorized Access Use (§ 96.31 and § 96.33)

As explained above, we propose to reserve a floor of at least 50 percent of available bandwidth in the 3.5 GHz Band in each census tract for GAA use, with additional frequencies to be made available on an opportunistic basis when not in use by Priority Access Licensees. As described in the NPRM and Licensing PN, GAA devices would be licensed-by-rule as under Section 307 of the Communications Act to promote rapid deployment by a wide range of users at low cost and with minimal barriers to entry. GAA users would be required to use only certified, Commission-approved CBSDs and register with the SAS. Consistent with the proposed rules governing CBSDs, devices operating on a GAA basis would be required to provide the SAS with all information required by the rules—including operator identification, device identification, and geo-location information—upon initial registration and as required by the SAS. GAA users would also be required to comply with the instructions of the SAS and avoid causing harmful interference to Priority Access Licensees and Incumbent Access tier users. Similar to unlicensed operations, GAA users would have no expectation of interference protection from other Citizens Broadband Radio Service users. Are there other licensing paradigms that the Commission should consider? If so, commenters are requested to provide a detailed analysis of the pros and cons of the approach.

As discussed previously, commenters took a variety of positions with regard to the portion of the band that should be used for GAA as well as our proposals to allow dynamic and opportunistic use of unused Priority Access channels. Some commenters also objected to our proposal to authorize the GAA tier on a license-by-rule basis. These positions are discussed in greater detail in sections III(A)(1)(a)(vii) and III(A)(2)(a). Our proposals would ensure widespread availability of GAA frequencies for the broadest possible class of users and applications. We seek comment on the proposed rules including potential costs and benefits.

(ii) Contained Access Facilities (§ 96.35)

As we noted in the NPRM and Licensing PN, a wide variety of critical services in the United States have current and future spectrum needs and there is currently insufficient spectrum to allocate exclusive bandwidth to all such services. While we believe that broad eligibility for use of the 3.5 GHz Band will produce significant public interest benefits, we continue to believe that ''the high spatial reuse characteristics of low-power 3.5 GHz transmissions, combined with access management facilitated by the SAS, should allow the 3.5 GHz Band to be utilized on a shared, licensed basis by a variety of critical users to provide high quality services to localized facilities.'' To that end, the Licensing PN sought comment on whether it would be in the public interest to allow critical users to receive interference protections, akin to Priority Access users, within a limited portion (*e.g.,* 20 megahertz) of the GAA pool inside the confines of their facilities.

Commenters responding the Licensing PN diverged as to how the Commission should treat critical facilities. Commenters including T-Mobile and Spectrum Bridge support allowing critical access users to reserve spectrum on a highly localized basis. Motorola Solutions argues that critical facilities should be assigned 20 to 30 megahertz of the 3.5 GHz Band and be permitted to utilize that spectrum for indoor or outdoor applications, while UTC asserts that the entire Priority Access Tier should be reserved for critical access facilities. Google argues that preferential treatment for critical facilities should be limited to ''available spectrum'' and that such users should not be able to evict users that have already deployed network facilities. In addition, PCIA argues that the Commission should provide for the deployment of both critical and non-critical localized indoor networks.

We propose to allow Contained Access Users, such as hospitals, public safety organizations, and local governments to request up to 20 megahertz of reserved frequencies from the GAA pool for indoor use within their facilities in furtherance of the public interest. These frequencies may be used only for private internal radio services and may not be made available to the general public. Other GAA users would not be permitted to utilize the reserved frequencies within designated Contained Access Facilities (CAFs). Except for the ability to prohibit third-party use in CAFs, Contained Access Users availing themselves of the reserved channels would still operate on a GAA basis and would have no special rights with respect to interference from Incumbent Users and other Citizens Broadband Radio Service users. We also propose that Contained Access Users must undertake reasonable efforts to safeguard against harmful interference from GAA transmissions originating outside the CAF. The ''reasonable efforts'' requirement would therefore ensure that Contained Access Users take advantage of RF isolation intrinsic to the CAF, along with any other potential interference ''self-help'' measures, to protect the RF environment within the CAF. Potential Contained Access Users would be required to receive approval from the Commission to be eligible to utilize reserved frequencies. The public interest would be served by giving designated Contained Access Users the ability to utilize reserved frequencies indoors, within CAFs in this fashion. Moreover, the limited geographic and spectral impact of this proposal will allow for the effective coexistence of Contained Access Users, Incumbent Users, and other Citizens Broadband Radio Service operators.

We seek comment on the proposed rule including any costs or benefits. Specifically, what types of entities should be considered qualified Contained Access Users? Does this proposal adequately address the spectrum needs of Contained Access Users? Would this proposal effectively address a demonstrated spectrum need for certain users that would not otherwise be addressed by the proposals in this FNPRM? Should this proposed framework be limited to Contained Access Users or expanded to include other types of facilities, including outdoor facilities? Would the SAS be able to effectively manage spectrum use by a large number of facilities? How would the SAS limit the operation of other GAA users within CAF premises?

Would this plan unacceptably encumber GAA spectrum? We ask that commenters provide detailed technical and/or economic analysis to support their arguments.

e. Subpart E—Technical Rules

(i) Citizens Broadband Radio Service Devices General Requirements (§ 96.36)

To enable the SAS to authorize and effectively coordinate the use of shared spectrum in the 3.5 GHz Band, CBSDs must transmit certain operational and identification information to the SAS. In the NPRM, Licensing PN, and SAS Papers PN we sought comment on the types of information that CBSDs should be required to transmit. Commenters took a wide range of positions with regard to information transmission requirements for CBSDs. Elements of these proposals have been incorporated into proposed rule 96.36. Specifically, we propose that CBSDs must provide the SAS with the following information: (1) Geographic location (within ±50 meters horizontal and ±3 meters vertical); (2) antenna height above ground level (meters); (3) requested authorization status (Priority Access or General Authorized Access); (4) unique FCC identification number; (5) user contact information; and (6) unique serial number. This information must be communicated when the CBSD initially registers at the SAS and at regular intervals thereafter. We also propose that CBSDs must follow directions and updates sent by SAS in a timely manner. For managed networks, while it is likely that information exchanges between CBSDs and the SAS would be aggregated through a proxy such as a network access manager, the proposed requirements would still be applicable to all CBSDs operating in the band.

Geo-location and Reporting Capability. For the SAS to predict and evaluate potential interference and spectrum availability accurately it must have accurate location information for all CBSDs. We propose that all CBSDs must accurately report the location of each of their antennas to within ±50 meters (horizontal) and ±3 meters (vertical). The proposed horizontal geo-location requirement is consistent with a similar requirement in the TVWS rules. We also propose that CBSDs report their location to the SAS within 60 seconds of a change in location exceeding the accuracy requirement. We seek comment on these proposals, including potential costs and benefits. Is this degree of accuracy feasible with current technology? Should we require greater accuracy? What effect do the accuracy requirements have on actual spectrum efficiency and the SASs ability to manage interference potential among different users? Would the proposed geo-location requirement place undue burden on equipment manufacturers or SAS operators? Is such a requirement reasonable to control the interference environment among users? Is there a different timeframe for reporting that should be used?

Interoperability. To facilitate our proposed dynamic approach to frequency assignment, we propose to require CBSDs to be interoperable across all frequencies from 3550–3700 MHz. This would ensure that all CBSDS and End User Devices certified to operate in the band would be capable of sending and receiving information regardless of the frequencies assigned by the SAS. It also anticipates the possible inclusion of the 3650–3700 MHz band. Several commenters also supported band-wide device interoperability. We seek comment on this proposal including any potential costs and benefits. What effects would such a requirement have on equipment cost and design? What are the implications of equipment that may only work over a portion of the band and may not be able to tune to channels as assigned by the SAS? To what extent would an interoperability requirement promote consumer choice, given the characteristics of this service? To what extent should we seek to align the proposed interoperability requirement with existing international harmonization efforts for the 3.5 GHz Band (*e.g.,* 3GPP Bands 42 and 43)? Similarly, how are current coexistence efforts among products conforming to multiple industry standards (*e.g.,* 3GPP, IEEE 802.11 series) affected by the proposed interoperability requirement?

Registration with SAS. As set forth in greater detail below, we also propose that CBSDs be permitted to operate only if authorized by the SAS and if they follow frequency assignments and power limitations set by SAS. We propose that CBSDs must move their transmission to another channel or stop operation in the band as directed by SAS within a reasonable time. We seek comment on the appropriate time for CBSDs to respond to instructions from the SAS. Is sixty seconds a reasonable response timeframe or could a shorter response period be imposed? How does the timeframe affect the overall spectrum efficiency within the band? What effect would this timeframe have on the ability of the SAS to manage potential interference?

Interference Reporting. Some commenters suggested that, to enable the SAS to tune or update its predictive models and also address real time interference issues, CBSDs should be required to provide the SAS with signal level measurements in their band or other adjacent frequency channels as requested by SAS. Many technologies already support this capability to allow radio resource management within a network. This capability could be a valuable tool for managing interference and promoting productive coexistence between multiple operators in the 3.5 GHz Band. We propose to require CBSDs to measure and report on their local signal level environment as set forth in the proposed rules. We seek comment on this proposal. What effect would the incorporation of such capability have on the cost of equipment? How should such a requirement be structured? Over what bandwidth or over how many channels should such measurements be reported? Does the Commission need to adopt measurement guidelines or procedures specifying how such measurements should be taken to ensure consistency in reporting among users?

Security. During the SAS Workshop many commenters also emphasized the importance of end-to-end security for communications among CBSDs, End User Devices, and the SAS. We are mindful of the need to provide robust security for Federal information, personally identifiable information, and sensitive business information that may be transmitted between these devices and the SAS. To that end, we propose a security requirement for all communications between authorized SASs and CBSDs. We also propose to adopt comprehensive procedures to test and certify CBSDs and associated end user devices for operation in this band and to require the SAS to disconnect any device whose proper operation has been compromised. We seek comment on these proposed security measures. We ask commenters to suggest appropriate security protocols and discuss how these protocols would effectively safeguard sensitive information transmitted among the SAS, CBSDs, and End User Devices. If not, what additional measures should we adopt? Are there other enforcement mechanisms that can be put in place to ensure proper security of devices?

(ii) End User Devices General Requirements (§ 96.37)

We propose that mobile, portable, or fixed End User Devices may operate only if they can positively receive and decode an authorization signal transmitted by a CBSD, including the frequencies and power limits for their operation. This requirement would effectively prevent End User Devices

from unauthorized operation in the 3.5 GHz Band and ensure that such devices operate only according to the instructions transmitted from the SAS to the CBSD. We seek comment on this proposed rule.

General Radio Requirements (§ 96.38)

Digital Modulation. We propose that systems operating in the Citizens Broadband Radio Service use digital modulation techniques. We seek comment on this proposed rule.

Conducted and Emitted Power Limits. To prevent harmful interference among users of the 3.5 GHz Band, we propose to establish appropriate and flexible power limits for CBSDs and End User Devices when operating in this band. In the Licensing PN, we sought comment on limiting CBSD emitted power to 24 dBm. We also sought comment on a 6 dBi antenna gain for installations requiring an external antenna. With negligible cable and insertion loss, this makes the maximum effective isotropically radiated power (EIRP) 1W or 30 dBm. We noted that these are consistent with the values commonly assumed in various studies for small cell base stations. We also indicated that the maximum operational EIRP of individual base stations might be reduced by the SAS to prevent interference and promote efficient network operation. In addition, we assume that End User Devices would have configurable maximum power levels below typical 24 dBm values and support for some form of power control.

Commenters diverged greatly with regard to the maximum allowable power for devices operating in the band, with many supporting variable power limits for different use cases. For instance, CommScope supported a 24 dBm maximum transmit power for base stations with low gain antennas. T-Mobile supported a maximum transmit power of 24 dBm for GAA users and 37 dBm for Priority Access devices. Verizon advocated a maximum transmit power of 30 dBm for outdoor Priority Access base stations, while noting that 24 dBm might be appropriate for GAA indoor uses. Similarly, Motorola Solutions, BliNQ, and Qualcomm supported maximum transmit power of 30 dBm for at least some use cases. WISPA encouraged the Commission to allow higher power operations in rural areas of the country.

Commenters also supported a wide range of allowable antenna gains for base stations—from 6 dBi through 29 dBi—and maximum allowable power levels for different transmitters within that range. For the combination of transmit power and antenna gain, commenters proposed a range of EIRP from low 30 dBm to high 47 dBm for different use cases. Motorola Solutions, Qualcomm, and CommScope (for lower than 12 dBi antenna gain) suggested a maximum EIRP of 30 dBm. Some, including Google (36 dBm), CommScope (37 dBm for equal or higher than 12 dBi antenna gain), and Verizon (47 dBm) argued for higher maximum EIRP figures.

We also received transmit power recommendations from parties who would like to utilize the 3.5 GHz Band for point-to-point and backhaul service. BLiNQ argued that a maximum EIRP allowance of 43 dBm would help enable non-line-of-sight (NLOS) backhaul applications as well as other important services, such as rural point-to-point communications. CommScope also recommended 54 dBm EIRP for point-to-point backhaul and Verizon suggested that 53 dBm EIRP would be appropriate for outdoor point-to-point service.

It is important to establish flexible rules that would allow for a wide variety of innovative services to be deployed in the 3.5 GHz Band and we are encouraged that many commenters share this view. Ensuring that the band is available for multiple use cases should encourage rapid network deployment, promote the development of a robust device ecosystem, and help to ensure the long-term viability of the band. Therefore, we propose to adopt different transmit power levels to accommodate a range of Citizens Broadband Radio Service use cases. Except for fixed point-to-point radio systems addressed below, we propose to adopt a 24 dBm (per 10 megahertz) peak transmit power for CBSDs that are not operating in rural areas. For devices with a 6 dBi antenna gain, we propose a maximum aggregate EIRP of 30 dBm for CBSDs located in non-rural areas. The power spectral density for such transmit power would be 14 dBm/MHz. We also propose to adopt 30 dBm (per 10 megahertz) peak transmit power for CBSDs that operate in rural areas. With 17 dBi antenna gain, we propose a maximum aggregate EIRP of 47 dBm for CBSDs located in rural environments. The power spectral density for such transmit power would be 20 dBm/MHz. These proposed transmit power limits are generally consistent with recommendations in the record. These proposed maximum transmit power levels would help promote productive use of the band.

For fixed point-to-point radio systems, we propose a 30 dBm (per 10 megahertz) peak transmit power limit for CBSDs. With a 23 dBi antenna gain, we propose a maximum aggregate EIRP of 53 dBm for CBSDs. We propose that the maximum allowable peak transmit power in this paragraph be reduced by 1 dB for every 1 dB that the directional gain of the antenna exceeds 23 dBi. The power spectral density for such transmit power would be 20 dBm/MHz.

We also propose that maximum EIRP for End User Devices not exceed 23 dBm in 10 megahertz bandwidth. We also propose that CBSDs and End User Devices limit their operating power to the minimum necessary for successful operation.

We note that NTIA did not consider these proposed use cases or technical criteria in calculating the Fast Track Exclusion Zones. What effects would these additional use cases have on the size of the Exclusion Zones?

We seek comment on these proposed rules. Are the proposals in this section appropriate for the variety of use cases possible in the 3.5 GHz Band? Would these proposals further the public interest by promoting efficient and innovative use of spectrum resources? Should the proposed definition of ''rural environments'' be altered due to the use of small cells and in light of the fact that these systems are proposed to be deployed in areas smaller than counties? In light of the flexible approach to EIRP limits proposed herein, should we consider allowing higher power operations in the 3.5 GHz Band? We encourage commenters to support their positions with detailed technical and cost benefit analyses taking into account the various interference scenarios that may exist in this band among different CBSDs and among CBSDs and Incumbent Users.

Received Signal Strength Limits. To perform proper frequency assignments and interference management, it is important for the SAS to have a baseline threshold for the maximum signal level from CBSDs at the border of their service area. Therefore, Citizens Broadband Radio Service users should ensure that the aggregate signal level from their CBSDs as well as transmissions from their associated End User Devices at the edge of their authorized service areas remain at levels that would not harm other CBSDs in the same or higher tiers. For small cell networks, the industry standards and studies have shown 20 dB and 55 dB of interference rise over noise to be acceptable for picocells and femtocells respectively. Based on these industry standards, and taking into account reasonable distance between authorized use operations, we propose a signal level threshold of—80 dBm measured by a 0 dBi isotropic antenna in a 10

megahertz bandwidth anywhere along PAL service area boundaries between different Citizens Broadband Radio Service users. We also propose to allow neighboring users to coordinate a higher signal level threshold. We seek comment on this proposed rule. How should this signal level be determined? Over what bandwidth should the signal threshold be measured? The proposal implies that this signal level would need to be met at all points along the PAL service boundary at ground level and all heights above ground level. Is such a requirement feasible? Should there be a single point at which this signal level should be enforced? What is the effect of this proposal on operation of CBSDs and on the interference potential within the band? How feasible would it be for the SAS to calculate and enforce such a limit?

Emission Limits. In the NPRM we sought comment on whether to adopt out-of-band emission (OOBE) limits or other requirements to protect services in adjacent bands from harmful interference. We also asked for comment on the appropriate OOBE limits for small cells in the 3.5 GHz Band and the interference protection threshold limits of relevant services. Several commenters highlighted the importance of protecting incumbent and adjacent band services but differed as to the specific protection criteria. Some commenters presented co-existence analysis and protection distances based on long-standing 43 + 10 log (P) dB OOBE limits. Issues specifically related to OOBE that could affect the operations of earth stations in the C-Band are addressed in detail in section III(B)(3)(b). We also seek comment on whether to specify particular OOBE limits.

The Commission's rules generally limit the amount of radio frequency (RF) power that may be emitted outside of, or in a range of frequencies outside of, the assigned frequencies/channel(s) of an RF transmission. Moreover, the Commission has previously concluded that in certain circumstances, attenuating transmitter OOBEs to at least 43 + 10 log (P) dB is appropriate to minimize harmful electromagnetic interference between operators. This limit has served well as a basis for development of industry standards which may impose tighter limits in certain cases. For Priority Access and GAA operations in the 3.5 GHz Band, we propose to apply the limit of 43 + 10 log (P), which is equivalent to −13 dBm/MHz, to all emissions outside of channel assignments and frequency authorizations by SAS in the 3.5 GHz Band. We seek comment on this limit and whether it should be more stringent (*i.e.,* at a lower power spectral density) given the state-of-the art of modern radio technologies, and the potential gains in spectral efficiency and minimizing interference coupling distance between neighboring radios operating in the 3.5 GHz Band.

Notwithstanding the foregoing paragraph, we recognize the need for Citizens Broadband Radio Service operations to protect incumbent and dissimilar radio services with sensitive weak signal receivers such as in-band and out-of-band FSS earth stations and DoD radar systems. These incumbent radio service operations may be within and adjacent to the 3.5 GHz Band. Protection thresholds for weak signal receivers and minimizing the interference coupling distance to these receivers from new 3.5 GHz Band transmitters may require greater out-of-band attenuation (lower than −13 dBm/MHz) than can be achieved within the RF filter pass-band of 3.5 GHz Band radios. Striking the proper balance between the emission limits of CBSDs and End User Devices, along with the protection thresholds of incumbent receivers, may require more stringent OOBE limits in certain circumstances. We also recognize that there has been considerable technological advancement in transmitter and receiver device technologies deployed in the mobile broadband industry over recent years, such that more stringent OOBE limits may be practical without undue burden to manufacturers and operators.

For example, the current LTE standards for the use in PCS requires mobiles in 1850–1915 MHz to meet a limit of −50 dBm/MHz in 1930–1995 MHz. The current capabilities for mobile broadband manufacturers will support this level of tolerance for interference. Given that other mobile broadband service operations may already be imposing OOBE at the −40 dBm/MHz level, we propose this limit specifically for CBSD emissions above 3680 MHz and below 3520 MHz. We recognize that a more stringent limit would enable closer proximity of neighboring service operations. We seek comment as to whether this limit should be more stringent at −50 dBm/MHz.

In general, while OOBE limits to 40 dBm/MHz are reasonable and not burdensome, a spectral transition gap immediately above and below the edges of the 3.5 GHz Band may be necessary given the limitations of RF/radio filter technology, in stepping down from an in-band limit of −13 dBm/MHz to an out-of-band emission limit of −40 dBm/MHz. Some current research indicates that a transition gap of approximately 1 percent of the band edge frequency may be within the state-of-the-art of existing radio/filter technologies. Therefore, we propose a transition gap of 30 MHz above 3650 MHz and 30 MHz below 3550 MHz, for setting the OOBE attenuation levels to −40 dBm/MHz. We seek comment on the size of this transition gap, whether it is in the range of existing RF filter technology, and whether the gap could be smaller through the use of more narrow RF filters in CBSD and user devices (*e.g.,* two RF filters over 3550–3650 MHz, one covering the lower 50 MHz and the other covering the upper 50 MHz).

Reception Limits. Priority Access Licensees may be authorized for operation in the same geographic area, with other Priority Access Licensees authorized to operate in adjacent or near-adjacent channels. The potential for interference between two or more Priority Access Licensees depends on both the transmitter and receiver performance of the respective radio systems, because unwanted RF energy received by a CBSD can be caused by both the emissions from an adjacent licensee spilling into the desired frequencies of operation, as well as the imperfections of radio receivers. Establishing an RF field strength/power spectral density that PAL receivers would need to accept from nearby licensed transmitters, would effectively define the spectrum rights between PALs, and enable the SAS to assign these rights with clear obligations between respective licensees. We seek comment on this approach.

While the Commission's rules in this regard are technology neutral, we note the signal strength levels of undesired interfering signals in widely adopted industry standards for receiver performance (*e.g.,* 3GPP LTE). We recognize the in-band and out-of-band blocking characteristics and adjacent channel selectivity of modern radio receivers that must perform over a high dynamic range of RF power levels. We note that the interfering signal mean power, for acceptable Home Base Station (HeNB; Femtocell) adjacent channel selectivity and blocking, ranges in the relevant 3GPP standards between −28 dBm and −15 dBm (in all LTE channel bandwidths) with moderately high wanted signal power. The 3GPP interfering signal power for acceptable LTE User Equipment adjacent channel selectivity and blocking performance, in many cases is −30 dBm or above. Therefore, we propose a power spectral density limit of −30 dBm/10 megahertz as the interference limit that CBSDs operating on a Priority Access basis must accept, not to be exceeded with greater than 99 percent probability,

unless the affected user agrees to a higher or lower limit and communicates such agreement to the SAS. Establishing a probability threshold is important because worst-case conditions for highly transient and unlikely RF interference events would otherwise establish an excessive constraint on neighboring radio service operations. Would such a scheme be feasible for the SAS to administer? That is, how difficult would it be for the SAS to track, manage and enforce agreements between different users? What mechanism would be used to communicate such agreements to the SAS? How would an SAS be assured that all affected users are in agreement?

As described previously, GAA users must not cause harmful interference to and must accept harmful interference from Incumbent Users and Priority Access Licensees. Therefore, we propose that a GAA CBSD be required to change its operational frequencies, lower its transmit power, or cease transmitting in accordance with instructions from the SAS if its operations are causing harmful interference to higher tier users. We seek comment on this proposal and any operational details necessary to ensure that the requirement is complied with. What is an acceptable response time for GAA CBSDs to comply with instructions from the SAS? How frequently should CBSDs be required to query the SAS regarding the status of their operations or should CBSDs only query the SAS when they change location in excess of the accuracy requirements and otherwise adjust operations only when receiving instructions from the SAS? What are the implications for spectrum efficiency and network traffic for various communication requirements between CBSDs and the SAS?

We seek comment on these proposed rules. We also seek comment on methods and procedures that may be employed by Priority Access Licensees or the SAS to enforce these thresholds. We encourage commenters to provide detailed technical and cost benefit analyses analyses to support their proposals.

In addition, as we noted in the Licensing PN, the TAC has been studying spectrum interference policy and receiver standards in general, and it recommends that the Commission consider forming one or more multi-stakeholder groups to study such standards and interference limits policy at suitable service boundaries, such as those related to the 3.5 GHz Band. The Wireless Innovation Forum, in its comments to the Licensing PN, recommended that the FCC encourage the formation of industry led multi-stakeholder groups, proposed key characteristics of such a process, and committed to establishing such a multi-stakeholder process to develop recommendations for the 3.5 GHz Band and other band opportunities. Consistent with the recommendations of the TAC, we encourage and suggest industry action to charter a technical group of stakeholders to develop industry coordination agreements and protocols, including technical options and methods for managing spectrum access that would improve access to and make efficient use of the 3.5 GHz Band. What should the scope and charter be of such a multi-stakeholder group? What should be the governance structure of such a group?

f. Subpart F—Spectrum Access System

The overall effectiveness of our proposals depends largely on the development and implementation of a robust SAS. We therefore propose to codify several high-level SAS requirements in the Part 96 rules. Following the TVWS database model, we expect that industry participants will take it upon themselves to develop technical implementations of these requirements and, where applicable, to develop industry-wide standards.

Our proposed rules also assume that multiple SAS Administrators and, consequently, multiple SASs would be authorized to operate in the 3.5 GHz Band, much as multiple databases have been authorized in the TVWS context, to ensure that consumers are provided with a robust set of choices in the marketplace. We seek comment on what techniques could be used to effectively coordinate multiple SASs in the band. What other implementation challenges arise from the possibility of multiple SAS providers? Are they solvable? We seek comment on the proposal to authorize multiple SAS providers. In responding to the questions and proposed rules in this section, we ask commenters to consider the implications of multiple authorized SASs and to address these issues in their filings.

We also intend to institute a comprehensive approval process for SASs and SAS Administrators that closely follows the multi-step process used to test, certify, and approve TVWS databases and administrators. In the TVWS context, prospective database administrators were invited to submit proposals outlining how their systems would meet the Commission's requirements for database operators and provide information sufficient to show that they have the technical expertise to administer a database and a viable business plan for operating a database for a five-year term. OET then reviewed these proposals and approved the proposals of those operators that met the requirements. Approved operators were then required to attend mandatory workshops to ensure compliance with the rules, meet milestone dates set by OET for reporting and compliance, and submit to rigorous real-world testing of all database elements prior to making their services available to the public. By following the precedent set in the TVWS proceeding, we can ensure that the technical solutions and developed by prospective SAS Administrators are consistent with the letter and spirit of our high-level rules, especially with regard to the protection of Incumbent Access tier users.

(i) Spectrum Access System Purposes and Functionality (§ 96.43)

We sought comment on the essential high level requirements of the SAS in both the Licensing PN and the NPRM. In addition, in recognition of the complexity of the proposed SAS framework, OET and the Bureau held a workshop to discuss the operational and functional parameters of the SAS. The workshop and associated technical papers were organized according to the following focus areas: (1) General Responsibilities and Composition of the SAS; (2) SAS Functional Requirements; (3) SAS Monitoring and Management of Spectrum Use; and (4) Issues Related to the Initial Launch and Evolution of the SAS and Band Plan.

While commenters and workshop presenters submitted a diverse set of positions regarding the necessary features of the SAS, most agreed that an effective SAS would need to be more dynamic and responsive than the current TVWS database. Moreover, many commenters agreed that the FCC should set only baseline parameters and guidelines for the SAS and should allow industry stakeholders to develop detailed policies and standards to facilitate operation consistent with the Commission's rules. Some commenters that supported a two-tiered licensing model also advocated a simplified, ''binary'' SAS that would only inform Priority Access Licensees whether or not they could operate in a given area or frequency range without causing harmful interference to incumbents. Other commenters opposed giving the SAS the ability to dynamically assign channels or modify the maximum allowable transmit power for CBSDs.

After thorough review of the record and using the TVWS rules as a guide,

we propose that authorized SASs would perform the following core functions:

- Determine the available frequencies at a given geographic location and assign them to CBSDs;
- Determine the maximum permissible radiated transmission power level for CBSDs at a given location and communicate that information to the CBSDs;
- Register and authenticate the identification information and location of CBSDs;
- Enforce Exclusion Zones to ensure compatibility between Citizens Broadband Radio Service users and incumbent federal operations;
- Protect Priority Access Licensees from harmful interference from General Authorized Access Users;
- Reserve the use of GAA channels for use in a CAF;
- Ensure secure transmission of information between the SAS and CBSDs.

Under our proposal, each SAS would provide nationwide service. Each SAS would also collect and retain all information provided by CBSDs and Incumbent Users according to the proposed rules and enforce robust security protocols to protect such information. If multiple SASs are authorized, each SAS would be responsible for sharing this information with other authorized SASs to ensure effective coordination of operations within the band. The proposed rules outline the essential requirements for a successful SAS and would promote innovation and productive use of the 3.5 GHz Band. Further, these rules represent the lightest regulatory approach possible to accomplish the core objectives of the SAS.

We seek comment on these proposed rules. Specifically, do the proposed rules accurately describe the necessary functions of an SAS? What additional elements, if any, should be included in the SAS? What responsibilities should SASs (and SAS Administrators) have to maximize use by and minimize interference among GAA users, notwithstanding any absence of interference protection rights that may be extended to such users under our rules? How should the Commission most appropriately discharge its Title III responsibilities in supervising these and other functions that may be delegated to the SASs and SAS Administrators? Are the proposed rules unduly burdensome for potential SAS Administrators? Could a compliant SAS be built and operated using existing or ''in development'' technology?

In addition, under this proposal multiple SASs could be authorized, much as multiple databases have been authorized in the TVWS context, to ensure that consumers are provided with a robust set of choices in the marketplace. We seek comment on what techniques could be used to effectively coordinate multiple SASs in the band? What other implementation challenges could arise from the possibility of multiple SAS providers? Are they solvable? We seek general comment on the proposal to authorize multiple SAS providers.

(ii) Information Gathering and Retention (§ 96.44)

To protect Incumbent Users and effectively coordinate Citizens Broadband Radio Service users, we propose that the SAS retain information on all operations within the 3.5 GHz Band. For CBSDs, such information would include all data that they are required to transmit to the SAS pursuant to the proposed § 96.36. For incumbent FSS operators, the SAS would maintain a record of the location of protected earth stations as well as the direction and look angle of all earth station receivers and any other information needed to perform its functions. For incumbent federal users, the SAS would include only the geographic coordinates of the Exclusion Zones. We seek comment on these proposed rules and alternative approaches.

With regard to federal operations, if Exclusion Zones are altered or other incumbent protection criteria implemented in future phases of this proceeding, the SAS may eventually need to gather and manage a significant amount of data on federal operations. Much of this information is likely to be sensitive or classified and would require additional safeguards that may not be necessary to protect non-federal information. Some commenters raised the possibility of establishing a separate database to store sensitive federal information and instruct registered SASs on the required protection contours for federal operations. We seek comment on whether a separate database should be established for federal information. Would such a database be more efficient and secure than entrusting federal information to each registered SAS? What additional security measures should be required for a database holding sensitive federal information? Who should maintain such a database? We will continue to work with NTIA and incumbent federal users to develop this aspect of the SAS requirements.

Some commenters have argued that the SAS should be required to incorporate spectrum sensing information from CBSDs or other remote beaconing and sensing sites to accurately detect incumbent usage models and respond to the interference environment. We seek comment on whether such capabilities would be helpful for the operation of the SAS.

(iii) Registration and Authorization of Citizens Broadband Radio Service Devices (§ 96.45)

In addition to gathering required information from CBSDs, the SAS would confirm and verify the identity of any CBSD seeking to use the 3.5 GHz Band prior to authorizing its operation. The SAS would also prevent CBSDs from operating within any Exclusion Zones. We seek comment on these proposed rules.

(iv) Frequency Assignment (§ 96.46)

As discussed in section III(A)(1)(a)(7) above, under our proposal, assignment of PAL channels and GAA frequencies in the 3.5 GHz Band would be a dynamic process. The SAS would be responsible for determining the available and appropriate frequencies at a location using the location information supplied by CBSDs, compliance with Exclusion Zones, the authorization status and operating parameters of CBSDs in the surrounding area, and such other information necessary to ensure effective operations of CBSDs. The SAS would also take into consideration any channel requests submitted by CBSDs as well as geographic and spectral efficiency considerations. We also propose that the SAS be able to provide a list of available frequencies in a given area and confirm that any CBSDs causing harmful interference to an Incumbent User have been deactivated or reassigned upon request. We seek comment on these proposed rules.

(v) Security (§ 96.47)

We propose to require that the SAS employ protocols and procedures to ensure that all communications and interactions between the SAS and CBSDs are accurate and secure and that unauthorized parties cannot access or alter the SAS or the list of frequencies sent to a CBSD. These protocols and procedures would be reviewed and approved by the Commission before the SAS Administrator could be certified. We seek comment on these proposed rules and on any additional safeguards needed to protect sensitive federal information.

(vi) Spectrum Access System Administrators (§ 96.48)

Drawing on our experience with the TVWS, we propose that SASs be operated only by designated SAS Administrators that have been approved by the Commission. As noted above, this approval process will be essential to determining that the SAS can meet the regulatory requirements, without having to provide overly prescriptive and detailed rules about its implementation.

To this end, we propose that SAS Administrators be required to:

- Maintain a regularly updated database that contains the information described in the proposed rules;
- establish a process for acquiring and storing in the database necessary and appropriate information from the Commission's databases;
- establish and follow a process for ensuring compatibility between Citizens Broadband Radio Service users and Incumbent Users, including enforcement of Exclusion Zones;
- establish and follow processes for registering and coordinating Priority Access Licensees and GAA users;
- establish and follow protocols and procedures to ensure that Incumbent Users are protected from harmful interference from Citizens Broadband Radio Service operators;
- establish and follow protocols and procedures to ensure that Priority Access Licensees are protected from harmful interference from Priority Access and GAA users;
- establish and follow protocols and procedures to ensure that all communications and interactions between the SAS and CBSDs are accurate and secure;
- make its services available on a non-discriminatory basis;
- respond in a timely manner to verify, correct or remove, as appropriate, data in the event that the Commission or a party brings claim of inaccuracies in the SAS to its attention;
- securely transfer the information in the SAS to another designated entity in the event it does not continue as the SAS administrator at the end of its term;
- cooperate with other SAS Administrators to develop a standardized process for coordinating and exchanging required information;
- provide a means to make public information available to the public in an accessible manner;
- establish protocols to maintain appropriate security clearances and other security measures as may be determined by the Commission for access to and storage of required federal incumbent information if required in future phases of this proceeding.

Under our proposed rules, SAS Administrators would be authorized to provide service for a five-year term, which could be renewed at the Commission's discretion. We further propose that the Bureau review applications for certification and establish procedures for reviewing the qualifications of prospective SAS Administrators. What conflict of interest requirements, competitive or other selection process, technical qualifications, or other standards should govern this process? Do other models involving Commission selection of third-party assistance provide useful insights into these questions?

We seek comment on this proposal. Do the proposed rules establish appropriate qualifications for SAS Administrators? What procedures should the Bureau adopt to select SAS Administrators, ensure that they are qualified to perform their duties, and ensure that SASs are able to perform the functions required by the proposed rules. What steps should the Commission take to ensure that SAS Administrators are properly supervised and operating within the bounds of the law? Commenters should provide a detailed analysis, including economic costs and benefits, of any alternate or supplemental approach they propose.

(vii) Spectrum Access System Administrator Fees (§ 96.47)

We propose to allow SAS Administrators to collect reasonable fees from Priority Access Licensees and General Authorized Access users for use of the SAS and associated services. We based this proposal on a similar rule adopted for TVWS database administrators. We seek comment on this proposed rule. We also seek comment on whether SAS Administrators should be permitted to collect fees from all Citizens Broadband Radio Service users. Specifically, should SAS Administrators be permitted to collect fees from GAA users? Or should fees be collected only from Priority Access Licensees? Would limiting fees to Priority Access Licensees effectively promote diverse and innovative use of the GAA service tier? What role, if any, should the Commission play in resolving any disputes or other issues regarding the collection of any such fees by the SAS Administrators?

2. Modifications to Existing Rule Parts

In addition to the proposed new Part 96, we also seek comment on any necessary amendments to existing rule parts, as discussed below.

a. Table of Frequency Allocations (§ 2.106)

In the NPRM, the Commission requested comment on the allocation structure that should be used to accommodate the Citizens Broadband Radio Service. The NPRM proposed to retain the primary allocation for existing federal radar systems in the 3.5 GHz Band, while also proposing to allocate that band for non-federal fixed and mobile use. The NPRM observed that this proposed structure is consistent with international allocations for use of the 3.5 GHz Band, and also appears consistent with requirements for the allocation of flexible use spectrum under Section 303(y) of the Communications Act. However, the NPRM sought comment on what allocation scheme would best accomplish the goals set forth in that NPRM, and also inquired how that scheme should account for potential Federal fixed and mobile use of the band.

The NPRM also proposed to restrict primary non-federal FSS earth station use in the 3600–3650 MHz band to the FSS earth stations licensed or applied for as of the effective date of the Report and Order in this proceeding. Additionally, the NPRM noted the existence in the 3.5 GHz Band of federal allocations for Aeronautical Radio Navigation Service and mobile ground-based radars, and stated that the Commission would work with NTIA regarding the continued need for those allocations. Moreover, the NPRM noted the existence of a non-Federal secondary allocation for radiolocation services, and requested comment on what existing 3.5 GHz band allocations should be maintained. Finally, the NPRM sought comment on the potential for interference to and from existing and future international operations in the 3.5 GHz Band.

There was limited comment on the allocation proposals per se, although the great majority of commenting parties support shared federal/non-federal use of the 3.5 GHz Band for new broadband technologies. This suggests implicit support for adopting an allocation structure that will allow for this type of use. Of the commenters that explicitly discuss the allocation proposals, the Utilities Telecom Council, Edison Electric Institute, and National Rural Electric Cooperative Association contend that a non-federal fixed and mobile allocation of the 3.5 GHz Band would spur innovation and investment in new wireless technologies with little or no impact on incumbent uses, including federal radar systems, and

support the proposal to restrict FSS earth station use of the 3600–3650 MHz band to the FSS earth stations licensed or applied-for as of the effective date of the Report and Order in this proceeding. SIA, however, expresses concern about the impact on FSS earth stations and contends that, if there are any small cell operations in allowed in the 3.5 GHz Band, they should be permitted only on a secondary basis.

We propose to add new primary fixed and land mobile allocations to the 3.5 GHz Band to permit commercial use of the band consistent with our accompanying licensing and service rule proposals. The adoption of a United States allocation structure that permits that band to be used for fixed and land mobile services on a primary basis is also consistent with the approach the Commission has previously taken when it has determined that uses of other bands for new broadband purposes was in the public interest. Moreover, the proposed allocation is consistent with the Region 2 International allocation for the band. We do not think it serves the public interest to pursue a secondary fixed and mobile allocation, as suggested by SIA, and we will continue to propose that FSS earth stations be restricted to those that were licensed or applied for as of the effective date of the Report and Order in this proceeding. As we observed in the NPRM, our proposed treatment of FSS earth stations is the same as what has previously been implemented in the 3650–3700 MHz band. Additionally, we note that FSS earth stations are authorized to use other nearby spectrum at 3.7–4.2 GHz on a primary basis. For these reasons, providing the Citizens Broadband Radio Service a primary allocation offers important new opportunities to make robust use of our spectrum resources, and we propose appropriate technical rules to protect existing incumbent FSS operations.

We further observe that, with respect to the GAA tier, some commenting parties express a preference for an unlicensed (Part 15) framework, rather than the NPRM's proposed licensed-by-rule framework. We nevertheless propose to adopt a primary fixed and land mobile allocation across the entire band. Doing so could afford us the flexibility to adopt a licensing framework for all Citizens Broadband Radio Service tiers that will ensure that these operations are prioritized over existing secondary users in the band. This could also help ensure that quality spectrum is available for GAA users. We seek comment on this proposal and other licensing frameworks.

In addition to proposing to add fixed and land mobile allocations to the 3.5 GHz Band in the non-Federal Table, we propose to remove the secondary radiolocation service allocation from that band in the non-Federal Table and to add three US footnotes (US106, US107, and US433, respectively) to: (1) Permit 3.5 GHz Band non-federal stations in the radiolocation service that were licensed or applied for prior to the effective date of any Report and Order we adopt in this proceeding to continue to operate on a secondary basis until the end of the equipment's useful lifetime; (2) limit primary FSS use of the 3600–3650 MHz band to earth stations authorized prior to, or granted as a result of an application filed prior to, the effective date of any Report and Order we adopt in this proceeding, and constructed within 12 months of initial authorization; and specify that FSS use of that band for all other earth stations will be on a secondary basis to non-federal stations in the fixed and land mobile services; (3) both specify provisions for 3.5 GHz Band federal use of the aeronautical radionavigation (ground-based) and radiolocation services, and provide for continued federal use in light of new non-federal fixed and mobile operations in the band; and (4) prohibit federal use of airborne radar systems in the 3.5 GHz Band. We seek comment on these proposals, including whether the potential effects on federal incumbents would serve the public interest.

We also note that the NPRM sought comment on allowing federal fixed and mobile use in the band. Should we consider permitting federal fixed and mobile operations in the 3.5 GHz Band? If so, how should such uses be effectively implemented and managed? What, if any, implications would federal fixed and mobile use have for non-federal use of the band?

b. Procedures for Priority Access Licenses Subject to Assignment by Competitive Bidding (§ 1.2101 et seq.)

If we adopt our proposed geographic area licensing approach for PALs that would permit the filing and acceptance of mutually exclusive applications, we will be required to resolve such applications through competitive bidding consistent with the mandate of Section 309(j) of the Communications Act. Accordingly, we seek comment on a number of proposals relating to competitive bidding for PALs in the 3.5 GHz Band.

(i) Application of Part 1 Competitive Bidding Rules (§ 1.2101 et seq.)

We consider here changes to the Commission's general competitive bidding rules set forth in Part 1, Subpart Q, of the Commission's rules that may be necessary or desirable to conduct an auction of initial PALs in the 3.5 GHz Band. We propose to employ the general competitive bidding rules set forth in Part 1, Subpart Q to resolve any mutually exclusive applications received for initial PALs. The Commission's competitive bidding rules provide a framework from which the Commission develops final procedures—through a series of public notices with opportunities for comment—for the particular competitive bidding processes that it conducts. The public notice process allows both the Commission and interested parties to focus and provide input on certain details of the auction design and the auction procedures after the rules have been established and the remaining procedural issues are better defined. Our experience with spectrum license auctions demonstrates the value of this approach and therefore, we anticipate following a similar approach here. Under this proposal, any modifications that the Commission may adopt for its Part 1 general competitive bidding rules in the future would apply to an auction of PALs in the 3.5 GHz Band. In addition, consistent with our long-standing approach, auction-specific matters such as the competitive bidding design and mechanisms, as well as minimum opening bids and/or reserve prices, would be determined through these public notices. We seek comment on this approach, including the costs and benefits of this approach. We also seek comment on whether any of our Part 1 rules would be inappropriate or should be modified for an auction for licenses in the 3.5GHz Band.

(ii) Applications Subject to Competitive Bidding

To date, the Commission has considered two or more parties seeking to bid for a particular license to present mutually exclusive applications for the license, irrespective of whether each party subsequently bids for the license. Where only one party seeks a particular license offered in competitive bidding, that license will be removed from the competitive bidding process and the Commission will consider that party's non-mutually exclusive application for the license through a process separate from the competitive bidding. This has worked well with respect to defined

licenses that have parameters such as frequency and geography defined apart from and in advance of competitive bidding.

Here we have proposed that the Commission, on an annual basis, would open windows for applications for available PALs. To accommodate the ability of licensees to aggregate consecutive one-year terms, the Commission may offer multiple consecutive years of PAL rights simultaneously. At the close of such a window, the Commission would hold an auction to assign PALs where there are mutually exclusive applications pending. Consistent with the Commission's approach in other spectrum auctions, mutual exclusivity would be triggered when more applications are submitted than can be accommodated geographically, temporally, and spectrally. Under our proposed licensing framework in which we assign PALs in an auction that offers generic (non-frequency-specific) blocks, we propose to determine that mutual exclusivity exists when the total number of applicants for a PAL in a specific geographic area for a given year exceeds the total number of PALs available in that geographic area for that year. We seek comment on this proposal.

(iii) Bidding Process Options

Competitive Bidding Design Options. The Commission's current rules list types of auction designs from which the Commission may choose when conducting competitive bidding for spectrum licenses. These options include sequential and simultaneous auctions, single and multiple round auctions, and auctions with combinatorial bidding. Since the Commission's Part 1 competitive bidding rules were originally adopted, auction design has evolved and continues to evolve in new directions, sometimes combining several of these listed auction design elements and sometimes utilizing different elements.

In the Broadcast Incentive Auction Notice of Proposed Rulemaking, the Commission proposed to revise the current list of auction design options set forth in § 1.2103 of the rules. In particular, the Commission proposed a rule that provides for the establishment of specific auction procedures governing bid collection, assignment of winning bids, and the determination of payment amounts in spectrum license auctions. Such auctions may use one or more rounds of bidding and/or contingent stages of bidding; and may incorporate bids or offers that simply specify a price for an item, that indicate demand for an item at a specified price, or that are more complex. We anticipate that procedures established to implement these broad auction design elements would take into account sound economic principles and practice and the needs of the Commission and the bidders. We seek comment on whether, in light of the licensing proposals set forth in this FNPRM, we should adopt any other or additional revisions to § 1.2103 in addition to those proposed in the Broadcast Incentive Auction proceeding. Given the large number of license areas and relatively short license terms envisioned for PALs, are there any auction mechanisms that would enhance the Commission's ability to effectively manage the use of the Priority Access tier?

In, § 1.2104 of the Commission's current rules sets forth various mechanisms that can be used in connection with any system of competitive bidding for Commission licenses. For example, the rules enable the Commission to determine how to sequence or group the licenses offered; whether to utilize reserve prices, minimum opening bids and minimum or maximum bid increments; whether to establish stopping or activity rules; and how to determine payments required in the event of bid withdrawal, default, or disqualification. We note, however, that § 1.2104 does not attempt to list exhaustively all potential aspects of the Commission's procedures for competitive bidding.

The Commission recently proposed to amend the current stopping rule contained in § 1.2104 to permit the Commission to establish stopping rules before or during multiple round auctions in order to terminate the auctions not only within a reasonable time, but also in accordance with the goals, statutory requirements, and rules for the auction, including the reserve price or prices. The revised stopping rule would thereby allow us to adopt criteria to determine, prior to terminating the auction, whether such requirements have been met. We seek comment on whether we should adopt any other revisions to § 1.2104, in addition to those proposed in the Broadcast Incentive Auction proceeding?

Payment Rules. Our existing competitive bidding rules also establish additional procedures regarding the competitive bidding process. More specifically, our existing rules address applications to participate in competitive bidding, communications among applicants to participate, reporting requirements, upfront payments from competitive bidding participants, down and final payments by winning bidders, and applications for licenses by winning bidders, as well as the processing of such applications and default by and disqualification of winning bidders. We seek comment on whether these existing rules require any revisions in connection with the conduct of an auction of PALs.

Specifically, we seek comment on whether we should revise any of our payment rules to take into consideration the proposed short license term for PALs, and the potential for applicants to become winning bidders for licenses that do not become effective until a year or more after the initial PAL? For instance, should we revise our upfront payment requirement to better safeguard the Commission against defaults by a winning bidder on consecutive years of a PAL? Should we require a winning bidder for consecutive years of a PAL to make a larger down payment to better safeguard the Commission from defaults in subsequent years? Currently, unless otherwise noted by public notice, the Commission's rules require that within 10 business days after being notified that it is a high bidder on a particular license the winning bidder must submit its down payment necessary to bring its total deposits up to twenty (20) percent of its winning bid(s) or it will be deemed to have defaulted. Should we increase the down payment percentage here to be forty (40) percent of the winning bid(s)? Similarly, unless otherwise specified by public notice, auction winners are required to pay the balance of their winning bids in a lump sum within ten (10) business days following the release of a public notice establishing the payment deadline. Here, we could collect the down payment required for each PAL at the close of the auction, including PALs for consecutive years, but final payment(s) would not be due until we are ready to grant a particular PAL at the beginning of the subsequent license term. Alternatively, in order to provide further incentives for the productive use of spectrum, could the further payment be required upon initiation of service in specific PAL? Will retaining down payments on deposit for consecutive PALs, particularly if the down payment obligation for such PALs is increased, help the Commission safeguard against the potential of default in subsequent years? Are there any statutory or other legal considerations that the Commission should consider in designing payment rules to accommodate these proposals?

We also seek comment on whether we should revise our default rule to ensure that if a winning bidder wins PALs in a licensing area for consecutive years

and defaults on a payment obligation for a PAL in that area, it loses its ability to be granted a license for any winning bids for PALs in that area in any subsequent year, and is considered to be in default on those winning bids? Would such a default provision ensure that a winning bidder could not game the results of an auction by bidding upon consecutive year PALs only to seek to selectively pay for some but not others of those bids at a later date? In situations where the Commission has determined that a bidder's default might have a greater potential to detrimentally impact the integrity of an auction, it has adopted a higher default percentage to serve as deterrent against such an outcome. If we hold an auction that offers individual PALs for several consecutive years, should we hold a winning bidder for such licenses who defaults on its winning bids responsible for a larger default payment? What percentage of the defaulted bid should be assessed as the additional payment portion of the default payment obligation? Should the amount of the additional payment be greater than the percentage prescribed in our rules for defaults on combinatorial bids?

Would such a default rule adequately safeguard the Commission should a winning bidder file bankruptcy between the close of an auction and the date of a future payment obligation? Commenters should address in particular the application of the Bankruptcy Code's requirement that an agency ''may not deny, revoke, suspend, or refuse to renew a license . . . or other similar grant to,'' or ''discriminate with respect to such a grant against,'' a debtor or a bankrupt ''solely because'' it ''has not paid a debt that is dischargeable'' in bankruptcy. In other contexts, the Commission has addressed its potential financial risks arising out of the bankruptcy of a winning bidder by requiring appropriate letters of credit for each winning bid. However, these bids were for Mobility Fund Phase I financial support rather than for spectrum licenses, and thus did not pose the risk of being unable to re-auction and put to more efficient use the spectrum licensed to an entity that later files for bankruptcy. Would the Commission be restricted by the bankruptcy laws in its efforts to recover and re-auction spectrum won by a defaulting bidder that had filed for bankruptcy? Would the costs of obtaining a letter of credit be reasonable in light of the expected value of the spectrum? Would a payment bond be equally effective in giving financial security to the Commission and protecting the Commission from a winning bidder's bankruptcy? Could bids be aggregated for purposes of issuing a letter of credit, without jeopardizing the Commission's ability to recover the auction amounts and any reasonable penalty associated from default? Would the benefits of our proposed annual payment mechanism outweigh the risks in bankruptcy and the associated costs?

Further, we seek comment regarding whether we should amend any of our other Part 1 rules to accommodate our proposals for assigning PALs and facilitate more frequent auctions and the dynamic auction mechanisms that may be required? For example, are there any changes that we should make to the auction application process or the information that we collect from applicants to participate in an auction of PALs? Do we need to amend any of our rules regarding prohibited communications for an auction that offers generic spectrum blocks? In considering our proposed licensing model, are there any particular aspects of the administration of auctions of PALs with which SAS Administrators or another third party could be effective in assisting the Commission, consistent with its statutory responsibilities?

Bidding Credits. In authorizing the Commission to use competitive bidding, Congress mandated that the Commission ''ensure that small businesses, rural telephone companies, and businesses owned by members of minority groups and women are given the opportunity to participate in the provision of spectrum-based services.'' One of the principal means by which the Commission furthers these statutory goals is the award of bidding credits to small businesses. To award these bidding credits, the Commission defines eligibility requirements for small businesses on a service-specific basis, taking into account the capital requirements and other characteristics of each particular service in establishing the appropriate threshold. Bidding credits have proven an effective means to allow small businesses to compete with larger, more well-established companies. However, we also note that in deciding whether to offer bidding credits, the Commission takes into account both the nature of the service and the nature of the parties most likely to be interested in using the spectrum.

Many of our proposals for PALs envision more flexible and dynamic auction and licensing mechanisms for effective and administratively streamlined management of the Priority Access tier. We anticipate that the robust licensing and spectrum access models we propose could serve to ensure that small businesses are given the opportunity to participate in the provision of the Citizens Broadband Radio Service. We therefore seek comment on whether awarding bidding credits in the Citizens Broadband Radio Service would be necessary to ensure the participation of small businesses in competitive bidding. Would our proposals to offer numerous licenses within relatively small geographic licensing areas, and our proposals to cap the number of licenses any particular entity may hold in a license area adequately promote the dissemination of licenses among a wide variety of applicants, including small businesses and rural telephone companies? Likewise, will the one-year license term and the size of the license area we propose make it more likely that small businesses will be able to effectively compete for a PAL and the opportunity to participate in the provision of Priority Access service? Do the unique characteristics of this service reduce the likelihood that small businesses will face barriers in gaining accessing to capital? We request that commenters address the expected capital requirements for service in this band and other characteristics of the service. We invite commenters to use comparisons with other services for which the FCC has already established auction procedures as a basis for their comments regarding whether we should adopt small business size standards and bidding credits for PALs and if so, the appropriate small business size standards. Moreover, to the extent that commenters propose provisions to ensure participation by minority-owned or women-owned businesses, they should address how such provisions should be crafted to meet the relevant standards of judicial review.

We note that under our existing Part 1 rules, a winning bidder for a PAL will be eligible to receive a bidding credit for serving a qualifying tribal land within that market, provided that it complies with the applicable competitive bidding rules. We seek comment on whether any revisions to our rules governing eligibility for or implementation of Tribal land bidding credits are necessary for PALs. In addition, the Commission currently has under consideration various provisions and policies intended to promote greater use of spectrum over tribal lands. We seek comment regarding whether any rules and policies adopted in that proceeding should apply to any licenses that may be issued through competitive bidding in a PAL auction. We also note that the award of bidding credits can be an

administratively intensive process, requiring verification of eligibility and other aspects of the application. We seek comment on whether the relative costs of this process are greater in the context of highly granular PALs as compared to more traditional FCC licenses for large geographic areas and license terms. We also seek comment on the degree to which the administrative process for bidding credits might be reasonably automated to reduce transaction costs.

Commission Notices. Upon the conclusion of spectrum license auctions, the Commission typically issues a public notice declaring the bidding closed and identifying the winning bidders. We propose to do so for the PAL auction. We invite comment on this proposal and ask commenters to address whether there are any other issues we should consider with respect to notifying auction participants and the public of the auction results.

c. Secondary Markets

We seek comment on the extent to which our existing secondary market rules (both for license transfers and for leases) might be appropriately modified with respect to the secondary market for PALs in the 3.5 GHz Band. Commenters had varied opinions about the frequency with which we should conduct auctions for PALs. Some commenters argued for more frequent auctions so as to accommodate changes in market demand for PALs. Others noted that the development of a robust secondary market in the 3.5 GHz Band would be beneficial for potential Priority Access Licensees. We emphasize that, while auctions are a mode of initial assignment, the secondary market could provide a viable means of matching supply and demand in units more granular than our proposed PAL structure. Indeed, we are interested in the possibility that one or more spectrum exchanges, operating pursuant to our secondary market rules, could facilitate a vibrant and deep market for PAL rights. Such an exchange could improve the ability of individual licensees to obtain micro-targeted (in geography, time, and bandwidth) access to priority spectrum rights narrowly tailored to their needs on a highly customizable, fluid basis. We note that any spectrum exchange would be subject to the requirements of Section 310(d) of the Communications Act and other relevant statutory provisions. To the extent that commenters agree with this concept, we request specific and focused comment on any necessary changes to our Part 1 rules to facilitate the secondary market for PALs in the 3.5 GHz Band. We are particularly interested in modifications that could reduce transaction costs and allow increased automation of transfer and lease applications. What would such a spectrum exchange entail? What legal, technical, or logistical issues could be raised by this proposal?

B. Other Issues

In addition to the proposed rules described above, several other issues implicated by this proceeding would benefit from additional, focused comment. We seek further, focused comment on the following issues, and request that commenters provide suggested rules or other specific approaches to implement any proposals they put forward:

- Interference protection for federal incumbents;
- Interference protection for CBSDs from federal radar transmissions;
- Interference protection for in-band FSS operations;
- Interference protection for FSS earth stations in the C-Band; and
- The potential integration of the 3650–3700 MHz band into the Citizens Broadband Radio Service.

1. Protections for Federal Incumbent Access Tier Users

In the NPRM, the Commission requested comment on measures that would optimize the use of spectrum while protecting both incumbent operations and prospective users of the band. Incumbent operations of this band include high-powered DoD radar systems using ground-based, shipboard, and airborne platforms, as well as non-Federal FSS earth stations used for receive-only, space-to-earth operations and feeder links.

In its Fast Track Report, NTIA concluded that geographic separation and frequency offsets could be used to minimize interference between commercial networks and ground-based, airborne, and shipborne radar systems currently operating in the 3.5 GHz Band. However, NTIA's analysis indicated that it would be necessary to put in place extensive exclusion zones to prevent incumbent operations and broadband wireless systems from causing interference to each other. NTIA concluded that effective exclusion zone distances around ground-based and airborne radar systems would extend approximately one to 60 kilometers, coupled with frequency offsets of 40 or 50 megahertz, while exclusion zones around certain high-power shipborne Naval radars would require over-land separation distances of several hundred kilometers. NTIA acknowledged, however, that its analysis assumed deployment of high power, macrocell networks, and stated that its conclusions would require revision to the extent the Commission proposes to implement systems with different technical characteristics.

In the NPRM, the Commission noted that the large exclusion zones and limited signal propagation in the 3.5 GHz Band weighed against the use of macrocell deployment in the band. Instead, the Commission stated that the use of the 3.5 GHz Band could be significantly increased through spectrum sharing and application of small cell technology. The Commission therefore proposed the creation of the Citizens Broadband Radio Service premised on (1) technical rules that focused on the use of low-powered small cells, and (2) the use of a dynamic SAS to manage users of the band. In light of the small cell deployment model, the Commission noted that some of the assumptions made in the Fast Track Report's analysis regarding the requisite exclusion zone distances would not apply and would need to be revisited. The Commission indicated that it may be possible to reduce any exclusion zones through technical and operational parameters for small cells in combination with an effective SAS and other interference mitigation techniques. The Notice therefore requested technical analysis as to how application of small cell and access management technologies may impact interference to and from incumbent 3.5 GHz Band users as well as the size of exclusion zones necessary to ensure compatibility with incumbent and prospective users of the band.

Many of the comments filed in response to the Notice supported the tentative conclusion that the size of Exclusion Zones as estimated by NTIA should be re-evaluated given the proposal to apply the small cell model. We note that the Exclusion Zones were a condition for the Executive Branch agreeing to provide access to this spectrum for non-federal use. As a starting point for continued analysis and discussion, we propose to implement the geographic Exclusion Zones proposed in the Fast Track Report. Nevertheless, preliminary studies have been performed on the potential effects of small cells on radar operations, with additional studies planned, that could lead to a reduction in Exclusion Zones in the near future. We also note that the rules proposed in this FNPRM contemplate additional uses other than small cells, with varying maximum transmit power levels and antenna

gains, which must factor into the consideration of Exclusion Zones.

We are continuing our dialogue with NTIA and the federal agencies on this matter and, if possible, plan to reduce the Exclusion Zone distances from the instant proposal based on the Fast Track Report, which distances, we emphasize, we propose as a starting point for further analysis. We intend to work collaboratively and expeditiously with NTIA and other relevant federal agencies on this project. We emphasize that important technical studies involving federal agencies, industry, and academia are underway and will likely provide data that will be informative in determining whether and to what extent the size of the Exclusion Zones can be reduced. If there are further developments that would enable a reduction in the size of the Exclusion Zones, we encourage participants to file them in the record to ensure that there is sufficient opportunity for public comment prior to issuance of a Report & Order in this proceeding. We will also consider any data and studies submitted in this proceeding in our ongoing discussions with NTIA and other federal agencies on this topic.

Additionally, in the NPRM, the Commission stated that GAA use could be allowed in areas where small cell operations would not cause harmful interference to Incumbent Access tier users but where signals from incumbent users could possibly interfere with GAA uses. However, the NPRM noted that Priority Access users, which have quality-of-service expectations, would only be permitted where CBSD operations would not interfere with incumbent operations, and where harmful interference would not be reasonably expected from Incumbent Access tier operations. It may eventually be practicable to authorize coordinated operations for GAA—and possibly Priority Access—tier users inside the proposed Exclusion Zones. We anticipate such use would involve a level of dynamic access to the spectrum and would be authorized through the SAS. However, adding this kind of dynamic element to the SAS raises many technical and operational questions that are not ripe for resolution at this time. Accordingly, we will explore the topic of dynamic coordinated access within the Exclusion Zones (*i.e.,* converting Exclusion Zones to protection zones) in future phases of this proceeding. We seek comment on allowing Citizens Broadband Radio Service operations within currently designated Exclusion Zones and encourage commenters to submit technical analyses to support their positions.

2. Protections for Citizens Broadband Radio Service Devices From Federal Radar Systems

While the proposed Exclusion Zones will prevent interference from radar systems into CBSDs, the possibility of future CBSD operations in close proximity to high power federal radar systems may require that Priority Access Licensees and GAA users take reasonable measures to protect their CBSDs from these high powered operations. Radar systems operating at the power levels described in the NTIA Fast Track Report could lead to peak field strengths in excess of 180 dBuV/m (~33 dBm) at line of sight distances of approximately 1 km. We also recognize that modern receiver technologies incorporate Surface Acoustic Wave/Bulk Acoustic Wave filters that may have peak input power limits in the range of 10 dBm to 33 dBm. To ensure that end users are not adversely affected by the hard failure of receiver components due to interference from such radars, we propose that CBSDs must be capable accept interference in authorized areas of operation up to a peak field strength level of 180 dBuV/m. We seek comment on these proposals and ask that commenters support their proposals with detailed technical analyses. How would such a requirement impact the design and cost of equipment for this band? Alternatively, are there measures that licensees can take to minimize the potential of receiving interference from federal incumbent operations?

In addition to the high-power interference effects discussed in the previous paragraph, pulsed radar signals can also cause degradation of CBSD receiver performance. NTIA recently performed measurements to examine the impact of pulsed radar signals on digital receiver performance. Three receiver parameters were examined: (1) Data throughput rates; (2) block error rates; and (3) internal noise level. These performance parameters were measured as a function of radar pulse parameters and the incident power level of radar pulses. We seek comments on how the NTIA report can be used to develop thresholds for CBSD receivers to be used in assessing potential interference from federal incumbent operations.

3. Protections for Fixed Satellite Service Earth stations

a. Earth Stations in the 3.5 GHz Band

As noted in the NPRM, the Commission has licensed primary FSS earth stations to receive on frequencies in the 3600–3650 MHz band in 37 locations. Currently, FSS earth station facilities in 32 cities are authorized to receive in the 3625–3650 MHz sub-band, and Vizada, Inc. operates two gateway earth stations (located northeast of Los Angeles and New York City) that provide feeder links for Inmarsat's L-band mobile-satellite service system. While the Commission directed the International Bureau to cease accepting applications for new earth stations in the 3.5 GHz Band in an order accompanying the NPRM, these existing stations would be included in the Incumbent Use tier and afforded protection from lower-tier operations in the proposed Citizen's Broadband Radio Service.

The NPRM also sought extensive comment on appropriate interference protection and mitigation strategies for incumbent FSS earth stations. Specifically, the NPRM sought comment on whether geographic protection zones would be necessary to protect existing FSS earth stations from harmful interference. Commenters offered a variety of perspectives on these questions in the record.

Notably, SIA filed several comments and letters arguing that the Commission should allow small cell operations in the 3.5 GHz Band only if it can show that in-band and C-Band satellite services will be protected from interference and asking the Commission to lift the freeze on earth station applications in the band. SIA also submitted a technical analysis that indicated that in-band FSS earth stations would require protection distances of up to 107.4 km to mitigate long-term interference and 487 km to mitigate short-term interference.

On September 3, 2013, Google made an ex parte submission addressing potential interference from proposed Citizens Broadband operations into existing in-band and out-of-band satellite earth stations. With regard to grandfathered FSS earth stations in the 3.5 GHz Band, Google asserts that these earth stations can be protected by the SAS through a combination of coordination, spectral separation, and protection zones. Google also asserts that SIA's submission overstates the potential for interference from CBSDs into in-band FSS earth stations. According to Google, these overstatements are largely due to inappropriate assumptions about terrain, small cell emissions output, and typical small cell power levels as well as a reliance on an ITU interference protection standard that was not intended to apply in this context.

Harris Corporation filed comments encouraging the Commission to extend the Incumbent Access tier to include satellite earth stations and incumbent teleport stations in the adjacent 3650–3700 MHz band and limit mobile and itinerant commercial use of the 3.5 GHz Band. Baron Services, Inc. (Baron) also filed comments encouraging the Commission to adopt rules that would protect S-band weather radar systems with equipment authorizations in the 3.5 GHz Band. To accomplish this, Baron suggests that the Commission enforce substantial exclusion zones around S-band radar installations and impose strict OOBE limits on Citizens Broadband Radio Service base stations and handsets. As stated above, the proposed Citizens Broadband Radio Service would be co-primary with existing incumbent operations and would supersede existing secondary uses of the band in the table of allocations. At this time, as stated above, we do not believe that it would be in the public interest to grant Incumbent Access tier status to current or planned non-federal secondary radiolocation operations in the band.

We propose to require CBSDs to avoid causing harmful interference to currently operational grandfathered FSS earth stations. It may be possible to minimize or eliminate geographic protection areas around FSS earth stations by incorporating detailed information on the ''look angles'' of FSS earth stations, the emissions characteristics of CBSDs and End User Devices, detailed regional topographical information, and other relevant variables into the SAS. An analytic model of expected aggregate power-flux density could be used by the SAS to authorize operations to ensure that aggregate power-flux density interference limits are not exceeded, over a specified probabilistic function. Can a Complementary Cumulative Distribution Function (CCDF) of the aggregate power flux density be used for this purpose? We seek comment on the necessity of geographic protection areas and, if necessary, the size of such areas. We also seek comment on additional or alternative mitigation strategies that could be employed to prevent harmful interference to FSS earth stations from CBSDs. What criteria should the SAS incorporate to ensure that FSS earth stations are protected while maximizing the areas available for Citizens Broadband Radio Service operations? How would the SAS manage this data?

We also seek comment on protection approaches other than protection areas. For example, we are interested in whether field strength, power-flux density, or some other technical metric, measured in relation to the earth station's technical configuration (antenna characteristics, etc.) might provide FSS earth stations with adequate protections while maximizing the available geographic area and bandwidth for Citizens Broadband Radio Service Users. To the extent such an approach is dependent upon operation of the SAS, we seek comment on what functionalities would need to be required by rule and what functionalities could be specified through other means (*e.g.,* industry standards, multi-stakeholder groups, etc.). Again, we request that parties provide specific and actionable suggestions in providing comments on this issue, including the potential costs and benefits of these approaches.

b. Earth Stations in the C-Band

In addition to protections for FSS earth stations in the 3.5 GHz Band, we sought comment on the degree to which the performance of FSS receivers in the C-Band could be affected by Citizens Broadband Radio Service users. We also sought comment on methods for mitigating potential harmful interference from Citizens Broadband Radio Service operations into these receivers. Parties submitted multiple comments, presentations, and technical analyses related to this issue. These submissions relied on very different assumptions about CBSDs, the capabilities of the SAS, receiver performance, and other technical criteria and, as a result, commenters reached very different conclusions regarding the need for protection for C-Band earth stations.

Notably, a coalition of media companies and trade organizations, including Fox Entertainment Group, Inc., Time Warner Inc., Viacom Inc., the Walt Disney Company, CBS Corporation, and the National Association of Broadcasters (NAB) (jointly, Content Interests) filed jointly to encourage the Commission to study the potential for interference into C-Band satellite operations before considering commercial operations in the 3.5 GHz Band. Their filings included technical reports from Comsearch and Alion Science and Technology (Alion) that concluded that C-Band earth stations would require significant geographic protection from CBSDs. Alion asserts that separation distances ranging from 600 meters to 9 Km would be required to protect C-Band earth station locations with appropriate filters installed while unfiltered sites would require 19 to 33 Km separation distances. The separation distances would increase to 14 to 28 Km for filtered sites if the full 3550–3700 MHz band is utilized.

The Comsearch Report largely comports with Alion's findings. Comsearch noted that the 43 + 10 log (P) dB OOBE limit proposed in the NPRM is equivalent to OOBE of −13 dBm/MHz (−43 dBW/MHz), the same as the International Telecommunication Union (ITU) and LTE-Advanced (LTE–A) baseline ''Category A'' limits. Comsearch suggests that adopting the ITU's more stringent ''Category B'' limit for OOBE would significantly reduce required protection zones around C-Band earth stations. According to Comsearch, interference could occur at a range of up to 47.6 km from C-Band receivers with typical separation distances of 5.1 km if Category A devices are authorized by the Commission. The typical separation distance would be reduced to 0.7 km if devices are limited to Category B emission limits.

SIA's comments also addressed protection criteria for C-Band earth stations. SIA's technical analysis indicated that C-Band earth stations would require protection zones of up to 36.4 km to protect them from OOBE in the 3.5 GHz Band. SIA also asserts that simply determining the size of these protection zones is insufficient to ensure protection of existing FSS operations and that the Commission must ensure that these protection zones are effectively enforced.

Google also made multiple submissions, including a detailed technical analysis, addressing potential interference from proposed Citizens Broadband operations into C-Band earth stations. Google asserts that emissions from small cells in the 3.5 GHz Band would cause minimal interference issues to C-Band receivers and that any potential interference would come from operations in close spatial and spectral proximity to those earth stations. Moreover, Google claims that the look angle of C-Band earth stations can have a significant effect on potential interference from OOBE and that protection zones can be significantly reduced by including the positions of these receivers in the SAS. While SIA disagrees with many of Google's conclusions, they agree that relevant data related to CBSDs and earth stations could be programmed into the SAS to allow for real-time calculation of required protection distances.

According to Google's studies, accounting for the elevation angle of C-Band dishes coupled with appropriate placement of Citizens Broadband devices can further reduce the required

separation distances and areas around C-Band earth stations. Using Google's assumptions, the maximum required protection distance for any C-Band earth station would be 1.67 km (with an excluded area of only .55 km) for an earth station with a 5 degree elevation. The average protection area for a typical earth station would be approximately 0.285 km. Google asserts that these shaped exclusion zones could be managed and enforced by the SAS and that the same techniques could be applied to grandfathered earth stations in the 3600–3650 MHz band.

Google also asserts that, due to differences in international C-Band allocations, many C-Band earth stations in the U.S. ''listen'' to transmissions well outside of their authorized spectrum allocations. Indeed, Google claims that many such earth stations ''listen'' for transmissions as low as 3400 MHz, a full 300 megahertz below their authorized allocation. The ITU studies cited by SIA consider these equipment specifications in reaching their conclusions about harmful interference from commercial operations in the 3.5 GHz Band. Google asserts that existing C-Band operators should not be afforded special protections for equipment that listens well beyond their licensed allocation. Moreover, according to Google, many C-Band earth stations can effectively mitigate interference from commercial operations in the 3.5 GHz Band by utilizing readily available, low-cost filters. Indeed, Google asserts that C-Band operators already utilize similar filters to protect themselves from Federal radar operations on the 3500–3700 MHz band.

While the proposed Part 96 rules do not necessarily address all concerns about potential interference into C-Band earth stations raised in the record, they do include stricter-than-normal out of band emission limits for CBSDs/user devices, and a spectrum access framework utilizing a dynamic SAS. The SAS can calculate the expected aggregate power flux density at in-band station locations attributable to authorized CBSDs and End User Devices, and authorize operations to ensure that interference protection criteria are not exceeded. We propose an equivalent power flux density (EPFD), which would be the sum of the power flux densities produced at a geostationary satellite system receive Earth station, by CBSD and End User Devices in the area of that earth station. The EPFD would be calculated to take into account the off-axis discrimination of the Earth station receiving antenna assumed to be pointing in its nominal direction. We seek comment as to whether CBSD and End User Device emission limits based on EPFD and SAS authorization controls would adequately address concerns over potential interference with C-Band earth stations, or whether additional protections are necessary.

The ''look angle'' of FSS earth stations would have a significant impact on the potential for interference from CBSDs, particularly those located at moderate angles (*e.g.,* >15°) from the axis of the FSS earth station main lobe. We seek comment on the effect of the ''look angles'' of FSS earth stations for potential interference from CBSDs, including any potential costs and benefits. Would the SAS be able to effectively monitor and manage information on FSS earth station ''look angles'' to calculate EPFD interference limits, and dynamically adjust any potential protection areas around these earth stations accordingly?

We also seek comment on additional mitigation strategies that could be employed to prevent harmful interference to earth stations and reduce or eliminate the need for geographic separation between CBSDs and C-Band earth stations. Specifically, to what degree could filters be utilized to reduce or eliminate harmful interference? Are current commercially available filters sufficient? What would be the likely cost of installing filters in C-Band and 3.5 GHz Band FSS earth stations?

4. Enforcement Issues

We acknowledge that the proposals in this FNPRM may raise unique enforcement issues for the Commission. Managing real time interactions between a large number of potential Priority Access Licensees and GAA Users while ensuring that Incumbent Users are protected from harmful interference could present novel enforcement challenges for the Commission to address. Our proposals, including SAS specifications, CBSD technical requirements, and security protocols would help address some of these issues and facilitate secure and consistent access to the 3.5 GHz Band for all authorized users. Regardless of the degree of automation incorporated into the SAS, the Commission retains ultimate responsibility for ensuring that its rules are enforced. We seek comment on additional enforcement techniques and protocols that could be implemented, inside or outside the SAS, to address the unique enforcement concerns raised by the proposals set forth in this FNPRM.

5. Extension of Part 96 Rules to 3650–3700 MHz Band

In the NPRM, the Commission sought comment on a supplemental proposal to include the adjacent 3650–3700 MHz band in the proposed regulatory regime. As noted in the NPRM, incorporating this additional 50 megahertz would create a 150 megahertz contiguous block of spectrum that could be used by existing licensees in the 3650–3700 MHz band—as well as new licensees—to expand the services that they are already providing. Subsequently in the Licensing PN the Commission sought comment on extending the Revised Framework to the 3650–3700 MHz band, and asked what provisions would need to be made for existing operators and how much transition time would be required.

Commenters generally support the proposal to create a 150 megahertz contiguous block of spectrum, while a few commenters oppose changing the existing framework for the 3650–3700 MHz band. In addition, WISPA believes that existing 3650–3700 MHz users should get priority access protection and have five years to transition to the new framework.

There could be long term gains and significant public interest benefits to extending the rules proposed here to the 3650–3700 MHz band, both in terms of terms of spectrum efficiency and availability, and economies of scale for equipment across the full 150 megahertz. However, we recognize the significant investment that incumbent 3650–3700 MHz licensees have made. Should we incorporate 3650–3700 MHz into the regulatory scheme proposed in this FNPRM, we would seek to do so in a way that would maximize the benefits to all potential licensees, while minimizing the costs to incumbent licensees.

If we extend these proposed rules, we propose to grandfather existing 3650–3700 MHz operations for a period of five years after the effective date of the proposed rules. More specifically, we would treat each incumbent 3650–3700 MHz nationwide licensee (Grandfathered Wireless Broadband Provider) as an Incumbent User within the service contours of its registered base stations or fixed access points during the transition period. During the transition period, existing licensees would be permitted to operate stations in accordance with the technical rules in part 90, subpart Z, if any have been authorized, and would have priority over GAA and Priority Access users in the 3650–3700 MHz band. During this period, Grandfathered Wireless

Broadband Providers would be required to avoid causing harmful interference to federal users and grandfathered FSS earth stations, in accordance with existing part 90 rules. After the transition period, Grandfathered Wireless Broadband Providers would be required to protect incumbent operations in the 3650–3700 MHz band consistent with any applicable protection criteria the Commission develops in conjunction with NTIA, DoD, and other stakeholders. Because the Grandfathered Wireless Broadband Provider would continue to operate under part 90 rules and would not operate equipment that is authorized by the SAS, GAA use would not be permitted to interfere with the service contour of Grandfathered Wireless Broadband Providers during the transition period.

At the end of the transition period Grandfathered Wireless Broadband Providers would have the option, available to all eligible 3.5 GHz Band users, to apply for PALs or to operate on a GAA basis consistent with part 96 rules. During the transition period, Grandfathered Wireless Broadband Provider with overlapping service contours would be required to coordinate with one another as currently required by part 90, subpart Z.

We seek comment on this proposed approach to incorporating the 3650–3700 MHz band into the regulatory scheme described in this FNPRM. In particular, we seek comment on whether the five year transition period proposed is appropriate. What are current equipment upgrade cycles for fixed and mobile equipment in the 3650–3700 MHz band? Given upgrade cycles, what is the incremental cost of upgrading a 3650–3700 MHz system to one that can operate consistent with the proposed Part 96 rules over a five year period? How do these costs weigh against the possibility of upgrading to equipment that could access a full 150 megahertz on a PAL or GAA basis? We seek comment on our proposal to protect the service contour of existing licensees. More specifically what criteria should be used to define the existing service contour? What criteria should be used to define interference to the existing contour from GAA users? We also seek comment on whether there are other grandfathering and transition mechanisms that we should consider.

We also seek comment on how the band should be assigned to GAA and Priority Access tier users after the transition period. Under the proposed rules, a minimum of 50 percent of available bandwidth would be made available for GAA use at any given time in any given geographic area. Would this formulation still be in the public interest if the supplemental proposal is adopted? Notably, Microsoft suggested that a minimum of 50 megahertz of spectrum should be reserved for GAA uses at all times. If we adopt the supplemental proposal, should we guarantee a fixed spectrum floor for GAA (*i.e.,* 50 megahertz) and make the remainder of the spectrum available as PALs? We encourage commenters to consider the costs and benefits of any proposals they put forth.

IV. Procedural Matters

A. Ex Parte Rules

This proceeding shall continue to be treated as a ''permit-but-disclose'' proceeding in accordance with the Commission's *ex parte* rules. Persons making *ex parte* presentations must file a copy of any written presentation or a memorandum summarizing any oral presentation within two business days after the presentation (unless a different deadline applicable to the Sunshine period applies). Persons making oral *ex parte* presentations are reminded that memoranda summarizing the presentation must (1) list all persons attending or otherwise participating in the meeting at which the *ex parte* presentation was made, and (2) summarize all data presented and arguments made during the presentation. If the presentation consisted in whole or in part of the presentation of data or arguments already reflected in the presenter's written comments, memoranda or other filings in the proceeding, the presenter may provide citations to such data or arguments in his or her prior comments, memoranda, or other filings (specifying the relevant page and/or paragraph numbers where such data or arguments can be found) in lieu of summarizing them in the memorandum. Documents shown or given to Commission staff during *ex parte* meetings are deemed to be written *ex parte* presentations and must be filed consistent with § 1.1206(b). In proceedings governed by section 1.49(f) or for which the Commission has made available a method of electronic filing, written *ex parte* presentations and memoranda summarizing oral *ex parte* presentations, and all attachments thereto, must be filed through the electronic comment filing system available for that proceeding, and must be filed in their native format (*e.g.,* .doc, .xml, .ppt, searchable .pdf). Participants in this proceeding should familiarize themselves with the Commission's *ex parte* rules.

We note that our *ex parte* rules provide for a conditional exception for all *ex parte* presentations made by NTIA or Department of Defense representatives. This FNPRM raises significant technical issues implicating federal and non-federal spectrum allocations and users. Staff from NTIA, DoD, and the FCC have engaged in technical discussions in the development of this FNPRM, and we anticipate these discussions will continue after this FNPRM is released. These discussions will benefit from an open exchange of information between agencies, and may involve sensitive information regarding the strategic federal use of the 3.5 GHz Band. Recognizing the value of federal agency collaboration on the technical issues raised in this FNPRM, NTIA's shared jurisdiction over the 3.5 GHz Band, the importance of protecting federal users in the 3.5 GHz Band from interference, and the goal of enabling spectrum sharing to help address the ongoing spectrum capacity crunch, we find that this exemption serves the public interest.

B. Filing Requirements

Pursuant to §§ 1.415 and 1.419 of the Commission's rules, interested parties may file comments and reply comments on or before the dates indicated on the first page of this document. Comments may be filed using: (1) The Commission's Electronic Comment Filing System (ECFS), (2) the Federal Government's eRulemaking Portal, or (3) by filing paper copies.

- *Electronic Filers:* Comments may be filed electronically using the Internet by accessing the ECFS: *http://www.fcc.gov/cgb/ecfs/* or the Federal eRulemaking Portal: *http://www.regulations.gov.*
- *Paper Filers:* Parties who choose to file by paper must file an original and one copy of each filing. If more than one docket or rulemaking number appears in the caption of this proceeding, filers must submit two additional copies for each additional docket or rulemaking number.

Filings can be sent by hand or messenger delivery, by commercial overnight courier, or by first-class or overnight U.S. Postal Service mail. All filings must be addressed to the Commission's Secretary, Office of the Secretary, Federal Communications Commission.

○ All hand-delivered or messenger-delivered paper filings for the Commission's Secretary must be delivered to FCC Headquarters at 445 12th St. SW., Room TW–A325, Washington, DC 20554. All hand deliveries must be held together with rubber bands or fasteners. Any

envelopes must be disposed of before entering the building. The filing hours are 8:00 a.m. to 7:00 p.m.

○ Commercial overnight mail (other than U.S. Postal Service Express Mail and Priority Mail) must be sent to 9300 East Hampton Drive, Capitol Heights, MD 20743.

○ U.S. Postal Service first-class, Express, and Priority mail must be addressed to 445 12th Street SW., Washington, DC 20554.

Comments, reply comments, and *ex parte* submissions will be available for public inspection during regular business hours in the FCC Reference Center, Federal Communications Commission, 445 12th Street SW., CY–A257, Washington, DC 20554. These documents will also be available via ECFS. Documents will be available electronically in ASCII, Microsoft Word, and/or Adobe Acrobat.

To request information in accessible formats (Braille, large print, electronic files, audio format), send an email to *fcc504@fcc.gov* or call the FCC's Consumer and Governmental Affairs Bureau at (202) 418–0530 (voice), (202) 418–0432 (TTY). This document can also be downloaded in Word and Portable Document Format (PDF) at: *http://www.fcc.gov.*

C. Initial Regulatory Flexibility Analysis

As required by the Regulatory Flexibility Act of 1980 (RFA), the Commission prepared an Initial Regulatory Flexibility Analysis (IRFA) relating to the NPRM. No parties filed comments responding to that IRFA. We seek comment on how the proposed rules set forth herein could affect the IRFA. These comments must be filed in accordance with the same filing deadlines as comments filed in response to this FNPRM as set forth on the first page of this document and have a separate and distinct heading designating them as responses to the IRFA.

Our previous IRFA set forth the need for and objectives of our proposed rules; the legal basis for the proposed action; a description and estimate of the number of small entities to which the proposed rules would apply; a description of projected reporting, recordkeeping, and other compliance requirements for small entities; steps taken to minimize the significant economic impact on small entities and significant alternatives considered; and a statement that there are no federal rules that may duplicate, overlap, or conflict with the proposed rules. Those descriptions remain unchanged by our FNPRM, except that we now propose unrestricted eligibility for Priority Access use of the 3.5 GHz Band.

Our FNPRM does, however, provide greater detail on some of the specific reporting, recordkeeping, and other compliance requirements on which we are now seeking comment. For example, it proposes qualifications requirements, and requirements to designate whether users have selected common carrier status. It proposes specific requirements for interactions with the SAS. It would require devices to be interoperable across all frequencies from 3550 MHz to 3700 MHz. It proposes Exclusion Zones to ensure compatibility between incumbent federal operations and Citizens Broadband Radio Service users, application window procedures for PALs, and limits on the geographic areas, time periods, and numbers of PALs that may be acquired, as well as auction procedures that would govern mutually exclusive applications therefor. It proposes a 24 dBm (per 10 megahertz) peak transmit power limit for CBSDs in non-rural areas, and 30 dBm (per 10 megahertz) for rural areas. For fixed point-to-point radio systems, it proposes a 30 dBm (per 10 megahertz) peak transmit power limit. It proposes a maximum EIRP for End User Devices of 23 dBm (per 10 megahertz), and a −80 dBm signal level threshold as measured by a 0 dBi isotropic antenna in 10 megahertz anywhere along any PAL service area boundaries. It proposes OOBE of 43 + 10 log (P) dB, and 70 + 10 log (P) dB for emissions below 3520 MHz and above 3680 MHz. In the 3.5 GHz NPRM, the Commission also asked for comment on other alternatives, such as utilizing a two-tiered authorization framework, establishing a license-by-rule approach to Priority Access, and utilizing an alternative ''licensed light'' framework akin to the authorization model currently used for the 3650–3700 MHz band. This FNPRM also seeks comment on alternatives, including static rather than dynamic frequency assignments and prescribed GAA bandwidths.

D. Initial Paperwork Reduction Act Analysis

This FNPRM contains proposed new and modified information collection requirements. The Commission, as part of its continuing effort to reduce paperwork burdens, invites the general public and the Office of Management and Budget (OMB) to comment on the information collection requirements contained in this FNPRM, as required by the Paperwork Reduction Act of 1995, Public Law 104–13. In addition, pursuant to the Small Business Paperwork Relief Act of 2002, Public Law 107–198, we seek specific comment on how we might ''further reduce the information collection burden for small business concerns with fewer than 25 employees.''

List of Subjects

47 CFR Part 1

Administrative practice and procedure, Communications common carriers, Telecommunications.

47 CFR Part 2

Communications equipment, Telecommunications.

47 CFR Part 90

Business and industry

47 CFR Part 95

Radio

47 CFR Part 96

Citizens Broadband Radio Service, Telecommunications.

Federal Communications Commission.

Marlene H. Dortch,

Secretary.

For the reasons discussed in the preamble, the Federal Communications Commission proposes to amend 47 CFR parts 1, 2, 90, 95, and 96 as follows:

PART 1—PRACTICE AND PROCEDURE

■ 1. The authority citation for part 1 continues to read as follows:

Authority: 15 U.S.C. 79 et seq.; 47 U.S.C. 151, 154(i), 154(j), 155, 157, 225, 227, 303(r), 309, 1403, 1404, and 1451.

■ 2. Section 1.901 is revised to read as follows:

§ 1.901 Basis and purpose.

These rules are issued pursuant to the Communications Act of 1934, as amended, 47 U.S.C. 151 *et seq.* The purpose of these rules is to establish the requirements and conditions under which entities may be licensed in the Wireless Radio Services as described in this part and in parts 13, 20, 22, 24, 26, 27, 74, 80, 87, 90, 95, 96, 97 and 101 of this chapter.

■ 3. Section 1.902 is revised to read as follows:

§ 1.902 Scope.

In case of any conflict between the rules set forth in this subpart and the rules set forth in parts 13, 20, 22, 24, 26, 27, 74, 80, 87, 90, 95, 96, 97, and 101 of title 47, chapter I of the Code of Federal Regulations, the rules in part 1 shall govern.

■ 4. Section 1.907 is amended by revising the definitions for ''Private

Wireless Services,'' ''Wireless Radio Services,'' and ''Wireless Telecommunication Services'' to read as follows:

§ 1.907 Definitions.

* * * * *

Private Wireless Services. Wireless Radio Services authorized by parts 80, 87, 90, 95, 96, 97, and 101 that are not Wireless Telecommunications Services, as defined in this part.

* * * * *

Wireless Radio Services. All radio services authorized in parts 13, 20, 22, 24, 26, 27, 74, 80, 87, 90, 95, 96, 97 and 101 of this chapter, whether commercial or private in nature.

Wireless Telecommunications Services. Wireless Radio Services, whether fixed or mobile, that meet the definition of ''telecommunications service'' as defined by 47 U.S.C. 153, as amended, and are therefore subject to regulation on a common carrier basis. Wireless Telecommunications Services include all radio services authorized by parts 20, 22, 24, 26, and 27 of this chapter. In addition, Wireless Telecommunications Services include Public Coast Stations authorized by part 80 of this chapter, Commercial Mobile Radio Services authorized by part 90 of this chapter, and common carrier fixed microwave services, Local Television Transmission Service (LTTS), Local Multipoint Distribution Service (LMDS), and Digital Electronic Message Service (DEMS), authorized by part 101 of this chapter, and Citizens Broadband Radio Services authorized by part 96 of this chapter.

■ 5. Section 1.1307 is amended by revising paragraph (b)(2)(i) to read as follows:

§ 1.1307 Actions that may have a significant environmental effect, for which Environmental Assessments (EAs) must be prepared.

* * * * *

(b) * * *

(2)(i) Mobile and portable transmitting devices that operate in the Commercial Mobile Radio Services pursuant to part 20 of this chapter; the Cellular Radiotelephone Service pursuant to part 22 of this chapter; the Personal Communications Services (PCS) pursuant to part 24 of this chapter; the Satellite Communications Services pursuant to part 25 of this chapter; the Miscellaneous Wireless Communications Services pursuant to part 27 of this chapter; the Maritime Services (ship earth stations only) pursuant to part 80 of this chapter; the Specialized Mobile Radio Service, the 4.9 GHz Band Service, or the 3650 MHz Wireless Broadband Service pursuant to part 90 of this chapter; the Wireless Medical Telemetry Service (WMTS), or the Medical Device Radiocommunication Service (MedRadio) pursuant to part 95 of this chapter; or the Citizens Broadband Radio Service pursuant to part 96 of this chapter are subject to routine environmental evaluation for RF exposure prior to equipment authorization or use, as specified in §§ 2.1091 and 2.1093 of this chapter.

* * * * *

PART 2—FREQUENCY ALLOCATIONS AND RADIO TREATY MATTERS; GENERAL RULES AND REGULATIONS

■ 6. The authority citation for part 2 continues to read as follows:

Authority: 47 U.S.C. 154, 302a, 303, and 336, unless otherwise noted.

■ 7. Section 2.106, the Table of Frequency Allocations, is amended as follows:

■ a. Revise pages 39 and 40.

■ b. In the list of United States (US) Footnotes, add footnotes US105, US107, and US433.

The revisions and additions read as follows:

§ 2.106 Table of Frequency Allocations.

* * * * *

BILLING CODE 6712–01–P

International Table			United States Table		FCC Rule Part(s)
Region 1 Table	Region 2 Table	Region 3 Table	Federal Table	Non-Federal Table	
2655-2670 FIXED 5.410 MOBILE except aeronautical mobile 5.384A BROADCASTING-SATELLITE 5.208B 5.413 5.416 Earth exploration-satellite (passive) Radio astronomy Space research (passive) 5.149 5.412	2655-2670 FIXED 5.410 FIXED-SATELLITE (Earth-to-space) (space-to-Earth) 5.415 MOBILE except aeronautical mobile 5.384A BROADCASTING-SATELLITE 5.413 5.416 Earth exploration-satellite (passive) Radio astronomy Space research (passive) 5.149 5.208B	2655-2670 FIXED 5.410 FIXED-SATELLITE (Earth-to-space) 5.415 MOBILE except aeronautical mobile 5.384A BROADCASTING-SATELLITE 5.413 5.416 Earth exploration-satellite (passive) Radio astronomy Space research (passive) 5.149 5.208B 5.420	2655-2690 Earth exploration-satellite (passive) Radio astronomy US385 Space research (passive)	2655-2690 FIXED US205 MOBILE except aeronautical mobile Earth exploration-satellite (passive) Radio astronomy Space research (passive)	Wireless Communications (27)
2670-2690 FIXED 5.410 MOBILE except aeronautical mobile 5.384A Earth exploration-satellite (passive) Radio astronomy Space research (passive) 5.149 5.412	2670-2690 FIXED 5.410 FIXED-SATELLITE (Earth-to-space) (space-to-Earth) 5.208B 5.415 MOBILE except aeronautical mobile 5.384A Earth exploration-satellite (passive) Radio astronomy Space research (passive) 5.149	2670-2690 FIXED 5.410 FIXED-SATELLITE (Earth-to-space) 5.415 MOBILE except aeronautical mobile 5.384A MOBILE-SATELLITE (Earth-to-space) 5.351A 5.419 Earth exploration-satellite (passive) Radio astronomy Space research (passive) 5.149	US205	US385	
2690-2700 EARTH EXPLORATION-SATELLITE (passive) RADIO ASTRONOMY SPACE RESEARCH (passive) 5.340 5.422			2690-2700 EARTH EXPLORATION-SATELLITE (passive) RADIO ASTRONOMY US74 SPACE RESEARCH (passive) US246		
2700-2900 AERONAUTICAL RADIONAVIGATION 5.337 Radiolocation 5.423 5.424			2700-2900 METEOROLOGICAL AIDS AERONAUTICAL RADIONAVIGATION 5.337 US18 Radiolocation G2 5.423 G15	2700-2900 5.423 US18	Aviation (87)
2900-3100 RADIOLOCATION 5.424A RADIONAVIGATION 5.426 5.425 5.427			2900-3100 RADIOLOCATION 5.424A G56 MARITIME RADIONAVIGATION 5.427 US44 US316	2900-3100 MARITIME RADIONAVIGATION Radiolocation US44 5.427 US316	Maritime (80) Private Land Mobile (90)
3100-3300 RADIOLOCATION Earth exploration-satellite (active) Space research (active) 5.149 5.428			3100-3300 RADIOLOCATION G59 Earth exploration-satellite (active) Space research (active) US342	3100-3300 Earth exploration-satellite (active) Space research (active) Radiolocation US342	Private Land Mobile (90)
3300-3400 RADIOLOCATION	3300-3400 RADIOLOCATION Amateur Fixed Mobile	3300-3400 RADIOLOCATION Amateur	3300-3500 RADIOLOCATION US108 G2	3300-3500 Amateur Radiolocation US108	Private Land Mobile (90) Amateur Radio (97)

5.149 5.429 5.430	5.149	5.149 5.429			
3400-3600 FIXED FIXED-SATELLITE (space-to-Earth) Mobile 5.430A Radiolocation	3400-3500 FIXED FIXED-SATELLITE (space-to-Earth) Amateur Mobile 5.431A Radiolocation 5.433 5.282	3400-3500 FIXED FIXED-SATELLITE (space-to-Earth) Amateur Mobile 5.432B Radiolocation 5.433 5.282 5.432 5.432A	US342	5.282 US342	
5.431	3500-3700 FIXED FIXED-SATELLITE (space-to-Earth) MOBILE except aeronautical mobile Radiolocation 5.433	3500-3600 FIXED FIXED-SATELLITE (space-to-Earth) MOBILE except aeronautical mobile 5.433A Radiolocation 5.433	3500-3550 RADIOLOCATION G59 AERONAUTICAL RADIONAVI- GATION (ground-based) G110	3500-3550 Radiolocation	Private Land Mobile (90)
			3550-3650 RADIOLOCATION G59 AERONAUTICAL RADIONAVI- GATION (ground-based) G110 US106 US107 US245 US433	3550-3600 FIXED LAND MOBILE US106 US433	
3600-4200 FIXED FIXED-SATELLITE (space-to-Earth) Mobile		3600-3700 FIXED FIXED-SATELLITE (space-to-Earth) MOBILE except aeronautical mobile Radiolocation 5.433 5.435		3600-3650 FIXED FIXED-SATELLITE (space-to-Earth) US107 US245 LAND MOBILE US106 US433	Satellite Communications (25) Private Land Mobile (90)
			3650-3700 US109 US349	3650-3700 FIXED FIXED-SATELLITE (space-to-Earth) NG169 NG185 MOBILE except aeronautical mobile US109 US349	
	3700-4200 FIXED FIXED-SATELLITE (space-to-Earth) MOBILE except aeronautical mobile		3700-4200	3700-4200 FIXED FIXED-SATELLITE (space-to-Earth) NG180	Satellite Communications (25) Fixed Microwave (101)
4200-4400 AERONAUTICAL RADIONAVIGATION 5.438 5.439 5.440			4200-4400 AERONAUTICAL RADIONAVIGATION 5.440 US261		Aviation (87)
4400-4500 FIXED MOBILE 5.440A			4400-4500 FIXED MOBILE	4400-4500	
4500-4800 FIXED FIXED-SATELLITE (space-to-Earth) 5.441 MOBILE 5.440A			4500-4800 FIXED MOBILE US245	4500-4800 FIXED-SATELLITE (space-to-Earth) 5.441 US245	
4800-4990 FIXED MOBILE 5.440A 5.442 Radio astronomy			4800-4940 FIXED MOBILE US203 US342	4800-4940 US203 US342	
5.149 5.339 5.443			4940-4990 5.339 US342 US385 G122	4940-4990 FIXED MOBILE except aeronautical mobile 5.339 US342 US385	Public Safety Land Mobile (90Y) Page 40

BILLING CODE 6712–01–C

* * * * *

United States (US) Footnotes

* * * * *

US105 In the band 3550–3650 MHz, non-Federal stations in the radiolocation service that were licensed

or applied for prior to [effective date of Report and Order] may continue to operate on a secondary basis until the end of the equipment's useful lifetime.

US107 In the band 3600–3650 MHz, the following provisions shall apply to earth stations in the fixed-satellite service (space-to-Earth):

(a) Earth stations authorized prior to, or granted as a result of an application filed prior to, [effective date of Report and Order], and constructed within 12 months of initial authorization may operate indefinitely on a primary basis. Applications for new earth stations or modifications to earth station facilities shall not be accepted, except for changes in polarization, antenna orientation or ownership.

(b) The assignment of frequencies to new earth stations shall be authorized on secondary basis to non-Federal stations in the fixed and land mobile services.

* * * * *

US433 In the band 3550–3650 MHz, the following provisions shall apply to Federal use of the aeronautical radionavigation (ground-based) and radiolocation services and to non-Federal use of the fixed and land mobile services:

(a) Airborne radar systems shall not be authorized.

(b) Non-Federal stations in the fixed and land mobile services shall not be authorized within [XXX km] of the territorial sea baseline.

(c) Ground-based radar systems operate at the following fixed sites: [RESERVED]. Non-federal operations shall not be permitted within [XX km] of these fixed sites.

* * * * *

■ 8. Section 2.1091 is amended by revising paragraph (c)(1) introductory text to read as follows:

§ 2.1091 Radiofrequency radiation exposure evaluation: mobile devices.

* * * * *

(c)(1) Mobile devices that operate in the Commercial Mobile Radio Services pursuant to part 20 of this chapter; the Cellular Radiotelephone Service pursuant to part 22 of this chapter; the Personal Communications Services pursuant to part 24 of this chapter; the Satellite Communications Services pursuant to part 25 of this chapter; the Miscellaneous Wireless Communications Services pursuant to part 27 of this chapter; the Maritime Services (ship earth station devices only) pursuant to part 80 of this chapter; the Specialized Mobile Radio Service, and the 3650 MHz Wireless Broadband Service pursuant to part 90 of this chapter; and the Citizens Broadband Radio Service pursuant to part 96 of this chapter are subject to routine environmental evaluation for RF exposure prior to equipment authorization or use if:

* * * * *

■ 9. Section 2.1093 is amended by revising paragraph (c)(1) to read as follows:

§ 2.1093 Radiofrequency radiation exposure evaluation: portable devices.

* * * * *

(c)(1) Portable devices that operate in the Cellular Radiotelephone Service pursuant to part 22 of this chapter; the Personal Communications Service (PCS) pursuant to part 24 of this chapter; the Satellite Communications Services pursuant to part 25 of this chapter; the Miscellaneous Wireless Communications Services pursuant to part 27 of this chapter; the Maritime Services (ship earth station devices only) pursuant to part 80 of this chapter; the Specialized Mobile Radio Service, the 4.9 GHz Band Service, and the 3650 MHz Wireless Broadband Service pursuant to part 90 of this chapter; the Wireless Medical Telemetry Service (WMTS) and the Medical Device Radiocommunication Service (MedRadio), pursuant to subparts H and I of part 95 of this chapter, respectively, unlicensed personal communication service, unlicensed NII devices and millimeter wave devices authorized under §§ 15.253(f), 15.255(g), 15.257(g), 15.319(i), and 15.407(f) of this chapter; and the Citizens Broadband Radio Service pursuant to part 96 of this chapter are subject to routine environmental evaluation for RF exposure prior to equipment authorization or use.

* * * * *

PART 90—PRIVATE LAND MOBILE RADIO SERVICES

■ 10. The authority citation for part 90 continues to read as follows:

Authority: Sections 4(i), 11, 303(g), 303(r), and 332(c)(7) of the Communications Act of 1934, as amended, 47 U.S.C. 154(i), 161, 303(g), 303(r), 332(c)(7), and Title VI of the Middle Class Tax Relief and Job Creation Act of 2012, Pub. L. 112–96, 126 Stat. 156.

■ 11. Section 90.103 is amended by revising the ''3500 to 3650'' entry in the Megahertz portion of the Radiolocation Service Frequency Table in paragraph (b) to read as follows:

§ 90.103 Radiolocation Service

* * * * *

RADIOLOCATION SERVICE FREQUENCY TABLE

Frequency or band	Class of station(s)	Limitation
* * * * * * *		
Megahertz		
* * * * * * *		
3500 to 3550	do	12
* * * * * * *		

* * * * *

PART 95—PERSONAL RADIO SERVICES

■ 9. The authority citation for part 95 continues to read as follows:

Authority: Secs. 4, 303, 48 Stat. 1066, 1082, as amended; 47 U.S.C. 154, 303.

■ 10. Section 95.401 is amended by adding paragraph (h) to read as follows:

§ 95.401 (CB Rule 1) What are Citizens Band Radio Services?

* * * * *

(h) *Citizens Broadband Radio Service.* The rules for this service, including technical rules, are contained in part 96 of the Commission's rules. Only

Citizens Broadband Radio Service Devices authorized on a General Authorized Access basis, as those terms are defined in § 96.3, are considered part of the Citizens Band Radio Services.

■ 11. Section 95.601 is revised to read as follows:

§ 95.601 Basis and purpose.

This section provides the technical standards to which each transmitter (apparatus that converts electrical energy received from a source into RF (radio frequency) energy capable of being radiated) used or intended to be used in a station authorized in any of the Personal Radio Services listed in paragraphs (a) through (i) of this section must comply. This section also provides requirements for obtaining certification for such transmitters. The Personal Radio Services to which these rules apply are:

(a) The GMRS (General Mobile Radio Service)—subpart A;

(b) The Family Radio Service (FRS)—subpart B;

(c) The R/C (Radio Control Radio Service)—subpart C;

(d) The CB (Citizens Band Radio Service)—subpart D;

(e) The Low Power Radio Service (LPRS)—subpart G;

(f) The Wireless Medical Telemetry Service (WMTS)—subpart H;

(g) The Medical Device Radiocommunication Service (MedRadio)—subpart I;

(h) The Multi-Use Radio Service (MURS)—subpart J; and

(i) Dedicated Short-Range Communications Service On-Board Units (DSRCS–OBUs)—subpart L.

■ 12. Add part 96 to read as follows:

PART 96—CITIZENS BROADBAND RADIO SERVICE

Subpart A—General Rules

Sec.
96.1 Scope
96.3 Definitions
96.5 Eligibility
96.7 Authorization required
96.9 Regulatory status
96.11 Frequencies
96.13 Frequency assignments

Subpart B—Incumbent Protection

96.15 Protection of Federal Incumbents
96.17 Protection of existing Fixed Satellite Service (FSS) Earth Stations in the 3550–3650 MHz Band
96.19 Operation near Canadian and Mexican Borders

Subpart C—Priority Access

96.21 Authorization
96.23 Priority access licenses
96.25 Application window
96.27 Competitive bidding procedures
96.29 Aggregation of priority access licenses

Subpart D—General Authorized Access

96.31 Authorization
96.33 General authorized access use
96.35 Contained Access Facilities (CAFs)

Subpart E—Technical Rules

96.36 Citizens Broadband Radio Service Device (CBSD) general requirements
96.37 End user general requirements
96.38 General radio requirements
96.39 Equipment authorization
96.41 RF safety

Subpart F—Spectrum Access System

96.43 Spectrum access system purposes and functionality
96.44 Information gathering and retention
96.45 Registration and authorization of Citizens Broadband Radio Service Devices
96.46 Frequency assignment
96.47 Security
96.48 Spectrum access system administrators
96.49 Spectrum access system administrator fees

Authority: Sections 4(i), 303, and 307 of the Communications Act of 1934, as amended, 47 U.S.C. 154(i), 303, and 307.

Subpart A—General Rules

§ 96.1 Scope.

(a) This section sets forth the regulations governing use of devices in the Citizens Broadband Radio Service. Citizens Broadband Radio Service Devices (CBSDs) may be used in the frequency bands listed in § 96.11. The operation of all CBSDs shall be coordinated by one or more authorized Spectrum Access Systems (SASs).

(b) The Citizens Broadband Radio Service includes Priority Access and General Authorized Access tiers of service. Priority Access Licensees and General Authorized Access Users shall be authorized to operate only outside of the Exclusion Zones detailed in § 96.15 and must not cause harmful interference to Incumbent Users, including authorized federal users and the fixed satellite service (FSS) sites set forth in §§ 96.15 and 96.17. General Authorized Access Users must not cause harmful interference to Priority Access Licensees and must accept interference from Priority Access Licensees, consistent with § 96.33.

§ 96.3 Definitions.

Census tract: Census tracts are relatively permanent statistical subdivisions of a county or equivalent entity that are updated by local participants prior to each decennial census as part of the Census Bureau's Participant Statistical Areas Program. Census tracts are defined by the United States Census Bureau and current census tract maps can be found at *https://www.census.gov/geo/maps-data/maps/2010tract.html.*

Citizens Broadband Radio Service Device (CBSD): Fixed or Portable Base stations, or networks of such base stations, that operate on a Priority Access or General Authorized Access basis in the Citizens Broadband Radio Service consistent with this rule part. Does not include End User Devices.

Contained Access Facility (CAF): An indoor or otherwise physically contained location used by Contained Access Users for the express purpose of performing core mission operations.

Contained access use: Private internal radio services, not made commercially available to the public, employed by Contained Access Users.

Contained access user: Qualified government and non-government entities entitled to protection within CAFs in furtherance of a mission that supports the public interest.

End user device: A fixed, portable, or mobile device authorized and controlled by an authorized CBSD. These devices may not be used as intermediate service links or to provide service to other End User Devices.

Exclusion zone: A geographic area wherein no CBSD shall operate. Exclusion Zones shall be enforced and maintained by the SAS.

Fast track report: National Telecommunications and Information Administration, ''An Assessment of the Near-Term Viability of Accommodating Wireless Broadband Systems in the 1675–1710 MHz, 1755–1780 MHz, 3500–3650 MHz, 4200–4220 MHz, and 4380–4400 MHz Bands'' (October 2010).

General authorized access user: An authorized user of CBSDs operating on a General Authorized Access basis, as set forth in this part.

Geo-location capability: The capability of a CBSD to determine its geographic coordinates within the level of accuracy specified in § 96.36 (*i.e.,* 50 meters horizontally and 3 meters vertically). This capability is used by a SAS to determine frequency availability and maximum power limits for CBSDs.

Incumbent user: A federal entity or fixed satellite service operator authorized to operate on a primary basis on frequencies designated in § 96.11.

Priority Access License (PAL): A license to operate on a Priority Access basis, consistent with § 96.21, *et seq.*

Priority Access Licensee: A holder of one or more PALs. Priority Access Licensees shall be entitled to protection from harmful interference from General Authorized Access Users and other

Priority Access Licensees within the defined limits of their PAL, consistent with the rules set forth in this part.

Rural area: For purposes of this part, a Rural Area is defined as a county (or equivalent) with a population density of 100 persons per square mile or less, based upon the most recently available Census data.

Spectrum Access System (SAS): A system that maintains records of all authorized services and devices in the Citizens Broadband Radio Service frequency bands, is capable of determining the available channels at a specific geographic location, provides information on available channels to CBSDs that have been certified under the Commission's equipment authorization procedures, determines and enforces maximum power levels for CBSDs, and enforces protection criteria for Incumbent Users and Priority Access Licensees, and performs other functions as set forth in § 96.43, *et seq.* Spectrum Access System shall also refer to multiple Spectrum Access Systems operating in coordination and in accordance with this rule part.

SAS Administrator: An entity authorized by the Commission to operate an SAS in accordance with the rules and procedures set forth in § 96.48.

§ 96.5 Eligibility.

Any entity, other than those precluded by section 310 of the Communications Act of 1934, as amended, 47 U.S.C. 310, is eligible to be a Priority Access Licensee or General Authorized Access User under this part, except as set forth in § 96.35.

§ 96.7 Authorization required.

(a) CBSDs must be used and operated consistent with the rules in this part.

(b) Authorizations for PALs may be granted upon proper application, provided that the applicant is qualified in regard to citizenship, character, financial, technical and other criteria established by the Commission, and that the public interest, convenience and necessity will be served. See 47 U.S.C. 301, 308, 309, and 310. The holding of an authorization does not create any rights beyond the terms, conditions, and period specified in the authorization and shall be subject to the provisions of the Communications Act of 1934, as amended.

§ 96.9 Regulatory status.

Priority Access Licensees and General Authorized Access Users are permitted to provide services on a non-common carrier and/or on a common carrier basis. An authorized Citizens Broadband Radio Service user may render any kind of communications service consistent with the regulatory status in its authorization and with the Commission's rules applicable to that service.

§ 96.11 Frequencies.

The Citizens Broadband Radio Service shall be authorized in the 3550–3650 MHz frequency band.

§ 96.13 Frequency assignments.

(a) A minimum of fifty percent of the bandwidth, rounded to the nearest 10 megahertz, available for Citizens Broadband Radio Service users in a given census tract must be reserved for General Authorized Access use. The remaining bandwidth shall be made available to Priority Access Licensees, consistent with the procedures in subpart C of this rule part.

(b) Each PAL shall be authorized to use a 10 megahertz channel as set forth in § 96.23.

(c) Any frequencies designated for Priority Access that are not in use by a Priority Access Licensee may be utilized by General Authorized Access Users.

(d) The SAS shall assign particular authorized users to specific frequencies, which may be reassigned by the SAS.

Subpart B—Incumbent Protection

§ 96.15 Protection of Federal Incumbents.

(a) CBSDs must not cause harmful interference to and must accept harmful interference from federal users authorized to operate on frequencies set forth in § 96.11.

(1) To ensure compatibility between incumbent federal operations and Citizens Broadband Radio Service user, an Exclusion Zone consistent with the recommendations of the Fast Track Report shall be maintained around terrestrial federal radiolocation sites and the coastline. This Exclusion Zone shall be enforced by the SAS.

(2) The SAS must immediately suspend operation of any CBSDs found to be causing harmful interference to Incumbent Users until such harmful interference can be resolved.

(b) [Reserved]

§ 96.17 Protection of existing FSS Earth Stations in the 3550–3650 MHz band.

(a) CBSDs shall not cause harmful interference to the FSS earth stations listed in the chart:

Earth station No.	State	City	Call sign	Coordinates
1	CA	Livermore	KA232	37°45′40.0″ N, 121°47′53.0″ W
2	CA	Malibu	E980066	34°04′52.6″ N, 118°53′52.9″ W
			KA273	34°04′50.3″ N, 118°53′46.4″ W
			KA91	34°04′49.7″ N, 118°53′43.9″ W
			KB32	34°04′51.0″ N, 118°53′44.0″ W
3	CA	Mountain Home	KA86	37°45′01.7″ N, 121°35′38.8″ W
4	CA	Napa	E950307	38°14′43.7″ N, 122°16′50.9″ W
5	CA	Nuevo	E010206	33°47′46.1″ N, 117°05′15.1″ W
			E020169	33°47′46.5″ N, 117°05′15.0″ W
			E020314	33°47′46.0″ N, 117°05′14.0″ W
			E020315	33°47′45.0″ N, 117°05′15.0″ W
6	CA	Salt Creek	KA371	38°56′20.2″ N, 122°08′48.0″ W
			KA372	38°56′21.0″ N, 122°08′49.2″ W
			KA373	38°56′22.3″ N, 122°08′49.6″ W
7	CA	San Ramon	E6241	37°45′39.7″ N, 121°47′56.8″ W
8	CA	Santa Paula	KA31	34°24′05.0″ N, 119°04′26.0″ W
			KB34	34°24′05.0″ N, 119°04′29.4″ W
			KA249	34°24′05.0″ N, 119°04′29.4″ W
			E980136	34°24′06.0″ N, 119°04′21.8″ W
9	CA	Somis	KA318	34°19′31.0″ N, 118°59′41.0″ W
10	CA	Sylmar	KA274	34°19′04.0″ N, 118°29′00.0″ W
			E6148	34°18′55.0″ N, 118°29′12.0″ W
11	CT	Southbury	KA312	41°27′06.3″ N, 073°17′21.4″ W
			KA313	41°27′06.3″ N, 073°17′16.4″ W

Earth station No.	State	City	Call sign	Coordinates
			WA28	41°27′05.0″ N, 073°17′21.0″ W
			WB36	41°27′05.3″ N, 073°17′19.4″ W
			WB36	41°27′05.1″ N, 073°17′19.0″ W
12	FL	Medley	E960068	25°51′19.0″ N, 080°19′52.0″ W
13	FL	Miami	KA407	25°48′35.0″ N, 080°21′10.0″ W
			KA412	25°48′35.0″ N, 080°21′11.0″ W
14	GUM	Pulantat	KA28	13°25′00.0″ N, 144°44′57.0″ E
15	GUM	Yonagu	KA326	13°25′05.2″ N, 144°45′05.7″ E
16	HI	Haleiwa	E080059	21°40′10.4″ N, 158°01′59.4″ W
			KA25	21°40′14.6″ N, 158°02′03.1″ W
17	HI	Kapolei	E010016	21°20′08.0″ N, 158°05′25.0″ W
			E980250	21°20′12.6″ N, 158°05′21.1″ W
			E100091	21°20′10.2″ N, 158°05′18.0″ W
			E030087	21°20′09.0″ N, 158°05′25.0″ W
18	HI	Paumalu	KA265	21°40′27.0″ N, 158°02′16.0″ W
			KA266	21°40′15.5″ N, 158°02′06.1″ W
			KA267	21°40′14.1″ N, 158°02′06.1″ W
			KA270	21°40′24.0″ N, 158°02′16.0″ W
19	MD	Clarksburg	KA260	39°13′05.0″ N, 077°16′12.0″ W
			KA275	39°13′07.0″ N, 077°16′12.0″ W
			KA259	39°13′05.6″ N, 077°16′12.4″ W
			KA263	39°13′04.4″ N, 077°16′13.9″ W
			KA264	39°13′05.2″ N, 077°16′13.9″ W
20	MD	Hagerstown	KA262	39°35′57.0″ N, 077°45′23.0″ W
			E030071	39°35′57.9″ N, 077°45′17.3″ W
			E030082	39°35′57.9″ N, 077°45′21.4″ W
			E030100	39°35′59.6″ N, 077°45′21.4″ W
			E030101	39°35′59.6″ N, 077°45′17.4″ W
			E030103	39°35′59.1″ N, 077°45′18.4″ W
			E000296	39°35′54.0″ N, 077°45′35.0″ W
			KA261	39°35′57.0″ N, 077°45′22.0″ W
			E100118	39°35′55.0″ N, 077°45′22.0″ W
21	ME	Andover	E000700	44°38′01.2″ N, 070°41′51.3″ W
			KA386	44°37′58.2″ N, 070°41′55.3″ W
			KA349	44°37′58.2″ N, 070°41′54.0″ W
22	NJ	Franklin	E6777	41°07′04.0″ N, 074°34′33.0″ W
23	NY	Hauppauge	E950436	40°49′15.4″ N, 073°15′48.4″ W
24	PA	Catawissa	E980493	40°53′39.3″ N, 076°26′19.8″ W
25	PA	Roaring Creek	KA444	40°53′35.9″ N, 076°26′22.6″ W
			WA33	40°53′37.5″ N, 076°26′21.8″ W
26	PR	Humacao	E872647	18°09′05.0″ N, 065°47′20.0″ W
27	PR	San Juan	E050314	18°24′23.9″ N, 066°01′46.6″ W
28	TN	Nashville	E960050	36°14′05.7″ N, 086°45′21.4″ W
			E960073	36°14′05.7″ N, 086°45′19.4″ W
			E970010	36°14′06.2″ N, 086°45′20.4″ W
29	VA	Alexandria	KA81	38°47′36.0″ N, 077°09′59.0″ W
			E970267	38°47′38.0″ N, 077°09′46.0″ W
30	VA	Bristow	E000696	38°47′02.4″ N, 077°34′21.9″ W
			E000152	38°47′01.6″ N, 077°34′24.3″ W
			E000726	various
31	VA	Sterling	E030336	38°59′07.0″ N, 077°26′45.0″ W
32	VA	Quicksburg	E000589	38°43′45.4″ N, 078°39′25.1″ W
			E990175	38°43′45.4″ N, 078°39′24.2″ W
33	WA	Brewster	KA294	48°08′50.5″ N, 119°41′33.2″ W
			E960222	48°08′51.0″ N, 119°41′29.0″ W
			E120128	48°08′50.0″ N, 119°41′28.0″ W
34	WA	Yacolt	KA221	45°51′46.4″ N, 122°23′44.3″ W
			KA323	45°51′45.5″ N, 122°23′43.8″ W
35	WV	Albright	KA413	39°34′07.0″ N, 079°34′45.0″ W
36	WV	Etam	KA378	39°16′50.0″ N, 079°44′13.0″ W
			WA21	39°16′48.0″ N, 079°44′14.0″ W
37	WV	Rowlesburg	KA351	39°16′52.1″ N, 079°44′10.7″ W

(1) These operational restrictions shall be enforced by the Spectrum Access System authorized pursuant to § 96.48.

(2) These protection criteria shall only apply to FSS earth stations that are in actual use. FSS earth station licensees must inform SAS Administrators of their operational status annually, no later than 30 days before the end of the preceding calendar year.

(3) CBSDs may operate within areas that may cause harmful interference to FSS earth stations listed in this section provided that the licensee of the FSS earth station and an SAS Administrator mutually agree on such operation and the terms of any such agreement are provided to SAS and can be enforced by the SAS.

(b) [Reserved.]

§ 96.19 Operation near Canadian and Mexican borders.

Citizens Broadband Radio Service operation in the 3550–3650 MHz band is subject to current and future international agreements with Mexico and Canada. The terms of these agreements shall be enforced by the SAS.

Subpart C—Priority Access

§ 96.21 Authorization.

(a) In general, applications for PALs must:

(1) Demonstrate the applicant's qualifications to hold an authorization;

(2) State how a grant would serve the public interest, convenience, and necessity;

(3) Contain all information required by FCC rules and application forms;

(4) Propose operation of a facility or facilities in compliance with all rules governing the Citizens Broadband Radio Service; and

(5) Be amended as necessary to remain substantially accurate and complete in all significant respects, in accordance with the provisions of § 1.65 of this chapter.

(b) Authorization processes and requirements may be reasonably automated by SAS Administrators approved by the Commission in accordance with § 96.48. The Commission shall oversee these processes consistent with its responsibilities under the Communications Act of 1934, as amended.

(c) CBSDs used for Priority Access must register with the SAS and comply with its instructions consistent with § 96.36.

§ 96.23 Priority access licenses.

(a) Frequencies shall be made available for Priority Access use, consistent with § 96.13.

(b) Priority Access Licensees shall be protected from harmful interference from CBSDs operated by other Priority Access Licensees and General Authorized Access Users, consistent with the technical rules and interference avoidance criteria set forth in §§ 96.36 and 96.38. Priority Access Licensees must protect Incumbent Users from harmful interference, consistent with §§ 96.15 and 96.17.

(c) PALs shall have the following parameters:

(1) *Geography:* Each PAL shall consist of a single census tract, as defined in the 2010 census.

(i) *Contiguous Geographic Areas:* The SAS shall make reasonable efforts to assign geographically contiguous PALs held by the same licensee to the same frequencies.

(ii) [Reserved.]

(2) *Channels:* Each PAL shall consist of a 10 megahertz channel within the frequency range set forth in § 96.13. Channels shall be assigned by the SAS and the exact frequencies of specific assigned channels may be changed at the SAS Administrator's discretion, in coordination with other SAS Administrators. Priority Access Licensees may request a particular channel or frequency range but will not be guaranteed a particular assignment.

(i) *Contiguous Channel Frequencies:* The SAS shall make reasonable efforts to assign multiple channels held by the same Priority Access Licensee to contiguous frequencies.

(ii) [Reserved.]

(3) *License Term:* Each PAL shall be issued for one year. Each PAL shall automatically terminate at the end of its one-year term and may not be renewed. However, Priority Access Licensees may reapply for subsequent authorizations in the same census tract, subject to the limitations set forth in § 96.25. Priority Access Licensees may hold consecutive PALs up to the maximum established in § 96.25.

(d) CBSDs operating under a PAL authorization must register with an SAS and comply with its instructions in accordance with §§ 96.36, 96.45, and 96.46.

(e) Unused PAL channels shall be made available for assignment by the SAS for General Authorized Access use provided:

(1) General Authorized Access operation on unused PAL channels must obey the same field strength limits established in § 96.38 with respect to any operational areas within the PAL assignment; and

(2) Generally Authorized Access Users shall have no expectation of interference protection from any other users and shall operate on a non-interfering basis with respect to Priority Access Licensees and Incumbent Users, consistent with §§ 96.15, 96.17, and 96.23.

§ 96.25 Application window.

(a) Applications for PALs will be accepted annually. The annual application window and application process will be announced by the Wireless Telecommunications Bureau via public notice.

(b) The Wireless Telecommunications Bureau may make up to five consecutive years of any PAL available through the same application window. Applicants may apply for PALs up to five years in advance of the effective license date.

§ 96.27 Competitive bidding procedures.

Mutually exclusive initial applications for PALs are subject to competitive bidding. The general competitive bidding procedures set forth in part 1, subpart Q of this chapter will apply unless otherwise provided in this subpart.

§ 96.29 Aggregation of priority access licenses.

Priority Access Licensees may aggregate up to three channels in any single census tract.

Subpart D—General Authorized Access

§ 96.31 Authorization.

(a) Any party meeting the eligibility requirements set forth in § 96.5 is authorized to operate a CBSD on a General Authorized Access basis by this rule without an individual station license.

(b) CBSDs used for General Authorized Access must register with the SAS and comply with its instructions consistent with §§ 96.36, 96.45, and 96.46.

§ 96.33 General authorized access use.

(a) Frequencies shall be made available for General Authorized Access use consistent with the § 96.13.

(b) General Authorized Access Users shall be permitted to utilize frequencies assigned to PALs when such frequencies are not in use, as determined by the SAS.

(c) Frequencies that are available for General Authorized Access Use shall be made available on a shared basis and shall not be assigned for the exclusive use of any party.

(d) General Authorized Access Users shall have no expectation of interference protection from other General Authorized Access Users and shall avoid causing harmful interference to Priority Access Licensees and Incumbent Users, consistent with §§ 96.15, 96.17, and 96.23.

§ 96.35 Contained Access Facilities (CAFs).

(a) Commission approved Contained Access Users may request an assignment of up to 20 megahertz of frequencies reserved for GAA use from the SAS to be reserved for Contained Access Use inside a CAF.

(1) The requestor must certify to the SAS that it will use the reserved frequencies for Contained Access Use within each specifically requested location.

(2) [Reserved.]

(b) Such reserved frequencies shall not be available for use by other General

Authorized Access Users within the physical confines of the CAF, provided:

(1) The requestor undertakes reasonable efforts to safeguard against harmful interference from General Authorized Access transmissions originating outside the CAF; and

(2) All other rules applicable to General Authorized Access Users apply to CAF use of the reserved frequencies, including, but not limited to the requirements that that there shall be no expectation of interference protection from other General Authorized Access Users and that CAF users shall not cause harmful interference to Priority Access Licensees and Incumbent Users, consistent with §§ 96.15, 96.17, and 96.23.

Subpart E—Technical Rules

§ 96.36 Citizens Broadband Radio Service Device (CBSD) general requirements.

(a) *Geo-location and reporting capability.* (1) The CBSD shall be able to determine its geographic coordinates (referenced to the North American Datum of 1983 (NAD83)) to an accuracy of ±50 meters horizontal and ±3 meters elevation. Such geographic coordinates shall be reported to SAS at the time of first activation from a power-off condition.

(2) A CBSD must re-establish its position and report that position within 60 seconds to the SAS each time it is activated from a power-off condition.

(3) A CBSD must check its location at least once every 60 seconds while in operation and report to SAS any location changes exceeding ±50 meters horizontal and ±3 meters elevation within 60 seconds of such location change.

(b) *Interoperability.* All CBSDs must be capable of operating on any frequency from 3550–3700 MHz as instructed by the SAS.

(c) *Registration with SAS.* A CBSD must register with and be authorized by an SAS prior to its initial service transmission. The CBSD shall provide the SAS with its geographic location, antenna height above ground level (meters), requested authorization status (Priority Access or General Authorized Access), unique FCC identification number, and unique serial number. If any of this information changes, the CBSD shall update the SAS within 60 seconds. A CBSD shall only operate at or below the maximum power level and within locations/areas permitted by the SAS on the frequencies authorized by the SAS.

(1) A CBSD must query the SAS regarding frequency availability at 10 minute intervals and it must also receive any incoming commands from the SAS about any changes to power limits and frequency availabilities. CBSD operation must cease within 60 seconds if the SAS indicates that an assigned frequency is no longer available or as otherwise instructed by the SAS.

(2) [Reserved.]

(d) *Interference reporting.* CBSDs shall report to an SAS if they experience interference in exceeding a threshold as set by an SAS. Such interference reporting may be based on received interference signal strength in the same and adjacent channels, packet error rates or other common standard metrics as set by SAS.

(e) *Security.* CBSDs shall incorporate adequate security measures sufficient to ensure that they are capable of communicating with respect to lists of available frequencies only with SASs operated by approved SAS Administrators, and that communications between CBSDs and SASs, between individual CBSDs, and between CBSDs and mobile devices are secure to prevent corruption or unauthorized interception of data.

(1) For purposes of obtaining operational limits and availabilities and their updates, CBSDs shall only contact SASs operated by SAS Administrators approved by the Commission in accordance with § 96.48.

(2) All communications between CBSDs and SASs are to be transmitted using secure methods that protect the systems from corruption or unauthorized modification of the data.

(3) Communications between a CBSD and all End User Devices for purposes of obtaining operational power and frequency assignments shall employ secure methods that protect the system from corruption or unauthorized modification of the data.

(4) An SAS shall be protected from unauthorized data input or alteration of stored data. To provide this protection, the SAS Administrator shall establish communications authentication procedures sufficient to ensure that the data that the CBSDs receive is from an authorized source.

(f) *Device security.* All CBSDs and End User Devices must contain security features sufficient to protect against modification of software by unauthorized parties. Applications for certification of CBSDs and End User Devices must include an operational description of the technologies and measures that are incorporated in the device to comply with the security requirements of this section. In addition, applications for certification of CBSDs and End User Devices must identify at least one of the SAS databases operated by a designated SAS database administrator that the device will access for channel/frequency availability and affirm that the device will conform to the communications security methods used by such databases.

(g) *Airborne operations.* Airborne operations by CBSDS and End User Devices are prohibited.

§ 96.37 End user devices general requirements.

Mobile, portable or fixed End User Devices may operate only if they can positively receive and decode an authorization signal transmitted by a CBSD, including the frequency channels and power limits for their operation.

§ 96.38 General radio requirements.

The requirements in this section apply to CBSDs and their associated End User Devices, unless otherwise specified.

(a) *Digital modulation.* Systems operating in the Citizens Broadband Radio Service must use digital modulation techniques.

(b) *Conducted and emitted power limits.* Unless otherwise specified in this subsection, the maximum conducted output power, maximum transmit antenna gain, maximum Equivalent Isotropically Radiated Power (EIRP), and maximum Power Spectral Density (PSD) of any CBSD and End User Device must comply with the limits shown in the table below:

		Maximum conducted output power (dBm/10 megahertz)**	Maximum EIRP (dBm/10 megahertz)	Maximum conducted PSD (dBm/MHz)
End User Device	All	n/a	23	n/a
CBSD	Baseline*	24	30	14
CBSD	Rural Areas	30	47	20

		Maximum conducted output power (dBm/10 megahertz)**	Maximum EIRP (dBm/10 megahertz)	Maximum conducted PSD (dBm/MHz)
CBSD	Fixed Point to Point System (PTP)	30	53	20

* Baseline is all cases not qualified under rural or fixed PTP.
** Maximum Conducted Output Power (as defined in paragraph (b)(4) of this section).

(1) For fixed point-to-point radio systems, the maximum conducted output power in paragraph (b) of this section must be reduced by 1 dB for every 1 dB that the directional gain of the antenna exceeds 23dBi.

(2) CBSDs shall limit their operating power to the minimum necessary for successful operations.

(3) CBSDs shall include transmit power control capability and the capability to adjust maximum EIRP in response to instructions from an SAS (either directly or through an intermediary system). Applicants for PAL or General Authorized Access use of the band must include a description of these two functionalities for all CBSDs and End User Devices.

(4) Maximum Conducted Output Power is defined as the total transmit power delivered to all antennas and antenna elements averaged across all symbols in the signaling alphabet when the transmitter is operating at its maximum power control level. Power must be summed across all antennas and antenna elements. The average must not include any time intervals during which the transmitter is off or is transmitting at a reduced power level. If multiple modes of operation are possible (*e.g.,* alternative modulation methods), the maximum conducted output power is the highest total transmit power occurring in any mode.

(c) *Received signal strength limits.* CBSD transmissions shall be managed such that the median signal strength at any location on the boundary of a co-channel PAL shall not exceed −80 dbm as measured by a 0 dBi isotropic antenna in 10 megahertz unless the affected licensees or incumbents agree to a different field strength and communicate that to SAS.

(d) *3.5 GHz emissions and interference limits*—(1) *General protection levels.* Except as otherwise specified, for channel and frequency assignments made by the SAS to CBSDs operating in the 3550–3650 MHz band, the power of any emission outside the fundamental emission (whether in or outside of the authorized band) shall be attenuated below the transmitter power (P) by at least $43 + 10 \log_{10}(P)$ dB.

(2) *Additional protection levels.* Notwithstanding the foregoing paragraph (d)(1) of this section, the power of any emissions below 3520 MHz and above 3680 MHz shall be attenuated below the transmitter power (P) in watts by at least $70 + 10 \log_{10}(P)$ dB.

(3) *Measurement procedure.* (i) Compliance with this provision is based on the use of measurement instrumentation employing a resolution bandwidth of 1 megahertz or greater. However, in the 1 megahertz bands immediately outside and adjacent to the licensee's authorized frequency channel, a resolution bandwidth of no less than one percent of the fundamental emission bandwidth may be employed. A narrower resolution bandwidth is permitted in all cases to improve measurement accuracy provided the measured power is integrated over the full reference bandwidth (*i.e.,* 1 MHz or 1 percent of emission bandwidth, as specified). The emission bandwidth is defined as the width of the signal between two points, one below the carrier center frequency and one above the carrier center frequency, outside of which all emissions are attenuated at least 26 dB below the transmitter power.

(ii) When measuring unwanted emissions to demonstrate compliance with the limits, the CBSD and End User Device nominal carrier frequency/channel shall be adjusted as close to the licensee's authorized frequency block edges, both upper and lower, as the design permits.

(iii) Emission power measurements shall be performed with a peak detector in maximum hold.

(4) When an emission outside of the authorized bandwidth causes harmful interference, the Commission may, at its discretion, require greater attenuation than specified in this section.

(e) *Reception Limits.* (1) Priority Access Licensees must accept adjacent channel and in-band blocking interference (emissions from other Priority Access users transmitting between 3550 and 3650 MHz) up to a power spectral density level not to exceed −30dBm/10 megahertz with greater than 99% probability, unless the affected licensees agree to a higher or lower power spectral density limit and communicate with the terms of such agreement to the SAS.

(2) General Authorized Access operations are subject to the conditions that they cause no harmful interference to Incumbent Users or Priority Access Licensees and they can claim no protection from interference received from Incumbent Users or Priority Access Licensees. The operator of a General Authorized Access CBSD shall be required to cease operating the device upon notification by a SAS that the device is causing harmful interference. Operation shall not resume until the condition causing the harmful interference has been corrected.

(3) PA and GAA Licensees must accept interference in authorized areas of operation from federal radar systems up to a peak field strength level of 180 dBuV/m.

§ 96.39 Equipment authorization.

(a) Each CBSD or End User Device utilized for operation under this part and each transmitter marketed as set forth in § 2.803 of this chapter must be of a type which has been certificated for use under this part.

(b) Any manufacturer of radio transmitting equipment to be used in these services must request equipment authorization following the procedures set forth in subpart J of part 2 of this chapter. Equipment authorization for an individual transmitter may be requested by an applicant for a station authorization by following the procedures set forth in part 2 of this chapter.

§ 96.41 RF safety.

Licensees and manufacturers are subject to the radio frequency radiation exposure requirements specified in §§ 1.1307(b), 1.1310, 2.1091, and 2.1093 of this chapter, as appropriate. Applications for equipment authorization of mobile or portable devices operating under this section must contain a statement confirming compliance with these requirements for both fundamental emissions and unwanted emissions. Technical information showing the basis for this statement must be submitted to the Commission upon request.

Subpart F—Spectrum Access System

§ 96.43 Spectrum access system purposes and functionality.

The SAS serves the following purposes:

(a) To determine and provide to CBSDs the available channels/frequencies at their location;

(b) To determine the maximum permissible transmission power level available to CBSDs at a given location and communicate that information to the CBSDs;

(c) To register the identification information and location of CBSDs;

(d) To retain information on and enforce Exclusion Zones in accordance with §§ 96.15 and 96.17;

(e) To protect Priority Access Licensees from harmful interference from General Authorized Access Users consistent with § 96.23;

(f) To reserve the use of GAA channels for use in a CAF consistent with § 96.35; and

(g) To ensure secure transmission of information between the SAS and CBSDs.

§ 96.44 Information gathering and retention.

(a) The SAS shall maintain information on registered CBSDs, FSS locations listed in § 96.17, and Exclusion Zones.

(1) For CBSDs, such information shall include all information required by § 96.36.

(2) For incumbent FSS operators, the SAS shall maintain a record of the location of protected earth stations as well as the direction and look angle of all earth station receivers and any other information reasonable necessary to perform its functions under this part.

(b) [Reserved.]

§ 96.45 Registration and authorization of Citizens Broadband Radio Service Devices.

(a) An SAS must collect required information from CBSDs in accordance with the provisions of this part. CBSDs composed of a network of base and fixed stations may employ a subsystem for aggregating and communicating all required information with the SAS.

(1) The SAS must also verify that the FCC identifier (FCC ID) of a device seeking access to its services is valid. A list of devices with valid FCC IDs and the FCC IDs of those devices is to be obtained from the Commission's Equipment Authorization System.

(2) The SAS shall not permit CBSDs within Exclusion Zones to register or operate within the Citizens Broadband Radio Service.

(b) [Reserved.]

§ 96.46 Frequency assignment.

(a) The SAS will determine the available and appropriate channels/frequencies at a given location using the geographic information supplied by CBSDs, the frequency assignment data for Incumbent Users in the SAS, the authorization status and operating parameters of CBSDs in the surrounding area, and such other information necessary to ensure effective operations of CBSDs consistent with this part.

(1) Upon request from the Commission or a CBSD, the SAS shall confirm whether frequencies are available in a given geographic area.

(2) Upon request from the Commission, the SAS shall confirm that CBSDs in a given geographic area and frequency band have been shut down in response to a request from an Incumbent User.

(b) [Reserved.]

§ 96.47 Security.

(a) The SAS shall employ protocols and procedures to ensure that all communications and interactions between the SAS and CBSDs are accurate and secure and that unauthorized parties cannot access or alter the SAS or the list of frequencies sent to a CBSD.

(b) Communications between CBSDs and the SAS, between individual CBSDs, and between different SASs, shall be secure to prevent corruption or unauthorized interception of data. An SAS shall be protected from unauthorized data input or alteration of stored data.

(c) An SAS shall verify that the FCC identification number supplied by a CBSD is for a certified device and may not provide service to an uncertified device.

§ 96.48 Spectrum access system administrators.

The Commission will designate one or more entities to administer the SAS. The Commission may, at its discretion, permit the functions of an SAS, such as a data repository, federal information database, registration, and query services, to be divided among multiple entities; however, it shall designate one or more specific entities to be an SAS Administrator responsible for coordination of the overall functioning of an SAS and providing services to operators in the Citizens Broadband Radio Service. Each SAS Administrator designated by the Commission shall:

(a) Maintain a regularly updated database that contains the information described in § 96.44;

(b) Establish a process for acquiring and storing in the database necessary and appropriate information from the Commission's databases and synchronizing the database with the current Commission databases at least once a day to include newly licensed facilities or any changes to licensed facilities;

(c) Establish and follow a process for registering and protecting the Incumbent Users and enforcing the protection criteria set forth in §§ 96.15 and 96.17;

(d) Establish and follow a process for registering and coordinating Priority Access Licensees;

(e) Establish and follow a process for registering and coordinating General Authorized Access Users;

(f) Establish and follow protocols and procedures sufficient to ensure that Incumbent Users are protected from harmful interference from Priority Access Licensees and General Authorized Access Users consistent with §§ 96.15 and 96.17;

(g) Establish and follow protocols and procedures sufficient to ensure that Priority Access Licensees are protected from harmful interference from spectrally or geographically adjacent Priority Access Licensees and from General Authorized Access Users;

(h) Establish and follow protocols and procedures sufficient to ensure that all communications and interactions between the SAS and CBSDs are accurate and secure and that unauthorized parties cannot access or alter the SAS or the information transmitted from the SAS to CBSDs;

(i) Make its services available to Priority Access Licensees and General Authorized Access Users on a non-discriminatory basis;

(j) Provide service for a five-year term. This term can be renewed at the Commission's discretion;

(k) Respond in a timely manner to verify, correct or remove, as appropriate, data in the event that the Commission or a party brings claim of inaccuracies in the SAS to its attention. This requirement applies only to information that the Commission requires to be stored in the SAS;

(l) Secure transfer the information in the SAS, along with the IP addresses and URLs used to access the system, and a list of registered CBSDs, to another designated entity in the event it does not continue as the SAS administrator at the end of its term. It may charge a reasonable price for such conveyance;

(m) If more than one SAS is developed, the administrators shall cooperate to develop a standardized process for providing on a daily basis or

more often, as appropriate, the data collected pursuant to § 96.44;

(n) Provide a means to make all information that the rules require the SAS to collect available to the public in a reasonably accessible fashion; and

(o) Coordinate with other SAS Administrators including, to the extent possible, sharing information, facilitating non-interfering use by CBSDs connected to other SASs, maximizing available General Authorized Access frequencies by assigning PALs to similar channels in the same geographic regions, and other functions necessary to ensure that available spectrum is used efficiently consistent with this part.

§ 96.49 Spectrum access system administrator fees.

(a) An SAS Administrator may charge Citizens Broadband Radio Service users a reasonable fee for provision of the services set forth in § 96.43, *et seq.*

(b) The Commission, upon request, will review the fees and can require changes in those fees if they are found to be excessive.

[FR Doc. 2014–11732 Filed 5–30–14; 8:45 am]

BILLING CODE 6712–01–P

Notices

Federal Register

Vol. 79, No. 105

Monday, June 2, 2014

This section of the FEDERAL REGISTER contains documents other than rules or proposed rules that are applicable to the public. Notices of hearings and investigations, committee meetings, agency decisions and rulings, delegations of authority, filing of petitions and applications and agency statements of organization and functions are examples of documents appearing in this section.

U.S. AGENCY FOR INTERNATIONAL DEVELOPMENT

Notice of Public Information Collection Requirements Submitted to OMB for Review; ''Correction''

The United State Agency for International Development (USAID) published a New Information Collection to OMB for review and clearance under the Paper work Reduction Act of 1995, Public Law 104–13 notice in the **Federal Register** on May 1, 2014 (79 FR 24667). OIRA's email address and the complete physical address were omitted from the published notice on May 1, 2014. As a result USAID is issuing this notice to correct and extend the due date to June 16, 2014 to allow the public the opportunity to provide any comments.

Correction

In the **Federal Register** of May 1, 2014, in FR Doc. 2014–09935, on page 24667, in first paragraph, third sentence, correct the **SUMMARY** sentence to read:

SUMMARY: U.S. Agency for International Development (USAID) has submitted the following information collection to OMB for review and clearance under the Paperwork Reduction Act of 1995, Public Law 104–13. Comments regarding this information collection are best assured of having their full effect if received within 30 days of this notification. Comments should be addressed to: Desk Officer for USAID, Office of Information and Regulatory Affairs, Office of Management and Budget (OMB), 725 17th Street NW., Washington, DC 20503 or email address: *OIRA Submission@OMB.eop.gov.* Copies of submission may be obtained by calling (202) 712–5007.

Dated: May 22, 2014.

Lynn P. Winston,

Chief, Bureau for Management, Office of Management Services, Information and Records Division, US Agency for International Development.

[FR Doc. 2014–12445 Filed 5–30–14; 8:45 am]

BILLING CODE P

DEPARTMENT OF AGRICULTURE

Rural Utilities Service

Announcement of Grant Application Deadlines and Funding Levels for the Assistance to High Energy Cost Rural Communities and Bulk Fuel Grants

AGENCY: Rural Utilities Service, USDA.

ACTION: Notice of Funding Availability (NOFA).

SUMMARY: The Rural Utilities Service (RUS), an agency of the United States Department of Agriculture (USDA), announces the availability of up to $7 million in fiscal year 2014 (FY14) for competitive grants to assist communities with extremely high energy costs and, up to $1 million in FY14 for competitive grants to state entities to establish and support a revolving fund to provide a more cost-effective means of purchasing fuel where the fuel cannot be shipped by means of surface transportation. The grant funds to assist communities with extremely high energy costs may be used to acquire, construct, extend, upgrade, or otherwise improve energy generation, transmission, or distribution facilities serving communities in which the average residential expenditure for home energy exceeds 275 percent of the national average. The grant funds used to establish and support a revolving fund must be used to facilitate cost effective fuel purchases for persons, communities, and businesses in eligible areas. This notice describes the eligibility and application requirements, the criteria that will be used by RUS to award funding, and information on how to obtain application materials.

DATES: You may submit completed grant applications on paper or electronically according to the following deadlines:

- Paper applications must be postmarked and mailed, shipped, or sent overnight, *no later* than August 1, 2014, or hand delivered to RUS by this deadline, to be eligible under this NOFA. Late or incomplete applications will not be eligible for FY 2014 grant funding.
- Electronic applications must be submitted through Grants.gov *no later* than midnight August 1, 2014 to be eligible under this NOFA for FY 2014 grant funding. Late or incomplete electronic applications will not be eligible.
- Applications will not be accepted by electronic mail.

Applications will be accepted upon publication of this notice until midnight (EST) of the closing date of August 1, 2014.

ADDRESSES: You may submit completed applications for grants on paper or electronically to the following addresses:

- Paper applications are to be submitted to the Rural Utilities Service, Electric Programs, United States Department of Agriculture, 1400 Independence Avenue SW., STOP 1560, Room 5165 South Building, Washington, DC 20250–1560. Applications should be marked ''Attention: High Energy Cost Grant Program'' or ''Attention: Bulk Fuel Grant Program.''
- Applications may be submitted electronically through Grants.gov. Information on how to submit applications electronically is available on the Grants.gov Web site at *http://www.Grants.gov.*

Application Guides and materials may be obtained electronically through: *http://www.rurdev.usda.gov/UEP_Our_Grant_Programs.html.* Call the RUS Electric Programs at (202) 720–9545 to request paper copies of Application Guides and other materials.

FOR FURTHER INFORMATION CONTACT: Kristi Kubista-Hovis, Senior Policy Advisor, Rural Utilities Service, Electric Programs, United States Department of Agriculture, 1400 Independence Avenue SW., STOP 1560, Room 5165 South Building, Washington, DC 20250–1560. Telephone (202) 720–9545, Fax (202) 690–0717, email *Kristi.kubista-hovis@wdc.usda.gov.*

SUPPLEMENTARY INFORMATION:

Overview Information

Federal Agency Name: United States Department of Agriculture, Rural Utilities Service.

Funding Opportunity Title: Assistance to High Energy Cost Rural Communities and the Bulk Fuel Grant Program.

Announcement Type: Initial announcement.

Funding Opportunity Number: RD–RUS–HECG12.

Catalog of Federal Domestic Assistance (CFDA) Number: 10.859. The CFDA title for this program is ''Assistance to High Energy Cost Rural Communities.''

Dates: Applications must be postmarked and mailed or shipped, or hand delivered to the RUS, or filed with Grants.gov by August 1, 2014.

Items in Supplementary Information

I. Funding Opportunity Description: Brief introduction and definitions.

II. Award Information: Projected available funding.

III. Eligibility Information: Who is eligible, and what kinds of projects are eligible, what criteria determine basic eligibility.

IV. SUTA: The applicant needs to notify RUS that it is seeking consideration under the 7 CFR 1700, *Substantially Underserved Trust Areas* (the SUTA regulation) and identify the discretionary authorities of the Secretary of Agriculture described in the SUTA regulation that it seeks to have applied to its application.

V. Application and Submission Information: Where to get application materials, what constitutes a completed application, how and where to submit applications, deadlines, and items that are eligible.

VI. Application Review Information: Considerations and preferences, scoring criteria, review standards, and selection information.

VII. Award Administration Information: Award notice information, award recipient and reporting requirements.

VIII. Agency Contacts: Web, phone, fax, email, contact name.

I. Funding Opportunity Description

The Rural Utilities Service (RUS) is seeking applications for competitive grants under section 19 of the Rural Electrification Act of 1936 (the ''RE Act'') (7 U.S.C. 918a).

This NOFA announces the availability of FY14 grant funds, and provides an overview of the grant programs, the eligibility and application requirements, and selection criteria for grant proposals. This NOFA specifies the high energy cost and bulk fuel eligibility benchmarks and scoring criteria for FY14 grants. RUS is also making available an Application Guide with more detailed information on application requirements and copies of all required forms and certifications. The Application Guide is available on the Internet from the RUS Web site at: *http://www.rurdev.usda.gov/UEP_Our_Grant_Programs.html.* The Application Guide may also be requested from the contact listed in the **FOR FURTHER INFORMATION CONTACT** section of this notice. For additional information, applicants should consult the program regulations at 7 CFR part 1709.

Definitions

Consult the program regulations at 7 CFR part 1709 and the Application Guide for additional definitions used in this program. As used in this NOFA:

Agency means the Rural Utilities Service (RUS) of the United States Department of Agriculture.

Application Guide means the Application Guide prepared by RUS for the high energy cost grant program or bulk fuel grant program containing detailed instructions for preparing grant applications, and copies of required forms, questionnaires, and model certifications.

Area means the geographic area to be served by the grant.

Bulk Fuel Eligible area means any area where fuel cannot be shipped routinely by means of surface transportation and must be delivered by water or air for a significant part of the year. Eligible areas include areas where fuel delivery by means of surface transportation is not practical or is prohibitively expensive and the area is primarily dependent on delivery of fuel by water or air.

Community means the unit or units of local government in which the area is located.

Extremely high energy costs means community average residential energy costs that meet or exceed one or more home energy cost benchmarks established by the Administrator at 275 percent of the national average residential energy expenditures as reported by the Energy Information Administration (EIA) of the United States Department of Energy.

Fuel means coal, oil, gasoline, and other petroleum products, and any other material that can be burned to make energy.

Home energy means any energy source or fuel used by a household for purposes other than transportation, including electricity, natural gas, fuel oil, kerosene, liquefied petroleum gas (propane), other petroleum products, wood and other biomass fuels, coal, wind, and solar energy. Fuels used for subsistence activities in remote rural areas are also included.

High energy cost benchmarks means the criteria established by the Administrator for eligibility as an extremely high energy cost community. Home energy cost benchmarks are calculated for total annual household energy expenditures; total annual expenditures for individual fuels; annual average per unit energy costs for primary home energy sources and are set at 275 percent of the relevant national average household energy expenditures.

Indian Tribe means a Federally recognized Tribe as defined under section 4 of the Indian Self-Determination and Education Assistance Act (25 U.S.C. 450b) to include ''* * * any Indian Tribe, band, nation, or other organized group or community, including any Alaska Native village or regional or village corporation as defined in or established pursuant to the Alaska Native Claims Settlement Act [43 U.S.C. 1601 *et seq.*], that is recognized as eligible for the special programs and services provided by the United States to Indians because of their status as Indians.''

Person means any natural person, firm, corporation, association, or other legal entity, and includes Indian Tribes and Tribal entities.

Primary home energy source means the energy source that is used for space heating or cooling, water heating, cooking, and lighting. A household or community may have more than one primary home energy source.

RE Act means the Rural Electrification Act of 1936, as amended.

State entity means an agency, department, or instrumentality, or political subdivision of any of the several States of the United States or the District of Columbia, exclusive of local governments.

State rural development initiative means a rural economic development program funded by or carried out in cooperation with a State agency or Indian Tribe.

Surface transportation means transportation by road, rail, or pipeline.

Tribal entity means a legal entity that is owned, controlled, sanctioned, or chartered by the recognized governing body of an Indian Tribe.

II. Award Information

The total amount of funds available for high energy cost grants in FY14 under this notice is $7 million. The maximum amount of grant assistance that will be awarded for funding in a grant application under this notice is $3,000,000. The minimum amount of assistance for a grant application under this program is $50,000. The number of grants awarded under this NOFA will depend on the number of complete applications submitted, the amount of grant funds requested, the quality and competitiveness of applications submitted, and the availability of funds.

Applicants are limited to one award in FY14. No funding is available for education and outreach.

The total amount of funds available for the bulk fuel revolving fund grants is $1 million. The maximum amount of grant assistance that will be awarded for funding in a grant application under this notice is $1 million. The minimum amount of assistance for a grant application under this program is $50,000. The number of grants awarded under this NOFA will depend on the number of complete applications submitted, the amount of grant funds requested, the quality and competitiveness of applications submitted, and the availability of funds. Applicants are limited to one award in FY14.

The award period and period of performance will be from 1–3 years. Grant agreements will not be negotiated.

Applicants must provide a narrative grant proposal prepared according to the instructions in this NOFA and application guide, along with all required forms and information in order to submit a complete application.

All prior applicants must resubmit a new application to be considered for funding under this NOFA. There will be no exceptions.

All timely submitted and complete applications will be reviewed for eligibility and rated according to the criteria described in this NOFA. Applications will be ranked in order of their numerical scores on the rating criteria and forwarded to the RUS Administrator. The RUS Administrator is the federal selection official of the competitive awards. The Administrator will review the rankings and the recommendations of the rating panel. The Administrator will then fund grant applications in rank order to the extent of available funds.

The RUS reserves the right not to award all the funds made available under this notice. RUS anticipates making multiple awards. Applicants should take proper care in preparing the project's scope and cost estimate. The proposed scope and cost will not be negotiated.

III. Eligibility Information

1. Eligible Applicants for High Energy Cost Grants

Under Section 19 eligible applicants include ''persons, States, political subdivisions of States, and other entities organized under the laws of States'' (7 U.S.C. 918a). Under section 13 of the RE Act, the term person means ''any natural person, firm, corporation, or association'' (7 U.S.C. 913). Examples of eligible business applicants include: For-profit and non-profit business entities, including but not limited to corporations, associations, partnerships, limited liability partnerships (LLPs), cooperatives, trusts, and sole proprietorships. Eligible government applicants include State and local governments, counties, cities, towns, boroughs, or other agencies or units organized under the laws of States. Indian Tribes, other Tribal entities and Alaska Native Corporations are also eligible applicants.

An individual is an eligible applicant under this program; however, the proposed grant project must provide community benefits and not be for the sole benefit of an individual applicant or an individual household or business.

All applicants must demonstrate the legal capacity of the applicant to execute a binding grant agreement with the federal government at the time of the award and to carry out the proposed grant funded project according to its terms.

Corporations that have been convicted of a felony (or had an officer or agency acting on behalf of the corporation convicted of a felony) within the past 24 months are not eligible. Any Corporation that has any unpaid federal tax liability that has been assessed, for which all judicial and administrative remedies have been exhausted or have lapsed, and that is not being paid in a timely manner pursuant to an agreement with the authority responsible for collecting the tax liability, is not eligible.

2. Eligible Applicants for Bulk Fuel Revolving Fund Grants

Section 19 of the RE Act restricts eligible applicants to State entities, as defined above, in existence as of November 9, 2000. A state grant recipient may partner with other entities, including other government agencies in carrying out the programs funded under these grants.

3. Requirements for Both Grant Applications

All applicants for federal grants with the exception of individuals other than sole proprietorships must provide a Dun and Bradstreet (D&B) Data Universal Numbering System (DUNS) number when applying. Consistent with this Federal policy directive, any organization or sole proprietorship that applies for a high energy cost grant must use its DUNS number on the application and in the field provided on the revised Standard Form 424 (SF 424) ''Application for Federal Assistance'' to be eligible to apply. DUNS numbers are available for free to Federal Grant applicants on line at *http://fedgov.dnb.com/webform* or may be obtained through a short phone call to D&B. Please see the ''Get Registered'' section on Grants.gov for more information on how to obtain a DUNS number or how to verify if your organization already has a DUNS number. If you already have obtained a DUNS number in connection with the Federal acquisition process, or requested or had one assigned to you for another purpose, you should use that number on all of your applications. It is not necessary to request another DUNS number from D&B.

Applicants, whether applying electronically or by paper, must be registered in System for Award Management (SAM) (formerly the Central Contractor Registry (CCR)) prior to submitting an application. Applicants may register for the SAM at *https://www.sam.gov/*. Completing the SAM registration process takes up to five business days, and applicants are strongly encouraged to begin the process well in advance of the deadline specified in this notice.

The SAM registration must remain active with current information at all times while RUS is considering an application or while a Federal Grant Award or loan is active. To maintain the registration in the SAM database the applicant must review and update the information in the SAM database annually from date of initial registration or from the date of the last update. The applicant must ensure that the information in the database is current, accurate, and complete.

4. Cost Sharing and Matching

No cost sharing or matching funds are required as a condition of eligibility under this grant program. However, the RUS will consider other financial resources available to the grant applicant and any voluntary pledge of matching funds or other contributions in assessing the applicant's commitment and capacity to complete the proposed project successfully, including such contributions, adding additional points to their score. If a successful applicant proposes to use matching funds or other cost contributions in its project, the grant agreement will include conditions requiring documentation of the availability of the matching funds and actual expenditure of matching funds or cost contributions. RUS may require the applicant to provide additional documentation confirming the availability of any matching contribution offered prior to approval of project selection. If an applicant fails to

provide timely documentation of the availability of matching contributions, the RUS may, in its sole discretion, decline to award the project if uncertainties over availability of the match render the project financially unfeasible and impose additional conditions.

5. Other Eligibility Requirements

A. Eligible Projects for High Energy Cost Grant Applications

Grantees must use grant funds for eligible grant purposes. Grant funds may be used to acquire, construct, extend, upgrade, or otherwise improve energy generation, transmission, or distribution facilities serving eligible communities. All energy generation, transmission, and distribution facilities and equipment, used to provide electricity, natural gas, home heating fuels, and other energy service to eligible communities are eligible. Projects providing or improving energy services to eligible communities through on-grid and off-grid renewable energy projects, energy efficiency, and energy conservation projects are eligible. A grant project is eligible if it improves, or maintains energy services, or reduces the costs of providing energy services to eligible communities. Grant funds may not be used to pay utility bills or to purchase fuels. Funds may cover up to the full costs of any eligible projects subject to the statutory condition that no more than 4 percent of grant funds may be used for the planning and administrative expenses of the grantee. The program regulations at 7 CFR part 1709 provide more detail on allowable use of grant funds, limitations on grant funds, and ineligible grant purposes. The project must serve communities that meet the extremely high energy cost eligibility requirements described in this NOFA. The applicant must demonstrate that the proposed project will benefit the eligible communities. Projects that primarily benefit a single household or business are not eligible. Additional information and examples of eligible project activities are contained in the Application Guide.

Grant funds cannot be used for: (1) Preparation of the grant application; (2) Fuel purchases, routine maintenance or other operating costs; and (3) Purchase of equipment, structures, or real estate not directly associated with provision of residential energy services. In general, grant funds may not be used to support projects that primarily benefit areas outside of eligible communities. However, grant funds may be used to finance an eligible community's proportionate share of a larger energy project. Grant funds may not be used to refinance or repay the applicant's outstanding loans or loan guarantees under the RE Act.

Each grant applicant must demonstrate the economic and technical feasibility of its proposed project. Activities or equipment that would commonly be considered as research and development activities, or commercial demonstration projects for new energy technologies will not be considered as technologically feasible projects and would, thus, be ineligible grant purposes. However, grant funds may be used for projects that involve the innovative use or adaptation of energy-related technologies that have been commercially proven. RUS, in its sole discretion, will determine if a project relies on unproven technology, and that determination shall be final.

B. Eligible Projects for Bulk Fuel Revolving Fund Grant Program

Grant funds can only be used to establish and support a revolving loan fund that facilitates cost effective fuel purchases for persons, communities, and businesses in Bulk Fuel Eligible areas. Where a recipient State entity's existing program is authorized to fund multiple purposes, grant funds may only be used to the extent the recipient funds eligible activities.

C. Eligible Communities for High Energy Cost Grants

The grant project must benefit communities with extremely high energy costs. The RE Act defines an extremely high energy cost community as one in which ''the average residential expenditure for home energy is at least 275 percent of the national average residential expenditure for home energy'' 7 U.S.C. 918a. The benchmarks are set based on the latest available information from the Energy Information Administration (EIA) residential energy surveys.

The statutory requirement that community residential expenditures for home energy exceed 275 percent of the national average establishes a very high threshold for eligibility under this program. RUS has calculated high energy cost benchmarks based on the most recent EIA national average home energy expenditure data. The current benchmarks are shown in Table 1. Applicants must demonstrate that proposed communities must meet one or more high energy cost benchmarks to qualify as an eligible beneficiary of a grant under this program. All applications must meet these current eligibility benchmarks for high energy. Based on available published information on residential energy costs, RUS anticipates that only those communities with the highest energy costs across the country will qualify.

The EIA's Residential Energy Consumption and Expenditure Surveys (RECS) and reports provide the baseline national average household energy costs that were used for establishing extremely high energy cost community eligibility criteria for this grant program. The RECS data base and reports provide national and regional information on residential energy use, expenditures, and housing characteristics. EIA published its latest available RECS home energy expenditure survey results in 2012. These estimates of home energy usage and expenditures are based on national surveys conducted in 2009 survey data and are shown in Table 1 as follows:

TABLE 1—NATIONAL AVERAGE ANNUAL HOUSEHOLD ENERGY EXPENDITURES AND EXTREMELY HIGH ENERGY COST ELIGIBILITY BENCHMARKS EFFECTIVE FOR APPLICATIONS SUBMITTED ON OR AFTER JUNE 2, 2014

Fuel	EIA 2009 national annual average household expenditure ($ per year)	RUS extremely high energy cost benchmark 275% of national average ($ per year)
AVERAGE ANNUAL HOUSEHOLD EXPENDITURE		
Electricity	1,340	3,685
Natural Gas	804	2,211

TABLE 1—NATIONAL AVERAGE ANNUAL HOUSEHOLD ENERGY EXPENDITURES AND EXTREMELY HIGH ENERGY COST ELIGIBILITY BENCHMARKS EFFECTIVE FOR APPLICATIONS SUBMITTED ON OR AFTER JUNE 2, 2014—Continued

Fuel	EIA 2009 national annual average household expenditure ($ per year)	RUS extremely high energy cost benchmark 275% of national average ($ per year)
Fuel Oil	1,338	3,680
LPG/Propane	972	2,673
Total Household Energy Use	2,024	5,566
Fuel (units)	**EIA 2009 national average unit cost ($ per unit)**	**RUS extremely high energy cost benchmark 275% of national average ($ per unit)**
ANNUAL AVERAGE PER UNIT RESIDENTIAL ENERGY COSTS		
Electricity (Kilowatt hours)	.12	.33
Natural Gas (thousand cubic feet)	12.18	33.50
Fuel Oil (gallons)	2.42	6.68
LPG/Propane (gallons)	2.09	5.76
Kerosene (gallons)	2.72	7.49
Total Household Energy (million Btus)	22.59	62.12

Sources: Energy Information Administration, United States Department of Energy, *2009 Residential Energy Consumption Survey Data—Detailed Tables,* available at: *http://www.eia.gov/consumption/residential/data/2009/.*

Extremely high energy costs in rural and remote communities typically result from a combination of factors including high energy consumption, high per unit energy costs, limited availability of energy sources, extreme climate conditions, and housing characteristics. The relative impacts of these conditions exhibit regional and seasonal diversity. Market factors have created an additional complication in recent years as the prices of the major commercial residential energy sources—electricity, fuel oil, natural gas, and LPG/propane—have fluctuated dramatically in some areas.

The applicant must demonstrate that each community in the grant project's proposed area exceeds one or more of these high energy cost benchmarks to be eligible for a grant under this program.

i. High Energy Cost Benchmarks. The benchmarks measure extremely high energy costs for residential consumers. These benchmarks were calculated using EIA's estimates of national average residential energy expenditures per household and by primary home energy source. The benchmarks recognize the diverse factors that contribute to extremely high home energy costs in rural communities. The benchmarks allow extremely high energy cost communities several alternatives for demonstrating eligibility. Communities may qualify based on: Total annual household energy expenditures; total annual expenditures for commercially-supplied primary home energy sources, *i.e.,* electricity, natural gas, oil, or propane; or average annual per unit home energy costs. By providing alternative measures for demonstrating eligibility, the benchmarks reduce the burden on potential applicants created by the limited public availability of comprehensive data on local community energy consumption and expenditures.

A community or area will qualify as an extremely high cost energy community if it meets one or more of the energy cost eligibility benchmarks described below.

a. *Extremely High Average Annual Household Expenditure for Home Energy.* The area or community exceeds one or more of the following:

- Average annual residential electricity expenditure of $3,685 per household;
- Average annual residential natural gas expenditure of $2,211 per household;
- Average annual residential expenditure on fuel oil of $3,680 per household;
- Average annual residential expenditure on propane or liquified petroleum gas (LPG) as a primary home energy source of $2,673 per household; or
- Average annual residential energy expenditure (for all non-transportation uses) of $5,566 per household.

b. *Extremely High Average per unit energy costs.* The average residential per unit cost for major commercial energy sources in the area or community exceeds one or more of the following:

- Annual average cost per kilowatt hour for residential electricity customers of $0.33 per kilowatt hour (kWh);
- Annual average residential natural gas price of $33.50 per thousand cubic feet;
- Annual average residential fuel oil price of $6.68 per gallon;
- Annual average residential price of propane or LPG as a primary home energy source of $5.76 per gallon;
- Annual average residential price of Kerosene as a primary home energy source of $7.49 per gallon or
- Total annual average residential energy cost on a Btu basis of $62.12 per million Btu.[1]

ii. Supporting Energy Cost Data. The applicant must include information that demonstrates its eligibility under RUS's high energy cost benchmarks for the communities and areas. The applicant must supply documentation or references for its sources for actual or

[1] Note: Btu is the abbreviation for British thermal unit, a standard energy measure. A Btu is the quantity of heat needed to raise the temperature of one pound of water 1 degree Fahrenheit at or near 39.2 degrees Fahrenheit.

estimated home energy expenditures or equivalent measures to support eligibility. Generally, the applicant will be expected to use historical residential energy cost or expenditure information for the local energy provider serving the community or area to determine eligibility. Other potential sources of home energy related information include Federal and State agencies, local community energy providers such as electric and natural gas utilities and fuel dealers, and commercial publications. The Application Guide includes a list of EIA resources on residential energy consumption and costs that may be of assistance.

The grant applicant must establish eligibility for each community in the project's area. To determine eligibility, the applicant must identify each community included in whole or in part within the areas and provide supporting actual or estimated energy expenditure data for each community. The smallest area that may be designated as an area is a 2010 Census block. This minimum size is necessary to enable a determination of population size.

Potential applicants can compare the benchmark criteria to available information about local energy use and costs to determine their eligibility. Applicants should demonstrate their eligibility using historical energy use and cost information. Where such information is unavailable or does not adequately reflect the actual costs of supporting average home energy use in a local community, RUS will consider estimated commercial energy costs. The Application Guide includes examples of circumstances where estimated energy costs are used.

EIA does not collect or maintain data on home energy expenditures in sufficient detail to identify specific rural localities as extremely high energy cost communities. Therefore, grant applicants will have to provide information on local community energy costs from other sources to support their applications.

In many instances, historical community energy cost information can be obtained from a variety of public sources or from local utilities and other energy providers. For example, EIA publishes monthly and annual reports of residential prices by State and by service area for electric utilities and larger natural gas distribution companies. Average residential fuel oil and propane prices are reported regionally and for major cities by government and private publications. Many State agencies also compile and publish information on residential energy costs to support State programs.

iii. Use of Estimated Home Energy Costs. Where historical community energy cost data are incomplete or lacking or where community-wide data does not accurately reflect the costs of providing home energy services in the area, the applicant may substitute estimates based on engineering standards. The estimates should use available community, local, or regional data on energy expenditures, consumption, housing characteristics and population. Estimates are also appropriate where the area does not presently have centralized commercial energy services at a level that is comparable to other residential customers in the State or region. For example, local commercial energy cost information may not be available where the area is without local electric service because of the high costs of connection. Engineering cost estimates reflecting the incremental costs of extending service could reasonably be used to establish eligibility for areas without grid-connected electric service. Estimates also may be appropriate where historical energy costs do not reflect the cost of providing a necessary upgrade or replacement of energy infrastructure to maintain or extend service that would raise costs above one or more benchmarks. Information to support high energy cost eligibility is subject to independent review by RUS. Applications that contain information that is not reasonably based on credible sources of information and sound estimates will be rejected. Where appropriate, RUS may consult standard sources to confirm the reasonableness of information and estimates provided by an applicant in determining eligibility, technical feasibility, and adequacy of proposed budget estimates.

D. Limitations on Grant Awards

i. Statutory Limitation on Planning and Administrative Expenses for both Grants. Section 19 of the RE Act provides that no more than 4 percent of the grant funds for any project may be used for planning and administrative expenses of the grantee.

ii. Ineligible Grant Purposes for High Energy Cost Grants. Grant funds cannot be used for: Preparation of the grant application, fuel purchases, routine maintenance or other operating costs, and purchase of equipment, structures, or real estate not directly associated with provision of residential energy services. In general, grant funds may not be used to support projects that primarily benefit areas outside of eligible communities. However, grant funds may be used to finance an eligible community's proportionate share of a larger energy project.

Consistent with USDA policy and program regulations, grant funds awarded under this program generally cannot be used to replace other USDA assistance or to refinance or repay outstanding loans under the RE Act. Grant funds may, however, be used in combination with other USDA assistance programs including electric loans. Grants may be applied toward grantee contributions under other USDA programs depending on the specific terms of those programs. For example, an applicant may propose to use grant funds to offset the costs of electric system improvements in extremely high cost areas by increasing the utility's contribution for line extensions or system expansions to its distribution system financed in whole or part by an electric loan under the RE Act. An applicant may propose to finance a portion of an energy project for an extremely high energy cost community through this grant program and secure the remaining project costs through a loan or loan guarantee from RUS or other grant sources. The determination of whether a project will be completed in this manner will be made solely by the Administrator.

iii. Maximum and Minimum Awards. For High Energy Cost Grants, the maximum amount of grant assistance that will be considered for funding per grant application under this notice is $3,000,000. The minimum amount of assistance for a competitive grant application under this program is $50,000.

For bulk fuel revolving fund grants, the maximum amount of grant assistance that will be considered for funding per grant application under this notice is $1 million. The minimum amount of assistance for a competitive grant application under this program is $50,000.

IV. SUTA

The 2008 Farm Bill (Pub. L. 110–246, codified at 7 U.S.C. 906f), authorizes the Substantially Underserved Trust Areas (SUTA) provisions, as implemented by RUS as regulation 7 CFR 1700, *Substantially Underserved Trust Areas* (the SUTA regulation). Under the SUTA regulation, the applicant may request the Agency apply one or more SUTA provisions to its application. To receive consideration the applicant needs to submit to RUS a completed application in compliance with 7 CFR 1709, and include a section requesting consideration under the SUTA regulation. This section notifies RUS that the applicant is seeking

consideration under the SUTA regulation and identifies the discretionary authorities the Secretary of Agriculture described in the SUTA regulation—that it seeks to have applied to its application. In this section the applicant must include the information demonstrating eligibility for consideration under the SUTA regulation, and an explanation and documentation of the high need for the HECG or bulk fuel revolving fund benefits. RUS will review the application to determine whether the applicant is eligible to receive consideration under SUTA. RUS will notify the applicant in writing whether (1) the application is eligible to receive consideration under this subpart and if one or more SUTA requests are granted; or (2) the application is not eligible to receive further consideration under the SUTA regulation. If the SUTA request is not granted, the applicant may withdraw its application or, if the application is still eligible without SUTA consideration, request that RUS treat its application as an ordinary application for processing. For more detailed guidance on how to apply for a grant under SUTA, please refer to the FY 2014 Application Guide available at *http://www.rurdev.usda.gov/UEP_Our_Grant_Programs.html*.

V. Application and Submission Information

All applications must be prepared and submitted in compliance with this NOFA and the Application Guide. The Application Guide contains additional information on the grant programs, sources of information for use in preparing applications, examples of eligible projects, and copies of the required application forms.

1. Address To Request an Application Package

Applications materials and the Application Guide are available for download through *http://www.Grants.gov* (under CFDA No. 10.859) and on the Electric Programs Web site at: *http://www.rurdev.usda.gov/UEP_Our_Grant_Programs.html*.

Application packages, including required forms, may be also be requested from: Kristi Kubista-Hovis, Senior Policy Advisor, United States Department of Agriculture, Rural Development Utilities Programs, Electric Program, 1400 Independence Avenue SW., STOP 1560, Room 5165 South Building, Washington, DC 20250–1560. Telephone (202) 720–9545, Fax (202) 690–0717, email *kristi.kubista-hovis@wdc.usda.gov*.

2. Content and Form of Application Submission

Applicants must follow the directions in this notice and the Application Guide in preparing their applications and narrative proposals. The completed application package should be assembled in the order specified with all pages numbered sequentially or by section.

A. Application Contents

Applicants must submit the following information for the application to be complete and considered for funding:

i. Formatting and length of application. All applications must be on single-sided pages and all pages must be numbered. Only numbered pages will be reviewed. All applications are limited to the page limits specified by each section in this NOFA. Any additional pages greater than what is specified in this NOFA will not be reviewed and considered.

ii. Part A. A Completed SF 424, ''Application for Federal Assistance.'' This form must be signed by a person authorized to submit the proposal on behalf of the applicant. **Note:** SF 424 has recently been revised to include new required data elements, including a DUNS number. You must submit the revised form. Copies of this form are available in the application package available online through RUS's Web site or through Grants.gov, or by request from the RUS contact listed above.

iii. Part B. Grant Eligibility for High Energy Cost Grants (3 pages total). The Grant Eligibility is a narrative section that establishes the applicant's eligibility.

a. *Project Abstract and Eligibility.* This section provides a summary of the proposed project. The project must be described in sufficient detail to establish that it is an eligible project according to this NOFA.

b. *Applicant Eligibility.* This section includes a narrative statement that identifies the applicant and supporting evidence establishing that the applicant has or will have the legal authority to enter into a financial assistance relationship with the Federal Government. Applicants must also be free of any debarment or other restriction on their ability to contract with the Federal government.

iv. Part B. Grant Eligibility for Bulk Fuel Revolving Fund Grants (1 page total). The Grant Eligibility is a narrative section that establishes the applicant's eligibility.

a. *Project Abstract and Eligibility.* This section provides a summary of the proposed project.

b. *Applicant Eligibility.* The applicant must establish that the applicant is a State entity that was in existence as of November 9, 2000, and has the legal authority to enter into a financial assistance relationship with the Federal Government to carry out the grant activities.

3. Community Eligibility for High Energy Cost Grants

This section provides a narrative description of the community or communities to be served by the project and supporting information to establish eligibility. The narrative must show that the proposed grant project's area or areas are located in one or more communities where the average residential energy costs exceed one or more of the benchmark criteria for extremely high energy costs as described in this NOFA. The narrative should clearly identify the location and population of the areas to be aided by the grant project and their energy costs and the population of the local government division in which they are located. Local energy providers and sources of high energy cost data and estimates should be clearly identified. Neither the applicant nor the project must be physically located in the extremely high energy cost community, but the funded project must serve an eligible community. The population estimates should be based on the results of the 2010 Census available from the U.S. Census Bureau. Additional information and exhibits supporting eligibility may include maps, summary tables, and references to statistical information from the U.S. Census, the Energy Information Administration, other Federal and State agencies, or private sources. The Application Guide includes additional information and sources that the applicant may find useful in establishing community eligibility.

A. Part C. Grant Proposal (Maximum of 30 Pages)

The grant proposal is a narrative description prepared by the applicant that describes the proposed grant project, the potential benefits of the project, and a proposed budget. The grant proposal should contain the following sections in the order indicated.

i. Executive Summary (1 page). The Executive Summary is a one page narrative summary that: (1) Identifies the applicant, project title, and the key contact person with telephone and fax numbers, mailing address and email address; (2) specifies the amount of grant funds requested; and (3) provides

a brief description of the proposed project including the eligible rural communities and residents to be served, activities and facilities to be financed, and how the grant project will offset or reduce the community's extremely high energy costs.

ii. Project Needs (2 pages). This section is a narrative that describes the needs of the community. To the maximum extent possible grant funds will be directed to the smallest communities with the lowest incomes emphasizing areas where according to the American Community Survey data by census tracts show that at least 20 percent of the population is living in poverty. This emphasis supports Rural Development's goal of providing 20 percent of its funding by 2016 to these areas of need. Applicants must also identify if their community is deemed an economic hardship community or if the community is facing an imminent hazard. A community facing economic hardship is defined as a situation where the 2000 median household income for the community is 20 percent below the State average or where the community suffers from economic conditions that severely constrain its ability to provide or improve energy facilities serving the community. Projects focused in correcting an imminent hazard are defined as projects that will correct a condition posing an imminent hazard to public safety, public welfare, the environment, or to a critical community or residential energy facility in immediate danger of failure because of a deteriorated condition, capacity limitation, or damage from a natural disaster or accident. Applicants must describe in detail and document conditions creating severe community economic hardship or imminent hazard in the proposal.

iii. Project Description (Design) (5 pages): This section must provide a narrative description of the project including a proposed scope of work identifying major tasks and proposed schedules for task completion, a detailed description of the equipment, facilities and associated activities to be financed with grant funds, the location of the eligible extremely high energy cost communities to be served, and an estimate of the overall duration of the project. The Project Design description should be sufficiently detailed to support a finding of technical feasibility. Proposed projects involving construction, repair, replacement, or improvement of electric generation, transmission, and distribution facilities must generally be consistent with the standards and requirements for projects financed with loans and loan guarantees under the RE Act as set forth in RUS's Electric Programs Regulations and Bulletins and may reference these requirements.

iv. Project Goals and objectives and Project Performance Measures (2 pages): The applicant should clearly identify how the project addresses the energy needs of the community and include appropriate measures of project success such as, for example, expected reductions in household or community energy costs, avoided cost increases, enhanced reliability, or economic or social benefits from improvements in energy services available to the community. The applicant should include quantitative estimates of cost or energy savings and other benefits. The applicant should provide documentation or references to support its statements about cost-effectiveness savings and improved services. The applicant should also describe how it plans to measure and monitor the effectiveness of the program in delivering its projected benefits.

v. Project Management (8 pages): This section must provide a narrative describing the applicant's capabilities and project management plans. The description should be broken down into the following subsections:

a. Management Plan and Schedule (2 pages). This subsection should include the application's organizational structure, method of funding, if the applicant proposes to use affiliated entities, and production schedule in implementing the grant award. If the applicant proposes to secure equipment, design, construction, or other services from non-affiliated entities, the applicant must briefly describe how it plans to procure and/or contract for such equipment or services. The applicant should provide information that will support a finding that the combination of management team's experience, financial management capabilities, resources and project structure will enable successful completion of the project.

b. Project Reporting Plan (2 pages). This subsection should provide a detailed description of the reporting requirements as well as consequences if the project falls behind.

c. *Relevant Organizational Experience (2 pages).* This subsection should include a detailed description of the organization that will install or implement the proposed projects. Information on success rates, past project long term viability, and consumer complaints are required. If the applicant has received any HECG funding, or other Federal funding a detailed description of past performance is required in this section.

d. Key Staff Experience (2 pages). This subsection requires bio/descriptions of all key staff and must be provided. If the applicant proposes to use affiliated entities, contractors, or subcontractors to provide services funded under the grant, the applicant must describe the identities, relationship, qualifications, and experience of these affiliated entities. The experience and capabilities of these entities will be reviewed by the rating panel.

vi. Regulatory and other approvals (2 pages). The applicant must identify any other regulatory or other approvals required by other Federal, State, local, or Tribal agencies, or by private entities as a condition of financing that are necessary to carry out the proposed grant project and its estimated schedule for obtaining the necessary approvals. Prior to the obligation of any funds for the selected proposals, applicants will be required to gather specific information in order for RUS to comply with the National Environmental Policy Act of 1969 (NEPA) and National Historic Preservation Act (NHPA), for which the provision of funding is considered an undertaking subject to review. The environmental information that must be supplied by the applicant can be found in the environmental report in the application materials.

vii. Rural development initiatives (1 page). The narrative should describe whether and how the proposed project will support any State rural development initiatives. If the project is in support of a rural development initiative, including SUTA, the application should include confirming documentation from the appropriate rural development agency. The application must identify the extent to which the project is dependent upon or tied to other rural development initiatives, funding and approvals. The applicant should also clarify if they are located in a rural community of less than 20,000 people or are receiving matching funds from an outside source. Projects that do not support a State rural development initiative, but are located in communities of less than 20,000, or will receive matching funds will still receive points. Projects will be awarded 5 points for each rural development initiative mentioned.

viii. Proposed Project Budget (4 pages). The applicant must submit a proposed budget for the grant program on SF 424A, ''Budget Information—Non-Construction Programs'' or SF–424C, ''Standard Form for Budget Information—Construction Programs,'' as applicable. All applicants that submit

applications through Grants.gov must use SF–424A. The applicant should supplement the budget summary form with more detailed information describing the basis for cost estimates. The detailed budget estimate should itemize and explain major proposed project cost components such as, but not limited to, the expected costs of design and engineering and other professional services, personnel costs (salaries/wages and fringe benefits), equipment, materials, property acquisition, travel (if any), and other direct costs, and indirect costs, if any. The budget must document that planned administrative and other expenses of the project sponsor that are not directly related to performance of the grant will not total more than 4 percent of grant funds. The applicant must also identify the source and amount of any other Federal or non-Federal contributions of funds or services that will be used to support the proposed project.

ix. Supplementary Material (5 pages). Only letters of Support will be accepted as Supplementary materials. No other additional information will be accepted or reviewed. Letters from Congress will not be counted against the page limitation.

B. Part D. Additional Required Forms and Certifications

In order to establish compliance with other Federal requirements for financial assistance, the applicant must execute and submit with the initial application the following forms and certifications:

- SF 424B, ''Assurances—Non-Construction Programs'' or SF 424D, ''Assurances—Construction Programs'' (as applicable). All applicants applying through Grants.gov must use form SF 424B.
- SF LLL, ''Disclosure of Lobbying Activities.''
- ''Certification Regarding Debarment, Suspension and Other Responsibility Matter—Primary Covered Transactions'' as required under 7 CFR part 3017, Appendix A. Certifications for individuals, corporations, nonprofit entities, Indian Tribes, partnerships.
- Environmental Report. The RUS environmental report template included in the Application Guide solicits information about project characteristics and site-specific conditions that may involve environmental, historic preservation, and other resources. The information will be used by RUS's environmental staff to determine what, if any, additional environmental impact analyses may be necessary before a final grant award may be approved. A copy of the environmental report and instructions for completion are included in the Application Guide and may be downloaded from RUS's Web site or Grants.gov.

4. Community Eligibility for Bulk Fuel Revolving Fund Grants

This section provides a narrative description of the community or communities to be served by the revolving loan fund. Applicants must prove that the area is dependent on delivery of fuel by water or air and fuel cannot be shipped by means of surface transportation either because of physical constraints or because surface transportation is not practical or is prohibitively expensive.

A. Part C. Grant Proposal (Maximum of 26 Pages)

The grant proposal is a narrative description prepared by the applicant that describes the proposed grant project, the potential benefits of the project, and a proposed budget. The grant proposal should contain the following sections in the order indicated.

i. Executive Summary (1 page). The Executive Summary is a one page narrative summary that: (1) Identifies the State entity applying for the grant; (2) specifies the amount of grant funds requested; and (3) provides a brief description of the proposed program, including the estimated number of potential beneficiaries, their estimated fuel needs, the projects and activities to be financed through the revolving loan fund, and how the projects and activities will improve the cost effectiveness of fuel procured.

ii. Project Needs (2 pages). This section is a narrative that describes the needs of the community. To the maximum extent possible grant funds will be directed to the smallest communities with the lowest incomes emphasizing areas where according to the American Community Survey data by census tracts show that at least 20 percent of the population is living in poverty. This emphasis supports Rural Development's goal of providing 20 percent of its funding by 2016 to these areas of need. It must also describe the criteria used to identify eligible areas, including the characteristics that make fuel deliveries by surface transportation impossible or impracticable. It must also identify if the community is deemed an economic hardship community or if the community is facing an imminent hazard. A community facing economic hardship is defined as a situation where the 2010 median household income for the community is 20 percent below the State average or where the community suffers from economic conditions that severely constrain its ability to provide or improve energy facilities serving the community. Projects focused in correcting an imminent hazard are defined as projects that will correct a condition posing an imminent hazard to public safety, public welfare, the environment, or to a critical community or residential energy facility in immediate danger of failure because of a deteriorated condition, capacity limitation, or damage from a natural disaster or accident. Applicants must describe in detail and document conditions creating severe community economic hardship or imminent hazard in the proposal.

iii. Project Description (Design) (5 pages). This section must provide a narrative description of the project including the following items: (1) The legal structure and staffing of the revolving fund proposal for fuel purchase support; (2) The objectives of the project, the proposed criteria for establishing project funding eligibility and how the project is to be staffed, managed and financed; (3) How the potential beneficiaries will be informed of the availability of revolving fund benefits to them; (4) How the proposed revolving fund program will help provide a more cost-effective means of meeting fuel supply needs in eligible areas, encourage the adoption of financially sustainable energy practices, the adequate planning and investment in bulk fuel facility operations and maintenance and cost-effective investments in energy efficiency; and (5) If the revolving fund program is not yet operational, a proposed implementation schedule and milestones should be provided.

iv. Project Goals and objectives and Project Performance Measures (2 pages). The applicant should clearly identify how the project addresses the energy needs of the community and include appropriate measures of project success. The applicant should also describe how it plans to measure and monitor the effectiveness of the program in delivering its projected benefits.

v. Project Management (6 pages): This section must provide a narrative describing the applicant's capabilities and project management plans. The description should be broken down into the following subsections:

a. Management Plan and Schedule (2 pages). This subsection should include the application's organizational structure, method of funding, if the applicant proposes to use affiliated entities, and production schedule in implementing the grant award.

b. Project Reporting Plan (2 pages). This subsection should provide a

detailed description of the reporting requirements as well as consequences if the project falls behind.

c. Relevant Organizational Experience (2 pages). This subsection should include a detailed description of the organization that will oversee and implement the revolving loan fund. Applicants should note if they have received bulk fuel revolving grant funds in the past.

vi. Rural development initiatives (1 page). The narrative should describe whether and how the proposed project will support any State rural development initiatives. If the project is in support of a rural development initiative, the application should include confirming documentation from the appropriate rural development agency. The application must identify the extent to which the project is dependent upon or tied to other rural development initiatives, funding and approvals. The applicant should also clarify if they are located in a rural community of less than 20,000 people or are receiving matching funds from an outside source. Projects that do not support a State rural development initiative, but are located in communities of less than 20,000, or will receive matching funds that exceed 25 percent of the annual funding operations will still receive points.

vii. Proposed Project Budget (4 pages). The applicant must submit a proposed budget for the grant program on SF 424A, ''Budget Information—Non-Construction Programs.'' All applicants that submit applications through Grants.gov must use SF–424A. The applicant should supplement the budget summary form with more detailed information describing the basis for cost estimates. The level of detail must be sufficient for reviewers to determine that grant funds will be used only for eligible purposes and to determine the extent to which the program is entirely dependent on grant funding or whether it has financial support from the State or other sources.

viii. Supplementary Material (5 pages). Only letters of Support will be accepted as Supplementary materials. No other additional information will be accepted or reviewed. Letters from Congress will not be counted against the page limitation.

B. Part D. Additional Required Forms and Certifications

In order to establish compliance with other Federal requirements for financial assistance, the applicant must execute and submit with the initial application the following forms and certifications:

- SF 424B, ''Assurances—Non-Construction Programs'' or SF 424D, ''Assurances—Construction Programs'' (as applicable). All applicants applying through Grants.gov must use form SF 424B.
- SF LLL, ''Disclosure of Lobbying Activities.''
- ''Certification Regarding Debarment, Suspension and Other Responsibility Matter—Primary Covered Transactions'' as required under 7 CFR part 3017, Appendix A. Certifications for individuals, corporations, nonprofit entities, Indian Tribes, partnerships.
- Environmental Report. The RUS environmental report template included in the Application Guide solicits information about project characteristics and site-specific conditions that may involve environmental, historic preservation, and other resources. The information will be used by RUS's environmental staff to determine what, if any, additional environmental impact analyses may be necessary before a final grant award may be approved. A copy of the environmental report and instructions for completion are included in the Application Guide and may be downloaded from RUS's Web site or Grants.gov.

5. Additional Information Requests

In addition to the information required to be submitted in the application package, the RUS may request that successful grant applicants provide additional information, analyses, forms and certifications before the grant agreement is signed and funds are obligated but after the award is subject to any environmental reviews or other reviews or certifications required under USDA and Government-wide assistance regulations. The RUS will advise the applicant in writing of any additional information required.

6. Submitting the Application

Applicants that are submitting paper application packages must submit one original application package that includes original signatures on all required forms and certifications and two copies. Applications should be submitted on 8½ x 11 inch white paper.

A completed paper application package must contain all required parts in the order indicated in the above section on ''Content and Form of Application Submission.'' The application package should be paginated either sequentially or by section. Applicants are requested to provide the application package in single-sided format for ease of copying.

Applicants that are submitting application packages electronically through the Federal grants portal Grants.gov (*http://www.Grants.gov*) must follow the application requirements and procedures and submit all the forms in the application package provided there. The Grants.gov Web site contains full instructions on all required registration, passwords, credentialing and software required to submit applications electronically. Grants.gov has streamlined the registration and credentialing process and now requires separate application processes for individuals and organizations. Individual applicants, including individuals applying on behalf of an organization, should follow the special directions for individuals on the Grants.gov Web site. Organizational applicants and sole proprietorships should follow the instructions for organizations.

Organizational applicants are advised that completion of the requirements for registration with Grants.gov, with the System for Award Management (SAM) (formerly Central Contractor Registry, (CCR)), and e-Authentication required under Grants.gov may take a week or more and may be delayed. Accordingly, RUS strongly recommends that you complete your organization's registration with Grants.gov well in advance of the deadline for submitting applications.

7. Disclosure of Information

All material submitted by the applicant may be made available to the public in accordance with the Freedom of Information Act (5 U.S.C. 552) and USDA's implementing regulations at 7 CFR part 1.

8. Submission Dates and Times

Applications must be postmarked or hand delivered to the RUS or posted to Grants.gov by August 1, 2014. RUS will begin accepting applications on the date of publication of this NOFA. RUS will accept for review all applications postmarked or delivered to us by this deadline. Late or incomplete applications will not be considered and discarded.

For the purposes of determining the timeliness of an application the RUS will accept the following as valid postmarks: The date stamped by the United States Postal Service on the outside of the package containing the application delivered by U.S. Mail; the date the package was received by a commercial delivery service as evidenced by the delivery label; the date received via hand delivery to the RUS headquarters; and the date an electronic application was posted for submission to Grants.gov.

9. Intergovernmental Review

This program is not subject to the requirements of Executive Order 12372, ''Intergovernmental Review of Federal Programs,'' as implemented under USDA's regulations at 7 CFR part 3015.

10. Other Submission Requirements

A completed application must contain all required parts in the order indicated in the above section on ''Content and Form of Application Submission.'' The application package should be paginated either sequentially or by section.

The completed paper application package and two copies must be delivered to the RUS headquarters in Washington, DC, using United States Mail, overnight delivery service, or by hand to the following address: Rural Utilities Service, Electric Programs, United States Department of Agriculture, 1400 Independence Avenue SW., STOP 1560, Room 5165 South Building, Washington, DC 20250–1560. Applications should be marked ''Attention: High Energy Cost Community Grant Program'' or ''Attention: Bulk Fuel Revolving Fund Grant Program.''

Applicants are advised that regular mail deliveries to Federal Agencies, especially of oversized packages and envelopes, continue to be delayed because of increased security screening requirements. Applicants may wish to consider using Express Mail or a commercial overnight delivery service instead of regular mail. Applicants wishing to hand deliver or use courier services for delivery should contact an RUS representative in advance to arrange for building access. If an applicant wishes to submit such materials, they should contact an RUS representative for additional information.

After the grant application deadline has passed, USDA will send an electronic confirmation acknowledging that the application has been received by the RUS from Grants.gov. Grants.gov will not accept applications for filing after the deadline has passed. RUS will not accept applications directly over the Internet, by email, or fax.

Applicants should be aware that Grants.gov requires that applicants complete several preliminary registrations and e-authentication requirements before being allowed to submit applications electronically. Applicants should consult the Grants.gov Web site and allow ample time to complete the steps required for registration before submitting their applications.

Applicants may download application materials and complete forms online through Grants.gov without completing the registration requirements. Application materials prepared online may be printed and submitted in paper to RUS as detailed above.

11. Multiple Applications

Eligible applicants must include only one project per application, but the project can include many locations. For high energy cost grants, no more than $3 million in grant funds will be awarded per project application. For bulk fuel revolving fund grants, no more than $1 million in grants will be awarded per project application. An applicant will only be awarded funding for one project under this NOFA. An applicant will not receive funding for numerous projects under this NOFA.

VI. Application Review Information

After the application closing date, RUS will not consider any unsolicited information from the applicant. The RUS may contact the applicant for additional information or to clarify statements in the application required to establish applicant or community eligibility and completeness. Only applications that are complete and meet the eligibility criteria will be considered. The RUS will not accept or solicit any additional information relating to the technical merits and feasibility of the grant proposal after the application closing date.

If the RUS determines that an application package was not delivered to RUS or postmarked on or before the deadline of August 1, 2014, the application will be rejected as untimely.

After review, the RUS will reject any application package that in its sole discretion is not complete or that does not demonstrate that the applicant, community or project is eligible under the requirements of this NOFA and applicable program regulations. Applicants will be notified in writing of RUS's decision. Applicants may appeal the eligibility rejection pursuant to program regulations on appeals at 7 CFR 1709.6 for the high energy cost grant program. Applicants must appeal in writing to the RUS Administrator within 10 days after the applicant is notified of the determination to reject the application. The appeal must state the basis for the appeal. Appeals must be directed to the Administrator, Rural Utilities Service, United States Department of Agriculture, 1400 Independence Ave. SW., STOP 1500, Washington, DC 20250–1500. The Administrator will review the appeal to determine whether to sustain, reverse, or modify the original determination by the Assistant Administrator. The Administrator's decision shall be final. A written copy of the Administrator's decision will be furnished promptly to the applicant.

The panel will evaluate and rate all complete applications that meet the eligibility requirements using the selection criteria and weights described in this NOFA.

As part of the proposal review and ranking process, panel members may make comments and recommendations for appropriate conditions on grant awards to promote successful performance of the grant or to assure compliance with other Federal requirements. The decision to include panel recommendations on grant conditions in any grant award will be at the sole discretion of the RUS Administrator.

All applications will be scored and ranked according to the evaluation and scoring criteria described in this Notice. The RUS will use the ratings and recommendations of the panel to rank applicants against other applicants. All applicants will be ranked according to their scores in this round. The rankings and recommendations will then be forwarded to the Administrator for final review and selection.

Decisions on grant awards will be made by the RUS Administrator based on the application, and the rankings and recommendations of the rating panel.

The Administrator will fund grant requests in rank order to the extent of available funds. If sufficient funds are not available to fund the next ranked project, the Administrator may, in his sole discretion, skip over that project to the next ranking project that can be fully funded with available funding.

1. Scoring Criteria

The RUS will use the selection criteria described in this NOFA to evaluate and rate applications. Applications will be reviewed in two rounds, the first round determines eligibility and the second round scores the application.

A. Determining Eligibility

To determine if the project is eligible, RUS will look only at the three page document, Part B: Grant Eligibility, which is described in this NOFA and includes narrative on the Project, Applicant, and Community eligibility. No points will be awarded in this round of review. The application is only determined to be eligible or not eligible. Applicants that are determined to be ineligible will be notified and have 10 days to appeal the decision.

B. Scoring Eligible Applicants for the High Energy Cost Grant Program

The total possible score is 100, and the applicant will be scored only on Part C: Grant Proposal as described in this NOFA. The following are the scored sections and their associated point totals:

	Points
Executive Summary	0
Project Needs	15
Project Description (Design)	20
Project Goals and Objectives and Project Performance Measures	10
Project Management	25
Management Plan and Schedule, (a subset of Project Management)	*10*
Project Reporting Plan (a subset of Project Management)	*5*
Relevant Organizational Experience (a subset of Project Management)	*5*
Key Staff Experience (a subset of Project Management)	*5*
Regulatory and other approvals	0
Rural Development Initiatives	20
Proposed Project Budget	10
Supplementary Material	0
Total	100

C. Scoring Eligible Applicants for the Bulk Fuel Revolving Fund Grant Program

The total possible score is 100, and the applicant will be scored only on Part C: Grant Proposal as described in this NOFA. The following are the scored sections and their associated point totals:

	Points
Executive Summary	0
Project Needs	15
Project Description (Design)	20
Project Goals and objectives and Project Performance Measures	10
Project Management	25
Management Plan and Schedule, (a subset of Project Management)	*10*
Project Reporting Plan (a subset of Project Management)	*5*
Relevant Organizational Experience (a subset of Project Management)	*10*
Rural development initiatives	20
Proposed Project Budget	10
Supplementary Material	0
Total	100

2. Review and Selection Process

A. Score and Ranking of Applications

Applications will be scored and ranked according to the evaluation criteria and weights referenced above by a panel. The scored and ranked applications and the raters' comments will then be forwarded to the Administrator for review and selection of grant awards.

B. Selection of Grant Awards and Notification of Applicants

The RUS Administrator will review the rankings and recommendations of the applications provided by the rating panel and consistent with the requirements of this NOFA. The Administrator may return any application to the rating panel with written instruction for reconsideration if, in his sole discretion, he finds that the scoring of an application is inconsistent with this NOFA and the directions provided to the rating panel.

Following any adjustments to the project in ranking, as a result of reconsideration, the Administrator will select projects for funding in rank order. If two projects from the same applicant score high enough to potentially receive funding, the Administrator will award funds to the higher of the two scoring projects. No applicant will receive more than one award.

The Administrator may decide based on the recommendations of the rating panel or, in his sole discretion, that a grant award may be made contingent upon the applicant satisfying certain conditions. For example, RUS will not obligate funding for a selected project—such as projects requiring extensive environmental review and mitigation, preparation of detailed site specific engineering studies and designs, or requiring local permitting, or availability of supplemental financing—until any additional conditions are satisfied.

In the event that a selected applicant fails to comply with the conditions within the time set by RUS, the award will be terminated.

The RUS will notify each applicant in writing whether or not it has been selected for an award. The RUS written notice to a successful applicant of the amount of the grant award based on the approved application will constitute RUS's acceptance of a project for an award, subject to compliance with all post-award requirements including but not limited to completion of any environmental reviews and execution of a grant agreement satisfactory to the RUS. This acceptance does not bind the Government to making a final grant

award. Only an agreement executed by the Administrator will constitute a binding obligation and commitment of Federal funds. Funds will not be awarded or disbursed until all requirements have been satisfied and are contingent on the continued availability of funds at the time of the award. The RUS will advise selected applicants of additional requirements or conditions.

VII. Award Administration Information

1. Award Notices

The RUS will notify all applicants in writing whether they have been selected for an award. Successful applicants will be advised in writing of their selection. Successful applicants will be required to execute an RUS grant agreement and complete additional grant forms and certifications required by USDA as part of the process.

Depending on the nature of the activities proposed by the application, the grantee may be asked to provide information and certifications necessary for compliance with RUS' Environmental Policies and Procedures at 7 CFR part 1794. Following completion of the environmental review process, selected applicants will receive a letter articulating the grant agreement and asked to execute a letter of intent to meet the grant conditions. Grant funds will not be advanced unless and until the applicant has executed a grant agreement and funds will not be advanced until all conditions have been satisfied in a manner satisfactory to RUS.

2. Administrative and National Policy Requirements

A. Environmental Review and Restriction on Certain Activities

Grant awardees will be required to submit the appropriate environmental review documentation, as outlined in the environmental report and any other following environmental impact analyses required by RUS Environmental Policies and Procedures. (7 CFR Part 1794) Grantees must also agree to comply with any other Federal or State environmental laws and regulations applicable to the grant project.

In accordance with § 1794.15, applicants are restricted from taking actions that may have an adverse environmental impact or limit the choice of alternatives being considered until the environmental review process is concluded. If an applicant takes such actions, RUS will not advance or award grant funds. If the proposed grant project involves physical development activities or property acquisition, the applicant is generally prohibited from acquiring, rehabilitating, converting, leasing, repairing or constructing property or facilities, or committing or expending RUS or non-RUS funds for proposed grant activities until the RUS has completed any environmental review in accordance with 7 CFR part 1794 or determined that no environmental review is required.

Successful applicants will be advised whether additional environmental review requirements apply to their proposals.

B. Other Federal Requirements

Other Federal statutes and regulations apply to grant applications and to grant awards. These include, but are not limited to, requirements under 7 CFR part 15, subpart A—Nondiscrimination in Federally Assisted Programs of the Department of Agriculture—Effectuation of Title VI of the Civil Rights Act of 1964.

Certain Office of Management and Budget (OMB) circulars also apply to USDA grant programs and must be followed by a grantee under this program. The policies, guidance, and requirements of the following, or their successors, may apply to the award, acceptance and use of assistance under this program and to the remedies for noncompliance, except when inconsistent with the provisions of the Agriculture, Rural Development and Related Agencies' Appropriations Acts, other Federal statutes or the provisions of this NOFA:

- OMB Circular No. A–87 (Cost Principles Applicable to Grants, Contracts and Other Agreements with State and Local Governments);
- OMB Circular A–21 (Cost Principles for Education Institutions);
- OMB Circular No. A–122 (Cost Principles for Nonprofit Organizations);
- OMB Circular A–133 (Audits of States, Local Governments, and Non-Profit Organizations);
- 7 CFR part 3015 (Uniform Federal Assistance Regulations);
- 7 CFR part 3016 (Uniform Administrative Requirements for Grants and Cooperative Agreements to State, Local, and Federally recognized Indian Tribal governments);
- 2 CFR part 417 (Government-wide debarment and suspension (non-procurement));
- 2 CFR part 421 (Government-wide requirements for drug-free workplace (grants));
- 7 CFR part 3018 (New restrictions on Lobbying);
- 7 CFR part 3019 (Uniform administrative requirements for grants and Agreements with Institutions of Higher Education, Hospitals, and other Non-Profit Organizations); and
- 7 CFR part 3052 (Audits of States, local governments, and non-profit organizations).

Compliance with additional OMB Circulars or government-wide regulations may be specified in the grant agreement.

3. Reporting

The grantee will be required to provide periodic financial and performance reports under USDA grant regulations and program rules and to submit a final project performance report. The nature and frequency of required reports is established in USDA grant regulations and the project-specific grant agreements.

The applicant must have the necessary processes and systems in place to comply with the reporting requirements for first-tier sub-awards and executive compensation under the Federal Funding Accountability and Transparency Act of 2006 in the event the applicant receives funding unless such applicant is exempt from such reporting requirements pursuant to 2 CFR part 170, § 170.110(b). The reporting requirements under the Transparency Act pursuant to 2 CFR part 170 are as follows:

a. First Tier Sub-Awards of $25,000 or more in non-Recovery Act funds (unless they are exempt under 2 CFR part 170) must be reported by the Recipient to *http://www.fsrs.gov* no later than the end of the month following the month the obligation was made. Please note that currently underway is a consolidation of eight federal procurement systems, including the Sub-award Reporting System (FSRS), into one system, the System for Award Management (SAM). As a result, the FSRS will soon be consolidated into and accessed through *https://www.sam.gov/portal/public/SAM/*.

b. The Total Compensation of the Recipient's Executives (5 most highly compensated executives) must be reported by the Recipient (if the Recipient meets the criteria under 2 CFR part 170) to *https://www.sam.gov/portal/public/SAM/* by the end of the month following the month in which the award was made.

C. Total Compensation of the Subrecipient's Executives

The Total Compensation of the Subrecipient's Executives (5 most highly compensated executives) must be reported by the Subrecipient (if the Subrecipient meets the criteria under 2 CFR Part 170) to the Recipient by the

end of the month following the month in which the subaward was made.

VIII. Agency Contacts

The RUS Contact for this grant announcement is Kristi Kubista-Hovis, Senior Policy Advisor, Rural Utilities Service, Electric Programs, United States Department of Agriculture, 1400 Independence Avenue SW., STOP 1560, Room 5165 South Building, Washington, DC 20250–1560. Telephone (202) 720–9545, Fax (202) 690–0717, email *Kristi.Kubista-Hovis@wdc.usda.gov.*

Dated: May 1, 2014.

John C. Padalino,

Administrator, Rural Utilities Service.

[FR Doc. 2014–12690 Filed 5–30–14; 8:45 am]

BILLING CODE P

DEPARTMENT OF COMMERCE

National Oceanic and Atmospheric Administration

Proposed Information Collection; Comment Request; Gulf of Alaska Ecosystem Indicator Selection

AGENCY: National Oceanic and Atmospheric Administration, Commerce.

ACTION: Notice.

SUMMARY: The Department of Commerce, as part of its continuing effort to reduce paperwork and respondent burden, invites the general public and other Federal agencies to take this opportunity to comment on proposed and/or continuing information collections, as required by the Paperwork Reduction Act of 1995.

DATES: Written comments must be submitted on or before August 1, 2014.

ADDRESSES: Direct all written comments to Jennifer Jessup, Departmental Paperwork Clearance Officer, Department of Commerce, Room 6616, 14th and Constitution Avenue NW., Washington, DC 20230 (or via the Internet at *JJessup@doc.gov).*

FOR FURTHER INFORMATION CONTACT: Requests for additional information or copies of the information collection instrument and instructions should be directed to Stephani Zador, (206) 526–4693) or *stephani.zador@noaa.gov.*

SUPPLEMENTARY INFORMATION:

I. Abstract

This request is for a new information collection.

The goal of this project is to select a short (8–10) list of ecosystem indicators for the Gulf of Alaska that will form the basis of a Gulf of Alaska (GOA) Report Card and Ecosystem Assessment to include in the NOAA's Ecosystem Considerations report. This report is produced annually as part of the Stock Assessment and Fishery Evaluation report for the North Pacific Fishery Management Council. The format of the new GOA Report Card and Ecosystem Assessment will be similar to those that have been produced in recent years for the eastern Bering Sea and Aleutian Islands.

The primary recipients, considered to be the stakeholders, of the Report Card and Ecosystem Assessment are those involved with the fishery quota-setting process for the North Pacific Fisheries Management Council. This includes the Science and Statistical Committee and the regional Plan Teams, which of are composed of mainly federal and state scientists, academics, and other individuals. Additional recipients include the Advisory Panel, Council, and stock assessment scientists. The Report Card and Ecosystem Assessment are also made available to the public.

For the purposes of this project, ecosystem indicators are defined as time-series of data that measure some component of the ecosystem. Hundreds of indicators are available for the GOA, which is defined as the Canadian-US boundary at Dixon Entrance to the east and False Pass to the west. During a workshop in 2010, a group of largely scientists and some fisheries managers with expertise in the eastern Bering Sea ecosystem selected 10 indicators to best represent trends in productivity in the eastern Bering Sea. In 2011, a more diverse group including a commercial fisherman and conservation non-governmental organization representative met in a similar workshop format to select 8 ecosystem indicators for the Aleutian Islands that best characterized trends in variability throughout the ecosystem. For the GOA, we hope to increase the group size and diversity in GOA expertise of the participants in the indicator selection process by soliciting information individually via an online survey. The main objective of the survey is to have participants rank the importance of ecosystem indicators among lists of indicators that are presented; the surveys will then be compiled to generate a list of top indicators. We have developed a non-exhaustive list of about 75 ecosystem indicators that are grouped by categories based on ecosystem components, such as forage fish or seabirds. Participants will be asked to select the top three within each category, then the top ten among all categories. Space is provided for suggestions of additional indicators not included. We will use these rankings to form the basis of a new GOA report card and ecosystem assessment. We hope that by surveying a greater number of individuals than were involved with indicator selection for the eastern Bering Sea and Aleutian Islands, the survey results will reflect broader expertise and an 'equal voice' from all participants.

The GOA is characterized by topographical complexity, including: Islands; deep sea mounts; continental shelf interrupted by large gullies; and varied and massive coastline features such as the Cook Inlet, Prince William Sound, Copper River, and Cross Sound, which bring both freshwater and nutrients into the GOA. The topographical complexity leads to ecological complexity, such that species richness and diversity differ from the western to eastern GOA. Thus, local effects of ecosystem drivers may swamp basin-wide signals. With this in mind, we hope to create a short list of ecosystem indicators that best reflect the complexity of the GOA.

II. Method of Collection

Respondents will be asked to fill out an online survey.

III. Data

OMB Control Number: 0648-xxxx.

Form Number: None.

Type of Review: Regular submission (request for a new information collection).

Affected Public: Individuals or households; non-profit institutions; State, local, or tribal government; business or other for-profit organizations.

Estimated Number of Respondents: 100.

Estimated Time Per Response: 30 minutes.

Estimated Total Annual Burden Hours: 50.

Estimated Total Annual Cost to Public: $0 in recordkeeping/reporting costs.

IV. Request for Comments

Comments are invited on: (a) Whether the proposed collection of information is necessary for the proper performance of the functions of the agency, including whether the information shall have practical utility; (b) the accuracy of the agency's estimate of the burden (including hours and cost) of the proposed collection of information; (c) ways to enhance the quality, utility, and clarity of the information to be collected; and (d) ways to minimize the burden of the collection of information on respondents, including through the

use of automated collection techniques or other forms of information technology.

Comments submitted in response to this notice will be summarized and/or included in the request for OMB approval of this information collection; they also will become a matter of public record.

Dated: May 28, 2014.

Gwellnar Banks,

Management Analyst, Office of the Chief Information Officer.

[FR Doc. 2014–12668 Filed 5–30–14; 8:45 am]

BILLING CODE 3510–22–P

DEPARTMENT OF COMMERCE

Foreign-Trade Zones Board

[B–11–2014]

Foreign-Trade Zone 87—Lake Charles, Louisiana, Authorization of Production Activity, LEEVAC Shipyards, LLC (Shipbuilding), Lake Charles and Jennings, Louisiana

On January 27, 2014, the Lake Charles Harbor and Terminal District, grantee of FTZ 87, submitted a notification of proposed production activity to the Foreign-Trade Zones (FTZ) Board on behalf of LEEVAC Shipyards, LLC, in Lake Charles and Jennings, Louisiana.

The notification was processed in accordance with the regulations of the FTZ Board (15 CFR part 400), including notice in the **Federal Register** inviting public comment (79 FR 8679–8680, February 13, 2014). The FTZ Board has determined that no further review of the activity is warranted at this time. The production activity described in the notification is authorized, subject to the FTZ Act and the FTZ Board's regulations, including Section 400.14, and the following special conditions:

1. Any foreign steel mill product admitted to the subzone, including plate, angles, shapes, channels, rolled steel stock, bars, pipes and tubes, not incorporated into merchandise otherwise classified, and which is used in manufacturing, shall be subject to customs duties in accordance with applicable law, unless the Executive Secretary determines that the same item is not then being produced by a domestic steel mill.

2. LEEVAC Shipyards, LLC, shall meet its obligation under 15 CFR 400.13(b) by annually advising the Board's Executive Secretary as to significant new contracts with appropriate information concerning foreign purchases otherwise dutiable, so that the Board may consider whether any foreign dutiable items are being imported for manufacturing in the subzone primarily because of FTZ procedures and whether the Board should consider requiring customs duties to be paid on such items.

Dated: May 27, 2014.

Andrew McGilvray,

Executive Secretary.

[FR Doc. 2014–12708 Filed 5–30–14; 8:45 am]

BILLING CODE 3510–DS–P

DEPARTMENT OF COMMERCE

Foreign-Trade Zones Board

[B–4–2014]

Foreign-Trade Zone 221—Mesa, Arizona, Authorization of Production Activity, Apple Inc./GT Advanced Technologies Inc., (Components for Consumer Electronics), Mesa, Arizona

On January 23, 2014, Apple Inc./GT Advanced Technologies Inc. submitted a notification of proposed production activity to the Foreign-Trade Zones (FTZ) Board for its facility within Subzone 221A, in Mesa, Arizona.

The notification was processed in accordance with the regulations of the FTZ Board (15 CFR part 400), including notice in the **Federal Register** inviting public comment (79 FR 4661, 1–29–2014). The FTZ Board has determined that no further review of the activity is warranted at this time. The production activity described in the notification is authorized, subject to the FTZ Act and the Board's regulations, including Section 400.14.

Dated: May 28, 2014.

Andrew McGilvray,

Executive Secretary.

[FR Doc. 2014–12727 Filed 5–30–14; 8:45 am]

BILLING CODE 3510–DS–P

DEPARTMENT OF COMMERCE

Foreign-Trade Zones Board

[Docket 35–2011]

Proposed Foreign-Trade Zone—Eloy, Arizona; Amendment of Application

A request has been submitted to the Foreign-Trade Zones Board (the Board) by Tucson Regional Economic Opportunities (TREO), grantee of Foreign-Trade Zone 174, located in Tucson, Arizona, at the request of the City of Eloy, to amend the City's pending application requesting authority to establish a new general-purpose zone in Eloy, Arizona.

TREO is requesting authority to include the four sites originally proposed for FTZ designation as part of a new zone in Eloy, Arizona (FTZ Board Docket B–35–2011, 76 FR 30907, 05/27/2011 and 77 FR 62216–62217, 10/12/2012) as additional magnet sites of FTZ 174, adjacent to the Tucson, Arizona, U.S. Customs and Border Protection port of entry.

The proposed sites are as follows: *Site 1* (81 acres)—two parcels located at the intersection of Houser Road and Eleven Mile Corner Road, Eloy; *Site 2* (277 acres)—Sunshine Industrial Park, located at the intersection of Interstate 10 and Sunshine Boulevard, Eloy; *Site 3* (279 acres)—Toltec Business Park, located at the intersection of Houser Road and Toltec Road, Eloy; and, *Site 4* (293 acres)—Red Rock Industrial Park, located along Interstate 10 and the Union Pacific Railroad line opposite Sasco Road, Red Rock. The sites are owned by the City of Eloy (Site 1), Walton International Group (USA), Inc. and Walton Arizona, LLC (Site 2), Walton International Group (USA), Inc. (Site 3) and Walton International Group (USA), Inc. and Walton Arizona, LLC (Site 4). If approved, the sites being proposed would be assigned new site numbers under FTZ 174.

Public comment is invited from interested parties. Submissions shall be addressed to the Board's Executive Secretary at: Foreign-Trade Zones Board, U.S. Department of Commerce, Room 21013, 1401 Constitution Ave. NW., Washington, DC 20230.

The closing period for their receipt is July 2, 2014. Rebuttal comments in response to material submitted during the foregoing period may be submitted during the subsequent 15-day period (to July 17, 2014).

A copy of the application amendment will be available for public inspection at the Office of the Executive Secretary, Foreign-Trade Zones Board, Room 21013, U.S. Department of Commerce, 1401 Constitution Avenue NW., Washington, DC 20230–0002, and in the ''Reading Room'' section of the FTZ Board's Web site, which is accessible via *www.trade.gov/ftz.*

FOR FURTHER INFORMATION CONTACT: Christopher Kemp at *Christopher.Kemp@trade.gov* or (202) 482–0862.

Dated: May 21, 2014.

Andrew McGilvray,

Executive Secretary.

[FR Doc. 2014–12704 Filed 5–30–14; 8:45 am]

BILLING CODE 3510–DS–P

DEPARTMENT OF COMMERCE

Foreign-Trade Zones Board

[S–63–2014]

Foreign-Trade Zone 163—Ponce, Puerto Rico; Application for Subzone; Correa Tire Distributor, Inc.; Dorado, Puerto Rico

An application has been submitted to the Foreign-Trade Zones Board (the Board) by CODEZOL, C.D., grantee of FTZ 163, requesting subzone status for the facility of Correa Tire Distributor, Inc., located in Dorado, Puerto Rico. The application was submitted pursuant to the provisions of the Foreign-Trade Zones Act, as amended (19 U.S.C. 81a–81u), and the regulations of the Board (15 CFR part 400). It was formally docketed on May 22, 2014.

The proposed subzone (1.16 acres) is located at Carretera #2 KM 26.7, Barrio Espinosa, Dorado. No authorization for production activity has been requested at this time. The proposed subzone would be subject to the existing activation limit of FTZ 163.

In accordance with the Board's regulations, Camille Evans of the FTZ Staff is designated examiner to review the application and make recommendations to the Executive Secretary.

Public comment is invited from interested parties. Submissions shall be addressed to the Board's Executive Secretary at the address below. The closing period for their receipt is July 14, 2014. Rebuttal comments in response to material submitted during the foregoing period may be submitted during the subsequent 15-day period to July 28, 2014.

A copy of the application will be available for public inspection at the Office of the Executive Secretary, Foreign-Trade Zones Board, Room 21013, U.S. Department of Commerce, 1401 Constitution Avenue NW, Washington, DC 20230–0002, and in the ''Reading Room'' section of the Board's Web site, which is accessible via *www.trade.gov/ftz.*

For further information, contact Camille Evans at *Camille.Evans@trade.gov* or (202) 482–2350.

Dated: May 22, 2014.

Andrew McGilvray,

Executive Secretary.

[FR Doc. 2014–12706 Filed 5–30–14; 8:45 am]

BILLING CODE 3510–DS–P

DEPARTMENT OF COMMERCE

International Trade Administration

[A–570–918]

Steel Wire Garment Hangers from the People's Republic of China: Final Results of Antidumping Duty Administrative Review and New Shipper Review, 2011–2012

AGENCY: Enforcement and Compliance, International Trade Administration, Department of Commerce.

SUMMARY: On November 25, 2013, the Department of Commerce (''the Department'') published the *Preliminary Results* of the fourth administrative review and new shipper review (''NSR'') of the antidumping duty order on steel wire garment hangers from the People's Republic of China (''PRC'').[1] We invited parties to comment on the *Preliminary Results.* Based on our analysis of the comments and information received, we made changes to the final margin calculations of Shanghai Wells Hanger Co., Ltd. (''Shanghai Wells'') [2] and Hangzhou Yingqing Material Co. Ltd. (''Yingqing''), as noted below. Listed below in the ''Final Results of the Administrative and New Shipper Reviews'' section of this notice are the final dumping margins. The period of review (''POR'') is October 1, 2011, through September 31, 2012.

DATES: *Effective Date:* June 2, 2014.

FOR FURTHER INFORMATION CONTACT: Frances Veith or Josh Startup, AD/CVD Operations, Office V, Enforcement and Compliance, International Trade Administration, Department of Commerce, 14th Street and Constitution Avenue NW., Washington, DC 20230; telephone: (202) 482–4295 or (202) 482–5260, respectively.

SUPPLEMENTARY INFORMATION:

Background

The Department published the *Preliminary Results* on November 25, 2013. Between January 6, 2014, and January 16, 2014, interested parties submitted surrogate value (''SV'') data for consideration in the final results. The Department conducted the verification of Shanghai Wells on December 10 through 13, 2013, in Shanghai, China, and December 16, through 18, 2013, in Hong Kong.[3] On February 24, 2014, M&B Metal Products Inc. (''Petitioner'') and Fabriclean Supply Inc. (''Fabriclean''), a U.S. importer and wholesaler, submitted case briefs in the administrative review; and Petitioner and Hangzhou Yingqing Material Co. Ltd. (''Yingqing'') submitted case briefs in the NSR. On March 4, 2014, Petitioner and Fabriclean submitted rebuttal briefs in the administrative review; and Petitioner and Yingqing submitted rebuttal case briefs in the NSR. On January 15, 2014, the Department extended the final results to May 27, 2014.[4]

Scope of the Order

The merchandise that is subject to the order is steel wire garment hangers. The products subject to the order are currently classified under U.S. Harmonized Tariff Schedule (''HTSUS'') subheadings 7326.20.0020, 7323.99.9060, and 7323.99.9080. Although the HTSUS subheadings are provided for convenience and customs purposes, the written description of the merchandise remains dispositive. A full description of the scope of the order is contained in the Issues and Decision Memorandum,[5] which is hereby adopted by this notice.

Respondent Selection

On December 13, 2012, Petitioner submitted comments on respondent selection that also included allegations pertaining to certain shipments of

[1] *See Steel Wire Garment Hangers From the People's Republic of China: Preliminary Results of Antidumping Duty Administrative Review and New Shipper Review; 2011–2012,* 78 FR 70271 (November 25, 2013) (''*Preliminary Results*'').

[2] The Department previously found that Shanghai Wells Hanger Co., Ltd. (''Shanghai Wells''), Hong Kong Wells Ltd. (''HK Wells'') and Hong Kong Wells Ltd. (USA) (''Wells USA'') are affiliated and that Shanghai Wells and HK Wells comprise a single entity. Because there were no changes in this review to the facts that supported that decision, we continue to find Shanghai Wells, HK Wells, and USA Wells are affiliated and that Shanghai Wells and HK Wells comprise a single entity. *See Steel Wire Garment Hangers From the People's Republic of China: Preliminary Results and Preliminary Rescission, in Part, of the First Antidumping Duty Administrative Review,* 75 FR 68758, 68761 (November 9, 2010), unchanged in *First Administrative Review of Steel Wire Garment Hangers From the People's Republic of China: Final Results and Final Partial Rescission of Antidumping Duty Administrative Review,* 76 FR 27994, 27996 (May 13, 2011).

[3] *See* the Department's Memorandum titled, ''Verification of the Sales and Factors Responses of Shanghai Wells Hangers Co., Ltd. (''Shanghai Wells'') in the Administrative Review of the Antidumping Duty Order on Steel Wire Garment Hangers (''Hangers'') from the People's Republic of China,'' dated January 27, 2014.

[4] *See* the Department's Memorandum titled, ''Steel Wire Garment Hangers from the People's Republic of China: Extension of Deadline for Final Results of Antidumping Duty Administrative Review and New Shipper Review,'' dated January 15, 2014.

[5] *See* the Department's Memorandum, titled ''Steel Wire Garment Hangers from the People's Republic of China: Issues and Decision Memorandum for the Final Results of the Fourth Antidumping Duty Administrative Review and New Shipper Review'' dated concurrently with this notice (''Issues and Decision Memorandum'').

subject merchandise that entered during the POR. Petitioner questions whether the antidumping duty rate applied to these shipments upon entry is correct.[6] The Department intends to refer this information to U.S. Customs and Border Protection (''CBP'') for further investigation.

Analysis of Comments Received

All issues raised in the case and rebuttal briefs by interested parties in these reviews are addressed in the Issues and Decision Memorandum. A list of the issues which parties raised is attached to this notice as an Appendix. The Issues and Decision Memorandum is a public document and is on file in the Central Records Unit (''CRU''), Room 7046 of the main Department of Commerce building, as well as electronically via Enforcement and Compliance's Antidumping and Countervailing Duty Centralized Electronic Service System (''IA ACCESS''). IA ACCESS is available to registered users at *http://iaaccess.trade.gov* and in the CRU. In addition, a complete version of the Issues and Decision Memorandum can be accessed directly on the internet at *http://www.trade.gov/enforcement/.* The signed Issues and Decision Memorandum and the electronic versions of the Issues and Decision Memorandum are identical in content.

Changes Since the Preliminary Results

Based on comments parties submitted regarding our *Preliminary Results,* we made changes to the surrogate financial ratio calculations for both respondents, the steel wire rod SV for Shanghai Wells, and the hydrochloric acid SV for Yingqing.[7] Additionally, we used the importer field to calculate Shanghai Wells' importer-specific assessment rates.[8]

Non-Market Economy Country

The Department treated the PRC as a non-market economy (''NME'') in every proceeding conducted by the Department. In accordance with section 771(18)(C)(i) of the Tariff Act of 1930, as amended (''the Act''), any determination that a foreign country is an NME shall remain in effect until revoked by the administering authority. The Department has not revoked the PRC's status as an NME and, accordingly, we applied the NME methodology.

Separate Rates

In the *Preliminary Results,* the Department determined that Shanghai Wells and the new shipper, Yingqing, met the criteria for separate rate status.[9] At that time, seven companies failed to respond to the Department's request for information and/or declined to participate in the administrative review.[10] Therefore, the Department also determined that the following seven companies failed to demonstrate their eligibility for a separate rate: (1) Shaoxing Dingli Metal Clotheshorse Co., Ltd., (2) Shaoxing Tongzhou Metal Manufactured Co., Ltd., (3) Shaoxing Andrew Metal Manufactured Co., Ltd., (4) Shaoxing Gangyuan Metal Manufacture, (5) Shaoxing Shunji Metal Clotheshorse Co., Ltd., (6) Shaoxing Guochao Metallic Products Co., Ltd., and (7) Ningbo Dasheng Hanger Ind. Co., Ltd.[11] Additionally, the Department preliminarily determined that, because Shanghai Jianhai International Trade Co., Ltd. (''Jianhai'') and Hangzhou Qingqing Mechanical Co. Ltd. (''Qingqing'') did not file a separate rate application or certification, or a no shipments certification, Jianhai and Qingqing did not demonstrate their eligibility for a separate rate, and are also part of the PRC-wide entity.[12]

We have not received any information since the issuance of the *Preliminary Results* that provides a basis for reconsideration of these determinations. Therefore, the Department continues to find that only Yingqing and Shanghai Wells satisfy the criteria for a separate rate.

PRC-wide Entity and the PRC-wide Rate

In the *Preliminary Results,* we determined that those companies which did not demonstrate eligibility for a separate rate are part of the PRC-wide Entity.[13] Since the *Preliminary Results,* none of the companies which did not file separate-rate applications or certifications submitted comments regarding this finding. Therefore, we continue to treat these entities as part of the PRC-wide Entity.

Further, in the *Preliminary Results,* seven of the companies the Department selected as mandatory respondents in the administrative review failed to respond to the Department's requests for information and/or declined to participate in this review.[14] These companies, therefore, are not eligible for separate-rate status.[15] Accordingly, the Department determines that the PRC-wide entity includes these seven companies. We also continue to find the PRC-wide entity continues to include the 10 companies Petitioner submitted a timely request for withdraw of review, but which did not have a separate rate.[16]

In addition, in the *Preliminary Results,* the Department calculated the PRC-wide Entity Rate using adverse facts available (''AFA'') because: (1) The PRC-wide Entity, which includes these seven companies, withheld requested information, failed to provide information in a timely manner and in the form requested, and significantly impeded this proceeding, and (2) the PRC-wide Entity, which includes these seven companies, failed to cooperate to the best of its ability.[17] In so doing, and consistent with our practice, the Department relied upon the highest rate on the record of any segment of the proceeding, *i.e.,* 187.25 percent.[18] The Department also corroborated that rate, consistent with section 776(c) of the Act.[19] Since the *Preliminary Results,* no interested party submitted any evidence or comments that challenge the Department's determination of the PRC-wide Rate. Therefore, we will continue to apply a rate of 187.25 percent to the PRC-wide Entity.

Final Results of the Administrative and New Shipper Reviews

Regarding the administrative review, the following weighted-average dumping margins exist for the period

[6] *See* Letter from Petitioner to the Secretary of Commerce ''Comments on Respondent Selection'' (December 13, 2012) at 3–4 and Exhibit 3.

[7] *See* Issues and Decision Memorandum, at Comments 2, 4, 7, 8, and 9.

[8] *Id.,* at Comment 12.

[9] *See Preliminary Results,* and accompanying Preliminary Decision Memorandum at 9–10.

[10] *Id.,* 78 FR at 70272.

[11] *Id.*

[12] *Id.*

[13] *Id.*

[14] These seven companies are: (1) Shaoxing Dingli Metal Clotheshorse Co., Ltd., (2) Shaoxing Tongzhou Metal Manufactured Co., Ltd., (3) Shaoxing Andrew Metal Manufactured Co., Ltd., (4) Shaoxing Gangyuan Metal Manufacture, (5) Shaoxing Shunji Metal Clotheshorse Co., Ltd., (6) Shaoxing Guochao Metallic Products Co., Ltd., and (7) Ningbo Dasheng Hanger Ind. Co., Ltd.

[15] *See Initiation of Antidumping and Countervailing Duty Administrative Reviews and Request for Revocation in Part,* 77 FR 71575 (December 3, 2012).

[16] *See Preliminary Results,* and accompanying Preliminary Decision Memorandum at PRC-wide Entity section. The ten companies are: Liaoning Metals & Mineral Imp/Exp Corp., Shanghai Guoxing Metal Products Co. Ltd., Shanghai Lian Development Co. Ltd., Shanghai Shuang Qiang Embroidery Factory, Shangyu Baoxiang Metal Manufactured Co. Ltd., Shang Zhou Leather Shoes Plant, Shaoxing Shuren Tie Co., Ltd., Shaoxing Zhongbao Metal Manufactured Co., Ltd., Shaoxing Zhongdi Foreign Trade Co., Ltd., Zhejiang Lucky Cloud Hanger Co., Ltd.

[17] *See* sections 776(a)(2)(A), (B), (C) and 776(b) of the Act.

[18] *Id.*

[19] *See Preliminary Results,* and accompanying Preliminary Decision Memorandum at ''Corroboration of Information'' section.

October 1, 2011, through September 30, 2012:

Exporter	Weighted-average margin (%)
Shanghai Wells Hanger Co., Ltd.[20]	2.52
PRC-wide Entity[21]	187.25

Regarding the NSR, the following weighted-average dumping margin exists for the period October 1, 2011, through September 30, 2012:

Exporter	Producer	Weighted-average margin (%)
Hangzhou Yingqing Material Co. Ltd.	Hangzhou Qingqing Mechanical Co. Ltd.	40.99

Disclosure

We will disclose the calculations performed within five days of the date of publication of this notice to parties in this proceeding in accordance with 19 CFR 351.224(b).

Assessment Rates

Pursuant to section 751(a)(2)(A) of the Act and 19 CFR 351.212(b), the Department will determine, and CBP shall assess, antidumping duties on all appropriate entries of subject merchandise in accordance with the final results of this review. The Department intends to issue assessment instructions to CBP 15 days after the date of publication of these final results of review.

Where the respondent reported reliable entered values, we calculated importer (or customer)-specific *ad valorem* rates by aggregating the dumping margins calculated for all U.S. sales to each importer (or customer) and dividing this amount by the total entered value of the sales to each importer (or customer).[22] Where the Department calculated a weighted-average dumping margin by dividing the total amount of dumping for reviewed sales to that party by the total sales quantity associated with those transactions, the Department will direct CBP to assess importer-specific assessment rates based on the resulting per-unit rates.[23] Where an importer- (or customer-) specific *ad valorem* or per-unit rate is greater than *de minimis,* the Department will instruct CBP to collect the appropriate duties at the time of liquidation.[24] Where an importer- (or customer-) specific *ad valorem* or per-unit rate is zero or *de minimis,* the Department will instruct CBP to liquidate appropriate entries without regard to antidumping duties.[25]

The Department announced a refinement to its assessment practice in non-market economy cases. Pursuant to this refinement in practice, for entries that were not reported in the U.S. sales databases submitted by companies individually examined during this review, the Department will instruct CBP to liquidate such entries at the PRC-wide rate. Additionally, if the Department determines that an exporter had no shipments of the subject merchandise, any suspended entries that entered under that exporter's case number (*i.e.,* at that exporter's rate) will be liquidated at the PRC-wide rate.[26]

Cash Deposit Requirements

The following cash deposit requirements will be effective upon publication of the final results of these reviews for shipments of the subject merchandise from the PRC entered, or withdrawn from warehouse, for consumption on or after the publication date, as provided by section 751(a)(2)(C) of the Act: (1) For the companies listed above, the cash deposit rate will be established in the final results of these reviews (except, if the rate is zero or *de minimis,* then zero cash deposit will be required); (2) for previously investigated or reviewed PRC and non-PRC exporters not listed above that received a separate rate in a prior segment of this proceeding, the cash deposit rate will continue to be the exporter-specific rate published for the most recent period; (3) for all PRC exporters of subject merchandise that have not been found to be entitled to a separate rate, the cash deposit rate will be the PRC-wide rate of 187.25 percent; and (4) for all non-PRC exporters of subject merchandise which have not received their own rate, the cash deposit rate will be the rate applicable to the PRC exporter that supplied that non-PRC exporter.

With respect to Yingqing, the NSR respondent, the Department established a combination cash deposit rate for this company consistent with its practice as follows: (1) For subject merchandise produced by Qingqing and exported by Yingqing, the cash deposit rate will be the rate established for Yingqing in the final results of the NSR; (2) for subject merchandise exported by Yingqing, but not produced by Qingqing, the cash deposit rate will be the rate for the PRC-wide entity; and (3) for subject merchandise produced by Qingqing but not exported by Yingqing, the cash deposit rate will be the rate applicable to the exporter.

These deposit requirements, when imposed, shall remain in effect until further notice.

Notification to Importers

This notice also serves as a final reminder to importers of their responsibility under 19 CFR 351.402(f)(2) to file a certificate regarding the reimbursement of antidumping duties prior to liquidation of the relevant entries during this review period. Failure to comply with this requirement could result in the Department's presumption that reimbursement of antidumping duties occurred and the subsequent assessment of double antidumping duties.

Administrative Protective Orders

This notice also serves as a reminder to parties subject to administrative protective order (''APO'') of their responsibility concerning the return or destruction of proprietary information

[20] Shanghai Wells consists of Shanghai Wells Hanger Co., Ltd., and Hong Kong Wells Ltd.

[21] The PRC-wide entity includes all companies for which the Department initiated a review but did not establish their eligibility for a separate rate: (1) Shaoxing Dingli Metal Clotheshorse Co., Ltd., (2) Shaoxing Tongzhou Metal Manufactured Co., Ltd., (3) Shaoxing Andrew Metal Manufactured Co., Ltd., (4) Shaoxing Gangyuan Metal Manufacture, (5) Shaoxing Shunji Metal Clotheshorse Co., Ltd., (6) Shaoxing Guochao Metallic Products Co., Ltd., (7) Shanghai Jianhai International Trade Co., Ltd., (8) Ningbo Dasheng Hanger Ind. Co., Ltd., (9) Liaoning Metals & Mineral Imp/Exp Corp., (10) Shanghai Guoxing Metal Products Co. Ltd., (11) Shanghai Lian Development Co. Ltd., (12) Shanghai Shuang Qiang Embroidery Factory, (13) Shangyu Baoxiang Metal Manufactured Co. Ltd., (14) Shang Zhou Leather Shoes Plant, (15) Shaoxing Shuren Tie Co., Ltd., (16) Shaoxing Zhongbao Metal Manufactured Co., Ltd., (17) Shaoxing Zhongdi Foreign Trade Co., Ltd., (18) Zhejiang Lucky Cloud Hanger Co., Ltd., and (19) Hangzhou Qingqing Mechanical Co. Ltd.

[22] *See* 19 CFR 351.212(b)(1).

[23] *Id.*

[24] *Id.*

[25] *See* 19 CFR 351.106(c)(2).

[26] *See Non-Market Economy Antidumping Proceedings: Assessment of Antidumping Duties,* 76 FR 65694 (October 24, 2011).

disclosed under APO in accordance with 19 CFR 351.305, which continues to govern business proprietary information in this segment of the proceeding. We request a timely written notification of the return or destruction of APO materials, or conversion to judicial protective order. Failure to comply with the regulations and terms of an APO is a violation which is subject to sanction.

We are issuing and publishing this administrative review and notice in accordance with sections 751(a)(1) and 777(i) of the Act.

Dated: May 27, 2014.

Paul Piquado,

Assistant Secretary for Enforcement and Compliance.

Appendix—Issues and Decision Memorandum

Comment 1: Selection of the Surrogate Country
Comment 2: Selection of Financial Statements
Comment 3: Whether to Apply Fact Available to the Drapery Tubes and Trouser Guards Shipped Separately by Shanghai Wells
Comment 4: Valuation of Wire Rod
Comment 5: Valuation of Brokerage and Handling (''B&H'')
Comment 6: Calculation of Truck Freight
Comment 7: Calculation of Financial Ratios
Comment 8: Valuation of Hydrochloric Acid (''HCL'')
Comment 9: Valuation of Thinner
Comment 10: Valuation of Paint
Comment 11: Valuation of Corrugated Paperboard
Comment 12: Assigning Adverse Facts Available (''AFA'') to the Seven Mandatory Respondents That Failed to Respond to the Department's Questionnaire
Comment 13: Calculating Importer-Specific Assessment Rates Using the Importer Field Rather than the Customer Field
Comment 14: Rejection of Yingqing's Factual Submission After the *Preliminary Results*

[FR Doc. 2014–12730 Filed 5–30–14; 8:45 am]

BILLING CODE 3510–DS–P

DEPARTMENT OF COMMERCE

International Trade Administration

[A–533–847, A–570–934]

1-Hydroxyethylidene-1, 1-Diphosphonic (HEDP) Acid from India and the People's Republic of China: Final Results of Sunset Reviews and Revocation of Antidumping Duty Orders

AGENCY: Enforcement and Compliance, International Trade Administration, Department of Commerce.

SUMMARY: On March 3, 2014, the Department of Commerce (''the Department'') initiated the sunset reviews of the antidumping duty orders on 1-hydroxyethylidene-1, 1-diphosphonic acid (''HEDP'') from India and the People's Republic of China (''PRC''). Because the domestic interested parties did not participate in these sunset reviews, the Department is revoking these antidumping duty orders.

DATES: *Effective Date:* June 2, 2014.

FOR FURTHER INFORMATION CONTACT: Charles Riggle, AD/CVD Operations, Enforcement and Compliance, International Trade Administration, U.S. Department of Commerce, 14th Street and Constitution Avenue NW., Washington, DC 20230; telephone: (202) 482–0650.

SUPPLEMENTARY INFORMATION:

Background

On April 28, 2009, the Department issued antidumping duty orders on HEDP from India and the PRC.[1] On March 3, 2014, the Department initiated sunset reviews of these orders.[2] We did not receive a notice of intent to participate from domestic interested parties in these sunset reviews by the deadline date. As a result, in accordance with 19 CFR 351.218(d)(1)(iii)(A), the Department determined that no domestic interested party intends to participate in these sunset reviews, and on March 24, 2014, we notified the International Trade Commission, in writing, that we intended to issue a final determination revoking these antidumping duty orders.[3]

Scope of the Orders

The merchandise subject to the orders includes all grades of aqueous, acidic (non-neutralized) concentrations of 1-hydroxyethylidene-1, 1-diphosphonic acid,[4] also referred to as hydroxethylidenediphosphonic acid, hydroxyethanediphosphonic acid, acetodiphosphonic acid, and etidronic acid. The CAS (Chemical Abstract Service) registry number for HEDP is 2809–21–4. The merchandise subject to the order is currently classified in the Harmonized Tariff Schedule of the United States (''HTSUS'') at subheading 2931.00.9043. It may also enter under HTSUS subheading 2811.19.6090. While HTSUS subheadings are provided for convenience and customs purposes only, the written description of the scope of the order is dispositive.

Revocation

Pursuant to section 751(c)(3)(A) of the Tariff Act of 1930, as amended (''the Act'') and 19 CFR 351.218(d)(1)(iii)(B)(3), if no domestic interested party files a notice of intent to participate, the Department shall, within 90 days after the initiation of the review, issue a final determination revoking the order. Because no domestic interested party filed a notice of intent to participate, the Department finds that no domestic interested party is participating in these sunset reviews. Therefore, we are revoking the antidumping duty orders on HEDP from India and the PRC.

Effective Date of Revocation

The effective date of revocation is April 28, 2014, the fifth anniversary of the date of publication in the **Federal Register** of these antidumping duty orders. Pursuant to section 751(c)(3)(A) of the Act and 19 CFR 351.222(i)(2)(i), the Department intends to issue instructions to U.S. Customs and Border Protection, 15 days after publication of this notice, to terminate the suspension of liquidation of the merchandise subject to these orders entered, or withdrawn from warehouse, for consumption on or after April 28, 2014. Entries of subject merchandise prior to the effective date of revocation will continue to be subject to suspension of liquidation and antidumping duty deposit requirements. The Department will complete any pending administrative reviews of these orders and will conduct administrative reviews of subject merchandise entered prior to the effective date of revocation in response to appropriately filed requests of review.

These final results of the five-year (sunset) reviews and notice are published in accordance with sections 751(c) and 777(i)(1) of the Act.

Dated: May 21, 2014.

Paul Piquado,

Assistant Secretary for Enforcement and Compliance.

[FR Doc. 2014–12728 Filed 5–30–14; 8:45 am]

BILLING CODE 3510–DS–P

[1] *See 1-Hydroxyethylidene-1, 1-Diphosphonic Acid from India and the People's Republic of China: Antidumping Duty Orders,* 74 FR 19197 (April 28, 2009).

[2] *See Initiation of Five-Year (''Sunset'') Review,* 79 FR 11762 (March 3, 2014).

[3] *See* 19 CFR 351.218(d)(1)(iii)(B)(2). Because the original deadline for notifying the International Trade Commission fell on a Sunday, the deadline for doing so was March 24, 2014. *See Notice of Clarification: Application of ''Next Business Day'' Rule for Administrative Determination Deadlines Pursuant to the Tariff Act of 1930, As Amended,* 70 FR 24533 (May 10, 2005).

[4] $C_2H_8O_7P_2$ or $C(CH_3)(OH)(PO_3H_2)_2$.

DEPARTMENT OF COMMERCE

International Trade Administration

[A–583–843]

Polyethylene Retail Carrier Bags From Taiwan: Affirmative Preliminary Determination of Circumvention of the Antidumping Duty Order

AGENCY: Enforcement and Compliance, International Trade Administration, Department of Commerce.

SUMMARY: The Department of Commerce (the Department) preliminarily determines that imports of unfinished polyethylene retail carrier bags (PRCBs) from Taiwan are circumventing the antidumping duty order on PRCBs from Taiwan.[1] As a result, imports of PRCBs from Taiwan will be subject to suspension of liquidation effective July 31, 2013. Interested parties are invited to comment on this preliminary determination.

DATES: *Effective Date:* June 2, 2014.

FOR FURTHER INFORMATION CONTACT: Hermes Pinilla or Minoo Hatten, Office I, Enforcement and Compliance, International Trade Administration, U.S. Department of Commerce, 14th Street and Constitution Avenue NW., Washington, DC 20230; telephone: (202) 482–3477, and (202) 482–1690, respectively.

SUPPLEMENTARY INFORMATION:

Scope of the Order

The merchandise covered by the *Order* is PRCBs. PRCBs subject to the order are currently classifiable in the Harmonized Tariff Schedule of the United States (HTSUS) at subheading 3923.21.0085. The HTSUS subheading is provided for convenience and customs purposes.[2] The written description is dispositive.

The Preliminary Decision Memorandum is a public document and can be accessed directly on the Internet at *http://enforcement.trade.gov/frn/index.html.* In addition, the Preliminary Decision Memorandum is on file electronically *via* Enforcement and Compliance's Antidumping and Countervailing Duty Centralized Electronic Service System (IA ACCESS). Access to IA ACCESS is available to registered users at *http://iaaccess.trade.gov,* and it is available to all parties in the Central Records Unit, room 7046 of the main Department of Commerce building. The signed Preliminary Decision Memorandum and the electronic versions of the Preliminary Decision Memorandum are identical in content.

Scope of the Circumvention Inquiry

This circumvention inquiry covers merchandise from Taiwan that appears ready to undergo the final processing of cutting the unfinished PRCBS to length, sealing the bottoms, and die-cutting the unfinished PRCBs to create the handles of the finished PRCBs. The unfinished PRCBs subject to this inquiry may or may not have printing and may be of different dimensions as long as they otherwise meet the description of the scope of the order.

Methodology

The Department made this preliminary finding of circumvention in accordance with section 781(a) of the Tariff Act of 1930, as amended (Act) and 19 CFR 351.225(g). We relied on information placed on the record by Hilex Poly Co., LLC and Superbag Corp. (the petitioners) and the importer of record, SmileMakers Inc. For a full description of the methodology underlying our conclusions, *see* the Preliminary Decision Memorandum.

Preliminary Determination

As detailed in the Preliminary Decision Memorandum, we preliminarily determine, pursuant to section 781(a) of the Act, that imports of unfinished PRCBs from Taiwan are circumventing the *Order.* A list of the topics discussed in the Preliminary Decision Memorandum is attached as an Appendix to this notice.

Suspension of Liquidation

In accordance with 19 CFR 351.225(l)(2), we are directing U.S. Customs and Border Protection (CBP) to suspend liquidation of entries of merchandise subject to this inquiry that is entered, or withdrawn from warehouse, for consumption on or after July 31, 2013, the date of publication of the initiation of this inquiry.[3] We will also instruct CBP to require a cash deposit of estimated duties at the applicable rates for each unliquidated entry of the product entered, or withdrawn from warehouse, for consumption on or after July 31, 2013, in accordance with 19 CFR 351.225(l)(2).

Public Comment

Pursuant to 19 CFR 351.309(c) and (d), interested parties may submit case and rebuttal briefs. Case briefs will be due not later than 30 days after the date of publication of this notice. Pursuant to 19 CFR 351.309(d), rebuttal briefs, limited to issues raised in the case briefs, may be filed not later than five days after the date for filing case briefs. Parties who submit case briefs or rebuttal briefs in this proceeding are encouraged to submit with each argument: (1) a statement of the issue; (2) a brief summary of the argument; and (3) a table of authorities. All such case and rebuttal briefs must be filed electronically *via* IA ACCESS. An electronically filed document must be received successfully in its entirety by the Department's electronic records system, IA ACCESS, by 5 p.m. Eastern Time on the date on which it is due.

Additionally, pursuant to 19 CFR 351.310(c), interested parties who wish to request a hearing, or to participate if one is requested, must submit a written request to the Assistant Secretary for Enforcement and Compliance, filed electronically *via* IA ACCESS within 30 days after the date of publication of this notice. Requests should contain: (1) the party's name, address and telephone number; (2) the number of participants; and (3) a list of issues to be discussed. Issues raised in the hearing will be limited to those raised in the respective case briefs.

As discussed in the memorandum entitled, ''*Polyethylene Retail Carrier Bags from Taiwan:* Extension of Deadline for Final Determination of Anticircumvention Inquiry,'' dated May 16, 2014, the current deadline for the final determination for this inquiry is June 6, 2014. We intend to extend this deadline for the final determination of circumvention by 150 days to November 3, 2014.

Notification to the International Trade Commission

Pursuant to section 781(e) of the Act, we will notify the International Trade Commission of the proposed inclusion of unfinished PRCBs in the *Order.*

Notification to Interested Parties

This preliminary determination of circumvention is in accordance with section 781(a) of the Act and 19 CFR 351.225.

---

[1] *See Antidumping Duty Orders: Polyethylene Retail Carrier Bags from Indonesia, Taiwan, and the Socialist Republic of Vietnam,* 75 FR 23667 (May 4, 2010) (the *Order*).

[2] A full description of the scope of the *Order* is contained in the memorandum from Christian Marsh, Deputy Assistant Secretary for Antidumping and Countervailing Duty Operations, to Paul Piquado, Assistant Secretary for Enforcement and Compliance, ''Preliminary Decision Memorandum for the Circumvention Inquiry of the Antidumping Duty Order on Polyethylene Retail Carrier Bags from Taiwan'' dated concurrently with this notice (Preliminary Decision Memorandum), which is hereby adopted by this notice.

[3] *See Polyethylene Retail Carrier Bags From Taiwan: Initiation of Anti-circumvention Inquiry on Antidumping Duty Order,* 78 FR 46319 (July 31, 2013).

Dated: May 27, 2014.

Paul Piquado,

Assistant Secretary for Enforcement and Compliance.

Appendix

List of Topics Discussed in the Preliminary Decision Memorandum

1. Summary
2. Background
3. Scope of the Order
4. Merchandise Completed or Assembled in the United States and Subject to This Anti-Circumvention Inquiry
5. Statutory and Regulatory Framework
6. Allegations of Circumvention as Identified in the Initiation of Inquiry
7. Analysis
   A. The Merchandise Sold in the United States Is of the Same Class or Kind as Merchandise Subject to the Order
   B. The Merchandise Sold in the United States Is Completed from Parts or Components Produced in Taiwan, the Foreign Country
   C. The Process of Assembly or Completion in the United States is Minor or Insignificant
   D. The Value of the Parts or Components Produced in the Foreign Country Is a Significant Portion of the Total Value of the Merchandise
   E. Additional Factors to Consider
   i. Pattern of Trade, Including Sourcing Patterns
   ii. Affiliation
   iii. Subsequent Import Volume
8. Recommendation

[FR Doc. 2014–12701 Filed 5–30–14; 8:45 am]

BILLING CODE 3510–DS–P

DEPARTMENT OF COMMERCE

International Trade Administration

Antidumping or Countervailing Duty Order, Finding, or Suspended Investigation; Advance Notification of Sunset Reviews

AGENCY: Enforcement and Compliance, International Trade Administration, Department of Commerce.

Background

Every five years, pursuant to section 751(c) of the Tariff Act of 1930, as amended (''the Act''), the Department of Commerce (''the Department'') and the International Trade Commission automatically initiate and conduct a review to determine whether revocation of a countervailing or antidumping duty order or termination of an investigation suspended under section 704 or 734 of the Act would be likely to lead to continuation or recurrence of dumping or a countervailable subsidy (as the case may be) and of material injury.

Upcoming Sunset Reviews for July 2014

The following Sunset Reviews are scheduled for initiation in July 2014 and will appear in that month's Notice of Initiation of Five-Year Sunset Review (''Sunset Review'').

	Department contact
Antidumping Duty Proceedings	
Tow-Behind Lawn Groomers and Parts Thereof from China (A–570–939) (1st Review)	Charles Riggle, (202) 482–0650.
Countervailing Duty Proceedings	
Tow-Behind Lawn Groomers and Parts Thereof from China (C–570–940) (1st Review)	Jacky Arrowsmith, (202) 482–5255.
Suspended Investigations	
No Sunset Review of suspended investigations is scheduled for initiation in July 2014.	

The Department's procedures for the conduct of Sunset Reviews are set forth in 19 CFR 351.218. The Notice of Initiation of Five-Year (''Sunset'') Reviews provides further information regarding what is required of all parties to participate in Sunset Reviews.

Pursuant to 19 CFR 351.103(c), the Department will maintain and make available a service list for these proceedings. To facilitate the timely preparation of the service list(s), it is requested that those seeking recognition as interested parties to a proceeding contact the Department in writing within 10 days of the publication of the Notice of Initiation.

Please note that if the Department receives a Notice of Intent to Participate from a member of the domestic industry within 15 days of the date of initiation, the review will continue. Thereafter, any interested party wishing to participate in the Sunset Review must provide substantive comments in response to the notice of initiation no later than 30 days after the date of initiation.

This notice is not required by statute but is published as a service to the international trading community.

Dated: May 13, 2014.

Christian Marsh,

Deputy Assistant Secretary for Antidumping and Countervailing Duty Operations.

[FR Doc. 2014–12703 Filed 5–30–14; 8:45 am]

BILLING CODE 3510–DS–P

DEPARTMENT OF COMMERCE

International Trade Administration

Antidumping or Countervailing Duty Order, Finding, or Suspended Investigation; Opportunity To Request Administrative Review

AGENCY: Enforcement and Compliance, International Trade Administration, Department of Commerce.

FOR FURTHER INFORMATION CONTACT: Brenda E. Waters, Office of AD/CVD Operations, Customs Liaison Unit, Enforcement and Compliance, International Trade Administration, U.S. Department of Commerce, 14th Street and Constitution Avenue NW., Washington, DC 20230, telephone: (202) 482–4735.

Background

Each year during the anniversary month of the publication of an antidumping or countervailing duty order, finding, or suspended investigation, an interested party, as defined in section 771(9) of the Tariff Act of 1930, as amended (''the Act''), may request, in accordance with 19 CFR 351.213, that the Department of Commerce (''the Department'') conduct an administrative review of that antidumping or countervailing duty order, finding, or suspended investigation.

All deadlines for the submission of comments or actions by the Department discussed below refer to the number of calendar days from the applicable starting date.

Respondent Selection

In the event the Department limits the number of respondents for individual examination for administrative reviews initiated pursuant to requests made for the orders identified below, the

Department intends to select respondents based on U.S. Customs and Border Protection (''CBP'') data for U.S. imports during the period of review. We intend to release the CBP data under Administrative Protective Order (''APO'') to all parties having an APO within five days of publication of the initiation notice and to make our decision regarding respondent selection within 21 days of publication of the initiation **Federal Register** notice. Therefore, we encourage all parties interested in commenting on respondent selection to submit their APO applications on the date of publication of the initiation notice, or as soon thereafter as possible. The Department invites comments regarding the CBP data and respondent selection within five days of placement of the CBP data on the record of the review.

In the event the Department decides it is necessary to limit individual examination of respondents and conduct respondent selection under section 777A(c)(2) of the Act:

In general, the Department finds that determinations concerning whether particular companies should be ''collapsed'' (*i.e.,* treated as a single entity for purposes of calculating antidumping duty rates) require a substantial amount of detailed information and analysis, which often require follow-up questions and analysis. Accordingly, the Department will not conduct collapsing analyses at the respondent selection phase of this review and will not collapse companies at the respondent selection phase unless there has been a determination to collapse certain companies in a previous segment of this antidumping proceeding (*i.e.,* investigation, administrative review, new shipper review or changed circumstances review). For any company subject to this review, if the Department determined, or continued to treat, that company as collapsed with others, the Department will assume that such companies continue to operate in the same manner and will collapse them for respondent selection purposes. Otherwise, the Department will not collapse companies for purposes of respondent selection. Parties are requested to (a) identify which companies subject to review previously were collapsed, and (b) provide a citation to the proceeding in which they were collapsed. Further, if companies are requested to complete the Quantity and Value Questionnaire for purposes of respondent selection, in general each company must report volume and value data separately for itself. Parties should not include data for any other party, even if they believe they should be treated as a single entity with that other party. If a company was collapsed with another company or companies in the most recently completed segment of this proceeding where the Department considered collapsing that entity, complete quantity and value data for that collapsed entity must be submitted.

Deadline for Withdrawal of Request for Administrative Review

Pursuant to 19 CFR 351.213(d)(1), a party that requests a review may withdraw that request within 90 days of the date of publication of the notice of initiation of the requested review. The regulation provides that the Department may extend this time if it is reasonable to do so. In order to provide parties additional certainty with respect to when the Department will exercise its discretion to extend this 90-day deadline, interested parties are advised that, with regard to reviews requested on the basis of anniversary months on or after June 2014, the Department does not intend to extend the 90-day deadline unless the requestor demonstrates that an extraordinary circumstance prevented it from submitting a timely withdrawal request. Determinations by the Department to extend the 90-day deadline will be made on a case-by-case basis.

The Department is providing this notice on its Web site, as well as in its ''Opportunity to Request Administrative Review'' notices, so that interested parties will be aware of the manner in which the Department intends to exercise its discretion in the future.

Opportunity To Request a Review: Not later than the last day of June 2014,[1] interested parties may request administrative review of the following orders, findings, or suspended investigations, with anniversary dates in June for the following periods:

	Period of review
Antidumping Duty Proceedings	
Japan:	
Carbon and Alloy Seamless Standard, Line, and Pressure Pipe, A–588–850 (Over 4 ½ Inches)	6/1/13–5/31/14
Carbon and Alloy Seamless Standard, Line and Pressure Pipe, A–588–851 (Under 4 ½ Inches)	6/1/13–5/31/14
Spain: Chlorinated Isocyanurates, A–469–814	6/1/13–5/31/14
Taiwan: Helical Spring Lock Washers, A–583–820	6/1/13–5/31/14
The People's Republic of China:	
Artist Canvas, A–570–899	6/1/13–5/31/14
Chlorinated Isocyanurates, A–570–898	6/1/13–5/31/14
Furfuryl Alcohol, A–570–835	6/1/13–5/31/14
High Pressure Steel Cylinders, A–570–977	6/1/13–5/31/14
Polyester Staple Fiber, A–570–905	6/1/13–5/31/14
Prestressed Concrete Steel Wire Strand, A–570–945	6/1/13–5/31/14
Silicon Metal, A–570–806	6/1/13–5/31/14
Tapered Roller Bearings, A–570–601	6/1/13–5/31/14
Countervailing Duty Proceedings	
The People's Republic of China: High Pressure Steel Cylinders, C–570–978	1/1/13–12/31/13
Suspension Agreements	
None.	

In accordance with 19 CFR 351.213(b), an interested party as defined by section 771(9) of the Act may request in writing that the Secretary conduct an administrative review. For both antidumping and countervailing

[1] Or the next business day, if the deadline falls on a weekend, federal holiday or any other day when the Department is closed.

duty reviews, the interested party must specify the individual producers or exporters covered by an antidumping finding or an antidumping or countervailing duty order or suspension agreement for which it is requesting a review. In addition, a domestic interested party or an interested party described in section 771(9)(B) of the Act must state why it desires the Secretary to review those particular producers or exporters. If the interested party intends for the Secretary to review sales of merchandise by an exporter (or a producer if that producer also exports merchandise from other suppliers) which were produced in more than one country of origin and each country of origin is subject to a separate order, then the interested party must state specifically, on an order-by-order basis, which exporter(s) the request is intended to cover.

Note that, for any party the Department was unable to locate in prior segments, the Department will not accept a request for an administrative review of that party absent new information as to the party's location. Moreover, if the interested party who files a request for review is unable to locate the producer or exporter for which it requested the review, the interested party must provide an explanation of the attempts it made to locate the producer or exporter at the same time it files its request for review, in order for the Secretary to determine if the interested party's attempts were reasonable, pursuant to 19 CFR 351.303(f)(3)(ii).

As explained in *Antidumping and Countervailing Duty Proceedings: Assessment of Antidumping Duties,* 68 FR 23954 (May 6, 2003), and *Non-Market Economy Antidumping Proceedings: Assessment of Antidumping Duties,* 76 FR 65694 (October 24, 2011) the Department clarified its practice with respect to the collection of final antidumping duties on imports of merchandise where intermediate firms are involved. The public should be aware of this clarification in determining whether to request an administrative review of merchandise subject to antidumping findings and orders.[2]

Further, as explained in *Antidumping Proceedings: Announcement of Change in Department Practice for Respondent Selection in Antidumping Duty Proceedings and Conditional Review of the Nonmarket Economy Entity in NME Antidumping Duty Proceedings,* 78 FR 65963 (November 4, 2013), the Department clarified its practice with regard to the conditional review of the non-market economy (NME) entity in administrative reviews of antidumping duty orders. The Department will no longer consider the NME entity as an exporter conditionally subject to administrative reviews. Accordingly, the NME entity will not be under review unless the Department specifically receives a request for, or self-initiates, a review of the NME entity.[3] In administrative reviews of antidumping duty orders on merchandise from NME countries where a review of the NME entity has not been initiated, but where an individual exporter for which a review was initiated does not qualify for a separate rate, the Department will issue a final decision indicating that the company in question is part of the NME entity. However, in that situation, because no review of the NME entity was conducted, the NME entity's entries were not subject to the review and the rate for the NME entity is not subject to change as a result of that review (although the rate for the individual exporter may change as a function of the finding that the exporter is part of the NME entity).

Following initiation of an antidumping administrative review when there is no review requested of the NME entity, the Department will instruct CBP to liquidate entries for all exporters not named in the initiation notice, including those that were suspended at the NME entity rate.

All requests must be filed electronically in Enforcement and Compliance's Antidumping and Countervailing Duty Centralized Electronic Service System (''IA ACCESS'') on the IA ACCESS Web site at *http://iaaccess.trade.gov.*[4] Further, in accordance with 19 CFR 351.303(f)(l)(i), a copy of each request must be served on the petitioner and each exporter or producer specified in the request.

The Department will publish in the **Federal Register** a notice of ''Initiation of Administrative Review of Antidumping or Countervailing Duty Order, Finding, or Suspended Investigation'' for requests received by the last day of June 2014. If the Department does not receive, by the last day of June 2014, a request for review of entries covered by an order, finding, or suspended investigation listed in this notice and for the period identified above, the Department will instruct CBP to assess antidumping or countervailing duties on those entries at a rate equal to the cash deposit of (or bond for) estimated antidumping or countervailing duties required on those entries at the time of entry, or withdrawal from warehouse, for consumption and to continue to collect the cash deposit previously ordered.

For the first administrative review of any order, there will be no assessment of antidumping or countervailing duties on entries of subject merchandise entered, or withdrawn from warehouse, for consumption during the relevant provisional-measures ''gap'' period of the order, if such a gap period is applicable to the period of review.

This notice is not required by statute but is published as a service to the international trading community.

Dated: May 13, 2014.

Christian Marsh,

Deputy Assistant Secretary for Antidumping and Countervailing Duty Operations.

[FR Doc. 2014–12702 Filed 5–30–14; 8:45 am]

BILLING CODE 3510–DS–P

[2] *See also* the Enforcement and Compliance Web site at *http://trade.gov/enforcement/.*

[3] In accordance with 19 CFR 351.213(b)(1), parties should specify that they are requesting a review of entries from exporters comprising the entity, and to the extent possible, include the names of such exporters in their request.

[4] *See Antidumping and Countervailing Duty Proceedings: Electronic Filing Procedures; Administrative Protective Order Procedures,* 76 FR 39263 (July 6, 2011).

DEPARTMENT OF COMMERCE

International Trade Administration

[C–552–813]

Certain Steel Wire Garment Hangers From the Socialist Republic of Vietnam: Rescission of Countervailing Duty Administrative Review; 2012–2013

AGENCY: Enforcement and Compliance, International Trade Administration, Department of Commerce.

DATES: *Effective Date:* June 2, 2014.

FOR FURTHER INFORMATION CONTACT: Robert Copyak, AD/CVD Operations, Office III, Enforcement and Compliance, International Trade Administration, U.S. Department of Commerce, 14th Street and Constitution Avenue NW., Washington, DC 20230; telephone: (202) 482–2209.

SUPPLEMENTARY INFORMATION:

Background

On February 3, 2014, the Department of Commerce (the Department) published a notice of opportunity to request an administrative review of the countervailing duty order on certain steel wire garment hangers from the

Socialist Republic of Vietnam (Vietnam).[1]

Pursuant to a request from M&B Metal Products Company, Inc., Innovative Fabrication LLC/Indy Hanger, and US Hanger Company, LLC (collectively, Petitioners), the Department published in the **Federal Register** the notice of initiation of countervailing duty administrative review with respect to 49 companies for the period June 4, 2012, through December 31, 2013.[2] Petitioners were the only interested parties to submit a request for this administrative review.

On May 20, 2014, Petitioners withdrew their request for review with respect to all 49 companies in a timely manner.[3]

Rescission of the 2012–2013 Administrative Review

Pursuant to 19 CFR 351.213(d)(1), the Secretary will rescind an administrative review, in whole or in part, if the parties that requested a review withdraw the request within 90 days of the date of publication of the notice of initiation of the requested review. The Department published the *Initiation* on April 1 2014.[4] Petitioners' withdrawal of their review request was submitted within the 90-day period following the publication of the *Initiation* and, thus, is timely. Therefore, in accordance with 19 CFR 351.213(d)(1), we are rescinding this review of the countervailing duty order on certain steel wire garment hangers from Vietnam in its entirety.

Assessment

The Department will instruct U.S. Customs and Border Protection (CBP) to assess countervailing duties on all appropriate entries. For the companies for which this review is rescinded countervailing duties shall be assessed at rates equal to the cash deposit of estimated countervailing duties required at the time of entry, or withdrawal from warehouse, for consumption, during the period June 4, 2012, through December 31, 2013, in accordance with 19 CFR 351.212(c)(1)(i).

The Department intends to issue appropriate assessment instructions directly to CBP 15 days after publication of this notice.

Notification Regarding Administrative Protective Order

This notice serves as a final reminder to parties subject to administrative protective orders (APOs) of their responsibility concerning the disposition of proprietary information disclosed under an APO in accordance with 19 CFR 351.305(a)(3), which continues to govern business proprietary information in this segment of the proceeding. Timely written notification of the return/destruction of APO materials or conversion to judicial protective order is hereby requested. Failure to comply with the regulations and terms of an APO is a violation which is subject to sanction.

This notice is issued and published in accordance with sections 751(a)(1) and 777(i)(1) of the Tariff Act of 1930, as amended, and 19 CFR 351.213(d)(4).

Dated: May 28, 2014.

Christian Marsh,

Deputy Assistant Secretary for Antidumping and Countervailing Duty Operations.

[FR Doc. 2014–12725 Filed 5–30–14; 8:45 am]

BILLING CODE 3510–DS–P

DEPARTMENT OF COMMERCE

International Trade Administration

Initiation of Five-Year (''Sunset'') Review

AGENCY: Enforcement and Compliance, International Trade Administration, Department of Commerce.

SUMMARY: In accordance with section 751(c) of the Tariff Act of 1930, as amended (''the Act''), the Department of Commerce (''the Department'') is automatically initiating the five-year review (''Sunset Review'') of the antidumping and countervailing duty (''AD/CVD'') orders listed below. The International Trade Commission (''the Commission'') is publishing concurrently with this notice its notice of *Institution of Five-Year Review* which covers the same orders.

DATES: *Effective Date:* June 1, 2014.

FOR FURTHER INFORMATION CONTACT: The Department official identified in the *Initiation of Review* section below at AD/CVD Operations, Enforcement and Compliance, International Trade Administration, U.S. Department of Commerce, 14th Street and Constitution Avenue NW., Washington, DC 20230. For information from the Commission contact Mary Messer, Office of Investigations, U.S. International Trade Commission at (202) 205–3193.

SUPPLEMENTARY INFORMATION:

Background

The Department's procedures for the conduct of Sunset Reviews are set forth in its *Procedures for Conducting Five-Year (''Sunset'') Reviews of Antidumping and Countervailing Duty Orders,* 63 FR 13516 (March 20, 1998) and 70 FR 62061 (October 28, 2005). Guidance on methodological or analytical issues relevant to the Department's conduct of Sunset Reviews is set forth in *Antidumping Proceedings: Calculation of the Weighted-Average Dumping Margin and Assessment Rate in Certain Antidumping Duty Proceedings; Final Modification,* 77 FR 8101 (February 14, 2012).

Initiation of Review

In accordance with 19 CFR 351.218(c), we are initiating Sunset Review(s) of the following antidumping and countervailing duty order(s):

DOC Case No.	ITC Case No.	Country	Product	Department contact
A–552–801	731–TA–1012	Vietnam	Frozen Fish Fillets (2nd Review).	Charles Riggle (202) 482–0550.

Filing Information

As a courtesy, we are making information related to sunset proceedings, including copies of the pertinent statute and Department's regulations, the Department's schedule for Sunset Reviews, a listing of past revocations and continuations, and current service lists, available to the public on the Department's Web site at the following address: ''*http://enforcement.trade.gov/sunset/.*'' All submissions in these Sunset Reviews must be filed in accordance with the Department's regulations regarding format, translation, and service of documents. These rules, including

[1] *See Antidumping or Countervailing Duty Order, Finding, or Suspended Investigation; Opportunity to Request Administrative Review,* 79 FR 6159 (February 3, 2014).

[2] *See Initiation of Antidumping and Countervailing Duty Administrative Reviews and Request for Revocation in Part,* 79 FR 18262 (April 1, 2014) (*Initiation*).

[3] *See* Petitioners' May 20, 2014, submission.

[4] *See Initiation.*

electronic filing requirements via Enforcement and Compliance's Antidumping and Countervailing Duty Centralized Electronic Service System (''IA ACCESS''), can be found at 19 CFR 351.303.[1]

Revised Factual Information Requirements

This notice serves as a reminder that any party submitting factual information in an AD/CVD proceeding must certify to the accuracy and completeness of that information.[2] Parties are hereby reminded that revised certification requirements are in effect for company/government officials as well as their representatives in all AD/CVD investigations or proceedings initiated on or after August 16, 2013.[3] The formats for the revised certifications are provided at the end of the *Final Rule.* The Department intends to reject factual submissions if the submitting party does not comply with the revised certification requirements.

On April 10, 2013, the Department published *Definition of Factual Information and Time Limits for Submission of Factual Information: Final Rule,* 78 FR 21246 (April 10, 2013), which modified two regulations related to antidumping and countervailing duty proceedings: The definition of factual information (19 CFR 351.102(b)(21), and the time limits for the submission of factual information (19 CFR 351.301). The final rule identifies five categories of factual information in 19 CFR 351.102(b)(21), which are summarized as follows: (i) Evidence submitted in response to questionnaires; (ii) evidence submitted in support of allegations; (iii) publicly available information to value factors under 19 CFR 351.408(c) or to measure the adequacy of remuneration under 19 CFR 351.511(a)(2); (iv) evidence placed on the record by the Department; and (v) evidence other than factual information described in (i)–(iv). The final rule requires any party, when submitting factual information, to specify under which subsection of 19 CFR 351.102(b)(21) the information is being submitted and, if the information is submitted to rebut, clarify, or correct factual information already on the record, to provide an explanation identifying the information already on the record that the factual information seeks to rebut, clarify, or correct. The final rule also modified 19 CFR 351.301 so that, rather than providing general time limits, there are specific time limits based on the type of factual information being submitted. These modifications are effective for all segments initiated on or after May 10, 2013. Review the final rule, available at *http://enforcement.trade.gov/frn/2013/1304frn/2013-08227.txt,* prior to submitting factual information in this segment. To the extent that other regulations govern the submission of factual information in a segment (such as 19 CFR 351.218), these time limits will continue to be applied.

Revised Extension of Time Limits Regulation

On September 20, 2013, the Department modified its regulation concerning the extension of time limits for submissions in antidumping and countervailing duty proceedings: *Extension of Time Limits,* 78 FR 57790 (September 20, 2013). The modification clarifies that parties may request an extension of time limits before a time limit established under part 351 of the Department's regulations expires, or as otherwise specified by the Secretary. In general, an extension request will be considered untimely if it is filed after the time limit established under part 351 expires. For submissions which are due from multiple parties simultaneously, an extension request will be considered untimely if it is filed after 10:00 a.m. on the due date. Under certain circumstances, the Department may elect to specify a different time limit by which extension requests will be considered untimely for submissions which are due from multiple parties simultaneously. In such a case, the Department will inform parties in the letter or memorandum setting forth the deadline (including a specified time) by which extension requests must be filed to be considered timely. This modification also requires that an extension request must be made in a separate, stand-alone submission, and clarifies the circumstances under which the Department will grant untimely-filed requests for the extension of time limits. These modifications are effective for all segments initiated on or after October 21, 2013. Review the final rule, available at *http://www.gpo.gov/fdsys/pkg/FR-2013-09-20/html/2013-22853.htm,* prior to submitting factual information in these segments.

Letters of Appearance and Administrative Protective Orders

Pursuant to 19 CFR 351.103(d), the Department will maintain and make available a public service list for these proceedings. Parties wishing to participate in any of these five-year reviews must file letters of appearance as discussed at 19 CFR 351.103(d)). To facilitate the timely preparation of the public service list, it is requested that those seeking recognition as interested parties to a proceeding submit an entry of appearance within 10 days of the publication of the Notice of Initiation.

Because deadlines in Sunset Reviews can be very short, we urge interested parties who want access to proprietary information under administrative protective order (''APO'') to file an APO application immediately following publication in the **Federal Register** of this notice of initiation. The Department's regulations on submission of proprietary information and eligibility to receive access to business proprietary information under APO can be found at 19 CFR 351.304–306.

Information Required From Interested Parties

Domestic interested parties, as defined in section 771(9)(C), (D), (E), (F), and (G) of the Act and 19 CFR 351.102(b), wishing to participate in a Sunset Review must respond not later than 15 days after the date of publication in the **Federal Register** of this notice of initiation by filing a notice of intent to participate. The required contents of the notice of intent to participate are set forth at 19 CFR 351.218(d)(1)(ii). In accordance with the Department's regulations, if we do not receive a notice of intent to participate from at least one domestic interested party by the 15-day deadline, the Department will automatically revoke the order without further review.[4]

If we receive an order-specific notice of intent to participate from a domestic interested party, the Department's regulations provide that all parties wishing to participate in a Sunset Review must file complete substantive responses not later than 30 days after the date of publication in the **Federal Register** of this notice of initiation. The required contents of a substantive response, on an order-specific basis, are set forth at 19 CFR 351.218(d)(3). Note that certain information requirements differ for respondent and domestic parties. Also, note that the Department's information requirements are distinct from the Commission's information

[1] *See also Antidumping and Countervailing Duty Proceedings: Electronic Filing Procedures; Administrative Protective Order Procedures,* 76 FR 39263 (July 6, 2011).

[2] *See* section 782(b) of the Act.

[3] *See Certification of Factual Information To Import Administration During Antidumping and Countervailing Duty Proceedings,* 78 FR 42678 (July 17, 2013) (''*Final Rule*'') (amending 19 CFR 351.303(g)).

[4] *See* 19 CFR 351.218(d)(1)(iii).

requirements. Consult the Department's regulations for information regarding the Department's conduct of Sunset Reviews. Consult the Department's regulations at 19 CFR part 351 for definitions of terms and for other general information concerning antidumping and countervailing duty proceedings at the Department.

This notice of initiation is being published in accordance with section 751(c) of the Act and 19 CFR 351.218(c).

Dated: May 13, 2014.

Christian Marsh,

Deputy Assistant Secretary for Antidumping and Countervailing Duty Operations.

[FR Doc. 2014–12733 Filed 5–30–14; 8:45 am]

BILLING CODE 3510–DS–P

DEPARTMENT OF COMMERCE

National Oceanic and Atmospheric Administration

Proposed Information Collection; Comment Request; Coastal Household Telephone Survey

AGENCY: National Oceanic and Atmospheric Administration, Commerce.

ACTION: Notice.

SUMMARY: The Department of Commerce, as part of its continuing effort to reduce paperwork and respondent burden, invites the general public and other Federal agencies to take this opportunity to comment on proposed and/or continuing information collections, as required by the Paperwork Reduction Act of 1995.

DATES: Written comments must be submitted on or before August 1, 2014.

ADDRESSES: Direct all written comments to Jennifer Jessup, Departmental Paperwork Clearance Officer, Department of Commerce, Room 6616, 14th and Constitution Avenue NW., Washington, DC 20230 (or via the Internet at *JJessup@doc.gov*).

FOR FURTHER INFORMATION CONTACT: Requests for additional information or copies of the information collection instrument and instructions should be directed to Anjunell Lewis, (301) 427–8145 or *Anjunell.Lewis@NOAA.gov*.

SUPPLEMENTARY INFORMATION:

I. Abstract

This request is for a new information collection.

Marine recreational anglers are surveyed for catch and effort data, fish biology data, and angler socioeconomic characteristics. These data are required to carry out provisions of the Magnuson-Stevens Fishery Conservation and Management Act (16 U.S.C. 1801 et seq.), as amended, regarding conservation and management of fishery resources.

The Coastal Household Telephone Survey (CHTS) utilizes a computer-assisted, random-digit-dialing (RDD) approach to contact full-time, residential households located in coastal counties and collect information about recent recreational fishing activity. Respondents are asked to recall the number of recreational saltwater fishing trips taken during a specific time period and to provide details about each fishing trip. Data collected from the CHTS are used to estimate the total number of recreational saltwater fishing trips by residents of coastal counties. CHTS estimates are combined with estimates derived from an independent survey, the Access-Point Angler Intercept Survey (APAIS), to estimate total, state-level fishing effort and catch, by species. These estimates are used in the development, implementation, and monitoring of fishery management programs by the National Marine Fisheries Service, regional fishery management councils, interstate marine fisheries commissions, and state fishery agencies.

II. Method of Collection

Data will be collected through a random-digit-dialing telephone survey of coastal county households.

III. Data

OMB Control Number: 0648–XXXX.

Form Number: None.

Type of Review: Regular submission (request for a new information collection).

Affected Public: Individuals or households.

Estimated Number of Respondents: 214,398.

Estimated Time per Response: 2 minutes per household.

Estimated Total Annual Burden Hours: 7,147.

Estimated Total Annual Cost to Public: $0 in recordkeeping/reporting costs.

IV. Request for Comments

Comments are invited on: (a) Whether the proposed collection of information is necessary for the proper performance of the functions of the agency, including whether the information shall have practical utility; (b) the accuracy of the agency's estimate of the burden (including hours and cost) of the proposed collection of information; (c) ways to enhance the quality, utility, and clarity of the information to be collected; and (d) ways to minimize the burden of the collection of information on respondents, including through the use of automated collection techniques or other forms of information technology.

Comments submitted in response to this notice will be summarized and/or included in the request for OMB approval of this information collection; they also will become a matter of public record.

Dated: May 27, 2014

Gwellnar Banks,

Management Analyst, Office of the Chief Information Officer.

[FR Doc. 2014–12592 Filed 5–30–14; 8:45 am]

BILLING CODE 3510–22–P

DEPARTMENT OF COMMERCE

National Oceanic and Atmospheric Administration

Proposed Information Collection; Comment Request; Southeast Region IFQ Programs

AGENCY: National Oceanic and Atmospheric Administration (NOAA), Commerce.

ACTION: Notice.

SUMMARY: The Department of Commerce, as part of its continuing effort to reduce paperwork and respondent burden, invites the general public and other federal agencies to take this opportunity to comment on proposed and/or continuing information collections, as required by the Paperwork Reduction Act of 1995.

DATES: Written comments must be submitted on or before August 1, 2014.

ADDRESSES: Direct all written comments to Jennifer Jessup, Departmental Paperwork Clearance Officer, Department of Commerce, Room 6616, 14th and Constitution Avenue NW., Washington, DC 20230 (or via the Internet at *JJessup@doc.gov*).

FOR FURTHER INFORMATION CONTACT: Requests for additional information or copies of the information collection instrument and instructions should be directed to Anik Clemens, (727) 551–5611 or *Anik.Clemens@noaa.gov*.

SUPPLEMENTARY INFORMATION:

I. Abstract

This request is for an extension of a currently approved information collection.

The Magnuson-Stevens Fishery Conservation and Management authorizes the Gulf of Mexico Fishery Management Council and South

Atlantic Fishery Management Council to prepare and amend fishery management plans for any fishery in waters under their jurisdictions. The National Oceanic and Atmospheric Administration (NOAA), National Marine Fisheries Service (NMFS) manages three individual fishing quota (IFQ)/individual transferable quota (ITQ) programs in the Southeast Region. In 1992, an ITQ program for commercial wreckfish in the South Atlantic Exclusive Economic Zone was implemented through Amendment 5 to the Fishery Management Plan for the Snapper-Grouper Fishery in the South Atlantic Region (South Atlantic Snapper-Grouper FMP). In 2007, a commercial red snapper IFQ program was implemented through Amendment 26 to the Fishery Management Plan for Gulf Reef Fish Resources in the Gulf of Mexico) Gulf Reef Fish FMP). In 2010, a commercial grouper and tilefish IFQ program was implemented through Amendment 29 to the Gulf Reef Fish FMP.

The collection of information addresses IFQ share certificate and allocation debits and transfers, as well as collection of landings information necessary to operate, administer, and review management of commercial red snapper, and grouper/tilefish in the Gulf of Mexico and wreckfish in the South Atlantic.

II. Method of Collection

Information for the Gulf red snapper and grouper/tilefish IFQ programs is collected via a web-based system, and through a 24-hour call hot line, with paper submission an option only in catastrophic circumstances.

The wreckfish share transfer process requires the signatures of witnesses. With only four respondents, it is not cost effective to set up an information technology system to handle this.

III. Data

OMB Control Number: 0648–0551.

Form Number: None.

Type of Review: Regular submission (extension of a currently approved collection).

Affected Public: Business or other for-profit organizations.

Estimated Number of Respondents: 1,644.

Estimated Time per Response: Transfer of Share, Close IFQ Account Form, 2 minutes; Landing Correction Form, 3 minutes; Reef Fish Active Vessels Report, Dealer Landing Transaction Report, Notification of Landing, Transfer of Allocation, Reef fish Approved Landing Location and Landing Criteria, and Reef Fish Permit Consolidation, 5 minutes; IFQ Online Account Renewal Application, 10 minutes; Wreckfish Share Transfer, Quarterly Dealer Report with Cost Recovery Fees, 15 minutes.

Estimated Total Annual Burden Hours: 2,303.

Estimated Total Annual Cost to Public: $980,524.

IV. Request for Comments

Comments are invited on: (a) Whether the proposed collection of information is necessary for the proper performance of the functions of the agency, including whether the information shall have practical utility; (b) the accuracy of the agency's estimate of the burden (including hours and cost) of the proposed collection of information; (c) ways to enhance the quality, utility, and clarity of the information to be collected; and (d) ways to minimize the burden of the collection of information on respondents, including through the use of automated collection techniques or other forms of information technology.

Comments submitted in response to this notice will be summarized and/or included in the request for OMB approval of this information collection; they also will become a matter of public record.

Dated: May 27, 2014.

Gwellnar Banks,

Management Analyst, Office of the Chief Information Officer.

[FR Doc. 2014–12591 Filed 5–30–14; 8:45 am]

BILLING CODE 3510–22–P

DEPARTMENT OF COMMERCE

National Oceanic and Atmospheric Administration

Science Advisory Board (SAB)

AGENCY: Office of Oceanic and Atmospheric Research (OAR), National Oceanic and Atmospheric Administration (NOAA), Department of Commerce (DOC).

ACTION: Notice of public meeting.

SUMMARY: This notice sets forth the schedule and proposed agenda of a forthcoming meeting of the NOAA Science Advisory Board. The members will discuss and provide advice on issues outlined in the section on Matters to be considered.

Time and Date: The meeting is scheduled for Monday June 23, 2014 from 3:30–4:30 p.m. Eastern Daylight Time.

ADDRESSES: Conference call. Public access is available at: NOAA, SSMC 3, Room 11836, 1315 East-West Highway, Silver Spring, MD. Members of the public will not be able to dial in to this meeting.

Status: The meeting will be open to public participation with a 5-minute public comment period from 4:20–4:25 p.m. Eastern Daylight Time. The SAB expects that public statements presented at its meetings will not be repetitive of previously submitted verbal or written statements. In general, each individual or group making a verbal presentation will be limited to a total time of one minute. Written comments should be received in the SAB Executive Director's Office by June 16, 2014 to provide sufficient time for SAB review. Written comments received by the SAB Executive Director after February June 16, 2014, will be distributed to the SAB, but may not be reviewed prior to the meeting date.

Special Accommodations: These meetings are physically accessible to people with disabilities. Requests for special accommodations may be directed no later than 12 p.m. on June 16, 2014, to Dr. Cynthia Decker, SAB Executive Director, SSMC3, Room 11230, 1315 East-West Hwy., Silver Spring, MD 20910.

SUPPLEMENTARY INFORMATION: The NOAA Science Advisory Board (SAB) was established by a Decision Memorandum dated September 25, 1997, and is the only Federal Advisory Committee with responsibility to advise the Under Secretary of Commerce for Oceans and Atmosphere on strategies for research, education, and application of science to operations and information services. SAB activities and advice provide necessary input to ensure that National Oceanic and Atmospheric Administration (NOAA) science programs are of the highest quality and provide optimal support to resource management.

Matters To Be Considered: The meeting will include the following topics: (1) Discussion of the Revised Ecosystem-Based Fisheries Management Report from the Ecosystem Sciences and Management Working Group; and (2) Proposed Language for the Transmittal Letter for the Review Report on the Cooperative Institute for Marine Ecosystems and Climate. For the latest agenda, please visit the SAB Web site at *http://www.sab.noaa.gov.*

FOR FURTHER INFORMATION CONTACT: Dr. Cynthia Decker, Executive Director, Science Advisory Board, NOAA, Rm. 11230, 1315 East-West Highway, Silver Spring, Maryland 20910. (Phone: 301–734–1156, Fax: 301–713–1459, Email: *Cynthia.Decker@noaa.gov*).

Dated: May 27, 2014.

Jason Donaldson,

Chief Financial Officer and Chief Administrative Officer, Office of Oceanic and Atmospheric Research, National Oceanic and Atmospheric Administration.

[FR Doc. 2014–12732 Filed 5–30–14; 8:45 am]

BILLING CODE 3510–KD–P

DEPARTMENT OF COMMERCE

National Oceanic and Atmospheric Administration

RIN 0648–XD315

Marine Fisheries Advisory Committee

AGENCY: National Marine Fisheries Service (NMFS), National Oceanic and Atmospheric Administration (NOAA), Commerce.

ACTION: Notice of open public meetings.

SUMMARY: This notice sets forth the schedule and proposed agenda of two forthcoming meetings of the Marine Fisheries Advisory Committee (MAFAC). The members will discuss and provide advice on issues outlined in the agenda below.

DATES: The meetings are scheduled for June 12, 2014, 3–5 p.m. and June 17, 2014, 3–5 p.m., Eastern Daylight Time.

ADDRESSES: The public meeting will be conducted by telephone. Public access is available at 1315 East-West Highway, Silver Spring, MD 20910.

FOR FURTHER INFORMATION CONTACT: Any member of the public wishing to attend the public teleconference may contact Heidi Lovett, (301) 427–8004; email: *heidi.lovett@noaa.gov.*

SUPPLEMENTARY INFORMATION: The MAFAC was established by the Secretary of Commerce (Secretary), and, since 1971, advises the Secretary on all living marine resource matters that are the responsibility of the Department of Commerce. The charter and other information are located online at *http://www.nmfs.noaa.gov/ocs/mafac/.*

Matters To Be Considered

The Committee is convening to discuss recommendations for the reauthorization of the Magnuson-Stevens Fishery Conservation and Management Act for submission to the NOAA Fisheries Assistant Administrator. This agenda is subject to change.

Special Accommodations

These meetings are physically accessible to people with disabilities. Requests for sign language interpretation or other auxiliary aids should be directed to Heidi Lovett, 301–427–8004 by June 6, 2014.

Dated: May 23, 2014.

Eileen Sobeck,

Assistant Administrator for Fisheries, National Marine Fisheries Service.

[FR Doc. 2014–12597 Filed 5–30–14; 8:45 am]

BILLING CODE 3510–22–P

DEPARTMENT OF COMMERCE

National Oceanic and Atmospheric Administration

RIN 0648–XD319

Western Pacific Fishery Management Council; Public Meetings

AGENCY: National Marine Fisheries Service (NMFS), National Oceanic and Atmospheric Administration (NOAA), Commerce.

ACTION: Notice of public meetings and hearings.

SUMMARY: The Western Pacific Fishery Management Council (Council) will hold meetings of its 116th Scientific and Statistical Committee (SSC) and its 160th Council meeting to take actions on fishery management issues in the Western Pacific Region. The Council will also convene meetings of the Social Science Planning Committee (SSPC), Marine Planning and Climate Change Committee (MPCC), Advisory Panels (AP), Fishing Industry Advisory Panel (FIAP), Fishery Data Collection and Research Committee (FDCRC) and the Council's Pelagic Standing Committee and Executive and Budget Standing Committee.

DATES: The meetings will be held from June 16 through June 27, 2014. For specific dates, times and agendas, see **SUPPLEMENTARY INFORMATION.**

ADDRESSES: The SSPC, MPCC Committee, 116th SSC, AP, FIAP, FDCRC and Standing Committee meetings will be held at the Council office, 1164 Bishop Street, Suite 1400, Honolulu, HI 96813, telephone: (808) 522–8220;

The 160th Council meeting will be held at the Laniakea YWCA-Fuller Hall, 1040 Richards Street, Honolulu, HI 96813, telephone: (808) 538–7061;

The Fishers Forum will be held at the Harbor View Center, Pier 38, 1129 North Nimitz Highway, Honolulu, HI 96817, telephone: (808) 983–1200.

Background documents will be available from, and written comments should be sent to, Mr. Arnold Palacios, Chair, Western Pacific Fishery Management Council, 1164 Bishop Street, Suite 1400, Honolulu, HI 96813, telephone: (808) 522–8220 or fax: (808) 522–8226.

FOR FURTHER INFORMATION CONTACT: Kitty M. Simonds, Executive Director; telephone: (808) 522–8220.

SUPPLEMENTARY INFORMATION: The SSPC meeting will be held on June 16, 2014, between 8:30 a.m. and 5 p.m. The MPCC will be held on June 16, 2014, between 1 p.m. and 3 p.m. The 116th SSC meeting on June 17–19, 2014 between 8:30 a.m. and 5 p.m.; the AP meeting on June 19–20, 2014, between 1 p.m. and 5 p.m. on June 19 and between 8 a.m. and 5 p.m. on June 20; the FIAP meeting on June 23, 2014 between 10 a.m. and 4 p.m.; the FDCRC meeting on June 24, 2014 between 9 a.m. and 11 a.m.; the Council's Pelagics and International Standing Committee on June 24, 2014 between 1 p.m. and 3 p.m. and Executive and Budget Standing Committee between 3 p.m. and 5 p.m. June 24, 2014; and the 160th Council Meeting will be held between 8:30 a.m. and 5 p.m. on June 25–27, 2014. In addition, the Council will host a Fishers Forum on June 25, 2014 between 6 p.m. and 9 p.m.

In addition to the agenda items listed here, the SSC and Council will hear recommendations from Council advisory groups. Public comment periods will be provided throughout the agendas. The order in which agenda items are addressed may change. The meetings will run as late as necessary to complete scheduled business.

Schedule and Agenda for the SSPC Meeting

8:30 a.m.–5 p.m., Monday, June 16, 2014

1. Introduction
2. Approval of the Agenda
3. Overview of the Council and its Fisheries
   - A. Council and Federally Managed Fisheries in the Western Pacific
   - B. Fisheries Social Science in the Region
   - C. Role of the Committee
4. Committee Discussion on Current and Emerging Human Dimensions Issues Related to Regional Fisheries Management
   - A. Fishing Communities
   - B. Adaptation to Potential Impacts of Climate Change
   - C. Integrated Assessments
   - D. Marine Protected Areas and Fishermen—Participation in Planning; Effects
   - E. Modern Socio-Cultural Importance of Fish
5. Council's Human Dimensions Program and Research Priority Planning
   - A. Council's 5-Year Research

Priorities
B. General Priorities for the Human Dimensions Program 2015–2019
6. Other Business and Next Meeting
A. Upcoming Meeting of the Social Scientists in Regional Fisheries Management (December, 2014)
7. Public Comment
8. Committee Discussion and Recommendations

The order in which agenda items are addressed may change. The Committee will meet as late as necessary to complete scheduled business.

Schedule and Agenda for the MPCC Meeting

1 p.m.–3 p.m., Monday, June 16, 2014

1. Introduction
2. Approval of the Agenda
3. Overview of the Council and Its Fisheries
A. Council and Federally Managed Fisheries in the Western Pacific
B. Council Initiatives Related to Marine Planning
C. Council Initiatives and Actions Related to Climate Change
D. Role of the Committee
4. Committee Discussion on Current and Emerging Marine Planning and Climate Change Issues Related to Regional Fisheries Management
5. Public Comment
6. Committee Discussion and Recommendations
7. Other Business and Next Meeting

The order in which agenda items are addressed may change. The Committee will meet as late as necessary to complete scheduled business.

Schedule and Agenda for 116th SSC Meeting

8:30 a.m.–5 p.m., Tuesday, June 17, 2014

1. Introductions
2. Approval of Draft Agenda and Assignment of Rapporteurs
3. Status of the 115th SSC Meeting Recommendations
4. Report from the Pacific Islands Fisheries Science Center Director
5. Insular Fisheries
A. CNMI Bottomfish Amendment (Action Item)
B. Main Hawaiian Islands (MHI) Deep 7 Stock Assessment
C. Regulatory changes to the MHI bottomfish fishery (Action Item)
D. Main Hawaiian Island (MHI) Bottomfish Restricted Fishing Area (BRFA) Management Plan
E. Public Comment
F. SSC Discussion and Recommendations
6. Program Planning
A. Stock Assessment Prioritization Review (Action Item)
B. Specifying Acceptable Biological Catches for the Crustacean, Precious Corals, MHI Deep 7, and Hawaii Non-Deep 7 Bottomfish in the Western Pacific Region (Action Item)
C. Evaluation of 2013 Catch Relative to 2013 Annual Catch Limits (Action Item)
D. Report on the Hawaii and Joint Archipelagic Plan Team Meeting
E. Regional Strategic Plan for Fishery Data Collection and Research
F. Council 5-Year Research Priorities
1. Ecosystem and Stocks
2. Human Communities
3. Protected Species
G. Public Comment
H. SSC Discussion and Recommendations

8:30 a.m.–5 p.m., Wednesday, June 18, 2014

7. Pelagic Fisheries
A. Modification of American Samoa Large Vessel Prohibited Area (Action Item)
B. Experimental Fishing Permit—American Samoa Large Vessel Prohibited Area (Action Item)
C. Overfishing Determination for Western & Central Pacific Ocean North Pacific Striped Marlin (Action Item)
D. Longline Fisheries Quarterly Reports
1. Hawaii
2. American Samoa
E. Cost-Earning Study of Hawaii Longline Fishery
F. Bigeye Tuna Movement Workshop
G. Disproportionate Burden Workshop
H. International Fisheries
1. Inter-American Tropical Tuna Commission (IATTC) Science Committee
I. Public Comment
J. SSC Discussion and Recommendations
8. Protected Species
A. Updated Data on False Killer Whale Distribution and Stock Boundaries
B. Analysis of Impacts under the Deep-Set Longline Biological Opinion and Marine Mammal Protection Act (MMPA) Permit
C. Updates on Endangered Species Act (ESA) and MMPA Actions
1. Update on the False Killer Whale Take Reduction Plan Implementation
2. Final Determination To List 66 Species of Coral Under the ESA
3. Final Determination To List Scalloped Hammerhead Shark Under the ESA
4. Green Turtle Status Review
5. North Pacific Humpback Whale Status Review
6. Other Relevant Actions
D. Public Comment
E. SSC Discussion and Recommendations

8:30 a.m.–12 Noon, Thursday, June 19, 2014

9. Other Business
A. 117th SSC Meeting
10. Summary of SSC Recommendations to the Council

Schedule and Agenda for AP Meeting

2 p.m.–5 p.m., Thursday, June 19, 2014

1. Welcoming Remarks
2. Overview and Introductions
3. Meeting Expectations
4. Advisory Panel Review
A. Presentation of Plan
1. Membership
2. Duties and Responsibilities
3. Meetings and Reports
4. Communication and Outreach
B. 2015–18 AP Solicitation Application Review
C. Next Steps
5. Public Hearing
6. Discussion and Recommendations

8 a.m.–5 p.m., Friday, June 20, 2014

7. Report on Fishery/Community Issues and Council Support
A. American Samoa
B. Guam
C. Commonwealth of the Northern Mariana Islands (CNMI)
D. Hawaii-Pacific Remote Island Areas (PRIA)
8. Science Presentation ''Status of Nearshore Stocks''
9. Council Meeting Items for Discussion and Action
A. Stock Assessment Prioritization
B. ACL Specifications
1. Crustacean, Precious Corals, Carol Reef, Hawaii Non-Deep 7 Bottomfish
2. Hawaii Deep 7 Bottomfish
3. Evaluation of ACLs and Catch
C. CNMI Bottomfish Closure Modification
D. American Samoa Large Vessel Prohibited Area
1. Proposed Modifications
2. Experimental Fishing Permit
E. Overfished Determination of Striped Marlin
F. Protected Species
1. Green Sea Turtle Management Plan
2. Update on Endangered Species Act Petitions
3. Discussion on Nearshore Interactions With Protected Species
10. Other Business

11. Public Hearing
12. Discussion and Recommendations

Schedule and Agenda for FIAP Meeting

10 a.m.–4 p.m., Monday, June 23, 2014

1. Welcome and Introductions
2. Overview of the Fishing Industry Advisory Panel Role and Responsibilities
3. Council 5 Year Program Plan
4. Magnuson Stevens Act Reauthorization
5. Round Table Discussion on Fishing and Seafood Industry Issues
   A. American Samoa
   B. CNMI
   C. Guam
   D. Hawaii
6. Pelagics and International Management
   A. International Management—Illegal, Unregulated and Unreported (IUU) Impact on Domestic Markets
   B. Billfish Act
   C. Shark Fisheries and Shark-Finning
   D. Ahi Minimum Size
7. Seafood Issues
   A. NOAA Seafood Certification
   B. 50% by 5 Initiative
8. Bottomfish Management
9. Protected Species Issues
   A. Marine Mammals
   B. Status of Humpback Whale and Green Sea Turtle Delistings
10. Fisheries Development
11. Other Business
12. Public Comment
13. Discussion and Recommendations

Schedule and Agenda for FDCRC Meeting

9 a.m.–11 a.m., Tuesday, June 24, 2014

1. Welcome Remarks
2. Introductions
3. Appointment of the FDCRC Chair
4. Review of the Standard Operating Policy and Procedures
5. Report on the Inaugural Meeting of the FDCRC Technical Committee
6. Regional Strategic Plan for Fishery Data Collection and Research
7. Endorsement and Signing of the Strategic Plan
8. Discussions and Recommendations

Schedule for Council Standing Committee Meetings

1 p.m.–3 p.m., Tuesday, June 24, 2014

Executive and Budget Standing Committee

3 p.m.–5 p.m., Tuesday, June 24, 2014

Program Planning Standing Committee

Schedule and Agenda for 160th Council Meeting

8:30 a.m.–5 p.m., Wednesday, June 25, 2014

1. Welcome and Introductions
2. Opening Remarks
3. Approval of the 160th Agenda
4. Approval of the 159th Meeting Minutes
5. Executive Director's Report
6. Agency Reports
   A. National Marine Fisheries Service
   1. NMFS Agency Report
   2. Pacific Islands Regional Office
   3. Pacific Islands Fisheries Science Center (PIFSC)
   B. NOAA General Counsel, Pacific Island Section
   C. U.S. Fish and Wildlife Service
   D. Enforcement
   1. U.S. Coast Guard
   2. NMFS Office for Law Enforcement
   3. NOAA General Counsel for Enforcement
   E. Public Comment
   F. Council Discussion and Action
7. Program Planning and Research
   A. Stock Assessment Prioritization Review (Action Item)
   B. Specifying Annual Catch Limits for the Crustacean, Precious Corals, Coral Reef, Hawaii Non-Deep 7 Bottomfish in the Western Pacific Region (Action Item)
   D. Evaluation of 2013 Catch Relative to 2013 ACLs (Action Item)
   E. Proposed NOAA Recreational Saltwater Fishing Policy
   F. Council 5-Year Research Priorities
   1. Ecosystem and Stocks
   2. Human Communities
   3. Protected Species
   G. Marine Fisheries Advisory Committee (MAFAC) National Seafood Certification
   H. National, Regional and International Education
   I. Advisory Group Reports and Recommendations
   1. Joint Archipelagic Plan Team
   2. Joint Advisory Panel
   3. Fishery Data Collection and Research Committee
   4. Fishing Industry Advisory Committee
   5. Report of the Social Science Research Committee
   6. Marine Planning and Climate Change Committee
   J. SSC Recommendations
   K. Public Hearing
   L. Council Discussion and Action

6 p.m.–9 p.m., Wednesday, June 25, 2014

Fishers Forum on Non-Commercial Fishing & Recreational Saltwater Fishing Policy Listening Session

8:30 a.m.–5 p.m., Thursday, June 26, 2014

8. American Samoa Archipelago
   A. Motu Lipoti
   B. Fono Report
   C. Enforcement Issues
   D. Community Activities and Issues
   1. Update on Community Fisheries Development
   2. Seafood Market Training Workshop
   E. Fishery Disaster Relief Funds
   F. Marine Conservation Plan
   G. Education and Outreach Initiatives
   H. American Samoa National Marine Sanctuary
   I. Rose Atoll Marine National Monument
   J. Advisory Group Reports and Recommendations
   1. American Samoa Regional Ecosystem Advisory Committee
   2. Joint AP
   3. Joint Archipelagic Plan Team
   4. FIAC
   5. SSRC
   6. MPCC
   K. SSC Recommendations
   L. Public Comment
   M. Council Discussion and Action
9. Hawaii Archipelago
   A. Moku Pepa
   B. Legislative Report
   C. Enforcement
   D. Main Hawaiian Island (MHI) Bottomfish
   1. Report on MHI Bottomfish Stock Assessment
   2. Deep-7 ACL Specification (Action Item)
   3. State of Hawaii Bottomfish Restricted Fishing Areas (BRFAs) Management Plan
   4. Regulatory Changes for MHI Bottomfish (Action Item)
   E. Community Projects, Activities and Issues
   1. Supporting the Aha Moku System
   2. Outreach and Education Report
   F. Hawaiian Humpback Whale National Marine Sanctuary
   G. Papahanaumokuakea Marine National Monument
   H. Habitat Blue Print—West Hawaii
   I. Joint AP
   1. Hawaii Plan Team
   2. Archipelagic Plan Team
   3. FIAC
   5. SSRC
   6. MPCC
   J. SSC Recommendations
   K. Public Comment
   L. Council Discussion and Action
10. Protected Species
   A. Updated Data on False Killer Whale Distribution and Stock Boundaries
   B. Analysis of Impacts under the Deep-set Longline Biological Opinion and MMPA Permit
   C. Updates on ESA and MMPA Actions
   1. Update on the False Killer Whale Take Reduction Plan Implementation

2. Final Determination to List 66 Species of Coral as Endangered or Threatened under the ESA
3. Final Determination to List Scalloped Hammerhead Shark under the ESA
4. Green Turtle Status Review
5. North Pacific Humpback Whale Petition
6. Other Relevant Actions
D. Management of Green Sea Turtles
E. Advisory Group Recommendations
1. Joint AP
2. Pelagic PT
3. Archipelagic PT
4. FIAC
5. SSRC
6. MPCC
F. SSC Recommendations
G. Public Comment
H. Council Discussion and Action
11. Public Comment on Non-Agenda Items

9 a.m. to 5 p.m., Friday June 27, 2014

12. Mariana Archipelago
A. Guam
1. Isla Informe
2. Legislative Report
3. Enforcement Issues
4. Report on Guam Projects and Programs
a. Fisheries Development Projects
b. Data Collection Projects
5. Habitat Blue Print—Manell-Gues
B. Commonwealth of the Northern Mariana Islands
1. Arongol Falu
2. Legislative Report
3. Enforcement Issues
4. Bottomfish Area Closure Modification (Action Item)
5. Status Report on CNMI Projects and Programs
a. Data Collection Efforts
C. Guam and CNMI Marine Conservation Plans
D. Marianas Trench Marine National Monument: Islands, Volcanic and Trench Units
E. Education and Outreach Initiatives
F. Advisory Group Reports and Recommendations
1. Joint AP
2. Archipelagic PT
3. FIAC
4. SSRC
5. MPCC
G. SSC Recommendations
H. Public Hearing
I. Council Discussion and Action
13. Pelagic & International Fisheries
A. Modification to the American Samoa large vessel prohibited area (Action Item)
B. Experimental Fishing Permit—American Samoa Large Vessel Prohibited Area (Action Item)
C. Overfished determination for WCPO NP striped marlin (Action Item)
D. Longline Fisheries Quarterly Reports
1. Hawaii
2. American Samoa
E. Bigeye Tuna Movement Workshop
F. Disproportionate Burden Workshop
G. International Fisheries
1. IATTC Science Committee
H. Advisory Group Recommendations
1. Joint AP
2. Pelagic PT
3. FIAC
4. SSRC
5. MPCC
I. SSC Recommendations
J. Standing Committee Recommendations
K. Public Hearing
L. Council Discussion and Recommendations
14. Administrative Matters
A. Financial Reports
B. Administrative Reports
C. Standard Operating Practices and Procedures (SOPP) Review and Changes
D. Council Family Changes
E. Advisory Panel Review and Plan
F. Meetings and Workshops
1. May Council Coordinating Committee
G. Report on Magnuson-Stevens Act (MSA) Reauthorization
H. Other Business
I. Standing Committee Recommendations
J. Public Comment
K. Council Discussion and Action
15. Other Business

Non-Emergency issues not contained in this agenda may come before the Council for discussion and formal Council action during its 160th meeting. However, Council action on regulatory issues will be restricted to those issues specifically listed in this document and any regulatory issue arising after publication of this document that requires emergency action under section 305(c) of the Magnuson-Stevens Act, provided the public has been notified of the Council's intent to take action to address the emergency.

Special Accommodations

These meetings are physically accessible to people with disabilities. Requests for sign language interpretation or other auxiliary aids should be directed to Kitty M. Simonds, (808) 522–8220 (voice) or (808) 522–8226 (fax), at least 5 days prior to the meeting date.

Authority: 16 U.S.C. 1801 *et seq.*

Dated: May 27, 2014.

William D. Chappell,

Acting Deputy Director, Office of Sustainable Fisheries, National Marine Fisheries Service.

[FR Doc. 2014–12615 Filed 5–30–14; 8:45 am]

BILLING CODE 3510–22–P

DEPARTMENT OF COMMERCE

National Oceanic and Atmospheric Administration

RIN 0648–XD321

New England Fishery Management Council; Public Meeting

AGENCY: National Marine Fisheries Service (NMFS), National Oceanic and Atmospheric Administration (NOAA), Commerce.

ACTION: Notice of a public meeting.

SUMMARY: The New England Fishery Management Council (Council) will hold a three-day meeting, on June 17–19, 2014, to consider actions affecting New England fisheries in the exclusive economic zone (EEZ).

DATES: The meeting will be held on Tuesday, Wednesday and Thursday, starting at 9:30 a.m. on Tuesday, June 17, and 8:30 a.m. on Wednesday and Thursday, June 18 and 19.

ADDRESSES: The meeting will be held at the Holiday Inn by the Bay, 88 Spring Street, Portland, ME 04101; telephone: (207) 775–2311, and fax: (207) 761–8224. See *www.innbythebay.com* for online information about the venue.

Council Address: New England Fishery Management Council, 50 Water Street, Mill 2, Newburyport, MA 01950; telephone: (978) 465–0492.

FOR FURTHER INFORMATION CONTACT: Thomas A. Nies, Executive Director, New England Fishery Management Council; telephone: (978) 465–0492.

SUPPLEMENTARY INFORMATION:

Tuesday, June 17, 2014

The Council meeting will begin with introductions and brief reports from the New England Fishery Management Council Chairman (NEFMC) and Executive Director, the NOAA Fisheries Regional Administrator, the Northeast Fisheries Science Center and Mid-Atlantic Fishery Management Council liaisons, NOAA General Counsel and Law Enforcement, and representatives of the Atlantic States Marine Fisheries Commission and the U.S Coast Guard. A brief report from the Council Chairman and Executive Director will follow concerning the most recent meetings of the Northeast Region Coordinating Council and the Council Coordination

Committee. Prior to a lunch break, there will be an opportunity for the public to provide brief comments on items that are relevant to Council business, but are otherwise not listed on the published agenda. The afternoon session on this day will begin with a progress report from the Council's Ecosystem Based Fisheries Management Committee. The Council also will hear two reports based on topics related to the International Commission for the Conservation of Atlantic Tunas last meeting in South Africa. Next, there will be an update on the development of a risk policy that will serve as guidance to the Council and its Scientific and Statistical Committee when addressing scientific and management uncertainty in setting annual catch limits for NEFMC-managed species. During this same afternoon there will be a presentation on a NOAA Fisheries/Greater Atlantic Regional Fisheries Office (GARFO)-developed Vessel Baseline Amendment and Council approval of the range of management alternatives to be further analyzed and considered. The day will conclude with a summary of NOAA Fisheries efforts to develop a National Policy for Recreational Fishing.

Wednesday, June 18, 2014

The second day of the Council meeting will begin with a review and possible development of NEFMC comments on the U.S. Senate staff draft discussion document circulated by members of Congress in preparation for reauthorizing the Magnuson-Stevens Fishery Conservation and Management Act. Two reports on electronic monitoring on board fishing vessels will then be presented. The first will provide a summary of outcomes resulting from a recent electronic monitoring workshop; and the second will be a report on the activities of the NEFMC's Groundfish Electronic Monitoring Working Group. The Council's Groundfish Committee will begin their report prior to a lunch break. It will request approval of Framework Adjustment 52 to the Northeast Multispecies (Groundfish) FMP, an action that would revise the commercial groundfish fishery accountability measures for southern and northern windowpane flounder stocks. During the discussion of Amendment 18 to the Groundfish FMP, the Council intends to approve the range of alternatives (for fleet diversity and accumulation limits) for further analysis in a Draft Environmental Impact Statement (DEIS). Last under this agenda item, the NEFMC will initiate action (Framework Adjustment 53 to the Groundfish FMP) on specifications for the three groundfish stocks managed under the U.S. Resource Sharing Understanding for 2015; and catch limits for Gulf of Maine haddock, two winter flounder stocks, and pollock for 2015-17. Other measures will address the allocation of the windowpane flounder annual catch limits to other components of the fishery (sub-ACLs), accountability measures for those fisheries, and likely additional fishery management measures associated with these issues.

Thursday, June 19, 2014

Council actions on the final day of the meeting will focus on the Atlantic Sea Scallop FMP. The NEFMC will: Initiate Scallop Framework Adjustment 26 (specifications for fishing years 2015–16 and the default measures that could apply); review and approve a Council policy that outlines the process for the NEFMC's scallop research set-aside program; approve research set-aside priorities for fishing years 2015–16; and receive a performance report that reviews the sea scallop limited access general category IFQ fishery for 2010–12. Any other outstanding business will be addressed by the Council prior to adjournment.

Although other non-emergency issues not contained in this agenda may come before this Council for discussion, those issues may not be the subjects of formal action during this meeting. Council action will be restricted to those issues specifically listed in this notice and any issues arising after publication of this notice that require emergency action under section 305(c) of the Magnuson-Stevens Act, provided that the public has been notified of the Council's intent to take final action to address the emergency.

Special Accommodations

This meeting is physically accessible to people with disabilities. Requests for sign language interpretation or other auxiliary aids should be directed to Thomas A. Nies (see **ADDRESSES**) at least 5 days prior to the meeting date.

Dated: May 28, 2014.

Tracey L. Thompson,

Acting Deputy Director, Office of Sustainable Fisheries, National Marine Fisheries Service.

[FR Doc. 2014–12654 Filed 5–30–14; 8:45 am]

BILLING CODE 3510–22–P

DEPARTMENT OF COMMERCE

National Oceanic and Atmospheric Administration

RIN 0648–XS35

Marine Mammals; File No. 14450

AGENCY: National Marine Fisheries Service (NMFS), National Oceanic and Atmospheric Administration (NOAA), Commerce.

ACTION: Notice; issuance of permit amendment.

SUMMARY: Notice is hereby given that a major amendment to Permit No. 14450–01 has been issued to the National Marine Fisheries Service's Southeast Fisheries Science Center (SEFSC), 75 Virginia Beach Drive, Miami, FL 33149 [Principal Investigator: Dr. Keith Mullin].

ADDRESSES: The permit amendment and related documents are available for review upon written request or by appointment in the following offices:

Permits and Conservation Division, Office of Protected Resources, NMFS, 1315 East-West Highway, Room 13705, Silver Spring, MD 20910; phone (301) 427–8401; fax (301) 713–0376;

FOR FURTHER INFORMATION CONTACT: Jennifer Skidmore or Amy Hapeman, (301) 427–8401.

SUPPLEMENTARY INFORMATION: On March 14, 2014, notice was published in the **Federal Register** (79 FR 14484) that a request for an amendment Permit No. 14450 to conduct research on cetaceans had been submitted by the above-named applicant. The requested permit amendment has been issued under the authority of the Marine Mammal Protection Act of 1972, as amended (16 U.S.C. 1361 *et seq.*), the regulations governing the taking and importing of marine mammals (50 CFR part 216), the Endangered Species Act of 1973, as amended (ESA; 16 U.S.C. 1531 *et seq.*), and the regulations governing the taking, importing, and exporting of endangered and threatened species (50 CFR parts 222–226).

The permit amendment authorizes takes by harassment during satellite tagging to support NMFS stock assessment research on ESA-listed large whales that occur in U.S. and international waters of the western North Atlantic. Up to four attempts may be made to attach a tag to an animal. Directed satellite tagging efforts may be conducted to tag 20 sperm whales and 5 North Atlantic right whales. Opportunistic tagging would occur of 10 fin, 5 blue, 5 sei, and 10 humpback whales when encountered during other

SEFSC assessment surveys. The permit expires on February 28, 2019.

In compliance with the National Environmental Policy Act of 1969 (42 U.S.C. 4321 *et seq.*), a final determination has been made that the activity proposed is categorically excluded from the requirement to prepare an environmental assessment or environmental impact statement.

As required by the ESA, issuance of this permit was based on a finding that such permit: (1) Was applied for in good faith; (2) will not operate to the disadvantage of such endangered species; and (3) is consistent with the purposes and policies set forth in section 2 of the ESA.

Dated: May 28, 2014.

Tammy C. Adams,

Acting Chief, Permits and Conservation Division, Office of Protected Resources, National Marine Fisheries Service.

[FR Doc. 2014–12680 Filed 5–30–14; 8:45 am]

BILLING CODE 3510–22–P

DEPARTMENT OF EDUCATION

[Docket No.: ED–2014–ICCD–0081]

Agency Information Collection Activities; Comment Request; Family Educational Rights and Privacy Act (FERPA) Regulatory Requirements

AGENCY: Office of Management (OM), Department of Education (ED).

ACTION: Notice.

SUMMARY: In accordance with the Paperwork Reduction Act of 1995 (44 U.S.C. chapter 3501 *et seq.*), ED is proposing an extension of an existing information collection.

DATES: Interested persons are invited to submit comments on or before August 1, 2014.

ADDRESSES: Comments submitted in response to this notice should be submitted electronically through the Federal eRulemaking Portal at *http://www.regulations.gov* by selecting Docket ID number ED–2014–ICCD–0081 or via postal mail, commercial delivery, or hand delivery. If the regulations.gov site is not available to the public for any reason, ED will temporarily accept comments at *ICDocketMgr@ed.gov*. Please note that comments submitted by fax or email and those submitted after the comment period will not be accepted; ED will only accept comments during the comment period in this mailbox when the regulations.gov site is not available. Written requests for information or comments submitted by postal mail or delivery should be addressed to the Director of the Information Collection Clearance Division, U.S. Department of Education, 400 Maryland Avenue SW., LBJ, Mailstop L–OM–2–2E319, Room 2E105, Washington, DC 20202.

FOR FURTHER INFORMATION CONTACT: For specific questions related to collection activities, please contact Regina Miles, 202–260–3887.

SUPPLEMENTARY INFORMATION: The Department of Education (ED), in accordance with the Paperwork Reduction Act of 1995 (PRA) (44 U.S.C. 3506(c)(2)(A)), provides the general public and Federal agencies with an opportunity to comment on proposed, revised, and continuing collections of information. This helps the Department assess the impact of its information collection requirements and minimize the public's reporting burden. It also helps the public understand the Department's information collection requirements and provide the requested data in the desired format. ED is soliciting comments on the proposed information collection request (ICR) that is described below. The Department of Education is especially interested in public comment addressing the following issues: (1) Is this collection necessary to the proper functions of the Department; (2) will this information be processed and used in a timely manner; (3) is the estimate of burden accurate; (4) how might the Department enhance the quality, utility, and clarity of the information to be collected; and (5) how might the Department minimize the burden of this collection on the respondents, including through the use of information technology. Please note that written comments received in response to this notice will be considered public records.

Title of Collection: Family Educational Rights and Privacy Act (FERPA) Regulatory Requirements.

OMB Control Number: 1880–0543.

Type of Review: An extension of an existing information collection.

Respondents/Affected Public: State, Local, or Tribal Governments.

Total Estimated Number of Annual Responses: 20,293,021.

Total Estimated Number of Annual Burden Hours: 1,914,593.

Abstract: The Family Educational Rights and Privacy Act (FERPA) requires that subject educational agencies and institutions notify parents and students of their rights under FERPA and requires that they record disclosures of personally identifiable information from education records, with certain exceptions.

Dated: May 27, 2014.

Stephanie Valentine,

Acting Director, Information Collection Clearance Division, Privacy, Information and Records Management Services, Office of Management.

[FR Doc. 2014–12599 Filed 5–30–14; 8:45 am]

BILLING CODE 4000–01–P

DEPARTMENT OF EDUCATION

Final Waiver and Extension of the Project Period for the Literacy Information and Communication System Regional Professional Development Centers

[Catalog of Federal Domestic Assistance (CFDA) Number: 84.191B.]

AGENCY: Career, Technical, and Adult Education, Department of Education.

ACTION: Final Waiver and Extension.

SUMMARY: For the 36-month grant projects funded in fiscal year (FY) 2011, using FY 2010 funds, under the Literacy Information and Communication System (LINCS) Regional Professional Development Centers (RPDC) program, the Secretary hereby waives the restriction against project period extensions involving the obligation of additional Federal funds, and extends the project period of the four LINCS RPDC grants for an additional 12 months. This will enable the four current LINCS RPDC grantees that received awards under the FY 2011 competition to seek a continuation award for one additional year through FY 2015 with FY 2014 funds; and we will not announce a new LINCS RPDC competition in FY 2014.

DATES: This final waiver and extension of the project period is effective June 2, 2014.

FOR FURTHER INFORMATION CONTACT: Patricia Bennett, U.S. Department of Education, 400 Maryland Ave. SW., Room 11013, Potomac Center Plaza, Washington, DC 20202. Telephone: (202) 245–7758 or by email at: *patricia.bennett@ed.gov.*

If you use a telecommunications device for the deaf (TDD) or a text telephone (TTY), call the Federal Relay Service (FRS), toll free, at 1–800–877–8339.

SUPPLEMENTARY INFORMATION: On March 12, 2014, we published in the **Federal Register** (79 FR 14017) (March 2014 proposed waiver) a proposed waiver of 34 CFR 75.261(a) and (c)(2), which restricts project period extensions involving the obligation of additional Federal funds, as it applies to the LINCS RPDC. The Secretary also proposed to

extend the project period of LINCS RPDC grants for an additional 12 months to enable the four current LINCS RPDC grantees that received awards under the FY 2011 competition to seek a continuation award for one additional year through FY 2015 with FY 2014 funds.

Public Comment: In the March 2014 proposed waiver, the Secretary invited comments about the potential effect that this waiver and extension of the project period would have on LINCS RPDC and on applicants that may be eligible to apply for grant awards under any new LINCS RPDC notice inviting applications, should there be one. We received five comments in response, one of which did not address the proposed waiver and extension. Generally, we do not address comments that raise concerns not related to the proposed waiver and extension.

Analysis of Comments and Changes:

Comment: The four commenters who addressed the proposed waiver and extension: supported it, discussed the benefits and accomplishments of current LINCS RPDC projects, and stated that an extension of the current project period would allow grantees to continue their work and expand on their accomplishments.

Response: We agree with the four commenters that extending the current LINCS RPDC grant period will allow current LINCS RPDC grantees to request continuation awards with which they could continue to work toward accomplishing the goals and objectives stated in their 2011 LINCS RPDC grant applications.

Change: None.

Background

In FY 2011, using FY 2010 funds, we funded four LINCS RPDC grants, based on the requirements established in the notice for applications for new awards for LINCS RPDCs, published in the **Federal Register** on June 30, 2011 (76 FR 38374) (June 2011 notice), as authorized under title II of the Workforce Investment Act of 1998 (WIA), the Adult Education and Family Literacy Act (AEFLA) (20 U.S.C. 9253(2)(H)). Each RPDC serves one of the following four regions:

(1) *Region 1*—Connecticut, Delaware, District of Columbia, Maine, Maryland, Massachusetts, New Hampshire, New Jersey, New York, Pennsylvania, Puerto Rico, Rhode Island, Vermont, and the Virgin Islands.

(2) *Region 2*—Alabama, Arkansas, Florida, Georgia, Kentucky, Louisiana, Mississippi, North Carolina, Oklahoma, South Carolina, Tennessee, Texas, Virginia, and West Virginia.

(3) *Region 3*—Illinois, Indiana, Iowa, Kansas, Michigan, Minnesota, Missouri, Nebraska, North Dakota, Ohio, South Dakota, and Wisconsin.

(4) *Region 4*—Alaska, Arizona, California, Colorado, Hawaii, Idaho, Montana, Nevada, New Mexico, Oregon, Utah, Washington, Wyoming, Guam, American Samoa, the Commonwealth of the Northern Mariana Islands, and the Republic of Palau.

Through the LINCS RPDC grants, we support evidence-based virtual or in-person adult education professional development (AEPD) activities to assist educators who provide adult education services [1] or adult education instruction [2] to adult learners (adult educators).

In addition, the LINCS RPDCs support each eligible agency responsible for administering or supervising policy for adult education and literacy programs under section 203(4) of the AEFLA [3] (eligible agency), and adult education and related organizations within each State [4] and outlying area [5] by—

(1) Disseminating information on the materials and the AEPD in the LINCS Resource Collection [6] to each eligible agency in the region that the grantee serves and to adult education and related organizations within each State and outlying area in that region;

(2) Collaborating closely with eligible agencies to organize and deliver virtual or in-person AEPD; and

(3) Fostering the use of new technologies, including virtual moderated communities of practice [7] (CoP), for adult educators.

The LINCS RPDCs provide substantial and direct operational involvement in the management of project implementation and on plans for AEPD and project activities, including by facilitating the collaboration between grantees and the Department's LINCS Resource Collection contractor and the LINCS technical services contractor.

For these four LINCS RPDC projects, the Secretary waives the requirement of 34 CFR 75.261(a) and (c)(2), the regulation that generally prohibits project period extensions involving the obligation of additional Federal funds, in order to extend the current LINCS RPDC project period for an additional 12 months.

The Secretary's waiver of 34 CFR 75.261(a) and (c)(2) and extension of the current LINCS RPDC project period means that: (1) Current LINCS RPDC grantees will be authorized to request in FY 2014 and receive LINCS RPDC continuation awards for one additional year through FY 2015; (2) we will not announce a new LINCS RPDC competition to make new awards in FY 2014; (3) the June 2011 notice will continue to govern current projects during the extension year; and (4) the four currently-approved applications selected based on the June 2011 notice will govern LINCS RPDC continuation activities.

The June 2011 notice: (1) Established a project period of up to 36 months and reiterated that funding for multi-year awards would be dependent on a grantee meeting the requirements of 34 CFR 75.253 (continuation of a multi-year project after the first budget period); (2) explained the requirements of the program; (3) described the evaluation and reporting requirements; and (4) established the Government Performance and Results Act (GPRA) performance indicators for the LINCS RPDCs.

With this final waiver and extension of the project period, the current four LINCS RPDC grantees may request continuation awards for one additional project year, through FY 2015, with FY 2014 funds Congress has appropriated under the current authority in section 243(2)(H) of the AEFLA. Any requests for continuation awards will be considered under the current authority and subject to the requirements of 34 CFR 75.253, including the requirement that each grantee demonstrate that it is making substantial progress performing its LINCS RPDC grant activities based on the requirements in the June 2011 notice.

We will make decisions regarding continuation awards based on information provided in grantee

[1] *Adult education services* (e.g., career counseling, transportation counseling, education counseling) are provided to adult learners by educators who may include staff of eligible providers identified in section 203(5) of the AEFLA, as well as State staff responsible for the implementation of adult education programs.

[2] *Adult education instruction* (e.g., instruction in basic literacy, mathematics, and English language skills) is provided to adult learners by educators who may include adult education teachers and other instructional personnel of eligible providers identified in section 203(5) of the AEFLA.

[3] Section 203(4) of the AEFLA defines the term ''eligible agency'' as the sole entity or agency in a State or an outlying area responsible for administering or supervising policy for adult education and literacy in the State or outlying area, respectively, consistent with the law of the State or outlying area, respectively.

[4] See section 203(17) of the AEFLA.

[5] See section 203(14) of the AEFLA.

[6] For more information on the LINCS Resource Collection, see *http://lincs.ed.gov/collections.*

[7] *Communities of practice* are groups of people who share a concern or a passion for something they do and learn how to do it better as they interact regularly (see *http://www.ewenger.com/theory/*).

requests for continuation awards, including information provided in program narratives, budgets and budget narratives, and performance reports. Any activities to be carried out during the continuation year must be consistent with, or be a logical extension of, the scope, goals, and objectives of, each grantee's application as approved in the 2011 LINCS RPDC competition.

Regulatory Flexibility Act Certification

The Secretary certifies that the waiver and extension and the activities required to support an additional year of funding will not have a significant economic impact on a substantial number of small entities.

The small entities that will be affected by this waiver and extension are the four currently-funded LINCS RPDC grantees and any potential applicants for LINCS RPDC grants in FY 2014.

The Secretary further certifies that the waiver and extension will not have a significant economic impact on these LINCS RPDC entities because the waiver and extension impose minimal compliance costs to extend projects already in existence, and the activities required to support the additional year of funding will not impose additional regulatory burdens or require unnecessary Federal supervision. Furthermore, the costs of carrying out these activities could be paid for with program funds.

Paperwork Reduction Act of 1995

This notice of waiver and extension does not contain any information collection requirements.

Intergovernmental Review

The LINCS RPDC is subject to Executive Order 12372 and the regulations in 34 CFR part 79.

Accessible Format: Individuals with disabilities can obtain this document in an accessible format (e.g., braille, large print, audiotape, or compact disc) on request to the contact person listed under **FOR FURTHER INFORMATION CONTACT**.

Electronic Access to This Document: The official version of this document is the document published in the **Federal Register**. Free Internet access to the official edition of the **Federal Register** and the Code of Federal Regulations is available via the Federal Digital System at: *www.gpo.gov/fdsys.* At this site you can view this document, as well as all other documents of this Department published in the **Federal Register**, in text or Adobe Portable Document Format (PDF). To use PDF you must have Adobe Acrobat Reader, which is available free at this site.

You may also access documents of the Department published in the **Federal Register** by using the article search feature at *www.federalregister.gov.* Specifically, through the advanced search feature at this site, you can limit your search to documents published by the Department.

Program Authority: 20 U.S.C. 9253(2)(H).

Dated: May 28, 2014.

Johan Uvin,

Deputy Assistant Secretary for Policy and Strategic Initiatives, Delegated Authority To Perform the Functions and Duties of the Assistant Secretary for Career, Technical, and Adult Education.

[FR Doc. 2014–12707 Filed 5–30–14; 8:45 am]

BILLING CODE 4000–01–P

DEPARTMENT OF ENERGY

Secretary of Energy Advisory Board

AGENCY: Department of Energy.

ACTION: Notice of open meeting.

SUMMARY: This notice announces an open meeting of the Secretary of Energy Advisory Board (SEAB). SEAB was reestablished pursuant to the Federal Advisory Committee Act (Pub. L. 92–463, 86 Stat. 770) (the Act). This notice is provided in accordance with the Act.

DATES: Friday, June 20, 2014; 9:00 a.m.–12:00 p.m.

ADDRESSES: Building TCS Conference Center, Argonne National Laboratory, 9700 South Cass Avenue, Lemont, Illinois 60439.

FOR FURTHER INFORMATION CONTACT: Karen Gibson, Designated Federal Officer, U.S. Department of Energy, 1000 Independence Avenue SW., Washington, DC 20585; telephone (202) 586–3787; email: *seab@hq.doe.gov.*

SUPPLEMENTARY INFORMATION:

Background: The Board was established to provide advice and recommendations to the Secretary on the Department's basic and applied research, economic and national security policy, educational issues, operational issues, and other activities as directed by the Secretary.

Purpose of the Meeting: This meeting is the quarterly meeting of the Board.

Tentative Agenda: The meeting will start at 9:00 a.m. on June 20th. The tentative meeting agenda includes updates on the work of the SEAB task forces, briefings on topics of interest from the Lab and DOE, and comments from the public. The meeting will conclude at 12:00 p.m. Agenda updates will be posted on the SEAB Web site: *www.energy.gov/seab.*

Public Participation: The meeting is open to the public. Individuals who would like to attend must RSVP to Karen Gibson no later than 5:00 p.m. on Thursday, June 12, 2014, by email at: *seab@hq.doe.gov.* Please provide your name, organization, citizenship, and contact information. Anyone attending the meeting will be required to present government issued identification. Individuals and representatives of organizations who would like to offer comments and suggestions may do so at the end of the meeting. Approximately 30 minutes will be reserved for public comments. Time allotted per speaker will depend on the number who wish to speak but will not exceed 5 minutes. The Designated Federal Officer is empowered to conduct the meeting in a fashion that will facilitate the orderly conduct of business. Those wishing to speak should register to do so beginning at 9:00 a.m. on June 20th.

Those not able to attend the meeting or who have insufficient time to address the committee are invited to send a written statement to Karen Gibson, U.S. Department of Energy, 1000 Independence Avenue SW., Washington, DC 20585, email to: *seab@hq.doe.gov.*

Minutes: The minutes of the meeting will be available by contacting Ms. Gibson. She may be reached at the postal address or email address above, or by visiting SEAB's Web site at *www.energy.gov/seab.*

Issued in Washington, DC, on May 23, 2014.

LaTanya R. Butler,

Deputy Committee Management Officer.

[FR Doc. 2014–12684 Filed 5–30–14; 8:45 am]

BILLING CODE 6450–01–P

DEPARTMENT OF ENERGY

Fusion Energy Sciences Advisory Committee

AGENCY: Office of Science, Department of Energy.

ACTION: Notice of Open Teleconference Meeting.

SUMMARY: This notice announces a teleconference meeting of the Fusion Energy Sciences Advisory Committee (FESAC). The Federal Advisory Committee Act (Pub. L. 92–463, 86 Stat.770) requires that public notice of these meetings be announced in the **Federal Register**.

DATES: Monday, June 16, 2014, 12:00 noon to 4:00 p.m. EDT.

ADDRESSES: Public participation is welcomed. Information concerning the call-in number can be found on the Web

site: *http://science.energy.gov/fes/fesac/meetings/* or by contacting Mr. Samuel J. Barish by email *sam.barish@science.doe.gov* or by phone (301) 903–2917.

FOR FURTHER INFORMATION CONTACT: Dr. Edmund J. Synakowski, Designated Federal Officer, FESAC, U.S. Department of Energy, Office of Science, Office of Fusion Energy Sciences, SC–24/Germantown Building, 1000 Independence Avenue SW., Washington, DC 20585–1290. Phone 301–903–4941; fax (301) 903–8584 or email: *ed.synakowski@science.doe.gov.*

SUPPLEMENTARY INFORMATION:

Purpose of the Meeting: To complete the charge given to the Committee in the letter from the Acting Director, Office of Science, dated February 19, 2014 to the FESAC Chair asking FESAC assistance in identifying disciplines in which significantly greater emphasis in workforce training at the graduate student or postdoc levels is necessary to address gaps in current and future Office of Science mission needs.

Tentative Agenda Topics:

- Approval of the Report of the Workforce Development Needs Panel (*http://science.energy.gov/~/media/fes/fesac/pdf/2014/FESAC_Charge_Feb_19_2014.pdf*)
- Other Business as Necessary
- Public Comments
- Adjourned

Public Participation: The teleconference meeting is open to the public. If you would like to file a written statement with the Committee, you may do so either before or after the meeting. If you would like to make oral statements regarding the item on the agenda, you should contact Sam Barish at the address or telephone number listed above. You must make your request for an oral statement at least five business days before the meeting. Reasonable provision will be made to include the scheduled oral statements on the agenda. The Chairperson of the Committee will conduct the meeting to facilitate the orderly conduct of business. Public comment will follow the 10-minute rule.

Minutes: The minutes of the meeting will be available for public review and copying within 45 days the Fusion Energy Sciences Advisory Committee Web site—*http://science.energy.gov/fes/fesac/*.

Issued at Washington, DC, on May 23, 2014.

LaTanya R. Butler,

Deputy Committee Management Officer.

[FR Doc. 2014–12683 Filed 5–30–14; 8:45 am]

BILLING CODE 6450–01–P

DEPARTMENT OF ENERGY

Federal Energy Regulatory Commission

[Project No. 14581–000]

Turlock Irrigation District Modesto Irrigation District; Notice of Filing of Pre-Application Document (PAD), Commencement of Pre-Filing Process, and Scoping; Request for Comments on the PAD and Scoping Document, and Identification of Issues and Associated Study Requests

a. *Type of Filing:* Notice of PAD Filing and Commencing Pre-Filing Process for Application for an Original License.

b. *Project No.:* 14581–000.

c. *Dated Filed:* March 24, 2014.[1]

d. *Submitted By:* Turlock Irrigation District and Modesto Irrigation District.

e. *Name of Project:* La Grange Hydroelectric Project.

f. *Location:* The La Grange Project facilities are located on the Tuolomne River in Tuolomne County, California. Portions of the Don Pedro Project occupy lands of the Bureau of Land Management Sierra Resource Management Unit.

g. *Filed Pursuant to:* 18 CFR Part 5 of the Commission's Regulations.

h. *Potential Applicant Contact:* Steven Boyd, Director of Water Resources, Turlock Irrigation District, P.O. Box 949, Turlock, California 95381, 209–883–8364 and Greg Dias, Project Manager, Modesto Irrigation District, P.O. Box 4060, Modesto, California 95352, 209–526–7566.

i. *FERC Contact:* Jim Hastreiter at (503) 552–2760 or *james.hastreiter@ferc.gov*.

j. Cooperating agencies: Federal, state, local, and tribal agencies with jurisdiction and/or special expertise with respect to environmental issues that wish to cooperate in the preparation of the environmental document should follow the instructions for filing such requests described in item o below. Cooperating agencies should note the Commission's policy that agencies that cooperate in the preparation of the environmental document cannot also intervene. *See* 94 FERC ¶ 61,076 (2001).

k. With this notice, we are initiating informal consultation with: (a) The U.S. Fish and Wildlife Service and/or NOAA Fisheries under section 7 of the Endangered Species Act and the joint agency regulations thereunder at 50 CFR, Part 402 and (b) the California State Historic Preservation Officer, as required by section 106, National Historical Preservation Act, and the implementing regulations of the Advisory Council on Historic Preservation at 36 CFR 800.2.

l. With this notice, we are designating the Turlock Irrigation District and Modesto Irrigation District as the Commission's non-federal representative for carrying out informal consultation, pursuant to section 7 of the Endangered Species Act and section 106 of the National Historic Preservation Act.

m. Turlock Irrigation District and Modesto Irrigation District filed with the Commission a Pre-Application Document (PAD; including a proposed process plan and schedule), pursuant to 18 CFR 5.6 of the Commission's regulations.

n. A copy of the PAD is available for review at the Commission in the Public Reference Room or may be viewed on the Commission's Web site (*http://www.ferc.gov*), using the ''eLibrary'' link. Enter the docket number, excluding the last three digits in the docket number field to access the document. For assistance, contact FERC Online Support at *FERCOnlineSupport@ferc.gov* or toll free at 1–866–208–3676, or for TTY, (202) 502–8659. A copy is also available for inspection and reproduction at the address in paragraph h.

Register online at *http://www.ferc.gov/docs-filing/esubscription.asp* to be notified via email of new filing and issuances related to this or other pending projects. For assistance, contact FERC Online Support.

o. With this notice, we are soliciting comments on the PAD and Commission's staff Scoping Document 1 (SD1), as well as study requests. All comments on the PAD and SD1, and study requests should be sent to the address above in paragraph h. In addition, all comments on the PAD and SD1, study requests, requests for cooperating agency status, and all communications to and from Commission staff related to the merits of the potential application must be filed with the Commission. Documents may be filed electronically via the Internet. See 18 CFR 385.2001(a)(1)(iii) and the instructions on the Commission's Web site *http://www.ferc.gov/docs-filing/efiling.asp*. Commenters can submit brief comments up to 6,000 characters, without prior registration, using the eComment system at *http://www.ferc.gov/docs-filing/*

[1] In a letter filed March 24, 2014, the Districts indicated that they were no longer interested in pursuing the Traditional Licensing Process. Therefore, March 24, 2014 was established as the pre-filing process start date for the Integrated Licensing Process.

ecomment.asp. You must include your name and contact information at the end of your comments. For assistance, please contact FERC Online Support. Although the Commission strongly encourages electronic filing, documents may also be paper-filed. To paper-file, mail an original and seven copies to: Kimberly D. Bose, Secretary, Federal Energy Regulatory Commission, 888 First Street NE., Washington, DC 20426.

All filings with the Commission must include on the first page, the project name (La Grange Hydroelectric Project) and number (P–14581–000), and bear the appropriate heading: ''Comments on Pre-Application Document,'' ''Study Requests,'' ''Comments on Scoping Document 1,'' ''Request for Cooperating Agency Status,'' or ''Communications to and from Commission Staff.'' Any individual or entity interested in submitting study requests, commenting on the PAD or SD1, and any agency requesting cooperating status must do so by July 22, 2014.

p. Our current intent is to prepare an Environmental Assessment (EA). This meeting will satisfy the NEPA scoping requirements.

Scoping Meetings and Environmental Site Review

Commission staff will hold two scoping meetings in the vicinity of the project at the time and place noted below. The daytime meeting will focus on resource agency, Indian tribes, and non-governmental organization concerns, while the evening meeting is primarily for receiving input from the public. We invite all interested individuals, organizations, and agencies to attend one or both of the meetings, and to assist staff in identifying particular study needs, as well as the scope of environmental issues to be addressed in the environmental document. The times and locations of these meetings are as follows:

Daytime Scoping Meeting

Date and Time: Wednesday, June 18, 2014, 10:00 a.m. (PST)

Location: CSU-Stanislaus, University Student Union-Events Center, 801 W. Monte Vista, Turlock, California 95382.

Evening Scoping Meeting

Date and Time: Wednesday, June 18, 2014, 7:00 p.m. (PST)

Location: Double Tree Hotel-Modesto, Ballroom 4, 1150 Ninth Street, Modesto, California 95354

Environmental Site Review

Date and Time: Thursday, June 19, 2014, 10:00 a.m. (PST)

Location: meet at the La Grange Rodeo Grounds, 4999 State Hwy. 132, La Grange, CA, 95329.

Please notify Jim Hastreiter at 503–552–2760 or *james.hastreiter@ferc.gov* by June 2, 2014, if you plan to attend the site visit.

Scoping Document 1 (SD1), which outlines the subject areas to be addressed in the environmental document, was mailed to the individuals and entities on the Commission's and Turlock Irrigation District and Modesto Irrigation District mailing lists. Copies of SD1 will be available at the scoping meetings, or may be viewed on the web at *http://www.ferc.gov,* using the ''eLibrary'' link. Follow the directions for accessing information in paragraph n. Based on all oral and written comments, a Scoping Document 2 (SD2) may be issued. SD2 may include a revised process plan and schedule, as well as a list of issues, identified through the scoping process.

Meeting Objectives

At the scoping meetings, staff will: (1) Initiate scoping of the issues; (2) review and discuss existing conditions and resource management objectives; (3) review and discuss existing information and identify preliminary information and study needs; (4) review and discuss the process plan and schedule for pre-filing activity that incorporates the time frames provided for in Part 5 of the Commission's regulations and, to the extent possible, maximizes coordination of federal, state, and tribal permitting and certification processes; and (5) discuss the appropriateness of any federal or state agency or Indian tribe acting as a cooperating agency for development of an environmental document.

Meeting participants should come prepared to discuss their issues and/or concerns. Please review the PAD in preparation for the scoping meetings. Directions on how to obtain a copy of the PAD and SD1 are included in item n. of this document.

Meeting Procedures

The meetings will be recorded by a stenographer and will be placed in the public record of the project.

Dated: May 23, 2014.

Kimberly D. Bose,

Secretary.

[FR Doc. 2014–12642 Filed 5–30–14; 8:45 am]

BILLING CODE 6717–01–P

DEPARTMENT OF ENERGY

Federal Energy Regulatory Commission

[Docket No. EL11–44–007]

Iberdrola Renewables, Inc., PacifiCorp, NextEra Energy Resources, LLC, Invenergy Wind North America LLC, Horizon Wind Energy LLC, v. Bonneville Power Administration; Notice of Compliance Filing

Take notice that on May 23, 2014, the Bonneville Power Administration (Bonneville) submitted a compliance filing in response to the Federal Energy Regulatory Commission's (Commission) Orders issued on December 20, 2012 [1] and February 19, 2013.[2]

Any person desiring to intervene or to protest this filing must file in accordance with Rules 211 and 214 of the Commission's Rules of Practice and Procedure (18 CFR 385.211, 385.214). Protests will be considered by the Commission in determining the appropriate action to be taken, but will not serve to make protestants parties to the proceeding. Any person wishing to become a party must file a notice of intervention or motion to intervene, as appropriate. Such notices, motions, or protests must be filed on or before the comment date. On or before the comment date, it is not necessary to serve motions to intervene or protests on persons other than the Applicant.

The Commission encourages electronic submission of protests and interventions in lieu of paper using the ''eFiling'' link at *http://www.ferc.gov.* Persons unable to file electronically should submit an original and 5 copies of the protest or intervention to the Federal Energy Regulatory Commission, 888 First Street NE., Washington, DC 20426.

This filing is accessible on-line at *http://www.ferc.gov,* using the ''eLibrary'' link and is available for review in the Commission's Public Reference Room in Washington, DC. There is an ''eSubscription'' link on the Web site that enables subscribers to receive email notification when a document is added to a subscribed docket(s). For assistance with any FERC Online service, please email *FERCOnlineSupport@ferc.gov,* or call (866) 208–3676 (toll free). For TTY, call (202) 502–8659.

Comment Date: 5:00 p.m. Eastern Time on June 13, 2014.

[1] *Iberdrola Renewables, Inc., et al.* v. *Bonneville Power Administration,* 141 FERC ¶ 61,234 (2012).

[2] *Iberdrola Renewables, Inc., et al.* v. *Bonneville Power Administration,* 142 FERC ¶ 61,116 (2013).

Dated: May 23, 2014.

Kimberly D. Bose,

Secretary.

[FR Doc. 2014–12636 Filed 5–30–14; 8:45 am]

BILLING CODE 6717–01–P

DEPARTMENT OF ENERGY

Federal Energy Regulatory Commission

[Docket No. CP14–488–000]

Northern Natural Gas Company; Notice of Request Under Blanket Authorization

Take notice that on May 14, 2014, Northern Natural Gas Company (Northern), pursuant to the blanket certificate authorization granted to Northern on September 1, 1982, in Docket No. CP82–401–000,[1] filed an application in accordance to sections 157.205, 157.208, and 157.216 of the Commission's Regulations under the Natural Gas Act (NGA) as amended, requesting authority to replace and operate approximately 5.6 miles of its existing 12-inch-diameter Marquette branch line (MIM10101) located in Marquette County, Michigan, all as more fully set forth in the application which is on file with the Commission and open to public inspection.

In order to remediate anomalies discovered during a caliper pig run, Northern proposes to replace approximately 5.6 miles of the existing MIM10101 with a 12-inch-diameter pipeline that begins at approximately MP 236.10 and ends at approximately MP 241.70 located in Marquette County, Michigan. The new replacement pipeline will primarily be installed parallel and adjacent to the existing pipeline, with the exception of approximately 4,435 feet of the pipeline which will be installed in new right-of-way. No auxiliary installations are included with the proposed project. The existing line will be cut, purged of gas, capped, and abandoned in-place. Northern will retain all easements related to the abandoned segment of pipe as well as responsibility for the abandoned pipeline. The total estimated cost of the proposed project is $17,120,470.

Any questions concerning this application may be directed to Michael T Loeffler, Senior Director, Certificates and External Affairs for Northern, 1111 South 103rd Street, Omaha, Nebraska 68124, at (402) 398–7103 or Bret Fritch, Senior Regulatory Analyst, at (402) 398–7140.

[1] 20 FERC ¶ 62,410 (1982).

This filing is available for review at the Commission or may be viewed on the Commission's Web site at *http://www.ferc.gov,* using the ''eLibrary'' link. Enter the docket number excluding the last three digits in the docket number filed to access the document. For assistance, please contact FERC Online Support at FERC *OnlineSupport@ferc.gov* or call toll-free at (866) 206–3676, or, for TTY, contact (202) 502–8659. Comments, protests and interventions may be filed electronically via the Internet in lieu of paper. See, 18 CFR 385.2001(a)(1)(iii) and the instructions on the Commission's Web site under the ''e-Filing'' link. The Commission strongly encourages intervenors to file electronically.

Pursuant to section 157.9 of the Commission's rules, 18 CFR 157.9, within 90 days of this Notice, the Commission staff will either: Complete its environmental assessment (EA) and place it into the Commission's public record (eLibrary) for this proceeding; or issue a Notice of Schedule for Environmental Review. If a Notice of Schedule for Environmental Review is issued, it will indicate, among other milestones, the anticipated date for the Commission staff's issuance of the final environmental impact statement (FEIS) or EA for this proposal. The filing of the EA in the Commission's public record for this proceeding or the issuance of a Notice of Schedule for Environmental Review will serve to notify federal and state agencies of the timing for the completion of all necessary reviews, and the subsequent need to complete all federal authorizations within 90 days of the date of issuance of the Commission staff's FEIS or EA.

Any person or the Commission's staff may, within 60 days after issuance of the instant notice by the Commission, file pursuant to Rule 214 of the Commission's Procedural Rules (18 CFR 385.214) a motion to intervene or notice of intervention and pursuant to section 157.205 of the regulations under the NGA (18 CFR 157.205), a protest to the request. If no protest is filed within the time allowed therefore, the proposed activity shall be deemed to be authorized effective the day after the time allowed for filing a protest. If a protest is filed and not withdrawn within 30 days after the allowed time for filing a protest, the instant request shall be treated as an application for authorization pursuant to section 7 of the NGA.

Dated: May 23, 2014.

Kimberly D. Bose,

Secretary.

[FR Doc. 2014–12640 Filed 5–30–14; 8:45 am]

BILLING CODE 6717–01–P

DEPARTMENT OF ENERGY

Federal Energy Regulatory Commission

[Docket No. ER14–2013–000]

Rjumr Energy Partners Corp.; Supplemental Notice that Initial Market-Based Rate Filing Includes Request for Blanket Section 204 Authorization

This is a supplemental notice in the above-referenced proceeding of RJUMR ENERGY PARTNERS CORP.'s application for market-based rate authority, with an accompanying rate tariff, noting that such application includes a request for blanket authorization, under 18 CFR Part 34, of future issuances of securities and assumptions of liability.

Any person desiring to intervene or to protest should file with the Federal Energy Regulatory Commission, 888 First Street NE., Washington, DC 20426, in accordance with Rules 211 and 214 of the Commission's Rules of Practice and Procedure (18 CFR 385.211 and 385.214). Anyone filing a motion to intervene or protest must serve a copy of that document on the Applicant.

Notice is hereby given that the deadline for filing protests with regard to the applicant's request for blanket authorization, under 18 CFR part 34, of future issuances of securities and assumptions of liability, is June 12, 2014.

The Commission encourages electronic submission of protests and interventions in lieu of paper, using the FERC Online links at *http://www.ferc.gov*. To facilitate electronic service, persons with Internet access who will eFile a document and/or be listed as a contact for an intervenor must create and validate an eRegistration account using the eRegistration link. Select the eFiling link to log on and submit the intervention or protests.

Persons unable to file electronically should submit an original and 5 copies of the intervention or protest to the Federal Energy Regulatory Commission, 888 First Street NE., Washington, DC 20426.

The filings in the above-referenced proceeding are accessible in the Commission's eLibrary system by clicking on the appropriate link in the

above list. They are also available for review in the Commission's Public Reference Room in Washington, DC. There is an eSubscription link on the Web site that enables subscribers to receive email notification when a document is added to a subscribed docket(s). For assistance with any FERC Online service, please email *FERCOnlineSupport@ferc.gov*. or call (866) 208–3676 (toll free). For TTY, call (202) 502–8659.

Dated: May 23, 2014.

Kimberly D. Bose,

Secretary.

[FR Doc. 2014–12638 Filed 5–30–14; 8:45 am]

BILLING CODE 6717–01–P

DEPARTMENT OF ENERGY

Federal Energy Regulatory Commission

[Docket No. AD10–12–005]

Increasing Market and Planning Efficiency through Improved Software; Supplemental Agenda Notice

Take notice that the Commission staff will convene a technical conference on June 23, 24, and 25, 2014 to discuss opportunities for increasing real-time and day-ahead market efficiency through improved software.

This conference will bring together diverse experts from public utilities, the software industry, government, research centers and academia and is intended to build on the discussions initiated in the previous Commission staff technical conferences on increasing market and planning efficiency through improved software.

The agenda for this conference is attached. If any changes occur, the revised agenda will be posted on the calendar page for this event on the Commission's Web site [1] prior to the event.

Dated: May 23, 2014.

Kimberly D. Bose,

Secretary.

Monday, June 23, 2014

8:30 AM	Introduction (3M–2). Richard O'Neill, Federal Energy Regulatory Commission (*Washington, District of Columbia*).
9:00 AM	Session M1 (Meeting Room 3M–2). Overcoming Computational Challenges on Large Scale Security Constrained Unit Commitment Problems—MISO and ALSTOM's Experience with MIP Solver. Yonghong Chen, MISO (*Carmel, Indiana*). Xing Wang, Qianfan Wang, Alstom Grid (*Redmond, Washington*). Experiences of Operation Efficiency Evaluation and Improvement at PJM. Hong Chen, PJM Interconnection (*Audubon, Pennsylvania*). Day-Ahead and Short-Term Unit Commitment OPF with Voltage Stability Constraints. Khaled Abdul-Rahman, Enamul Haq, Jun Wu, California ISO (*Folsom, California*). Hsiao-Dong Chiang, Bigwood Systems, Inc. (*Ithaca, New York*). Reserve Requirement Calculator in SPP Integrated Marketplace. Jie Wan, Alstom Grid (*Redmond, Washington*). Casey Cathey, Southwest Power Pool (*Little Rock, Arkansas*).
11:00 AM	Break.
11:15 AM	Session M2 (Meeting Room 3M–2). Optimizing Wind Generation in ERCOT Nodal Market. Resmi Surendran, Hailong Hui, ERCOT (*Taylor, Texas*). Chien-Ning Yu, ABB/Ventyx (*Santa Clara, California*). Wind Dispatch Using Do-Not-Exceed Limit. Tongxin Zheng, Eugene Litvinov, Jinye Zhao, ISO New England (*Holyoke, Massachusetts*).
12:15 PM	Lunch.
1:30 PM	Session M3 (Meeting Room 3M–2). Estimation of the Secure Range for Dynamic Interchange Adjustment. Slava Maslennikov, ISO New England (*Holyoke, Massachusetts*). Yuri Makarov, Pavel Etignov, PNNL (*Richland, Washington*). Topology Control Algorithms Simulations in PJM with AC Modeling. Pablo Ruiz, Xiao Li, Bruce Tsuchida, The Brattle Group (*Cambridge, Massachusetts*). Michael C. Caramanis, Evgeniy Goldis, Boston University (*Boston, Massachusetts*). C. Russ Philbrick, Polaris Systems Optimization (*Shoreline, Washington*). Aleksandr Rudkevich, Newton Energy Group (*Newton, Massachusetts*). Richard D. Tabors, Across The Charles (*Cambridge, Massachusetts*). On the Use of Operating Parameters in Defining Marginal Cost and Minimizing Uplift. Paul Sotkiewicz, PJM Interconnection, LLC (*Audubon, Pennsylvania*).
3:00 PM	Break.
3:30 PM	Session M4 (Meeting Room 3M–2). Operational and Practical Considerations for Stochastic Unit Commitment Solutions. Nivad Navid, Todd Ramey, Dhiman Chatterjee, MISO (*Carmel, Indiana*). Performance-based Regulation Compensation Improve PJM Market Efficiency. Ying Xiao, Alstom Grid (*Redmond, Washington*). Paul Sotkiewicz, PJM Interconnection, LLC (*Audubon, Pennsylvania*). Performance-Based Pricing of Frequency Regulation in Electricity Markets.

[1] *http://www.ferc.gov/industries/electric/indus-act/market-planning/2014-conference.asp.*

	Alex Papalexopoulos, Panagiotis Andrianesis, ECCO International (*San Francisco, California*).
5:00 PM	Adjourn.
	Tuesday, June 24, 2014
8:15 AM	Arrive and welcome (3M–2)
8:30 AM	Session T1–A (Meeting Room 3M–2) On Deployment Barriers and Research Challenges for Stochastic Unit Commitment. Jean-Paul Watson, Sandia National Laboratories (*Albuquerque, New Mexico*). A Comparison of Various Unit Commitment Techniques Dealing with Uncertainty. Daniel Kirschen, Yury Dvorkin, Yishen Wang, Ting Qiu, Hrvoje Pandzic, University of Washington (*Seattle, Washington*). An Improved Stochastic Unit Commitment Formulation to Accommodate Wind Uncertainty. Canan Uckun, Audun Botterud, Argonne National Laboratory (*Lemont, Illinois*). John R. Birge, University of Chicago (*Chicago, Illinois*). Economic Impacts of Wind Covariance Estimation on Power Grid Operations. Cosmin Petra, Mihai Anitescu, Victor Zavala, Argonne National Laboratory (*Argonne, Illinois*).
	Session T1–B (Meeting Room 3M–4). Full AC Network Integrated Core Solver for the SuperOPF Framework. Hsiao-Dong Chiang, Bin Wang, Patrick Causgrove, Bigwood Systems, Inc. (*Ithaca, New York*). Graph-Theoretic Algorithm for Arbitrary Polynomial Optimization Problems. Javad Lavaei, Ramtin Madani, Ghazal Fazelnia, Abdulrahman Kalbat, Columbia University (*New York, New York*). Somayeh Sojoudi, New York University (*New York, New York*). Moment-Based Relaxations of Optimal Power Flow Problems. Daniel Molzahn, Ian Hiskens, University of Michigan (*Ann Arbor, Michigan*). Local Optima and Bounds in Optimal Power Flow Problems. Kenneth McKinnon, Edinburgh University (*Edinburgh, United Kingdom*). Waqquas Bukhsh, Technical University of Denmark (*Copenhagen, Denmark*).
10:30 AM	Break.
10:45 AM	Session T2–A (Meeting Room 3M–2). Robust Reserve Modeling for Wind Power Integration in Ramp-Based Unit Commitment. German Morales-Espana, Royal Institute of Technology (KTH) (*Madrid, Spain*). Ross Baldick, University of Texas (*Austin, Texas*). Javier Garcia-Gonzalez, Andres Ramos, Universidad Pontificia Comillas (*Madrid, Spain*). Concepts and Practice Using Stochastic Programs for Determining Reserve Requirements. Robert Entriken, Eamonn Lannoye, Aidan Tuohy, EPRI (*Palo Alto, California*). Garret LaBove, Russ Philbrick, PSO. Edward Lo, CAISO. Larsen Plano, PG&E. SCUC and SCD Software for Fully Coordinated Regional Power Markets. Assef Zobian, Cambridge Energy Solutions (*Cambridge, Massachusetts*). Kurt Glaesemann, Northwest National Laboratory (*Richland, Washington*).
	Session T2–B (Meeting Room 3M–4). Establishing a Consistent State of the European Electricity Transmission Network by Merging. Non-synchronised Data from Several Countries with an AC Optimal Power Flow. Maxime Fender, Artelys (*Montreal, Canada).* Mireille Chevallier, Rte (*Versailles, France*). Sylvain Mouret, Pierre Girardeau, Manuel Ruiz, Artelys (*Paris, France*). Operating Beyond PV Curve Limits. Marija Ilic, Jeffrey Lang, NETSS, Inc (*Sudbury, Massachusetts*). Sanja Cvijic. Stochastic Optimal Power Flow with Uncertain Reserves from Flexible Loads. Johanna Mathieu, Siqian Chen, University of Michigan (*Ann Arbor, Michigan*). Maria Vrakopoulou, Goran Andersson, ETH Zurich (*Zurich, Switzerland*).
12:15 PM	Lunch
1:30 PM	Session T3–A (Meeting Room 3M–2). A Stochastic Electricity Market Clearing Formulation with Consistent Pricing Properties. Victor Zavala, Mihai Anitescu, Argonne National Laboratory (*Argonne, Illinois*). Stochastic Modeling at Multiple Timescales. Hongyu Wu, Erik Ela, NREL (*Golden, Colorado*). Multistage Robust Unit Commitment with Affine Policies and Efficient Algorithms. Sun Xu, Alvaro Lorca, Georgia Institute of Technology (*Atlanta, Georgia*). Tongxin Zheng, Eugene Litvinov, ISO New England (*Holyoke, Massachusetts*)
	Session T3–B (Meeting Room 3M–4). Model-Predictive Cascade Mitigation in Electric Power Systems With Storage and Renewables. Mads Almassalkhi, Ian Hiskens, University of Michigan (*Ann Arbor, Michigan*). Multi-time-step Chance Constrained Generation Re-dispatch. Daniel Bienstock, Columbia University (*New York, New York*). Michael Chertkov, Scot Backhaus, Russell Bent, Los Alamos National Laboratory (*Los Alamos, New Mexico*). Quantifying the Trade-off Between Secure and Economic Operation of Power Systems Under Uncertainty.

	Maria Vrakopoulou, John Lygeros, Goeran Andersson, ETH Zurich (*Zurich, Switzerland*). Kostas Margellos, UC Berkeley (*Berkeley, California*).
3:00 PM	Break.
3:30 PM	Session T4–A (Meeting Room 3M–2). Scenario Reduction for Scalable Stochastic Unit Commitment. Sarah Ryan, Yonghan Feng, Iowa State University (*Ames, Iowa*). Cesar Silva-Monroy, Jean-Paul Watson, Sandia National Laboratories (*Albuquerque, New Mexico*). David L. Woodruff, University of California Davis (*Davis, California*). Stochastic Models for Generation Unit Commitment. Tim Schulze, The School of Mathematics (*Edinburgh, United Kingdom*). Kenneth I.M. McKinnon, The University of Edinburgh (*Edinburgh, United Kingdom*). A Scalable Decomposition Algorithm for Solving Stochastic Transmission and Generation Investment Planning Problems. Francisco Munoz, Jean-Paul, Sandia National Laboratories (*Albuquerque, New Mexico*)
	Session T4–B (Meeting Room 3M–4). Computational Performance of the Current-Voltage (IV) Linearization of the ACOPF: Before Extensions. Anya Castillo, Johns Hopkins University (*Baltimore, Maryland*). Transmission Switching with the Current-Voltage (IV) Linearization of the ACOPF. Paula Lipka, University of California, Berkeley (*Berkeley, California*). Evaluating High Penetrations of Off-Shore Wind using SMART–ISO. Warren B. Powell, Hugo P. Simao, Princeton University (*Princeton, New Jersey*). Computational Study of Security Constrained Economic Dispatch with Multi-period Rescheduling. Michael Ferris, Yanchao Liu, Feng Zhao, University of Wisconsin (*Madison, Wisconsin*).
6:00 PM	Adjourn.
	Wednesday, June 25, 2014
8:45 AM	Arrive and welcome (3M–2)
9:00 AM	Session W1–A (Meeting Room 3M–2) Distributionally Robust Congestion Management with Dynamic Line Ratings. Feng Qiu, Jianhui Wang, Argonne National Laboratory (*Argonne, Illinois*). Real Time Dynamic Path Limit Computation for Market Efficiency and Grid Reliability. Nilanjan Ray Chaudhuri, Naresh Acharya, Chaitanya Baone, Santosh Veda, GE Global Research (*Niskayuna, New York*). Implementation Of Dynamic Thermal Ratings in the Operational Environment. Kwok Cheung, Alstom Grid (*Redmond, Washington*). Hongxia Wu. Identifying, Modeling and Utilizing The Hidden Capacity in the Transmission Network. Richard Tabors, Tabors Caramanis Rudkevich (*Cambridge, Massachusetts*). Adam Rousselle, Utility Risk Management Corporation (*New Hope, Pennsylvania*). Aleksandr Rudkevich, Newton Energy Group (*Newton, Massachusetts*). Michael Seelhof, Tabors Caramanis Rudkevich (*New York, New York*)
	Session W1–B (Meeting Room 3M–4). Stochastic Operations Toolkit for Power Systems with High Penetration of Solar Energy. Cesar Silva-Monroy, Jean-Paul Watson, Francisco Munoz, Sandia National Laboratories (*Albuquerque, New Mexico*). Richard Chen, Ali Pinar, Sandia National Laboratories (*Livermore, California*). Andrew Mills, Lawrence Berkeley National Laboratory (*Berkeley, California*). Use of Cloud Computing in Power Market Simulations. Aleksandr Rudkevich, John Goldis, Newton Energy Group (*Cambridge, Massachusetts*). Richard Tabors, Lorna Omondi, Tabors Caramanis Rudkevich (*Cambridge, Massachusetts*) Incorporating Intra-hour Market Pricing. Gary Dorris, Ascend Analytics, LLC (*Boulder, Colorado*). Facilitating Appropriate Compensation of Electric Energy and Reserve Through Standardized Contracts. Leigh Tesfatsion, Deung-Yong Heo, Iowa State University (*Ames, Iowa*).
11:00 AM	Break.
11:15 AM	Session W2–A (Meeting Room 3M–2). Concentric Relaxations and Transmission Switching. Jim Ostrowski, Mike Hare, University of Tennessee (*Knoxville, Tennessee*). Jianhui Wang, Argonne National Laboratory (*Argonne, Illinois*). Probabilistic Security Analysis of Optimal Transmission Switching. Daniel Kirschen, Pierre Henneaux, University of Washington (*Seattle, Washington*).
	Session W2–B (Meeting Room 3M–4). Experience Solving the RTO Unit Commitment Test System. Stephen Elbert, Pacific Northwest National Laboratory (*Richland, Washington*). Stochastic Look-ahead Dispatch with Intermittent Renewable Generation via Progressive Hedging and L-shaped Method. Yingzhong (Gary) Gu, Le Xie, Texas A&M University (*College Station, Texas*)
12:15 PM	Adjourn.

[FR Doc. 2014–12635 Filed 5–30–14; 8:45 am]

BILLING CODE 6717–01–P

DEPARTMENT OF ENERGY

Federal Energy Regulatory Commission

[Docket No. CP14–491–000]

KKR NR I Mineral Holdings II L.P.; KKR NR I–A Mineral Holdings II L.P.; KFN NR Mineral Holdings II L.P.; Premier Natural Resources II, LLC; Notice of Petition for Declaratory Order

Take notice that on May 21, 2014, KKR NR I Mineral Holdings II L.P., KKR NR I–A Mineral Holdings II L.P., KFN NR Mineral Holdings II L.P., and Premier Natural Resources II, LLC (collectively, the ''Petitioners''), pursuant to Rule 207(a)(2) of the Federal Energy Regulatory Commission's (''Commission'') Rules of Practice and Procedure, 18 CFR 385.207(a)(2) (2013), filed A Petition for Declaratory Order finding that the Index 301 Pipeline, as operated by the Petitioners, is gathering and not subject to the Commission's jurisdiction under Section 1(b) of the Natural Gas Act, 15 U.S.C. 717(b).

Any person desiring to intervene or to protest this filing must file in accordance with Rules 211 and 214 of the Commission's Rules of Practice and Procedure (18 CFR 385.211, 385.214). Protests will be considered by the Commission in determining the appropriate action to be taken, but will not serve to make protestants parties to the proceeding. Any person wishing to become a party must file a notice of intervention or motion to intervene, as appropriate. Such notices, motions, or protests must be filed on or before the comment date. On or before the comment date, it is not necessary to serve motions to intervene or protests on persons other than the Applicant.

The Commission encourages electronic submission of protests and interventions in lieu of paper using the ''eFiling'' link at *http://www.ferc.gov.* Persons unable to file electronically should submit an original and 5 copies of the protest or intervention to the Federal Energy Regulatory Commission, 888 First Street NE., Washington, DC 20426.

This filing is accessible on-line at *http://www.ferc.gov,* using the ''eLibrary'' link and is available for review in the Commission's Public Reference Room in Washington, DC. There is an ''eSubscription'' link on the Web site that enables subscribers to receive email notification when a document is added to a subscribed docket(s).

For assistance with any FERC Online service, please email *FERCOnlineSupport@ferc.gov*, or call (866) 208–3676 (toll free). For TTY, call (202) 502–8659.

Comment Date: 5:00 p.m. Eastern Time on June 20, 2014.

Dated: May 23, 2014.

Kimberly D. Bose,

Secretary.

[FR Doc. 2014–12641 Filed 5–30–14; 8:45 am]

BILLING CODE 6717–01–P

DEPARTMENT OF ENERGY

Federal Energy Regulatory Commission

[Docket No. EL14–54–000]

Great River Energy; Notice of Petition for Partial Waiver

Take notice that on May 16, 2014, pursuant to section 292.402 of the Federal Energy Regulatory Commission's (Commission) regulations, 18 CFR 292.402, Great River Energy (Great River), on behalf of itself and its twenty ''all-requirements'' electric distribution cooperative member-owners (collectively, Participating Members) [1] filed a petition for a partial waiver of certain obligations imposed on Great River and the Participating Members under sections 292.303(a) and 292.303(b) of the Commission's Regulations [2] implementing section 210 of the Public Utility Regulatory Policies Act of 1978, as amended.[3]

Any person desiring to intervene or to protest this filing must file in accordance with Rules 211 and 214 of the Commission's Rules of Practice and Procedure (18 CFR 385.211, 385.214). Protests will be considered by the Commission in determining the appropriate action to be taken, but will not serve to make protestants parties to the proceeding. Any person wishing to become a party must file a notice of intervention or motion to intervene, as appropriate. Such notices, motions, or protests must be filed on or before the comment date. On or before the comment date, it is not necessary to serve motions to intervene or protests on persons other than the Applicant.

The Commission encourages electronic submission of protests and interventions in lieu of paper using the ''eFiling'' link at *http://www.ferc.gov.* Persons unable to file electronically should submit an original and 5 copies of the protest or intervention to the Federal Energy Regulatory Commission, 888 First Street NE., Washington, DC 20426.

This filing is accessible on-line at *http://www.ferc.gov,* using the ''eLibrary'' link and is available for review in the Commission's Public Reference Room in Washington, DC. There is an ''eSubscription'' link on the Web site that enables subscribers to receive email notification when a document is added to a subscribed docket(s). For assistance with any FERC Online service, please email *FERCOnlineSupport@ferc.gov,* or call (866) 208–3676 (toll free). For TTY, call (202) 502–8659.

Comment Date: 5:00 p.m. Eastern Time on June 6, 2014.

Dated: May 23, 2014.

Kimberly D. Bose,

Secretary.

[FR Doc. 2014–12637 Filed 5–30–14; 8:45 am]

BILLING CODE 6717–01–P

[1] The Participating Members joining in this petition include all of Great River's ''all-requirements'' members which members purchase substantially all of their electric requirements from Great River, including: Arrowhead Cooperative; BENCO Electric Cooperative; Brown County Rural Electrical Association, Connexus Energy; Cooperative Light & Power; Dakota Electric Association; East Central Energy; Goodhue County Cooperative Electric Association; Itasca-Mantrap Cooperative Electrical Association; Kandiyohi Power Cooperative; Lake Country Power; Lake Region Electric Cooperative; McLeod Cooperative Power Association; Mille Lacs Energy Cooperative; Nobles Cooperative Electric; North Itasca Electric Cooperative; Runestone Electric Association; Stearns Electric Association; Steele-Waseca Cooperative Electric; and Todd-Wadena Electric Cooperative. Great River has eight other members who are not ''all-requirements'' members of Great River and who are not Participating Members for the purpose of this petition.

[2] 18 CFR 292.303(a) and (b).

[3] 16 U.S.C. 824a–3.

DEPARTMENT OF ENERGY

Federal Energy Regulatory Commission

Notice of Commission Staff Attendance

The Federal Energy Regulatory Commission (Commission) hereby gives notice that members of the Commission's staff will attend the following meeting related to the Midcontinent Independent System Operator, Inc. (MISO)—PJM Interconnection, L.L.C. (PJM) Joint and Common Market Initiative (Docket No. AD14–3–000):

MISO/PJM Joint Stakeholder Meeting—May 28, 2014.

The above-referenced meeting will be held at: PJM Training Center, 2750

Monroe Boulevard, Audubon, PA 19403.

The above-referenced meeting is open to the public.

Further information may be found at *www.pjm.com*.

The discussions at the meeting described above may address matters at issue in the following proceedings:

Docket No. EL13–47, FirstEnergy Solutions Corp. and Allegheny Energy Supply Company, LLC v. PJM Interconnection, L.L.C.
Docket No. ER14–503, PJM Interconnection, L.L.C.
Docket No. EL13–88, Northern Indiana Public Service Company v. Midcontinent Independent System Operator, Inc. and PJM Interconnection, L.L.C.
Docket No. ER13–2233, Midcontinent Independent System Operator, Inc.
Docket No. ER14–381, PJM Interconnection, L.L.C.
Docket No. EL11–34, Midcontinent Independent System Operator, Inc.
Docket No. EL14–21, Southwest Power Pool, Inc. v. Midcontinent Independent System Operator, Inc.
Docket No. EL14–30, Midcontinent Independent System Operator, Inc. v. Southwest Power Pool, Inc.
Docket No. ER11–1844, Midwest Independent Transmission System Operator, Inc.
Docket No. ER13–1864, Southwest Power Pool, Inc.
Docket Nos. ER13–1923, ER13–1938, ER13–1943, ER13–1945, Midcontinent Independent System Operator, Inc.
Docket Nos. ER13–1924, ER13–1926, ER13–1927, ER13–1936, ER13–1944, ER13–1947, PJM Interconnection, L.L.C.
Docket Nos. ER13–1937, ER13–1939, Southwest Power Pool, Inc.
Docket No. ER14–1174, Southwest Power Pool, Inc.
Docket No. ER14–1713, Midcontinent Independent System Operator, Inc.
Docket No. ER14–1736, Midcontinent Independent System Operator, Inc.
Docket No. ER14–1405, PJM Interconnection, L.L.C.
Docket No. ER14–1406, Midcontinent Independent System Operator, Inc.
Docket No. ER14–1407, Southwest Power Pool, Inc.

For more information, contact Mary Cain, Office of Energy Policy and Innovation, Federal Energy Regulatory Commission at (202) 502–6337 or *mary.cain@ferc.gov*.

Dated: May 23, 2014.

Kimberly D. Bose,

Secretary.

[FR Doc. 2014–12639 Filed 5–30–14; 8:45 am]

BILLING CODE 6717–01–P

ENVIRONMENTAL PROTECTION AGENCY

[FRL 9911–71–OGC]

Proposed Consent Decree, Clean Air Act Citizen Suit

AGENCY: Environmental Protection Agency (EPA).

ACTION: Notice of Proposed Consent Decree; Request for Public Comment.

SUMMARY: In accordance with section 113(g) of the Clean Air Act, as amended (''CAA'' or the ''Act''), notice is hereby given of a proposed consent decree to address a lawsuit filed by the Sierra Club and the Natural Resources Defense Council in the United States District Court for the Northern District of California, in which several states have intervened as plaintiff-interveners: *Sierra Club et al.* v. *McCarthy,* Civil Action No. 3:13–cv–3953–SI (N.D. Cal.). On August 26, 2013, Plaintiffs filed a complaint alleging that Gina McCarthy, in her official capacity as Administrator of the United States Environmental Protection Agency (''EPA''), failed to take timely nondiscretionary action to promulgate and publish the remaining area designations for the 2010 revised primary national ambient air quality standard (''NAAQS'') for sulfur dioxide (''SO_2''). The proposed consent decree would establish deadlines for EPA to take such action.

DATES: Written comments on the proposed consent decree must be received by *July 2, 2014.*

ADDRESSES: Submit your comments, identified by Docket ID number EPA–HQ–OGC–2014–0421 online at *www.regulations.gov* (EPA's preferred method); by email to *oei.docket@epa.gov;* by mail to EPA Docket Center, Environmental Protection Agency, Mailcode: 2822T, 1200 Pennsylvania Ave. NW., Washington, DC 20460–0001; or by hand delivery or courier to EPA Docket Center, EPA West, Room 3334, 1301 Constitution Ave. NW., Washington, DC, between 8:30 a.m. and 4:30 p.m. Monday through Friday, excluding legal holidays. Comments on a disk or CD–ROM should be formatted in Word or ASCII file, avoiding the use of special characters and any form of encryption, and may be mailed to the mailing address above.

FOR FURTHER INFORMATION CONTACT: Mike Thrift, Air and Radiation Law Office (2344A), Office of General Counsel, U.S. Environmental Protection Agency, 1200 Pennsylvania Ave. NW., Washington, DC 20460; telephone: (202) 564–5596; fax number: (202) 564–5603; email address: *thrift.mike@epa.gov.*

SUPPLEMENTARY INFORMATION:

I. Additional Information About the Proposed Consent Decree

The proposed consent decree would address a lawsuit filed by the Sierra Club and the Natural Resources Defense Council (''Plaintiffs'') seeking to compel the Administrator to take action to promulgate and publish remaining area designations for the 2010 primary SO_2 NAAQS under CAA sections 107(d)(1)(B) and 107(d)(2)(A), 42 U.S.C. 7407(d)(1)(B), 7407(d)(2)(A). Under the terms of the proposed consent decree, to which Plaintiffs and EPA are parties (the Plaintiff-Intervener states have not joined this consent decree), EPA would be required to complete area designations for the 2010 SO_2 NAAQS in three stages. First, on or before the date 16 months from the date of the consent decree, EPA will sign for publication in the **Federal Register** a notice of promulgation of such designations for remaining undesignated areas which: (a) Based on air quality monitoring in the three full calendar years preceding such deadline have monitored violations of the 2010 SO_2 NAAQS; or (b) contain any stationary source that has not been ''announced for retirement'' and that, according to the data in EPA's Air Markets Database, either (1) emitted more than 16,000 tons of SO_2 in 2012, or (2) emitted more than 2,600 tons of SO_2 and had an annual average emission rate of 0.45 lbs SO_2/Mmbtu or higher in 2012; where (c) ''announced for retirement'' means any stationary source in the United States with a coal-fired unit that as of January 1, 2010, had a capacity of over five megawatts and that has announced that it will cease burning coal at that unit through a company public announcement, public utilities commission filing, consent decree, public legal settlement, final state or federal permit filing, or similar means of communication. Second, on or before December 31, 2017, EPA will sign a notice of promulgation of such designations for remaining undesignated areas in which, by January 1, 2017, states have not installed and begun operating a new SO_2 monitoring network meeting EPA specifications referenced in EPA's anticipated ''Data Requirements Rule'' rulemaking (proposed at 79 FR 27449 (May 13, 2014)) directing states to collect and analyze additional information regarding SO_2 emissions concentrations. Third, on or before December 31, 2020, EPA will sign a notice of promulgation of such designations for all remaining undesignated areas. In addition, the proposed consent decree arranges for

payment to the Plaintiffs for the costs of litigation, including attorney fees.

For a period of thirty (30) days following the date of publication of this notice, the Agency will accept written comments relating to the proposed consent decree from persons who are not named as parties or interveners to the litigation in question. EPA or the Department of Justice may withdraw or withhold consent to the proposed consent decree if the comments disclose facts or considerations that indicate that such consent is inappropriate, improper, inadequate, or inconsistent with the requirements of the Act. Unless EPA or the Department of Justice determines that consent to this consent decree should be withdrawn, the terms of the consent decree will be affirmed.

II. Additional Information About Commenting on the Proposed Consent Decree

A. How can I get a copy of the Consent Decree?

The official public docket for this action (identified by Docket ID No. EPA–HQ–OGC–2014–0421 contains a copy of the proposed consent decree. The official public docket is available for public viewing at the Office of Environmental Information (OEI) Docket in the EPA Docket Center, EPA West, Room 3334, 1301 Constitution Ave. NW., Washington, DC. The EPA Docket Center Public Reading Room is open from 8:30 a.m. to 4:30 p.m., Monday through Friday, excluding legal holidays. The telephone number for the Public Reading Room is (202) 566–1744, and the telephone number for the OEI Docket is (202) 566–1752.

An electronic version of the public docket is available through *www.regulations.gov.* You may use *www.regulations.gov* to submit or view public comments, access the index listing of the contents of the official public docket, and access those documents in the public docket that are available electronically. Once in the system, key in the appropriate docket identification number then select ''search''.

It is important to note that EPA's policy is that public comments, whether submitted electronically or in paper, will be made available for public viewing online at *www.regulations.gov* without change, unless the comment contains copyrighted material, CBI, or other information whose disclosure is restricted by statute. Information claimed as CBI and other information whose disclosure is restricted by statute is not included in the official public docket or in the electronic public docket. EPA's policy is that copyrighted material, including copyrighted material contained in a public comment, will not be placed in EPA's electronic public docket but will be available only in printed, paper form in the official public docket. Although not all docket materials may be available electronically, you may still access any of the publicly available docket materials through the EPA Docket Center.

B. How and to whom do I submit comments?

You may submit comments as provided in the **ADDRESSES** section. Please ensure that your comments are submitted within the specified comment period. Comments received after the close of the comment period will be marked ''late.'' EPA is not required to consider these late comments.

If you submit an electronic comment, EPA recommends that you include your name, mailing address, and an email address or other contact information in the body of your comment and with any disk or CD ROM you submit. This ensures that you can be identified as the submitter of the comment and allows EPA to contact you in case EPA cannot read your comment due to technical difficulties or needs further information on the substance of your comment. Any identifying or contact information provided in the body of a comment will be included as part of the comment that is placed in the official public docket, and made available in EPA's electronic public docket. If EPA cannot read your comment due to technical difficulties and cannot contact you for clarification, EPA may not be able to consider your comment.

Use of the *www.regulations.gov* Web site to submit comments to EPA electronically is EPA's preferred method for receiving comments. The electronic public docket system is an ''anonymous access'' system, which means EPA will not know your identity, email address, or other contact information unless you provide it in the body of your comment. In contrast to EPA's electronic public docket, EPA's electronic mail (email) system is not an ''anonymous access'' system. If you send an email comment directly to the Docket without going through *www.regulations.gov,* your email address is automatically captured and included as part of the comment that is placed in the official public docket, and made available in EPA's electronic public docket.

Dated: May 23, 2014.

Lorie J. Schmidt,

Associate General Counsel.

[FR Doc. 2014–12693 Filed 5–30–14; 8:45 am]

BILLING CODE 6560–50–P

EXPORT-IMPORT BANK OF THE UNITED STATES

[Public Notice: 2014–3004]

Agency Information Collection Activities; Proposals, Submissions, and Approvals

AGENCY: Export-Import Bank of the United States.

ACTION: Submission for OMB review and comments request.

Form Title: EIB 92–27 Report of Overdue Accounts Under Short-Term Policies.

SUMMARY: The Export-Import Bank of the United States (Ex-Im Bank), as a part of its continuing effort to reduce paperwork and respondent burden, invites the general public and other Federal Agencies to comment on the proposed information collection, as required by the Paperwork Reduction Act of 1995. The collection provides Ex-Im Bank staff with the information necessary to monitor the borrower's payments for exported goods covered under its short and medium-term export credit insurance policies. It also alerts Ex-Im Bank staff of defaults, so they can manage the portfolio in an informed manner.

Form can be viewed at *http://www.exim.gov/pub/pending/eib92-27.pdf.*

DATES: Comments must be received on or before July 2, 2014 to be assured of consideration.

ADDRESSES: Comments may be submitted electronically on *WWW.REGULATIONS.GOV* (EIB 92–27) or by mail to Office of Information and Regulatory Affairs, 725 17th Street NW., Washington, DC 20038 Attn: OMB 3048–0027.

SUPPLEMENTARY INFORMATION:

Title and Form Number: EIB 92–27 Report of Overdue Accounts Under Short-Term Policies.

OMB Number: 3048–0027.

Type of Review: Regular.

Need and Use: The collection provides Ex-Im Bank staff with the information necessary to monitor the borrower's payments for exported goods covered under its short- and medium-term export credit insurance policies. It also alerts Ex-Im Bank staff of defaults, so they can manage the portfolio in an informed manner.

Affected Public: This form affects entities involved in the export of U.S. goods and services.

Annual Number of Respondents: 745.

Estimated Time per Respondent: 15 minutes.

Annual Burden Hours for Respondents: 186.25 hours.

Frequency of Reporting or Use: Monthly, until completed.

Government Reviewing Time per Year: 186.25 hours.

Average Wages per Hour: $42.50.

Average Cost per Year: $7,915.63.

Benefits and Overhead: 20%.

Total Government Cost: $9,498.75.

Bonita Jones-McNeil,

Records Management Division, Office of the Chief Information Officer.

[FR Doc. 2014–12616 Filed 5–30–14; 8:45 am]

BILLING CODE 6690–01–P

FEDERAL COMMUNICATIONS COMMISSION

[AU Docket No. 14–78; DA 14–669]

Auction of Advanced Wireless Services Licenses Scheduled for November 13, 2014; Comment Sought on Competitive Bidding Procedures for Auction 97

AGENCY: Federal Communications Commission.

ACTION: Notice.

SUMMARY: This document announces the auction of Advanced Wireless Services licenses in the 1695–1710 MHz, 1755–1780 MHz, and 2155–2180 MHz (AWS–3) bands scheduled to commence November 13, 2014. This document also seeks comment on competitive bidding procedures for Auction 97.

DATES: Comments are due on or before June 9, 2014, and reply comments are due on or before June 23, 2014. Bidding for licenses in Auction 97 is scheduled to begin on November 13, 2014.

ADDRESSES: All filings in response to this notice must refer to AU Docket No. 14–78. The Wireless Telecommunications Bureau strongly encourages interested parties to file comments electronically, and requests that an additional copy of all comments and reply comments be submitted electronically to the following address: *auction97@fcc.gov.* Comments may be submitted by any of the following methods:

- Federal eRulemaking Portal: *http://www.regulations.gov.* Follow the instructions for submitting comments.
- Federal Communications Commission's Web site: *http://fjallfoss.fcc.gov/ecfs2/.* Follow the instructions for submitting comments.
- Paper Filers: Parties who choose to file by paper must file an original and five copies of each filing. Filings can be sent by hand or messenger delivery, by commercial overnight courier, or by first-class or overnight U.S. Postal Service mail. All filings must be addressed to the Commission's Secretary, Attn: WTB/ASAD, Office of the Secretary, Federal Communications Commission. All hand-delivered or messenger-delivered paper filings for the Commission's Secretary must be delivered to FCC Headquarters at 445 12th Street SW., Room TW–A325, Washington, DC 20554. All hand deliveries must be held together with rubber bands or fasteners. Any envelopes must be disposed of before entering the building. Commercial overnight mail (other than U.S. Postal Service Express Mail and Priority Mail) must be sent to 9300 East Hampton Drive, Capitol Heights, MD 20743. U.S. Postal Service first-class, Express, and Priority mail must be addressed to 445 12th Street SW., Washington, DC 20554.

People with Disabilities: Contact the FCC to request reasonable accommodations (accessible format documents, sign language interpreters, CART, etc.) by email: *FCC504@fcc.gov* or phone: 202–418–0530 or TTY: 202–418–0432.

FOR FURTHER INFORMATION CONTACT: *Wireless Telecommunications Bureau, Auctions and Spectrum Access Division:* For auction legal questions: Valerie Barrish at (202) 418–0660; for general auction questions: Jeff Crooks at (202) 418–0660 or Linda Sanderson at (717) 338–2868. *Broadband Division, WTB:* For AWS–3 service rules questions: Nancy Zaczek (legal) or Janet Young (technical) at (202) 418–2487.

SUPPLEMENTARY INFORMATION: This is a summary of the *Auction 97 Comment Public Notice* released on May 19, 2014. The complete text of the *Auction 97 Comment Public Notice,* including all attachments and related Commission documents, is available for public inspection and copying from 8:00 a.m. to 4:30 p.m. Eastern Time (ET) Monday through Thursday or from 8:00 a.m. to 11:30 a.m. ET on Fridays in the FCC Reference Information Center, 445 12th Street SW., Room CY–A257, Washington, DC 20554. The *Auction 97 Comment Public Notice* and its attachments, as well as related Commission documents, also may be purchased from the Commission's duplicating contractor, Best Copy and Printing, Inc. (BCPI), 445 12th Street SW., Room CY–B402, Washington, DC 20554, telephone 202–488–5300, fax 202–488–5563, or you may contact BCPI at its Web site: *http://www.BCPIWEB.com.* When ordering documents from BCPI, please provide the appropriate FCC document number, for example, DA 14–669. The *Auction 97 Comment Public Notice* and related documents also are available on the Internet at the Commission's Web site: *http://wireless.fcc.gov/auctions/97/,* or by using the search function for AU Docket No. 14–78 on the Commission's Electronic Comment Filing System (ECFS) Web page at *http://www.fcc.gov/cgb/ecfs/.*

I. Introduction

1. The Wireless Telecommunications Bureau (Bureau) announces an auction of 1,614 licenses in the 1695–1710 MHz, 1755–1780 MHz, and 2155–2180 MHz bands (the AWS–3 bands), and seeks comment on the procedures to be used for this auction. This auction, which is designated as Auction 97, is scheduled to commence on November 13, 2014.

2. The Commission is offering the licenses in Auction 97 pursuant to the Middle Class Tax Relief and Job Creation Act of 2012 (Spectrum Act). The Spectrum Act requires, among other things, that the Commission allocate for commercial use and license spectrum in certain specified frequency bands using a system of competitive bidding no later than February 2015. In February 2013, the National Telecommunications and Information Administration (NTIA) identified the 1695–1710 MHz band for reallocation from Federal use to non-Federal use in satisfaction of its Spectrum Act obligation. In the *AWS–3 Report and Order,* FCC 14–31, the Commission identified the 1755–1780 MHz band in satisfaction of the Spectrum Act's requirement that it identify fifteen megahertz of contiguous spectrum in addition to the bands specifically identified in the Spectrum Act.

II. Licenses To Be Offered in Auction 97

A. Description of Licenses

3. The 65 megahertz of AWS–3 spectrum available in Auction 97 will be licensed on a geographic area basis. Of the 1,614 licenses offered in Auction 97, 880 will be Economic Area (EA) licenses and 734 will be Cellular Market Area (CMA) licenses. The AWS–3 frequencies will be licensed in five and ten megahertz blocks, with each license having a total bandwidth of five, ten, or twenty megahertz.

4. The 1695–1710 MHz band will be licensed in an unpaired configuration for low-power mobile transmit (i.e.,

uplink) operations. The 1755–1780 MHz band will be licensed paired with the 2155–2180 MHz band, with the 1755–1780 MHz band authorized for low-power mobile transmit (i.e., uplink) operations and the 2155–2180 MHz band authorized for base station and fixed (i.e., downlink) operations. A complete list of the licenses offered in Auction 97 is available in Attachment A to the *Auction 97 Comment Public Notice,* available at *http://wireless.fcc.gov/auctions/default.htm?job=auction_summary&id=97.*

B. Incumbency Issues

5. In the *AWS–3 Report and Order,* the Commission allocated the 1695–1710 MHz and 1755–1780 MHz bands for commercial use. Licenses in 1695–1710 MHz band are being made available on a shared basis with incumbent Federal meteorological-satellite (MetSat) data users. Licenses in 1755–1780 MHz band are being made available on a shared basis with a limited number of Federal incumbents indefinitely, while many of the Federal systems will over time relocate out of the band. Operations in the 1695–1710 MHz and 1755–1780 MHz bands are subject to successful coordination with Federal incumbents in the applicable Protection Zones adopted by the Commission in the *AWS–3 Report and Order.* Federal systems in the 1695–1710 MHz and 1755–1780 MHz bands that are located in these established Protection Zones will operate on a co-equal, primary basis with commercial AWS licensees. Licenses to operate in the 1695–1710 MHz and 1755–1780 MHz bands are subject to the condition that the licensee must not cause harmful interference to an incumbent Federal entity relocating from these bands under an approved Transition Plan. This condition remains in effect until NTIA terminates the applicable authorization of the incumbent Federal entity. The 2155–2180 MHz band is already allocated for exclusive non-Federal, commercial use. Although there are no Federal users currently licensed or operating in this band, there are non-Federal incumbent Fixed Microwave and Broadband Radio Service licensees in the band. AWS–3 licensees will have to protect or relocate and/or share in the cost of relocating such incumbent licensees.

C. Commercial Spectrum Enhancement Act/Spectrum Act Requirements

6. The spectrum in the 1695–1710 MHz and 1755–1780 MHz bands is covered by a Congressional mandate that requires that auction proceeds fund the estimated relocation or sharing costs of incumbent Federal entities. In 2004, the Commercial Spectrum Enhancement Act (CSEA) established a Spectrum Relocation Fund (SRF) to reimburse eligible Federal agencies operating on certain frequencies that have been reallocated from Federal to non-Federal use for the cost of relocating their operations. The SRF is funded with cash proceeds attributable to ''eligible frequencies'' in an auction of licenses involving such frequencies. The CSEA requires the NTIA to notify the Commission at least six months in advance of a scheduled auction of eligible frequencies of eligible Federal entities' estimated relocation or sharing costs and the timelines for such relocation or sharing.

7. On May 13, 2014, pursuant to the CSEA, the NTIA notified the Commission of the estimated relocation or sharing costs and relocation timelines for eligible Federal entities assigned to frequencies in the 1695–1710 MHz and 1755–1780 MHz bands. The NTIA reported that the total estimated relocation or sharing costs for the 1695–1710 MHz band equal $527,069,000, and that the total estimated relocation or sharing costs for the 1755–1780 MHz band equal $4,575,603,000. This information can be found at *http://www.ntia.doc.gov/category/aws-3-transition.*

8. In addition to requiring that specified auction proceeds be deposited in the SRF, the CSEA, as amended by the Spectrum Act, requires that the total cash proceeds from any auction of eligible frequencies must equal at least 110 percent of the estimated relocation or sharing costs provided to the Commission by NTIA, and prohibits the Commission from concluding any auction of eligible frequencies that falls short of this revenue requirement. The Commission previously determined that ''total cash proceeds,'' for purposes of meeting the CSEA's revenue requirement, means winning bids net of any applicable bidding credit discounts at the end of bidding. Thus, whether CSEA's revenue requirements regarding eligible frequencies have been met at the end of an auction involving such frequencies depends upon whether winning bids that are attributable to such spectrum, net of any applicable bidding credit discounts, equal at least 110 percent of estimated relocation costs. The Commission also previously modified its reserve price rule pursuant to the CSEA to ensure that the CSEA's revenue requirement would be met.

III. Due Diligence

9. Each potential bidder is solely responsible for investigating and evaluating all technical and marketplace factors that may have a bearing on the value of the licenses that it is seeking in this auction. Each bidder is responsible for assuring that, if it wins a license, it will be able to build and operate facilities in accordance with the Commission's rules. The Commission makes no representations or warranties about the use of this spectrum for particular services. Each applicant should be aware that a Commission auction represents an opportunity to become a Commission licensee, subject to certain conditions and regulations. A Commission auction does not constitute an endorsement by the Commission of any particular service, technology, or product, nor does a Commission license constitute a guarantee of business success.

10. An applicant should perform its due diligence research and analysis before proceeding, as it would with any new business venture. Each potential bidder should perform technical analyses and/or refresh any previous analyses to assure itself that, should it become a winning bidder for any Auction 97 license, it will be able to build and operate facilities that will fully comply with all applicable technical and regulatory requirements. The Bureau strongly encourages each applicant to inspect any prospective transmitter sites located in, or near, the geographic area for which it plans to bid; confirm the availability of such sites; and familiarize itself with the Commission's rules regarding the National Environmental Policy Act.

11. The Bureau strongly encourages each applicant to conduct its own research prior to Auction 97 in order to determine the existence of pending administrative, rulemaking, or judicial proceedings that might affect its decisions regarding participation in the auction.

12. The Bureau strongly encourages participants in Auction 97 to continue such research throughout the auction. The due diligence considerations mentioned in the *Auction 97 Comment Public Notice* do not constitute an exhaustive list of steps that should be undertaken prior to participating in this auction. As always, the burden is on the potential bidder to determine how much research to undertake, depending upon the specific facts and circumstances related to its interests.

13. In addition to the foregoing due diligence considerations, which the Bureau encourages in all auctions, the

Bureau calls particular attention in this auction to the unique requirements presented by the occupancy of some of the available frequencies by incumbent Federal users. AWS–3 licensees can expect to share portions of the AWS–3 bands with various incumbent Federal users for a period of time as such users transition out of the bands, which may vary by geography and frequency. Moreover, some Federal users will remain in the AWS–3 bands, with shared use continuing indefinitely. The Commission and the NTIA intend to release additional information regarding the extent of sharing in the AWS–3 bands and the methods of coordination between commercial and Federal users. Additionally, the CSEA, as amended by the Spectrum Act, stipulates that Federal agencies that will receive reimbursement for their costs in relocating their operations from, or sharing, the ''eligible frequencies'' offered in this auction based on their approved transition plans, which the NTIA will make available to the public. The Bureau expects that all of this information will be material to an applicant's potential participation in Auction 97. Therefore, the Bureau strongly encourages each applicant to closely follow releases from the Commission and the NTIA concerning these issues and to carefully consider the technical and economic implications for commercial use of the AWS–3 bands.

IV. Bureau Seeks Comment on Auction Procedures

14. The Commission directed the Bureau, under its existing delegated authority, to seek comment on a variety of auction-specific procedures prior to the start of each auction. We therefore seek comment on the following issues relating to the conduct of Auction 97.

A. Auction Design

i. Simultaneous Multiple Round Auction

15. The Bureau proposes to conduct Auction 97 using a simultaneous multiple-round (SMR) auction format. An SMR auction offers every license for bid at the same time and consists of successive bidding rounds in which eligible bidders may place bids. Typically, bidding remains open on all licenses until bidding stops on every license. The Bureau seeks comment on this proposal.

ii. Anonymous Bidding

16. Consistent with past practice, the Bureau proposes to adopt procedures for limited information disclosure or ''anonymous bidding'' for Auction 97. Specifically, the Bureau proposes to withhold, until after the close of bidding, public release of (1) bidders' license selections on their short-form applications (FCC Form 175), (2) the amounts of bidders' upfront payments and bidding eligibility, and (3) information that may reveal the identities of bidders placing bids and taking other bidding-related actions.

17. Under these proposed limited information procedures, the amount of every bid placed and whether a bid was withdrawn (if withdrawals are permitted) would be disclosed after the close of every round, but the identities of bidders placing specific bids or withdrawals (if permitted) and the net bid amounts (reflecting bidding credits) would not be disclosed until after the close of the auction.

18. Bidders would have access to additional information about their own bids. For example, bidders would be able to view their own level of eligibility, before and during the auction, through the FCC Auction System.

19. Moreover, for the purpose of complying with 47 CFR 1.2105(c), which prohibits certain communications between applicants (formerly referred to as the ''anti-collusion rule''), applicants would be made aware of other applicants with which they will not be permitted to cooperate, collaborate, or communicate—including discussing bids, bidding strategies, or post-auction market structure. Specifically, the Bureau would notify separately each applicant with a short-form application on file for participation in Auction 97 whether applicants with short-form applications to participate in a pending auction, including but not limited to Auction 97, have applied for licenses in any of the same or overlapping geographic areas as that applicant.

20. After the close of bidding, bidders' license selections, upfront payment amounts, bidding eligibility, bids, and other bidding-related actions would be made publicly available.

21. The Bureau seeks comment on the details of its proposal for implementing anonymous bidding in Auction 97. The Bureau also seeks comment on alternatives to the use of anonymous bidding procedures for Auction 97. When the Commission originally proposed limited information disclosure procedures, it did so in response to analysis suggesting that under certain circumstances the competitiveness and economic efficiency of a simultaneous multiple-round auction may be enhanced if such information is withheld until after the close of the auction. The Bureau encourages parties to provide information about the benefits and costs of complying with limited information procedures in this auction as compared with the benefits and costs of alternative procedures that would provide for the disclosure of more information on bidder identities and interests in the auction. If commenters believe that the Bureau should not adopt procedures to limit the disclosure of certain bidder-specific information in Auction 97 until after the auction, they should explain their reasoning.

iii. Acknowledgement for Auction 97 Applicants

22. There are Federal incumbent users in the 1695–1710 MHz and 1755–1780 MHz bands, and the Commission adopted rules in the *AWS–3 Report and Order* to address commercial operations in these bands in light of the temporary and indefinite sharing of the bands by Federal incumbent users and commercial licensees, including a requirement that commercial licensees operate on a co-equal, primary operations with Federal systems within specified geographic zones, and a requirement that licensees in the 1755–1780 MHz band accept interference from Federal systems as long as such systems remain in the band. To implement these rules, the Bureau proposes to require an Auction 97 applicant to submit with its short-form application a signed statement acknowledging that the applicant's operations in the 1755–1780 MHz band may be subject to interference from Federal systems in certain geographic zones, that the applicant must accept interference from such Federal systems in those zones, and that the applicant has considered these risks before submitting any bids for applicable licenses in Auction 97. The Bureau seeks comment on this proposal.

B. Auction Structure

i. Bidding Rounds

23. Auction 97 will consist of sequential bidding rounds. The initial bidding schedule will be announced in a public notice to be released at least one week before the start of the auction.

24. The Commission will conduct Auction 97 over the Internet using the FCC Auction System. Bidders will also have the option of placing bids by telephone through a dedicated, toll-free Auction Bidder Line. The toll-free telephone number for the Auction Bidder Line will be provided to

qualified bidders prior to the start of the auction.

25. The Bureau proposes to retain the discretion to change the bidding schedule in order to foster an auction pace that reasonably balances speed with the bidders' need to study round results and adjust their bidding strategies. Under this proposal, the Bureau may change the amount of time for bidding rounds, the amount of time between rounds, or the number of rounds per day, depending upon bidding activity and other factors. The Bureau seeks comment on this proposal. Commenters should address the role of the bidding schedule in managing the pace of the auction, specifically discussing the tradeoffs in managing auction pace by bidding schedule changes, by changing the activity requirements or bid amount parameters, or by using other means.

ii. Stopping Rule

26. The Bureau has discretion to establish stopping rules before or during multiple round auctions in order to complete the auction within a reasonable time. The Bureau proposes to employ a simultaneous stopping rule approach in Auction 97, which means all licenses will remain available for bidding until bidding stops on every license. More specifically, bidding will close on all licenses after the first round in which no bidder submits any new bids, applies a proactive waiver, or withdraws any provisionally winning bids (if withdrawals are permitted). Thus, unless the Bureau announces alternative stopping procedures, the simultaneous stopping rule will be used in this auction, and bidding will remain open on all licenses until bidding stops on every license, regardless of whether bids are placed on individual licenses of licenses. Consequently, it is not possible to determine in advance how long Auction 97 will last.

27. The Bureau proposes to retain the discretion to exercise any of the following options during Auction 97: (a) Use a modified version of the simultaneous stopping rule that would close the auction for all licenses after the first round in which no bidder applies a waiver, withdraws a provisionally winning bid, or places any new bids on a license for which it is not the provisionally winning bidder. Thus, absent any other bidding activity, a bidder placing a new bid on a license for which it is the provisionally winning bidder would not keep the auction open under this modified stopping rule; (b) Use a modified version of the simultaneous stopping rule that would close the auction for all licenses after the first round in which no bidder applies a waiver, withdraws a provisionally winning bid, or places any new bids on a license that is not FCC-held. Thus, absent any other bidding activity, a bidder placing a new bid on a license that does not already have a provisionally winning bid (an ''FCC-held'' license) would not keep the auction open under this modified stopping rule; (c) Use a modified version of the simultaneous stopping rule that combines (a) and (b); (d) Declare that the auction will end after a specified number of additional rounds (special stopping rule). If the Bureau invokes this special stopping rule, it will accept bids in the specified final round(s), after which the auction will close; and (e) Keep the auction open even if no bidder places any new bids, applies a waiver, or withdraws (if withdrawals are permitted) any provisionally winning bids. In this event, the effect will be the same as if a bidder had applied a waiver. The activity rule will apply as usual, and a bidder with insufficient activity will either lose bidding eligibility or use a waiver.

28. The Bureau proposes to exercise these options only in certain circumstances, for example, where the auction is proceeding unusually slowly or quickly, there is minimal overall bidding activity, or it appears likely that the auction will not close within a reasonable period of time or will close prematurely. Before exercising these options, the Bureau is likely to attempt to change the pace of the auction by, for example, changing the number of bidding rounds per day and/or the minimum acceptable bids. The Bureau proposes to retain the discretion to exercise any of these options with or without prior announcement during the auction. The Bureau seeks comment on these proposals.

iii. Information Relating to Auction Delay, Suspension, or Cancellation

29. The Bureau proposes that it may delay, suspend, or cancel Auction 97 in the event of a natural disaster, technical obstacle, administrative or weather necessity, evidence of an auction security breach or unlawful bidding activity, or for any other reason that affects the fair and efficient conduct of competitive bidding. Additionally, the CSEA requires the Commission to cancel an auction of ''eligible frequencies'' if the total cash proceeds attributable to those frequencies do not meet CSEA's revenue requirement. The Bureau will notify participants of any such delay, suspension or cancellation by public notice and/or through the FCC Auction System's announcement function. If the auction is delayed or suspended, the Bureau may, in its sole discretion, elect to resume the auction starting from the beginning of the current round or from some previous round, or cancel the auction in its entirety. Network interruption may cause the Bureau to delay or suspend the auction. The Bureau emphasizes that it will exercise this authority solely at its discretion, and note that the exercise of its authority in this regard is not intended to be a substitute for situations in which bidders may wish to apply their activity rule waivers. The Bureau seeks comment on this proposal.

C. Auction Procedures

i. Upfront Payments and Bidding Eligibility

30. The Bureau has delegated authority and discretion to determine an appropriate upfront payment for each license being auctioned, taking into account such factors as the efficiency of the auction process and the potential value of similar licenses. An upfront payment is a refundable deposit made by each bidder to establish its eligibility to bid on licenses. Upfront payments that are related to the specific licenses being auctioned protect against frivolous or insincere bidding and provide the Commission with a source of funds from which to collect payments owed at the close of the auction. For Auction 97, the Bureau proposes to make the upfront payments equal to approximately half the proposed minimum opening bids. The proposed upfront payments are similar to those used in the recent auction of H Block licenses in the 1915–1920 MHz and 1995–2000 MHz bands. The upfront payments for each license are set forth in Attachment A to the *Auction 97 Comment Public Notice.* The Bureau seeks comment on this proposal.

31. The Bureau further proposes that the amount of the upfront payment submitted by a bidder will determine its initial bidding eligibility in bidding units. The Bureau proposes to assign each license a specific number of bidding units, equal to one bidding unit per dollar of the upfront payment proposed for the license. The specific bidding units for each license are set forth in Attachment A to the *Auction 97 Comment Public Notice.* The number of bidding units for a given license is fixed and does not change during the auction as prices change. A bidder's upfront payment is not attributed to specific licenses of licenses. Rather, a bidder may place bids on any combination of the licenses it selected on its short-form

application (FCC Form 175), provided that the total number of bidding units associated with those licenses does not exceed its current eligibility. A bidder cannot increase its eligibility during the auction; it can only maintain its eligibility or decrease its eligibility. Thus, in calculating its upfront payment amount and hence its initial bidding eligibility, an applicant must determine the maximum number of bidding units on which it may wish to bid (or hold provisionally winning bids) in any single round and submit an upfront payment amount covering that total number of bidding units. The Bureau seeks comment on these proposals.

ii. Activity Rule

32. An activity rule requires bidders to bid actively throughout the auction, rather than wait until late in the auction before participating. A bidder's activity in a round will be the sum of the bidding units associated with any licenses upon which it places bids during the current round and the bidding units associated with any licenses for which it holds provisionally winning bids placed in previous rounds. Bidders are required to be active on a specific percentage of their current bidding eligibility during each round of the auction. Failure to maintain the requisite activity level will result in the use of an activity rule waiver, if any remain, or a reduction in the bidder's eligibility, possibly curtailing or eliminating the bidder's ability to place additional bids in the auction.

33. The Bureau proposes to divide the auction into at least two stages, each characterized by a different activity requirement. The auction will start in Stage One. The Bureau proposes to advance the auction to the next stage by announcement during the auction. In exercising this discretion, the Bureau will consider a variety of measures of auction activity, including but not limited to the percentage of bidding units associated with licenses on which there are new bids, the number of new bids, and the increase in revenue. The Bureau seeks comment on these proposals.

34. The Bureau proposes the following activity requirements, while noting again that the Bureau retains the discretion to change stages unilaterally by announcement during the auction: Stage One—In each round of the first stage of the auction, a bidder desiring to maintain its current bidding eligibility is required to be active on bidding units associated with licenses representing at least 80 percent of its current bidding eligibility. Failure to maintain the required activity level will result in the use of an activity rule waiver or a reduction in the bidder's bidding eligibility for the next round of bidding. During Stage One, a bidder's reduced eligibility for the next round will be calculated by multiplying the bidder's current round activity by five-fourths (5/4); Stage Two—In each round of the second stage, a bidder desiring to maintain its current bidding eligibility is required to be active on 95 percent of its current bidding eligibility. Failure to maintain the required activity level will result in the use of an activity rule waiver or a reduction in the bidder's bidding eligibility for the next round of bidding. During Stage Two, a bidder's reduced eligibility for the next round will be calculated by multiplying the bidder's current round activity by twenty-nineteenths (20/19).

35. The Bureau seeks comment on these activity requirements. Under this proposal, the Bureau will retain the discretion to change the activity requirements during the auction. For example, the Bureau could decide to add an additional stage with a higher activity requirement, not to transition to Stage Two if it believes the auction is progressing satisfactorily under the Stage One activity requirement, or to transition to Stage Two with an activity requirement that is higher or lower than the 95 percent proposed herein. If the Bureau exercises this discretion, it will alert bidders by announcement in the FCC Auction System.

iii. Activity Rule Waivers and Reducing Eligibility

36. When a bidder's eligibility in the current round is below the required minimum level, it may preserve its current level of eligibility through an activity rule waiver. An activity rule waiver applies to an entire round of bidding, not to a particular bid. Activity rule waivers, which can be either proactive or automatic, are principally a mechanism for a bidder to avoid the loss of bidding eligibility in the event that exigent circumstances prevent it from bidding in a particular round.

37. The FCC Auction System assumes that a bidder that does not meet the activity requirement would prefer to use an activity rule waiver (if available) rather than lose bidding eligibility. Therefore, the system will automatically apply a waiver at the end of any bidding round in which a bidder's activity level is below the minimum required unless (1) the bidder has no activity rule waivers remaining, or (2) the bidder overrides the automatic application of a waiver by reducing eligibility, thereby meeting the activity requirement. If a bidder has no waivers remaining and does not satisfy the required activity level, the bidder's current eligibility will be permanently reduced, possibly curtailing or eliminating the ability to place additional bids in the auction.

38. A bidder with insufficient activity may wish to reduce its bidding eligibility rather than use an activity rule waiver. If so, the bidder must affirmatively override the automatic waiver mechanism during the bidding round by using the ''reduce eligibility'' function in the FCC Auction System. In this case, the bidder's eligibility is permanently reduced to bring it into compliance with the activity rule described above. Reducing eligibility is an irreversible action; once eligibility has been reduced, a bidder will not be permitted to regain its lost bidding eligibility, even if the round has not yet closed.

39. Under the proposed simultaneous stopping rule, a bidder may apply an activity rule waiver proactively as a means to keep the auction open without placing a bid. If a bidder proactively applies an activity rule waiver (using the ''apply waiver'' function in the FCC Auction System) during a bidding round in which no bids are placed or withdrawn, the auction will remain open and the bidder's eligibility will be preserved. An automatic waiver applied by the FCC Auction System in a round in which there are no new bids, withdrawals (if permitted), or proactive waivers will not keep the auction open. A bidder cannot apply a proactive waiver after bidding in a round, and applying a proactive waiver will preclude it from placing any bids in that round. Applying a waiver is irreversible; once a proactive waiver is submitted, it cannot be unsubmitted, even if the round has not yet closed.

40. Consistent with recent Commission auctions, the Bureau proposes that each bidder in Auction 97 be provided with a total of three activity rule waivers that may be used as at the bidder's discretion during the course of the auction. The Bureau seeks comment on this proposal.

iv. Reserve Price and Minimum Opening Bids

41. The Commission has directed the Bureau to seek comment on the use of a minimum opening bid amount and/or reserve price prior to the start of each auction. Normally, a reserve price is an absolute minimum price below which an item or items will not be sold in a given auction. If a reserve price is utilized, the specific amount of the reserve price may be disclosed or undisclosed. A minimum opening bid, on the other hand, is the minimum bid

price set at the beginning of the auction below which no bids are accepted. It is generally used to accelerate the competitive bidding process. It is possible for the minimum opening bid and the reserve price to be the same amount.

42. Among other factors the Bureau must consider in deciding whether to employ either or both of these mechanisms is the amount of spectrum being auctioned, levels of incumbency, the availability of technology to provide service, the size of the geographic service areas, the extent of interference with other spectrum bands, and any other relevant factors that could have an impact on the spectrum being auctioned.

a. Reserve Price

43. The Commission is statutorily obliged to consider and balance a variety of public interests and objectives when establishing service rules and licensing procedures with respect to the public spectrum resource. These objectives include promoting recovery for the public a portion of the value of that resource. Certain of the frequencies in the AWS–3 bands are ''eligible frequencies'' under the CSEA, and the CSEA requires that auction proceeds fund the estimated relocation or sharing costs of incumbent federal entities operating on these frequencies. In view of this, the Bureau will establish reserve prices for the AWS–3 licenses offered in Auction 97.

44. The CSEA requires that the total cash proceeds attributable to ''eligible frequencies'' be at least 110 percent of the total estimated relocation or sharing costs provided to the Commission pursuant to the CSEA before the Commission may conclude an auction involving such frequencies. If this condition is not met, the CSEA requires the Commission to cancel the auction. For purposes of determining whether the CSEA's revenue requirement has been met, the Commission has determined that ''total cash proceeds'' means winning bids net of any applicable bidding credit discounts at the end of bidding (e.g., exclusive of any Tribal lands bidding credit).

45. The NTIA has notified the Commission that the total estimated relocation or sharing costs for the 1695–1710 MHz band equal $527,069,000, and that the total estimated relocation or sharing costs for the 1755–1780 MHz band equal $4,575,603,000. Accordingly, the Bureau proposes one aggregate reserve price for the 1695–1710 MHz band and a separate aggregate reserve price for the paired 1755–1780/2155–2180 MHz band.

46. The Bureau proposes to establish an aggregate reserve price of $579,775,900 for the licenses in the 1695–1710 MHz band. This aggregate reserve price is 110 percent of total estimated relocation or sharing costs of $527,069,000 provided by the NTIA for this band and, therefore, the minimum reserve price required by the CSEA. Given that the 1695–1710 MHz band consists entirely of ''eligible frequencies,'' the Bureau proposes that the winning bid for each license in this band, net of any applicable bidding credit discounts at the end of bidding (e.g., exclusive of any Tribal lands bidding credit), will be counted toward meeting the reserve price for the band. Thus, the aggregate reserve price will be met if the total winning bids for the licenses in the 1695–1710 MHz band, net of any applicable bidding credit discounts at the end of bidding (e.g., exclusive of any Tribal lands bidding credit), is at least $579,775,900.

47. The 1755–1780 MHz band will be licensed paired with the 2155–2180 MHz band. The lower half of the frequencies in each paired license, i.e., those in the 1755–1780 MHz band, are ''eligible frequencies'' and are thus subject to CSEA requirements. To meet CSEA's requirements, the Bureau proposes to establish an aggregate reserve price of $5,033,163,300 for the 1755–1780 MHz frequencies. This aggregate reserve price is 110 percent of total estimated relocation or sharing costs of $4,575,603,000 for the 1755–1780 MHz band provided by the NTIA and, therefore, the minimum reserve price required by CSEA. Because these frequencies are one half of the frequencies authorized for use by each of the 1755–1780/2155–2180 MHz paired licenses, the Bureau proposes that one-half of each winning bid for each of the paired 1755–1780/2155–2180 MHz licenses, net of any applicable bidding credit discounts at the end of bidding, will be counted toward meeting the reserve price. The aggregate reserve price will be met if one half of the total winning bids for the paired 1755–1780/2155–2180 MHz licenses in, net of any applicable bidding credit discounts at the end of bidding (e.g., exclusive of any Tribal lands bidding credit), is at least $5,033,163,300. Therefore, the winning ''net'' bids for the paired 1755–1780/2155–2180 MHz licenses must be at least twice that amount, or $10,066,326,600, in order for the Commission to conclude the auction.

48. The Bureau seeks comment on its proposed reserve prices for Auction 97 and its proposals for implementing them. The Bureau encourages commenters to address any additional specific issues related to the use of reserve prices. The Bureau asks that commenters describe in detail the specific factors that lead them to their conclusions.

49. In light of the proposal to adopt procedures for limited information disclosure for Auction 97, if information regarding net bid amounts is not provided during the auction, the Bureau proposes to issue an announcement in the FCC Auction System, viewable by bidders and the general public, stating that a reserve price has been met immediately following the first round in which that occurs. However, due to factors such as bid withdrawals and the effect of bidding credits, an announcement that the reserve price has been met following a round of the auction does not guarantee that the reserve price will continue to be met. Accordingly, the Bureau will make a further announcement in the FCC Auction System after any round in which the reserve price status changes. The Bureau seeks comment this proposal.

b. Minimum Opening Bids

50. The Bureau proposes to establish minimum opening bid amounts for Auction 97. The Bureau believes a minimum opening bid amount, which has been used in other auctions, is an effective bidding tool for accelerating the competitive bidding process. The Bureau proposes minimum opening bids that should accelerate the progress of the auction toward meeting (1) the reserve prices established to meet CSEA requirements and (2) the Spectrum Act deadline for licensing identified frequencies. The proposed minimum opening bids are higher than the proposed upfront payments so that the competitive bidding process can be accelerated without increasing the cost of eligibility.

51. The Bureau proposes to calculate minimum opening bid amounts for Auction 97 on a license-by-license basis using a formula based on bandwidth and license area population, similar to its approach in many previous spectrum auctions. The Bureau proposes to use a calculation based on $0.15 per megahertz of bandwidth per population (per ''MHz-pop'') for paired licenses and $0.05 per MHz-pop for unpaired licenses, adjusted for past geographic variations. Specifically, the Bureau proposes to incorporate pricing information from previous auctions to adjust the minimum opening bid calculations based on an index of relative winning bid amounts for licenses in each CMA and EA in

Auctions 66, 73, and 96, subject to a minimum of $0.01 per MHz-pop. This modification results in amounts ranging from $0.01 per MHz-pop to $0.53 per MHz-pop. The Bureau further proposes a minimum of $2,500 per license. The Bureau proposes to set the minimum opening bid amounts for the licenses covering the Gulf of Mexico at $2,000 per megahertz.

52. The proposed minimum opening bid amount for each AWS–3 license available in Auction 97, calculated pursuant to these procedures is set forth in Attachment A to the *Auction 97 Comment Public Notice.*

53. The Bureau seeks comment on its proposals concerning minimum opening bids. If commenters believe that these minimum opening bid amounts will result in unsold licenses, or are not reasonable amounts, they should explain why this is so and comment on the desirability of an alternative approach. If a commenter requests an alternative approach for a specific frequency block or a lower minimum opening bid amount for a specific license, it should justify the requested change in detail. If commenters disagree with the Bureau's proposed use of $0.15 per MHz-pop and $0.05 per MHz-pop, its approach to tailoring minimum opening bid amounts to account for relative prices among the CMAs and EAs in past auctions, or its selection of which past results to consider, the Bureau asks commenters to support their claims with valuation analyses and suggested minimum opening bid amount levels or formulas.

54. In establishing minimum opening bid amounts, the Bureau particularly seeks comment on factors that could reasonably have an impact on valuation of the licenses being auctioned, including the amount of spectrum being auctioned, levels of incumbency, the availability of technology to provide service, the size of the service areas, the size of the geographic service areas, issues of interference with other spectrum bands and any other relevant factors. The Bureau also seeks comment on whether the public interest would be served by having no minimum opening bid amount.

55. Commenters may also wish to address the general role of minimum opening bids in managing the pace of the auction. For example, commenters could compare using minimum opening bids—e.g., by setting higher minimum opening bids to reduce the number of rounds it takes licenses to reach their final prices—to other means of controlling auction pace, such as changes to bidding schedules or activity requirements.

v. Bid Amounts

56. The Bureau proposes that, in each round, an eligible bidder will be able to place a bid on a given license using one or more pre-defined bid amounts. Under this proposal, the FCC Auction System interface will list the acceptable bid amounts for each license. The Bureau proposes to calculate bid amounts in the following manner.

a. Minimum Acceptable Bids

57. The first of the acceptable bid amounts is called the minimum acceptable bid amount. The minimum acceptable bid amount for a license will be equal to its minimum opening bid amount until there is a provisionally winning bid on the license. The Bureau proposes to calculate minimum acceptable bids based on provisionally winning bids and an activity-based formula.

58. After there is a provisionally winning bid for a license, the minimum acceptable bid amount for that license will be equal to the amount of the provisionally winning bid plus a percentage of that bid amount calculated using an activity-based formula. In general, the percentage will be higher for a license receiving many bids than for a license receiving few bids. In the case of a license for which the provisionally winning bid has been withdrawn, the minimum acceptable bid amount will equal the second highest bid received for the license.

59. The percentage of the provisionally winning bid used to establish the minimum acceptable bid amount (''the additional percentage'') is calculated based on an activity index at the end of each round. The activity index is a weighted average of (a) the number of distinct bidders placing a bid on the license in that round, and (b) the activity index from the prior round. The additional percentage is determined as one plus the activity index times a minimum percentage amount, with the result not to exceed a given maximum. The additional percentage is then multiplied by the provisionally winning bid amount to obtain the minimum acceptable bid for the next round. The Bureau proposes initially to set the weighting factor at 0.5, the minimum percentage at 0.1 (10%), and the maximum percentage at 0.3 (30%). Hence, at these initial settings, the minimum acceptable bid for a license will be between ten percent and thirty percent higher than the provisionally winning bid, depending upon the bidding activity for the license. Equations and examples are shown in Attachment B to the *Auction 97 Comment Public Notice.* The Bureau seeks comment on whether to use this activity-based formula or a different approach.

b. Additional Bid Amounts

60. The Bureau proposes to calculate any additional bid amounts using the minimum acceptable bid amount and a bid increment percentage—more specifically, by multiplying the minimum acceptable bid by one plus successively higher multiples of the bid increment percentage. If, for example, the bid increment percentage is 5 percent, the calculation of the first additional acceptable bid amount is (minimum acceptable bid amount) * (1 + 0.05), rounded, or (minimum acceptable bid amount) * 1.05, rounded; the second additional acceptable bid amount equals the minimum acceptable bid amount times one plus two times the bid increment percentage, rounded, or (minimum acceptable bid amount) * 1.10, rounded; etc. The Bureau will round the results using the Commission's standard rounding procedures for auctions. The Bureau proposes initially to set the bid increment percentage at 5 percent.

61. For Auction 97, the Bureau proposes to begin the auction with nine acceptable bid amounts per license (the minimum acceptable bid amount and eight additional bid amounts).

c. Bid Amount Changes

62. The Bureau retains the discretion to change the minimum acceptable bid amounts, the additional bid amounts, the number of acceptable bid amounts, and the parameters of the formulas used to calculate minimum acceptable bid amounts and additional bid amounts if the Bureau determines that circumstances so dictate. Further, the Bureau retains the discretion to do so on a license-by-license basis. The Bureau also retains the discretion to limit (a) the amount by which a minimum acceptable bid for a license may increase compared with the corresponding provisionally winning bid, and (b) the amount by which an additional bid amount may increase compared with the immediately preceding acceptable bid amount. For example, the Bureau could set a $10 million limit on increases in minimum acceptable bid amounts over provisionally winning bids. Thus, if the activity-based formula calculates a minimum acceptable bid amount that is $20 million higher than the provisionally winning bid on a license, the minimum acceptable bid amount would instead be capped at $10 million above the provisionally winning bid.

The Bureau seeks comment on the circumstances under which it should employ such a limit, factors it should consider when determining the dollar amount of the limit, and the tradeoffs in setting such a limit or changing other parameters—such as changing the minimum acceptable bid percentage, the bid increment percentage, or the number of acceptable bid amounts. If the Bureau exercises this discretion, it will alert bidders by announcement in the FCC Auction System.

63. The Bureau seeks comment on these proposals. If commenters disagree with the proposal to begin the auction with nine acceptable bid amounts per license, they should suggest an alternative number of acceptable bid amounts to use at the beginning of the auction and an alternative number to use later in the auction. Commenters may wish to address the role of the minimum acceptable bids and the number of acceptable bid amounts in managing the pace of the auction and the tradeoffs in managing auction pace by changing the bidding schedule, activity requirements, or bid amounts, or by using other means.

vi. Provisionally Winning Bids

64. Provisionally winning bids are bids that would become final winning bids if the auction were to close in that given round. At the end of a bidding round, the FCC Auction System determines a provisionally winning bid for each license based on the highest bid amount received for the license. These bids become the provisionally winning bids for the round.

65. If identical high bid amounts are submitted on a license in any given round (i.e., tied bids), the FCC Auction System will use a random number generator to select a single provisionally winning bid from among the tied bids. (The Auction System assigns a random number to each bid when the bid is entered. The tied bid with the highest random number wins the tiebreaker.) The remaining bidders, as well as the provisionally winning bidder, can submit higher bids in subsequent rounds. However, if the auction were to end with no other bids being placed, the winning bidder would be the one that placed the provisionally winning bid.

66. The set of provisionally winning bids is determined after every round in which new bids are submitted. The provisionally winning bids at the end of the auction become winning bids, provided that any applicable reserve prices have been met. The Bureau reminds bidders that provisionally winning bids count toward activity for purposes of the activity rule.

vii. Bid Removal

67. For Auction 97, the Bureau proposes the following bid removal procedures. Before the close of a bidding round, a bidder has the option of removing any bid placed in that round. By removing a selected bid in the FCC Auction System, a bidder may effectively ''undo'' any bid placed within that round. Once a round closes, a bidder may no longer remove a bid. The Bureau seeks comment on this bid removal proposal.

viii. Bid Withdrawal

68. When permitted in an auction, bid withdrawals provide a bidder with the option of withdrawing bids placed in prior rounds that have become provisionally winning bids. The Commission has explained that allowing bid withdrawals facilitates efficient aggregation of licenses and the pursuit of backup strategies as information becomes available during the course of an auction, but has recognized that in some instances, bidders may seek to withdraw bids for improper reasons. The Bureau therefore has discretion in managing the auction to limit the number of withdrawals to prevent any bidding abuses. Applying this reasoning to Auction 97, the Bureau proposes to allow each bidder to withdraw provisionally winning bids in no more than two rounds during the course of the auction. To permit a bidder to withdraw bids in more than two rounds may encourage insincere bidding or the use of withdrawals for anti-competitive purposes. The two rounds in which a bidder may withdraw provisionally winning bids will be at the bidder's discretion, and there is no limit on the number of provisionally winning bids that a bidder may withdraw in either of the rounds in which it withdraws bids. Withdrawals must be in accordance with the Commission's rules, including the bid withdrawal payment provisions specified in 47 CFR 1.2104(g).

69. The Bureau seeks comment on this proposal. If commenters disagree with this proposal, the Bureau asks them to support their arguments by taking into account the licenses available, the impact on auction dynamics and the pricing mechanism, and the effects on the bidding strategies of other bidders.

D. Post-Auction Payments

i. Interim Withdrawal Payment Percentage

70. The Bureau seeks comment on the appropriate percentage of a withdrawn bid that should be assessed as an interim withdrawal payment in the event that a final withdrawal payment cannot be determined at the close of the auction. In general, the Commission's rules provide that a bidder that withdraws a bid during an auction is subject to a withdrawal payment equal to the difference between the amount of the withdrawn bid and the amount of the winning bid in the same or subsequent auction(s). If a bid is withdrawn and no subsequent higher bid is placed and/or the license is not won in the same auction, the final withdrawal payment cannot be calculated until after the close of a subsequent auction in which a higher bid for the license (or the equivalent to the license) is placed or the license is won. When that final payment cannot yet be calculated, the bidder responsible for the withdrawn bid is assessed an interim bid withdrawal payment, which will be applied toward any final bid withdrawal payment that is ultimately assessed. 47 CFR 1.2104(g)(1) requires that the percentage of the withdrawn bid to be assessed as an interim bid withdrawal payment be between three percent and twenty percent and that it be set in advance of the auction.

71. The Commission has determined that the level of the interim withdrawal payment in a particular auction will be based on the nature of the service and the inventory of the licenses being offered. The Commission has noted that it may impose a higher interim withdrawal payment percentage to deter the anti-competitive use of withdrawals when, for example, bidders likely will not need to aggregate the licenses being offered in the auction, such as when few licenses are offered that are on adjacent frequencies or in adjacent areas, or when there are few synergies to be captured by combining licenses. With respect to the AWS–3 licenses being offered in Auction 97, the service rules permit a wide variety of advanced services, some of which may best be offered by combining licenses on adjacent frequencies or in adjacent areas, and the licenses will be offered under different geographic licensing schemes and bandwidth sizes. Balancing the potential need for bidders to use withdrawals to avoid winning incomplete combinations of licenses with the Bureau's interest in deterring undesirable strategic use of withdrawals, the Bureau proposes a percentage below the maximum twenty percent permitted under the current rules but above the three percent previously provided by the Commission's rules. Specifically, the Bureau proposes to establish an interim

bid withdrawal payment of ten percent of the withdrawn bid for this auction. The Bureau seeks comment on this proposal.

ii. Additional Default Payment Percentage

72. Any winning bidder that defaults or is disqualified after the close of an auction (i.e., fails to remit the required down payment within the prescribed period of time, fails to submit a timely long-form application, fails to make full and timely final payment, or is otherwise disqualified) is liable for a default payment under 47 CFR 1.2104(g)(2). This payment consists of a deficiency payment, equal to the difference between the amount of the Auction 97 bidder's winning bid and the amount of the winning bid the next time a license covering the same spectrum is won in an auction, plus an additional payment equal to a percentage of the defaulter's bid or of the subsequent winning bid, whichever is less.

73. The Commission's rules provide that, in advance of each auction, it will establish a percentage between three and twenty percent of the applicable bid to be assessed as an additional default payment. As the Commission has indicated, the level of this additional payment in each auction will vary based on the nature of the service and the inventory of the licenses being offered.

74. Defaults weaken the integrity of the auction process and may impede the deployment of service to the public, however, the Bureau does not believe the detrimental effects of any defaults in Auction 97 are likely to be unusually great. Balancing these considerations, for Auction 97, the Bureau proposes to establish an additional default payment of fifteen percent of the applicable bid. The Bureau seeks comment on this proposal.

V. *Ex Parte* Rules

75. This proceeding has been designated as a ''permit-but-disclose'' proceeding in accordance with the Commission's *ex parte* rules. Persons making oral *ex parte* presentations are reminded that memoranda summarizing the presentations must contain summaries of the substance of the presentations and not merely a listing of the subjects discussed. More than a one or two sentence description of the views and arguments presented is generally required. Other provisions pertaining to oral and written *ex parte* presentations in permit-but-disclose proceedings are set forth in 47 CFR 1.1206(b).

Federal Communications Commission.

Gary D. Michaels,

Deputy Chief, Auctions and Spectrum Access Division, WTB.

[FR Doc. 2014–12824 Filed 5–30–14; 8:45 am]

BILLING CODE 6712–01–P

FEDERAL RESERVE SYSTEM

Change in Bank Control Notices; Acquisitions of Shares of a Bank or Bank Holding Company

The notificants listed below have applied under the Change in Bank Control Act (12 U.S.C. 1817(j)) and § 225.41 of the Board's Regulation Y (12 CFR 225.41) to acquire shares of a bank or bank holding company. The factors that are considered in acting on the notices are set forth in paragraph 7 of the Act (12 U.S.C. 1817(j)(7)).

The notices are available for immediate inspection at the Federal Reserve Bank indicated. The notices also will be available for inspection at the offices of the Board of Governors. Interested persons may express their views in writing to the Reserve Bank indicated for that notice or to the offices of the Board of Governors. Comments must be received not later than June 17, 2014.

A. Federal Reserve Bank of St. Louis (Yvonne Sparks, Community Development Officer) P.O. Box 442, St. Louis, Missouri 63166–2034:

1. *David Leon Barnett and Linda Kay Barnett,* both of Summersville, Missouri, jointly; to acquire voting shares of Summersville Bancorporation, Inc., and thereby indirectly acquire voting shares of Community Bank, N.A., both in Summersville, Missouri.

B. Federal Reserve Bank of Dallas (E. Ann Worthy, Vice President) 2200 North Pearl Street, Dallas, Texas 75201–2272:

1. *Kenneth D. Willmon, individually and as co-trustee of AIM Bancshares, Inc. 401(k) and Employee Stock Ownership Program; Lanny B. Modawell; Marjorie Willmon; and Debra Willmon,* all of Lubbock, Texas; to retain voting shares of AIM Bancshares, Inc., Lovelland, Texas, and thereby indirectly retain voting shares of AimBank, Littlefield, Texas.

Board of Governors of the Federal Reserve System, May 28, 2014.

Michael J. Lewandowski,

Associate Secretary of the Board.

[FR Doc. 2014–12672 Filed 5–30–14; 8:45 am]

BILLING CODE 6210–01–P

DEPARTMENT OF HEALTH AND HUMAN SERVICES

Centers for Medicare & Medicaid Services

[Document Identifiers: CMS–10277 and CMS–10518]

Agency Information Collection Activities: Submission for OMB Review; Comment Request

ACTION: Notice.

SUMMARY: The Centers for Medicare & Medicaid Services (CMS) is announcing an opportunity for the public to comment on CMS' intention to collect information from the public. Under the Paperwork Reduction Act of 1995 (PRA), federal agencies are required to publish notice in the **Federal Register** concerning each proposed collection of information, including each proposed extension or reinstatement of an existing collection of information, and to allow a second opportunity for public comment on the notice. Interested persons are invited to send comments regarding the burden estimate or any other aspect of this collection of information, including any of the following subjects: (1) The necessity and utility of the proposed information collection for the proper performance of the agency's functions; (2) the accuracy of the estimated burden; (3) ways to enhance the quality, utility, and clarity of the information to be collected; and (4) the use of automated collection techniques or other forms of information technology to minimize the information collection burden.

DATES: Comments on the collection(s) of information must be received by the OMB desk officer by *June 30, 2014.*

ADDRESSES: When commenting on the proposed information collections, please reference the document identifier or OMB control number. To be assured consideration, comments and recommendations must be received by the OMB desk officer via one of the following transmissions: OMB, Office of Information and Regulatory Affairs, Attention: CMS Desk Officer, Fax Number: (202) 395–5806 *OR,* Email: *OIRA_submission@omb.eop.gov.*

To obtain copies of a supporting statement and any related forms for the proposed collection(s) summarized in this notice, you may make your request using one of following:

1. Access CMS' Web site address at *http://www.cms.hhs.gov/PaperworkReductionActof1995.*

2. Email your request, including your address, phone number, OMB number,

and CMS document identifier, to *Paperwork@cms.hhs.gov.*

3. Call the Reports Clearance Office at (410) 786–1326.

FOR FURTHER INFORMATION CONTACT: Reports Clearance Office at (410) 786–1326.

SUPPLEMENTARY INFORMATION: Under the Paperwork Reduction Act of 1995 (PRA) (44 U.S.C. 3501–3520), federal agencies must obtain approval from the Office of Management and Budget (OMB) for each collection of information they conduct or sponsor. The term ''collection of information'' is defined in 44 U.S.C. 3502(3) and 5 CFR 1320.3(c) and includes agency requests or requirements that members of the public submit reports, keep records, or provide information to a third party. Section 3506(c)(2)(A) of the PRA (44 U.S.C. 3506(c)(2)(A)) requires federal agencies to publish a 30-day notice in the **Federal Register** concerning each proposed collection of information, including each proposed extension or reinstatement of an existing collection of information, before submitting the collection to OMB for approval. To comply with this requirement, CMS is publishing this notice that summarizes the following proposed collection(s) of information for public comment:

1. *Type of Information Collection Request:* Revision of a currently approved collection; *Title of Information Collection:* Hospice Conditions of Participation and Supporting Regulations; *Use:* The Conditions of Participation and accompanying requirements are used by federal or state surveyors as a basis for determining whether a hospice qualifies for approval or re-approval under Medicare. The healthcare industry and CMS believe that the availability to the hospice of the type of records and general content of records, which the final rule (72 FR 32088) specifies, is standard medical practice, and is necessary in order to ensure the well-being and safety of patients and professional treatment accountability. Subsequent to the publication of the 60-day **Federal Register** notice (November 29, 2013; 78 FR 71617), the burden hours previously accounted for in OMB control number 0938–0302 have been updated and moved under this package to consolidate all hospice-related burden into a single package. *Form Number:* CMS–10277 (OCN: 0938–1067); *Frequency:* Yearly; *Affected Public:* Private sector (business or other for-profit and not-for-profit institutions); *Number of Respondents:* 3,897; *Total Annual Responses:* 19,654,387; *Total Annual Hours:* 3,300,735. (For policy questions regarding this collection contact Danielle Shearer at 410–786–6617.)

2. *Type of Information Collection Request:* New collection (Request for a new OMB control number); *Title of Information Collection:* Application for Participation in the Intravenous Immune Globulin (IVIG) Demonstration; Use: Traditional fee-for-service (FFS) Medicare covers some or all components of home infusion services depending on the circumstances. By special statutory provision, Medicare Part B covers intravenous immune globulin (IVIG) for persons with primary immune deficiency disease (PIDD) who wish to receive the drug at home. However, Medicare does not separately pay for any services or supplies to administer it if the person is not homebound and otherwise receiving services under a Medicare Home Health episode of care. As a result, many beneficiaries have chosen to receive the drug at their doctor's office or in an outpatient hospital setting. On Tuesday, January 3, 2012, the President signed into law the ''Medicare IVIG Access and Strengthening Medicare and Repaying Taxpayers Act of 2012.'' The act authorizes a 3-year demonstration under Part B of Title XVIII of the Social Security Act to evaluate the benefits of providing payment for items and services needed for the in-home administration of IVIG for the treatment of PIDD.

The statute limited the demonstration to 4,000 beneficiaries and $45 million, including administrative expenses for implementation and evaluation as well as benefit costs. The statute also required that an evaluation of the demonstration be conducted. Under this demonstration, Medicare will issue, under Part B, a bundled payment for all medically necessary supplies and services to administer IVIG in the home to enrolled beneficiaries who are not otherwise homebound and receiving home health care benefits. To implement the demonstration and ensure that statutory limits are not exceeded, it is necessary to positively enroll beneficiaries in the demonstration.

This collection of information is for the application to participate in the demonstration. Participation is voluntary and may be terminated by the beneficiary at any time. Beneficiaries who do not participate will continue to be eligible to receive all of the regular Medicare Part B benefits that they are would be eligible for in the absence of the demonstration. Subsequent to the publication of the 60-day **Federal Register** notice (March 7, 2014; 79 FR 13058), the application has been revised by changing the order of the questions, rewording questions, and allowing more response options. *Form Number:* CMS–10518 (OCN: 0938—New); *Frequency:* Annually; *Affected Public:* Individuals and households; *Number of Respondents:* 4,000; *Total Annual Responses:* 4,000; *Total Annual Hours:* 1,000. (For policy questions regarding this collection contact Jody Blatt at 410–786–6921.)

Dated: May 28, 2014.

Martique Jones,

Deputy Director, Regulations Development Group, Office of Strategic Operations and Regulatory Affairs.

[FR Doc. 2014–12665 Filed 5–30–14; 8:45 am]

BILLING CODE 4120–01–P

DEPARTMENT OF HEALTH AND HUMAN SERVICES

Centers for Medicare & Medicaid Services

[Document Identifiers: CMS–10340 and CMS–10380]

Agency Information Collection Activities: Proposed Collection; Comment Request

AGENCY: Centers for Medicare & Medicaid Services, HHS.

ACTION: Notice.

SUMMARY: The Centers for Medicare & Medicaid Services (CMS) is announcing an opportunity for the public to comment on CMS' intention to collect information from the public. Under the Paperwork Reduction Act of 1995 (the PRA), federal agencies are required to publish notice in the **Federal Register** concerning each proposed collection of information (including each proposed extension or reinstatement of an existing collection of information) and to allow 60 days for public comment on the proposed action. Interested persons are invited to send comments regarding our burden estimates or any other aspect of this collection of information, including any of the following subjects: (1) The necessity and utility of the proposed information collection for the proper performance of the agency's functions; (2) the accuracy of the estimated burden; (3) ways to enhance the quality, utility, and clarity of the information to be collected; and (4) the use of automated collection techniques or other forms of information technology to minimize the information collection burden.

DATES: Comments must be received by August 1, 2014:

ADDRESSES: When commenting, please reference the document identifier or OMB control number (OCN). To be assured consideration, comments and recommendations must be submitted in any one of the following ways:

1. *Electronically.* You may send your comments electronically to *http://www.regulations.gov.* Follow the instructions for ''Comment or Submission'' or ''More Search Options'' to find the information collection document(s) that are accepting comments.

2. *By regular mail.* You may mail written comments to the following address:

CMS, Office of Strategic Operations and Regulatory Affairs,
Division of Regulations Development,
Attention: Document Identifier/OMB Control Number _____,
Room C4–26–05,
7500 Security Boulevard,
Baltimore, Maryland 21244–1850.

To obtain copies of a supporting statement and any related forms for the proposed collection(s) summarized in this notice, you may make your request using one of following:

1. Access CMS' Web site address at *http://www.cms.hhs.gov/PaperworkReductionActof1995*.

2. Email your request, including your address, phone number, OMB number, and CMS document identifier, to *Paperwork@cms.hhs.gov*.

3. Call the Reports Clearance Office at (410) 786–1326.

FOR FURTHER INFORMATION CONTACT: Reports Clearance Office at (410) 786–1326.

SUPPLEMENTARY INFORMATION:

Contents

This notice sets out a summary of the use and burden associated with the following information collections. More detailed information can be found in each collection's supporting statement and associated materials (see **ADDRESSES**).

CMS–10340 Collection of Encounter Data From Medicare Advantage Organizations, Section 1876 Cost HMOS/CMPS, Section 1833 Health Care Prepayment Plans (HCPPS), and Pace Organizations

CMS–10380 Reporting Requirements for Grants to States for Rate Review Cycle I, Cycle II, Cycle III, and Cycle IV and Effective Rate Review Program

Under the Paperwork Reduction Act (PRA) (44 U.S.C. 3501–3520), federal agencies must obtain approval from the Office of Management and Budget (OMB) for each collection of information they conduct or sponsor. The term ''collection of information'' is defined in 44 U.S.C. 3502(3) and 5 CFR 1320.3(c) and includes agency requests or requirements that members of the public submit reports, keep records, or provide information to a third party. Section 3506(c)(2)(A) of the PRA requires federal agencies to publish a 60-day notice in the **Federal Register** concerning each proposed collection of information, including each proposed extension or reinstatement of an existing collection of information, before submitting the collection to OMB for approval. To comply with this requirement, CMS is publishing this notice.

Information Collection

1. *Type of Information Collection Request:* Extension of a currently approved collection; *Title of Information Collection:* Collection of Encounter Data from Medicare Advantage Organizations, Section 1876 Cost HMOS/CMPS, Section 1833 Health Care Prepayment Plans (HCPPS), and Pace Organizations; *Use:* CMS collects encounter data or data on each item or service delivered to enrollees of Medicare Advantage (MA) plans offered by MA organizations. MA organizations currently obtain this data from providers. CMS collects this information using standard transaction forms and code sets. CMS will use the data for determining risk adjustment factors for payment, updating the risk adjustment model, calculating Medicare DSH percentages, Medicare coverage purposes, and quality review and improvement activities. The data is also used to verify the accuracy and validity of the costs claimed on cost reports. For PACE organizations, encounter data would serve the same purpose it does related to the MA program and would be submitted in a similar manner. *Form Number:* CMS–10340 (OCN: 0938–1152); *Frequency:* Weekly; *Affected Public:* Private sector (business or other for-profits); *Number of Respondents:* 683; *Total Annual Responses:* 516,493,635; *Total Annual Hours:* 34,433 (For policy questions regarding this collection contact Michael Massimini at 410–786–1566).

2. *Type of Information Collection Request:* Revision of a currently approved collection; *Title of Information Collection:* Reporting Requirements for Grants to States for Rate Review Cycle I, Cycle II, Cycle III, and Cycle IV and Effective Rate Review Program; *Use:* Under the section 1003 of the Affordable Care Act (ACA) (section 2794 of the Public Health Service Act), the Secretary, in conjunction with the states and territories, is required to establish a process for the annual review, beginning with the 2010 plan year, of unreasonable increases in premiums for health insurance coverage. Section 2794(c) requires the Secretary to establish the Rate Review Grant Program to assist states to implement this provision. In addition, section 2794(c) requires the Rate Review Grant Program to assist states in the establishment and enhancement of ''Data Centers'' that collect, analyze, and disseminate health care pricing data to the public.

Concurrent with this information collection request, HHS released Cycle IV of the Rate Review Grants, ''Grants to States to Support Health Insurance Rate Review and Increase Transparency in the Pricing of Medical Services.'' The purpose of Cycle IV of the Rate Review Grant Program is to continue the rate review successes of Cycles I, II, and III, as well as to provide greater support to Data Centers, thereby enhancing medical pricing transparency. States and territories that apply for funds are required to complete the grant application. States and territories that are awarded funds under this funding opportunity are required to provide the Secretary with rate review data, four quarterly reports, and one annual report per year until the end of the grant period detailing the state's progression towards a more comprehensive and effective rate review process. A final report is due at the end of the grant period. This information collection is required for effective monitoring of grantees and to fulfill statutory requirements under section 2794(b)(1)(A) of the ACA that requires grantees, as a condition of receiving a grant authorized under section 2794(c), to report to the Secretary information about premium increases.

On May 23, 2011, CMS published a final rule with comment period (76 FR 29964) to implement the annual review of unreasonable increases in premiums for health insurance coverage called for by section 2794. Under the regulation, if CMS determines that a state has an Effective Rate Review Program in a given market, using the criteria set forth in the rule, CMS will adopt that state's determinations regarding whether rate increases in that market are unreasonable, provided that the state reports its final determinations to CMS and explains the bases of its determinations. The final rule titled ''Patient Protection and Affordable Care Act; Health Insurance Market Rules; Rate Review'' (78 FR 13406, February 27, 2013) amends the standards under

the Effective Rate Review Program. Currently, CMS relies on publicly available information and annual calls with individual states to obtain the information needed to evaluate whether a state has begun to or continues to satisfy the Effective Rate Review Program criteria. CMS is proposing to instead collect the information in writing from all states that would like to request effective status. *Form Number:* CMS–10380 (OCN: 0938–1121); *Frequency:* Annually and On occasion; *Affected Public:* Public Sector and State and Territory Governments; *Number of Respondents:* 50; *Total Annual Responses:* 553; *Total Annual Hours:* 20,951. (For policy questions regarding this collection contact Susie Lorden at 301–492–4162.)

Dated: May 28, 2014.

Martique Jones,

Deputy Director, Regulations Development Group, Office of Strategic Operations and Regulatory Affairs.

[FR Doc. 2014–12664 Filed 5–30–14; 8:45 am]

BILLING CODE 4120–01–P

DEPARTMENT OF HEALTH AND HUMAN SERVICES

Administration for Children and Families

Submission for OMB Review; Comment Request

Title: Social Services Block Grant (SSBG) Post-expenditure Report.

OMB No.: 0970–0234.

Description:

Purpose: To request approval to: (1) Extend the collection of post-expenditure data using the current OMB approved post-expenditure reporting form (OMB No. 0970–0234) past the current expiration date of July 31, 2014; and (2) to request that States continue to voluntarily submit estimated pre-expenditure and recipient data using the post-expenditure reporting form, as part of the required annual intended use plan.

The Social Services Block Grant program (SSBG) is authorized under Title XX of the Social Security Act, as amended, and is codified at 42 U.S.C. 1397 through § 13097e. SSBG provides funds to assist States in delivering critical services to vulnerable older adults, persons with disabilities, at-risk adolescents and young adults, and children and families. SSBG funds are allocated to each State in proportion to their relative population.

Each State is responsible for designing and implementing its own SSBG program to meet the specialized needs of their most vulnerable populations. States may determine what services will be provided, who will be eligible, and how funds will be distributed among the various services. State or local SSBG agencies (i.e., county, city, regional offices) may provide the services or States may purchase services from qualified agencies, organizations, or individuals. States must administer their SSBG program according to their approved intended use plan, along with amendments, and in conformance with their own implementing rules and policies. The Office of Community Services (OCS), Administration for Children and Families administers the SSBG program.

Annually, States are required to submit a pre-expenditure report or intended use plan as a prerequisite to receiving SSBG funds. The pre-expenditure report must include information on the types of services to be supported and the characteristics of individuals to be served. This report is to be submitted 30 days prior to the start of the fiscal year (June 1 if the State operates on a July–June fiscal year, or September 1 if the State operates on a Federal fiscal year). No specific format is required for the intended use plan. States are required to submit a revised intended use plan if the planned use of SSBG funds changes during the year (42 U.S.C. 1397c).

In order to provide a more accurate analysis of the extent to which funds are spent ''in a manner consistent'' with each of the States plan for their use, as required by 42 U.S.C. 1397e(a), ACF continues to request that States voluntarily use the format of the post-expenditure reporting form to provide estimates of the amount of expenditures and the number of recipients, by service category, as part of the State's intended use plan. Most of the States are currently using the format of the post-expenditure reporting form to report estimated expenditures and recipients, by service category, as part of their intended use plan.

On annual basis, States also are required to submit a post-expenditure report that details their use of SSBG funds in each of 29 service categories. States are required to submit their post-expenditure report within six months of the end of the period covered by the report. The post-expenditure report must address: (1) The number of individuals (including number of children and number of adults) who receive services paid for, in whole or in part, with Federal funds under the SSBG; (2) The amount of SSBG funds spent in providing each service; (3) The total amount of Federal, State, and local funds spent in providing each service, including SSBG funds; and (4) The method(s) by which each service is provided, showing separately the services provided by public and private agencies (42 U.S.C. 1397e; 42 CFR 96.74).

This request seeks approval to continue the use of the current OMB approved post-expenditure reporting form (OMB No. 0970–0234) for estimating expenditures and recipients as part of States' intended use plans and for annual post-expenditure reporting. Until recently, States reported the data on the post-expenditure reporting form in Microsoft Excel™ and submitted it to ACF, via email. Beginning in 2013, States can complete the current reporting form on the SSBG Portal. The SSBG Portal is a secure web-based data portal. The SSBG Portal allows for more efficient data submission without increasing the overall burden on States. It provides a user-friendly means for States to submit and access their pre-expenditure and post-expenditure and recipient data.

Information collected in the post-expenditure reports submitted by States is analyzed and described in an annual report on SSBG expenditures and recipients produced by the Office of Community Services (OCS), Administration for Children and Families (ACF). The information contained in this report is used for program planning and management. The data establish how SSBG funding is used for the provision of services in each State to each of the many specific populations of vulnerable children and adults.

The data is also analyzed to determine the performance of States' in meeting the SSBG program performance measures developed to meet the requirements of the Government Performance and Results Act of 1993 (GPRA), as amended by the GPRA Modernization Act of 2010.[1] GPRA requires all Federal agencies to develop measurable performance goals.

The SSBG program currently has an administrative costs efficiency measure which is intended to decrease the percentage of SSBG funds identified as administrative costs in the post-expenditure reports.[2] The SSBG program is also implementing a new

[1] Public Law 11–352; 31 U.S.C. 1115(b)(10).

[2] U.S. Department of Health and Human Services, Administration for Children and Families, Office of Community Services. (2007, June). *Implementing a new performance measure to enhance efficiency* (Information Memorandum Transmittal No. 04–2007). Available from *http://archive.acf.hhs.gov/programs/ocs/ssbg/procedures/ssbg_im_04_2007.html.*

performance measure designed to ensure that SSBG funds are spent effectively and efficiently while maintaining the program's intrinsic flexibility as a block grants. The performance measure will assess the degree to which States spend SSBG funds in a manner consistent with their intended use, as required by Federal law.[3] It will be used to determine how well States are doing overall in minimizing variance between projected and actual expenditures of SSBG funds. This program measure will be fully implemented for SSBG program data submitted for fiscal year 2013.

Respondents: The post-expenditure reporting form and intended use plan are completed once annually by a representative of the agency that administers the Social Services Block Grant at the State level in each State. Respondents include the 50 States, the District of Columbia, and Puerto Rico.

ANNUAL BURDEN ESTIMATES

Instrument	Number of respondents *	Number of responses per respondent	Average burden hours per response	Total burden hours
Post-Expenditure Reporting Form	52	1	110	5,720
Use of Post-Expenditure Reporting Form as Part of the Intended Use Plan	52	1	2	104
Estimated Total Annual Burden Hours				5,824

* *Respondents include the 50 States, the District of Columbia, and Puerto Rico.*

Additional Information: Copies of the proposed collection may be obtained by writing to the Administration for Children and Families, Office of Planning, Research and Evaluation, 370 L'Enfant Promenade SW., Washington, DC 20447, Attn: ACF Reports Clearance Officer. All requests should be identified by the title of the information collection. Email address: *infocollection@acf.hhs.gov.*

OMB Comment: OMB is required to make a decision concerning the collection of information between 30 and 60 days after publication of this document in the **Federal Register**. Therefore, a comment is best assured of having its full effect if OMB receives it within 30 days of publication. Written comments and recommendations for the proposed information collection should be sent directly to the following:

Office of Management and Budget, Paperwork Reduction Project, Email: *OIRA_SUBMISSION@OMB.EOP.GOV,* Attn: Desk Officer for the Administration for Children and Families.

Robert Sargis,

Reports Clearance Officer.

[FR Doc. 2014–12688 Filed 5–30–14; 8:45 am]

BILLING CODE 4184–01–P

DEPARTMENT OF HEALTH AND HUMAN SERVICES

Administration for Children and Families

Proposed Information Collection Activity; Comment Request

Proposed Projects:

Title: Head Start Program Information Report.

OMB No.: 0970–0427.

Description: The Office of Head Start within the Administration for Children and Families, United States Department of Health and Human Services, is proposing to renew authority to collect information using the Head Start Program Information Report, monthly enrollments, contacts, locations, and reportable conditions. All information is collected electronically through the Head Start Enterprise System (HSES). The PIR provides information about Head Start and Early Head Start services received by the children and families enrolled in Head Start programs. The information collected in the PIR is used to inform the public about these programs, to make periodic reports to Congress about the status of children in Head Start programs as required by the Head Start Act, and to assist the administration and training/technical assistance of Head Start programs.

Respondents: Head Start and Early Head Start program grant recipients.

ANNUAL BURDEN ESTIMATES

Instrument	No. of respondents	No. of responses per respondent	Average burden hours per response	Total burden hours
Head Start Program Information Report	3,041	1	4	12,164
Grantee Monthly Enrollment Reporting	1,773	12	0.05	1,063.8
Contacts, Locations & Reportable Conditions	3,041	1	0.25	760.25
Estimated Total Annual Burden Hours:				13,988.05

The estimated burden hours was adjusted to anticipate the increase in number of respondents. See Item 15 of the Supporting Statement for more information.

In compliance with the requirements of Section 506(c)(2)(A) of the Paperwork Reduction Act of 1995, the Administration for Children and Families is soliciting public comment on the specific aspects of the information collection described above. Copies of the proposed collection of information can be obtained and comments may be forwarded by writing to the Administration for Children and Families, Office of Planning, Research

[3] 42 U.S.C. 1397e(a); U.S. Department of Health and Human Services, Administration for Children and Families, Office of Community Services. (2012, February). *Implementation of a new performance measure* (Information Memorandum Transmittal No. 01–2012). Available from *http://www.acf.hhs.gov/programs/ocs/resource/implementation-of-a-new-performance-measure.*

and Evaluation, 370 L'Enfant Promenade SW., Washington, DC 20447, Attn: ACF Reports Clearance Officer. Email address: *infocollection@acf.hhs.gov.* All requests should be identified by the title of the information collection.

The Department specifically requests comments on: (a) Whether the proposed collection of information is necessary for the proper performance of the functions of the agency, including whether the information shall have practical utility; (b) the accuracy of the agency's estimate of the burden of the proposed collection of information; (c) the quality, utility, and clarity of the information to be collected; and (d) ways to minimize the burden of the collection of information on respondents, including through the use of automated collection techniques or other forms of information technology. Consideration will be given to comments and suggestions submitted within 60 days of this publication.

Robert Sargis,

Reports Clearance Officer.

[FR Doc. 2014–12695 Filed 5–30–14; 8:45 am]

BILLING CODE 4184–01–P

DEPARTMENT OF HEALTH AND HUMAN SERVICES

Administration for Children and Families

Submission for OMB Review; Comment Request

Title: Federal Case Registry (FCR).

OMB No.: 0970–0421.

Description: States are required to create and update a State Case Registry (SCR) within their statewide automated child support systems, to include information on cases enforced by state child support agencies (IV–D) and cases not enforced by those agencies (non-IV–D), including cases enforced by the courts.

The Federal Case Registry (FCR) consisting of child support orders informs states which other state(s) has information on cases or participants of interest to them. States are required to furnish to the FCR the minimum amount of information on child support cases (including updates to those cases) recorded in the SCR that is necessary to operate the FCR. The information alerts states to other states that have registered the same individual. The FCR automatically provides states with address, employment, and unemployment information to locate these parents and their employers to either establish or enforce a child support order. This information collection pertains to information collected from courts and transmitted to the FCR.

The activities associated with this information collection are authorized by (1) 42 U.S.C. 654a(e)which requires that state child support agencies establish, update, maintain, and monitor an automated state case registry containing records pertaining to cases enforced by the child support agencies and order information pertaining to all cases, including cases not enforced by the child support agencies, using standardized data elements and including payment records; and (2) 42 U.S.C. 654a(f)(1), which requires states to furnish certain state case registry information to the FCR, an automated registry established within the Federal Parent Locator Service, to assist state child support enforcement agencies and for other purposes.

Respondents: State Child Support Agencies and Courts.

ANNUAL BURDEN ESTIMATES

Instrument	Number of respondents	Number of responses per respondent	Average burden hours per response	Total burden hours
Collection of Non-IV–D Data for SCR: Courts	3,144	454	.0205	29,261.21
Collection of Child Data for IV–D Cases for SCR: Courts	3,144	158	.0205	10,183.42
State IV–D Agencies: Manual Entry of Court-Provided Case Information	54	14,253	.033333	25,655.14

Estimated Total Annual Burden Hours: 65,100.

Additional Information

Copies of the proposed collection may be obtained by writing to the Administration for Children and Families, Office of Planning, Research and Evaluation, 370 L'Enfant Promenade SW., Washington, DC 20447, Attn: ACF Reports Clearance Officer. All requests should be identified by the title of the information collection. Email address: *infocollection@acf.hhs.gov.*

OMB Comment

OMB is required to make a decision concerning the collection of information between 30 and 60 days after publication of this document in the **Federal Register**. Therefore, a comment is best assured of having its full effect if OMB receives it within 30 days of publication. Written comments and recommendations for the proposed information collection should be sent directly to the following: Office of Management and Budget, Paperwork Reduction Project, Email: *OIRA_SUBMISSION@OMB.EOP.GOV*, Attn: Desk Officer for the Administration for Children and Families.

Robert Sargis,

Reports Clearance Officer.

[FR Doc. 2014–12656 Filed 5–30–14; 8:45 am]

BILLING CODE 4184–01–P

DEPARTMENT OF HEALTH AND HUMAN SERVICES

National Institutes of Health

National Institute of Dental & Craniofacial Research; Notice of Closed Meetings

Pursuant to section 10(d) of the Federal Advisory Committee Act, as amended (5 U.S.C. App.), notice is hereby given of the following meetings.

The meetings will be closed to the public in accordance with the provisions set forth in sections 552b(c)(4) and 552b(c)(6), Title 5 U.S.C., as amended. The grant applications and the discussions could disclose confidential trade secrets or commercial property such as patentable material, and personal information concerning individuals associated with the grant applications, the disclosure of which would constitute a clearly unwarranted invasion of personal privacy.

Name of Committee: National Institute of Dental and Craniofacial Research Special Emphasis Panel.

Date: June 25, 2014.

Time: 11:30 a.m. to 1:30 p.m.

Agenda: To review and evaluate grant applications.

Place: National Institutes of Health 6706 Democracy Blvd., Bethesda, MD 20892.

Contact Person: Raj K. Krishnaraju, Ph.D., MS, Scientific Review Branch, National Inst of Dental & Craniofacial Research, National Institutes of Health, 6701 Democracy Blvd., Room: 674 (Courier MD 20817), Bethesda,

MD 20892, 301–594–4864, *kkrishna@nidcr.nih.gov.*

Name of Committee: National Institute of Dental and Craniofacial Research Special Emphasis Panel.

Date: June 26, 2014.

Time: 10:00 a.m. to 12:30 p.m.

Agenda: To review and evaluate grant applications.

Place: National Institutes of Health, One Democracy Plaza, 6701 Democracy Boulevard, Bethesda, MD 20892.

Contact Person: Jayalakshmi Raman, Ph.D., Scientific Review Officer, Scientific Review Branch, National Institute of Dental and Craniofacial Research, One Democracy Plaza, Room 670, Bethesda, MD 20892–4878, 301–594–2904, *ramanj@mail.nih.gov.*

(Catalogue of Federal Domestic Assistance Program Nos. 93.121, Oral Diseases and Disorders Research, National Institutes of Health, HHS).

Dated: May 27, 2014.

David Clary,

Program Analyst, Office of Federal Advisory Committee Policy.

[FR Doc. 2014–12660 Filed 5–30–14; 8:45 am]

BILLING CODE 4140–01–P

DEPARTMENT OF HEALTH AND HUMAN SERVICES

National Institutes of Health

National Institute of Arthritis and Musculoskeletal and Skin Diseases; Notice of Closed Meeting

Pursuant to section 10(d) of the Federal Advisory Committee Act, as amended (5 U.S.C. App.), notice is hereby given of the following meeting.

The meeting will be closed to the public in accordance with the provisions set forth in sections 552b(c)(4) and 552b(c)(6), Title 5 U.S.C., as amended. The grant applications and the discussions could disclose confidential trade secrets or commercial property such as patentable material, and personal information concerning individuals associated with the grant applications, the disclosure of which would constitute a clearly unwarranted invasion of personal privacy.

Name of Committee: Arthritis and Musculoskeletal and Skin Diseases Initial Review Group; Arthritis and Musculoskeletal and Skin Diseases Special Grants Review Committee.

Date: June 26–27, 2014.

Time: 7:00 p.m. to 5:00 p.m.

Agenda: To review and evaluate grant applications.

Place: Hilton Garden Inn, 7301 Waverly Street, Bethesda, MD 20814.

Contact Person: Helen Lin, Ph.D., Scientific Review Officer, NIH/NIAMS/RB, 6701 Democracy Blvd., Suite 800, Plaza One, Bethesda, MD 20817, 301–594–4952 *linh1@mail.nih.gov.*

(Catalogue of Federal Domestic Assistance Program Nos. 93.846, Arthritis, Musculoskeletal and Skin Diseases Research, National Institutes of Health, HHS)

Dated: May 28, 2014.

Carolyn Baum,

Program Analyst, Office of Federal Advisory Committee Policy.

[FR Doc. 2014–12659 Filed 5–30–14; 8:45 am]

BILLING CODE 4140–01–P

DEPARTMENT OF HEALTH AND HUMAN SERVICES

National Institutes of Health

National Institute of Diabetes and Digestive and Kidney Diseases; Notice of Closed Meetings

Pursuant to section 10(d) of the Federal Advisory Committee Act, as amended (5 U.S.C. App.), notice is hereby given of the following meetings.

The meetings will be closed to the public in accordance with the provisions set forth in sections 552b(c)(4) and 552b(c)(6), Title 5 U.S.C., as amended. The grant applications and the discussions could disclose confidential trade secrets or commercial property such as patentable material, and personal information concerning individuals associated with the grant applications, the disclosure of which would constitute a clearly unwarranted invasion of personal privacy.

Name of Committee: National Institute of Diabetes and Digestive and Kidney Diseases Special Emphasis Panel; NIDDK Multi-Center Clinical Study in Children with KD—Implementation and Planning Cooperative Agreement-U34.

Date: June 27, 2014.

Time: 2:00 p.m. to 3:30 p.m.

Agenda: To review and evaluate cooperative agreement applications.

Place: National Institutes of Health, Two Democracy Plaza, 6707 Democracy Boulevard, Bethesda, MD 20892, (Telephone Conference Call).

Contact Person: Najma Begum, Ph.D., Scientific Review Officer, Review Branch, DEA, NIDDK, National Institutes Of Health, Room 749, 6707 Democracy Boulevard, Bethesda, MD 20892–5452, (301) 594–8894, *begumn@niddk.nih.gov.*

Name of Committee: National Institute of Diabetes and Digestive and Kidney Diseases Special Emphasis Panel; Pregnancy-Related Weight Gain and Progression to Glucose Intolerance in Midlife.

Date: June 30, 2014.

Time: 1:00 p.m. to 2:00 p.m.

Agenda: To review and evaluate grant applications.

Place: National Institutes of Health, Two Democracy Plaza, 6707 Democracy Boulevard, Bethesda, MD 20892, (Telephone Conference Call).

Contact Person: Paul A. Rushing, Ph.D., Scientific Review Officer, Review Branch, DEA, NIDDK, National Institutes of Health, Room 747, 6707 Democracy Boulevard, Bethesda, MD 20892–5452, (301) 594–8895, *rushingp@extra.niddk.nih.gov.*

Name of Committee: National Institute of Diabetes and Digestive and Kidney Diseases Special Emphasis Panel; Psychosocial Issues and Bariatric Surgery.

Date: July 8, 2014.

Time: 3:30 p.m. to 4:30 p.m.

Agenda: To review and evaluate grant applications.

Place: National Institutes of Health, Two Democracy Plaza, 6707 Democracy Boulevard, Bethesda, MD 20892, (Telephone Conference Call).

Contact Person: Paul A. Rushing, Ph.D., Scientific Review Officer, Review Branch, DEA, NIDDK, National Institutes of Health, Room 747, 6707 Democracy Boulevard, Bethesda, MD 20892–5452, (301) 594–8895, *rushingp@extra.niddk.nih.gov.*

(Catalogue of Federal Domestic Assistance Program Nos. 93.847, Diabetes, Endocrinology and Metabolic Research; 93.848, Digestive Diseases and Nutrition Research; 93.849, Kidney Diseases, Urology and Hematology Research, National Institutes of Health, HHS)

Dated: May 27, 2014.

David Clary,

Program Analyst, Office of Federal Advisory Committee Policy.

[FR Doc. 2014–12661 Filed 5–30–14; 8:45 am]

BILLING CODE 4140–01–P

DEPARTMENT OF HEALTH AND HUMAN SERVICES

National Institutes of Health

National Human Genome Research Institute; Notice of Closed Meeting

Pursuant to section 10(d) of the Federal Advisory Committee Act, as amended (5 U.S.C. App.), notice is hereby given of the following meeting.

The meeting will be closed to the public in accordance with the provisions set forth in sections 552b(c)(4) and 552b(c)(6), Title 5 U.S.C., as amended. The grant applications and the discussions could disclose confidential trade secrets or commercial property such as patentable material, and personal information concerning individuals associated with the grant applications, the disclosure of which would constitute a clearly unwarranted invasion of personal privacy.

Name of Committee: National Human Genome Research Institute Special Emphasis Panel; FunVar (Non-Coding Variation).

Date: July 10, 2014.

Time: 8:00 a.m. to 6:00 p.m.

Agenda: To review and evaluate grant applications.

Place: Residence Inn Bethesda, 7335 Wisconsin Avenue, Bethesda, MD 20814.

Contact Person: Keith McKenney, Ph.D., Scientific Review Officer, National Human

Genome Research Institute, 5635 Fishers Lane, Suite 4076, Bethesda, MD 20814, 301–594–4280, *mckenneyk@mail.nih.gov.*

(Catalogue of Federal Domestic Assistance Program Nos. 93.172, Human Genome Research, National Institutes of Health, HHS)

Dated: May 27, 2014.

David Clary,

Program Analyst, Office of Federal Advisory Committee Policy.

[FR Doc. 2014–12658 Filed 5–30–14; 8:45 am]

BILLING CODE 4140–01–P

DEPARTMENT OF HEALTH AND HUMAN SERVICES

Substance Abuse and Mental Health Services Administration

Agency Information Collection Activities: Proposed Collection; Comment Request

In compliance with Section 3506(c)(2)(A) of the Paperwork Reduction Act of 1995 concerning opportunity for public comment on proposed collections of information, the Substance Abuse and Mental Health Services Administration (SAMHSA) will publish periodic summaries of proposed projects. To request more information on the proposed projects or to obtain a copy of the information collection plans, call the SAMHSA Reports Clearance Officer at (240) 276–1243.

Comments are invited on: (a) Whether the proposed collections of information are necessary for the proper performance of the functions of the agency, including whether the information shall have practical utility; (b) the accuracy of the agency's estimate of the burden of the proposed collection of information; (c) ways to enhance the quality, utility, and clarity of the information to be collected; and (d) ways to minimize the burden of the collection of information on respondents, including through the use of automated collection techniques or other forms of information technology.

Proposed Project: Biannual Infrastructure Development Measures for State Adolescent Treatment Enhancement and Dissemination (SAT–ED) and State Youth Treatment Enhancement and Dissemination (SYT–ED) Programs—NEW

The Substance Abuse and Mental Health Services Administration (SAMHSA), Center for Substance Abuse Treatment has developed a set of infrastructure development measures in which recipients of cooperative agreements will report on various benchmarks on a semi-annual basis. The infrastructure development measures are designed to collect information at the state-level and site-level.

The infrastructure development measures are based on the programmatic requirements conveyed in TI–12–006, Cooperative Agreements for State Adolescent Treatment Enhancement and Dissemination (SAT–ED) and TI–13–014, Cooperative Agreements for State Youth Treatment Enhancement and Dissemination (SYT–ED).

The purpose of this program is to provide funding to States/Territories/Tribes to improve treatment for adolescents and transitional age youth through the development of a learning laboratory with collaborating local community-based treatment provider sites. Through the shared experience between the State/Territory/Tribe and the local community-based treatment provider sites, an evidence-based practice (EBP) will be implemented, youth and families will be provided services, and a feedback loop will be developed to enable the State/Territory/Tribe and the sites to identify barriers and test solutions through a services component operating in real time. The expected outcomes of these cooperative agreements will include needed changes to State/Territorial/Tribal policies and procedures; development of financing structures that work in the current environment; and a blueprint for States/Territories/Tribes and providers that can be used throughout the State/Territory/Tribe to widen the use of effective substance use treatment EBPs. Additionally, adolescents (ages 12 to 18), transitional age youth (ages 18 to 24), and their families/primary caregivers who are provided services through grant funds will inform the process to improve systems issues.

Estimates for response burden were calculated based on the methodology (survey data collection) being used and are based on previous experience collecting similar data and results of the pilot study. For emailed biannual surveys, burden estimates of 12.0 hours were used for Project Directors and/or Program Managers and burden estimates of 7.2 hours were used for other project staff members. It is estimated that 13 Project Directors and/or Program Managers and 26 other staff members from Cohort 1 will respond to the emailed survey biannually (i.e., twice each year) for 3 years at an estimated total burden of 2,059.2 hours for Cohort 1. It is estimated that 10 Project Directors and/or Program Managers and 20 other staff members from Cohort 2 will respond to the emailed survey biannually (i.e., twice each year) for 5 years at an estimated total burden of 2,640 hours for Cohort 2. It is estimated that 12 Project Directors and/or Program Managers and 24 other staff members from Cohort 3 will respond to the emailed survey biannually (i.e., twice each year) for 5 years at an estimated total burden of 3,168 hours for Cohort 2. The burden hours of Cohort 1 (2,059.2 hours), Cohort 2 (2,640 hours) and Cohort 3 (3,168 hours) combined comes to a total estimated burden for the emailed biannual survey of 7,867.2 hours.

ESTIMATES OF ANNUALIZED HOUR BURDEN FOR BIANNUAL INFRASTRUCTURE DEVELOPMENT MEASURE

Respondent type	Number of respondents	Responses per respondent	Total responses	Hours per response	Total annual hour burden
Project Director	35	2	70	12.0	840

Send comments to Summer King, SAMHSA Reports Clearance Officer, Room 2–1057, One Choke Cherry Road, Rockville, MD 20857 or email her a copy at *summer.king@samhsa.hhs.gov.* Written comments should be received by August 1, 2014.

Summer King,

Statistician.

[FR Doc. 2014–12653 Filed 5–30–14; 8:45 am]

BILLING CODE 4162–20–P

DEPARTMENT OF HEALTH AND HUMAN SERVICES

Substance Abuse and Mental Health Services Administration

Agency Information Collection Activities: Proposed Collection; Comment Request

In compliance with Section 3506(c)(2)(A) of the Paperwork Reduction Act of 1995 concerning opportunity for public comment on proposed collections of information, the Substance Abuse and Mental Health Services Administration (SAMHSA) will publish periodic summaries of proposed projects. To request more information on the proposed projects or to obtain a copy of the information collection plans, call the SAMHSA Reports Clearance Officer on (240) 276–1243.

Comments are invited on: (a) Whether the proposed collections of information are necessary for the proper performance of the functions of the agency, including whether the information shall have practical utility; (b) the accuracy of the agency's estimate of the burden of the proposed collection of information; (c) ways to enhance the quality, utility, and clarity of the information to be collected; and (d) ways to minimize the burden of the collection of information on respondents, including through the use of automated collection techniques or other forms of information technology.

Proposed Project: Survey of Current and Alumni SAMHSA Fellows of the Minority Fellowship Program (MFP) (OMMB No. 0930–0304)—REINSTATEMENT

SAMHSA is requesting Office of Management and Budget (OMB) approval for the conduct of surveys of current and Alumni MFP Fellows. This survey would gather information about current and Alumni MFP Fellows that will help SAMHSA meet its responsibilities under the Government Performance and Results Modernization Act for gathering, analyzing, and interpreting information about government-funded programs such as the MFP.

In 1973, in response to a substantial lack of ethnic and racial minorities in the mental health professions, the Center for Minority Health at the National Institute of Mental Health established the Minority Fellowship Program (MFP). Since its move to SAMHSA in 1992, the MFP has continued to facilitate the entry of minority graduate students and psychiatric residents into mental health careers and has increased the number of psychology, psychiatry, nursing, and social work professionals trained to provide mental health and substance abuse services to minority groups. The MFP, in turn, offers sustained grants to six national behavioral health professional associations: The American Association of Marriage and Family Therapy, the American Nurses Association, the American Psychiatric Association, the American Psychological Association, the Council on Social Work Education, and, as of August 2012, the National Board for Certified Counselors and Affiliates. Additional associations, such as the International Certification and Reciprocity Consortium and the National Association for Alcoholism and Drug Abuse Counselors, are expected to join the program later this year. Others may join in future years.

The MFP is supported by funds from all three SAMHSA centers: The Center for Mental Health Services (CMHS), the Center for Substance Abuse Treatment, and the Center for Substance Abuse Prevention. SAMHSA's CMHS has funded the development of the MFP surveys.

To assess the performance of the MFP, SAMHSA is requesting OMB approval for the conducting of a survey of current and Alumni MFP Fellows. This survey would gather information about current and Alumni MFP Fellows that will help SAMHSA meet its responsibilities under the Government Performance and Results Modernization Act for gathering, analyzing, and interpreting information about government-funded programs such as the MFP.

This package requests approval of two survey instruments (to be sent to approximately 1.300 Current and Alumni Fellows with an expected response rate of 788 respondents). Two online (Internet based) surveys (with the option for a hard copy mailed through the U.S. Postal Service) will be used with the following stakeholders in the MFP:

1. *Current SAMHSA MFP Fellows* currently receiving support during their doctoral-level training or psychiatric residency will be asked about their experiences in the MFP (from recruitment into the program through their participation in the various activities provided by the Grantees).

2. *MFP Alumni* who participated in the MFP during the time the program was administered by SAMHSA will be asked about their previous experiences as Fellows in the MFP and also about their subsequent involvement and leadership in their professions.

None of the data collected in the surveys will be redundant with any existing reporting requirements or data sources. Survey data will be obtained to assess the following measures:

1. *Completing the Fellowship Program.* Data on the completion of MFP goals, median and average of time to complete Fellowship goals, and the number of mentors, total mentored hours, and helpfulness of mentorship.

2. *Employment of Past Fellows.* Data on the initial type of employment to include employment in the substance abuse or mental health field in the year after completion of the MFP goals, type of employment situation categories (academia, clinical, etc., by private/public organization), and focus of work on underserved youth and elderly in urban and/or rural settings.

3. *Current Employment Position.* Data on current employment, including employment in the substance abuse or mental health field in the year after completion of the MFP Fellowship goals, type of employment situation categories (academia, clinical, etc., by private/public organization), and focus of work on underserved youth and elderly in urban and/or rural settings.

4. *Improving Skills and Knowledge.* Data on the number of certifications and licensures obtained by Fellows and median and average number of continuing education hours credited.

5. *Number of Contributions to the Field.* Data on the number of presentations at national meetings, professional publications, and national, state, or local honors or citations.

The total annual burden estimate for conducting the surveys is shown below:

Survey name	Number of respondents	Responses per respondent	Total number of responses	Hours per response	Total hours
Current SAMHSA MFP Fellows Survey	128	1	128	0.33	42.24
SAMHSA MFP Alumni Survey	660	1	660	0.67	442.20

Survey name	Number of respondents	Responses per respondent	Total number of responses	Hours per response	Total hours
Totals	788		788		484.44

Send comments to Summer King, SAMHSA Reports Clearance Officer, Room 2–1057, One Choke Cherry Road, Rockville, MD 20857 or email her a copy at *summer.king@samhsa.hhs.gov.* Written comments should be received by August 1, 2014.

Summer King,

Statistician.

[FR Doc. 2014–12652 Filed 5–30–14; 8:45 am]

BILLING CODE 4162–20–P

DEPARTMENT OF HOMELAND SECURITY

U.S. Customs and Border Protection

[1651–0037]

Agency Information Collection Activities: Entry of Articles for Exhibition

AGENCY: U.S. Customs and Border Protection, Department of Homeland Security.

ACTION: 30-Day notice and request for comments; extension of an existing collection of information.

SUMMARY: U.S. Customs and Border Protection (CBP) of the Department of Homeland Security will be submitting the following information collection request to the Office of Management and Budget (OMB) for review and approval in accordance with the Paperwork Reduction Act: Entry of Articles for Exhibition. This is a proposed extension of an information collection that was previously approved. CBP is proposing that this information collection be extended with no change to the burden hours. This document is published to obtain comments from the public and affected agencies.

DATES: Written comments should be received on or before July 2, 2014 to be assured of consideration.

ADDRESSES: Interested persons are invited to submit written comments on this proposed information collection to the Office of Information and Regulatory Affairs, Office of Management and Budget. Comments should be addressed to the OMB Desk Officer for Customs and Border Protection, Department of Homeland Security, and sent via electronic mail to *oira_submission@omb.eop.gov* or faxed to (202) 395–5806.

FOR FURTHER INFORMATION CONTACT: Requests for additional information should be directed to Tracey Denning, U.S. Customs and Border Protection, Regulations and Rulings, Office of International Trade, 90 K Street NE., 10th Floor, Washington, DC 20229–1177, at 202–325–0265.

SUPPLEMENTARY INFORMATION: This proposed information collection was previously published in the **Federal Register** (79 FR 17172) on March 27, 2014, allowing for a 60-day comment period. This notice allows for an additional 30 days for public comments. This process is conducted in accordance with 5 CFR 1320.10. CBP invites the general public and other Federal agencies to comment on proposed and/or continuing information collections pursuant to the Paperwork Reduction Act of 1995 (Public Law 104–13; 44 U.S.C. 3507). The comments should address: (a) Whether the collection of information is necessary for the proper performance of the functions of the agency, including whether the information shall have practical utility; (b) the accuracy of the agency's estimates of the burden of the collection of information; (c) ways to enhance the quality, utility, and clarity of the information to be collected; (d) ways to minimize the burden including the use of automated collection techniques or the use of other forms of information technology; and (e) the annual costs burden to respondents or record keepers from the collection of information (a total capital/startup costs and operations and maintenance costs). The comments that are submitted will be summarized and included in the CBP request for Office of Management and Budget (OMB) approval. All comments will become a matter of public record. In this document, CBP is soliciting comments concerning the following information collection:

Title: Entry of Articles for Exhibition.

OMB Number: 1651–0037.

Abstract: Goods entered for exhibit at fairs, or for constructing, installing, or maintaining foreign exhibits at a fair, may be free of duty under 19 U.S.C. 1752. In order to substantiate that goods qualify for duty-free treatment, the consignee of the merchandise must provide information to CBP about the imported goods, which is specified in 19 CFR 147.11(c).

Current Actions: CBP proposes to extend the expiration date of this information collection with no change to the burden hours or to the information collected.

Type of Review: Extension (without change).

Affected Public: Businesses.

Estimated Number of Respondents: 50.

Estimated Number of Responses per Respondent: 50.

Estimated Number of Total Annual Responses: 2,500.

Estimated Time per Response: 20 minutes.

Estimated Total Annual Burden Hours: 832.

Dated: May 28, 2014.

Tracey Denning,

Agency Clearance Officer, U.S. Customs and Border Protection.

[FR Doc. 2014–12742 Filed 5–30–14; 8:45 am]

BILLING CODE 9111–14–P

DEPARTMENT OF THE INTERIOR

Bureau of Land Management

[LLAK910000.L13100000.DB0000. LXSINSSI0000]

Notice of Public Meeting, North Slope Science Initiative—Science Technical Advisory Panel; Correction

AGENCY: Bureau of Land Management, Alaska State Office, North Slope Science Initiative, Interior.

ACTION: Notice of public meeting; correction.

SUMMARY: In accordance with the Federal Land Policy and Management Act (FLPMA) and the Federal Advisory Committee Act of 1972 (FACA), the U.S. Department of the Interior, North Slope Science Initiative (NSSI)—Science Technical Advisory Panel (STAP) will meet as indicated below.

DATES: The meeting will be held June 12 and 13, 2014 in Fairbanks, Alaska. The meetings will begin at 9:00 a.m. in the Butrovich Building, Room 109 a–b, 910 Yukon Drive, University of Alaska Fairbanks. Public comment will be received between 3:00 and 4:00 p.m. on Thursday, June 12, 2014. The document contained an incorrect point of contact and agenda topics are clarified in the next section.

Correction

In the **Federal Register** of May 19, 2014, in FR Doc. 2014–11474, page 28770 in the third column, the correct point of contact for information is Dennis Lassuy, Designated Federal Official for the STAP. He may be contacted at *dlassuy@blm.gov* or via telephone at 907–271–3212.

The agenda topics to be discussed include continued dialog for prioritizing inventory, monitoring, and research using the North Slope Scenarios Project results for the North Slope and adjacent marine environments. Additionally, the STAP will continue dialog on a long-term monitoring strategy for the North Slope. The STAP will be reviewing the status of the emerging issues first released in October 2010.

Dated: May 27, 2014.

Bud C. Cribley,

State Director.

[FR Doc. 2014–12779 Filed 5–30–14; 8:45 am]

BILLING CODE 1310–JA–P

DEPARTMENT OF THE INTERIOR

Bureau of Land Management

[LLCA942000 L5700 0000 BX0000 12X L5017AR]

Filing of Plats of Survey: California

AGENCY: Bureau of Land Management, Interior.

ACTION: Notice.

SUMMARY: The plats of survey of lands described below are scheduled to be officially filed in the Bureau of Land Management California State Office, Sacramento, California, thirty (30) calendar days from the date of this publication.

ADDRESSES: A copy of the plats may be obtained from the California State Office, Bureau of Land Management, 2800 Cottage Way, Sacramento, California 95825, upon required payment.

Protest: A person or party who wishes to protest a survey must file a notice that they wish to protest with the California State Director, Bureau of Land Management, 2800 Cottage Way, Sacramento, California 95825.

FOR FURTHER INFORMATION CONTACT: Chief, Branch of Geographic Services, Bureau of Land Management, California State Office, 2800 Cottage Way, Room W–1623, Sacramento, California 95825, (916) 978–4310.

SUPPLEMENTARY INFORMATION: These surveys were executed to meet the administrative needs of various federal agencies; the Bureau of Land Management, Bureau of Indian Affairs or Bureau of Reclamation. The lands surveyed are:

Mount Diablo Meridian, California

T. 12 N., R. 12 E., dependent resurvey, subdivision and metes-and-bounds survey accepted February 11, 2014.
T. 31 S., R. 24 E., dependent resurvey and subdivision of sections accepted March 18, 2014.
T. 31 S., R. 23 E., dependent resurvey and subdivision of sections accepted March 20, 2014.
T. 16 N., R. 10 E., dependent resurvey accepted March 27, 2014.
T. 16 N., R. 9 E., dependent resurvey accepted March 27, 2014.
T. 17 N., R. 7 E., dependent resurvey and subdivision of section 24 accepted March 27, 2014.
T. 1 S., Rs. 15 and 16 E., dependent resurvey and subdivision of section 30 accepted March 27, 2014.
T. 16 N., R. 10 E., supplemental plat of the NW 1/4 of section 30 accepted April 2, 2014.
T. 29 N., R. 3 W., dependent resurvey and survey accepted May 19, 2014.
T. 18 N., R. 9 E., dependent resurvey and subdivision of section 32 accepted April 3, 2014.
T. 3 N., R. 14 E., dependent resurvey and subdivision accepted April 17, 2014.

San Bernardino Meridian, California

T. 5 S., R. 13 and 14 W., dependent resurvey and metes-and-bounds survey accepted February 14, 2014.
T. 9 S., R. 13 E., supplemental plats of section 7, section 16, SE 1/4 section 17 and section 36 accepted February 19, 2014.
T. 10 S., R. 14 E., supplemental plats of a portion of section 4, section 5, a portion of section 6, a portion of section 10 and the NE 1/4 section 26 accepted February 20, 2014.
T. 15 S., R. 3 E., dependent resurvey, subdivision and metes-and-bounds survey accepted February 25, 2014.
T. 8 S., R. 12 E., supplemental plats of the SE 1/4 section 6 and the SW 1/4 section 9 accepted March 11, 2014.
T. 13 S., R. 2 E., dependent resurvey and subdivision of section 26 accepted April 3, 2014.
T. 9 S., R. 13 E., supplemental plat of SE 1/4 section 17 accepted April 9, 2014.
T. 10 S., R. 14 E., supplemental plat of a portion of section 10 accepted April 21, 2014.
T. 5 S., R. 12 W., supplemental plat of tract A lot 1 and lot 2 in parcel C–2 accepted May 9, 2014.

Authority: 43 U.S.C., Chapter 3.

Dated: May 20, 2014.

Lance J. Bishop,

Chief Cadastral Surveyor, California.

[FR Doc. 2014–12696 Filed 5–30–14; 8:45 am]

BILLING CODE 4310–40–P

INTERNATIONAL TRADE COMMISSION

[Investigation No. 731–TA–1012 (Second Review)]

Frozen Fish Fillets From Vietnam; Institution of a Five-Year Review

AGENCY: United States International Trade Commission.

ACTION: Notice.

SUMMARY: The Commission hereby gives notice that it has instituted a review pursuant to section 751(c) of the Tariff Act of 1930 (19 U.S.C. 1675(c)) (the Act) to determine whether revocation of the antidumping duty order on frozen fish fillets from Vietnam would be likely to lead to continuation or recurrence of material injury. Pursuant to section 751(c)(2) of the Act, interested parties are requested to respond to this notice by submitting the information specified below to the Commission; [1] to be assured of consideration, the deadline for responses is July 2, 2014. Comments on the adequacy of responses may be filed with the Commission by August 15, 2014. For further information concerning the conduct of this proceeding and rules of general application, consult the Commission's Rules of Practice and Procedure, part 201, subparts A through E (19 CFR part 201), and part 207, subparts A, D, E, and F (19 CFR part 207).

DATES: *Effective Date:* June 2, 2014.

FOR FURTHER INFORMATION CONTACT: Mary Messer (202–205–3193), Office of Investigations, U.S. International Trade Commission, 500 E Street SW., Washington, DC 20436. Hearing-impaired persons can obtain information on this matter by contacting the Commission's TDD terminal on 202–205–1810. Persons with mobility impairments who will need special assistance in gaining access to the Commission should contact the Office of the Secretary at 202–205–2000. General information concerning the Commission may also be obtained by accessing its internet server (*http://www.usitc.gov*). The public record for this proceeding may be viewed on the Commission's electronic docket (EDIS) at *http://edis.usitc.gov.*

[1] No response to this request for information is required if a currently valid Office of Management and Budget (OMB) number is not displayed; the OMB number is 3117–0016/USITC No. 14–5–315, expiration date June 30, 2014. Public reporting burden for the request is estimated to average 15 hours per response. Please send comments regarding the accuracy of this burden estimate to the Office of Investigations, U.S. International Trade Commission, 500 E Street SW., Washington, DC 20436.

SUPPLEMENTARY INFORMATION:

Background.— On August 12, 2003, the Department of Commerce issued an antidumping duty order on imports of certain frozen fish fillets from Vietnam (68 FR 47909). Following the five-year reviews by Commerce and the Commission, effective July 10, 2009, Commerce issued a continuation of the antidumping duty order on imports of frozen fish fillets from Vietnam (74 FR 33208). The Commission is now conducting a second review to determine whether revocation of the order would be likely to lead to continuation or recurrence of material injury to the domestic industry within a reasonably foreseeable time. It will assess the adequacy of interested party responses to this notice of institution to determine whether to conduct a full review or an expedited review. The Commission's determination in any expedited review will be based on the facts available, which may include information provided in response to this notice.

Definitions.—The following definitions apply to this review:

(1) *Subject Merchandise* is the class or kind of merchandise that is within the scope of the five-year review, as defined by the Department of Commerce.

(2) The *Subject Country* in this review is Vietnam.

(3) The *Domestic Like Product* is the domestically produced product or products which are like, or in the absence of like, most similar in characteristics and uses with, the *Subject Merchandise.* In its original determination and its full first five-year review determination, the Commission defined the *Domestic Like Product* as frozen catfish fillets, whether plain, breaded, or marinated.

(4) The *Domestic Industry* is the U.S. producers as a whole of the *Domestic Like Product,* or those producers whose collective output of the *Domestic Like Product* constitutes a major proportion of the total domestic production of the product. In its original determination and its full first five-year review determination, the Commission defined the *Domestic Industry* as processing operations producing frozen catfish fillets (whether plain, breaded, or marinated), not including catfish farming operations.

(5) An *Importer* is any person or firm engaged, either directly or through a parent company or subsidiary, in importing the *Subject Merchandise* into the United States from a foreign manufacturer or through its selling agent.

Participation in the proceeding and public service list.—Persons, including industrial users of the *Subject Merchandise* and, if the merchandise is sold at the retail level, representative consumer organizations, wishing to participate in the proceeding as parties must file an entry of appearance with the Secretary to the Commission, as provided in section 201.11(b)(4) of the Commission's rules, no later than 21 days after publication of this notice in the **Federal Register**. The Secretary will maintain a public service list containing the names and addresses of all persons, or their representatives, who are parties to the proceeding.

Former Commission employees who are seeking to appear in Commission five-year reviews are advised that they may appear in a review even if they participated personally and substantially in the corresponding underlying original investigation or an earlier review of the same underlying investigation. The Commission's designated agency ethics official has advised that a five-year review is not the same particular matter as the underlying original investigation, and a five-year review is not the same particular matter as an earlier review of the same underlying investigation for purposes of 18 U.S.C. 207, the post employment statute for Federal employees, and Commission rule 201.15(b) (19 CFR 201.15(b)), 79 FR 3246 (Jan. 17, 2014), 73 FR 24609 (May 5, 2008). Consequently, former employees are not required to seek Commission approval to appear in a review under Commission rule 19 CFR 201.15, even if the corresponding underlying original investigation or an earlier review of the same underlying investigation was pending when they were Commission employees. For further ethics advice on this matter, contact Carol McCue Verratti, Deputy Agency Ethics Official, at 202–205–3088.

Limited disclosure of business proprietary information (BPI) under an administrative protective order (APO) and APO service list.—Pursuant to section 207.7(a) of the Commission's rules, the Secretary will make BPI submitted in this proceeding available to authorized applicants under the APO issued in the proceeding, provided that the application is made no later than 21 days after publication of this notice in the **Federal Register**. Authorized applicants must represent interested parties, as defined in 19 U.S.C. 1677(9), who are parties to the proceeding. A separate service list will be maintained by the Secretary for those parties authorized to receive BPI under the APO.

Certification.—Pursuant to section 207.3 of the Commission's rules, any person submitting information to the Commission in connection with this proceeding must certify that the information is accurate and complete to the best of the submitter's knowledge. In making the certification, the submitter will be deemed to consent, unless otherwise specified, for the Commission, its employees, and contract personnel to use the information provided in any other reviews or investigations of the same or comparable products which the Commission conducts under Title VII of the Act, or in internal audits and investigations relating to the programs and operations of the Commission pursuant to 5 U.S.C. Appendix 3.

Written submissions.—Pursuant to section 207.61 of the Commission's rules, each interested party response to this notice must provide the information specified below. The deadline for filing such responses is July 2, 2014. Pursuant to section 207.62(b) of the Commission's rules, eligible parties (as specified in Commission rule 207.62(b)(1)) may also file comments concerning the adequacy of responses to the notice of institution and whether the Commission should conduct an expedited or full review. The deadline for filing such comments is August 15, 2014. All written submissions must conform with the provisions of sections 201.8 and 207.3 of the Commission's rules and any submissions that contain BPI must also conform with the requirements of sections 201.6 and 207.7 of the Commission's rules. Please be aware that the Commission's rules with respect to electronic filing have been amended. The amendments took effect on November 7, 2011. See 76 FR 61937 (Oct. 6, 2011) and the newly revised Commission's Handbook on E-Filing, available on the Commission's Web site at *http://edis.usitc.gov.* Also, in accordance with sections 201.16(c) and 207.3 of the Commission's rules, each document filed by a party to the proceeding must be served on all other parties to the proceeding (as identified by either the public or APO service list as appropriate), and a certificate of service must accompany the document (if you are not a party to the proceeding you do not need to serve your response).

Inability to provide requested information.—Pursuant to section 207.61(c) of the Commission's rules, any interested party that cannot furnish the information requested by this notice in the requested form and manner shall notify the Commission at the earliest possible time, provide a full explanation of why it cannot provide the requested information, and indicate alternative forms in which it can provide

equivalent information. If an interested party does not provide this notification (or the Commission finds the explanation provided in the notification inadequate) and fails to provide a complete response to this notice, the Commission may take an adverse inference against the party pursuant to section 776(b) of the Act (19 U.S.C. 1677e(b)) in making its determination in the review.

Information To Be Provided In Response To This Notice Of Institution: As used below, the term ''firm'' includes any related firms.

(1) The name and address of your firm or entity (including World Wide Web address) and name, telephone number, fax number, and Email address of the certifying official.

(2) A statement indicating whether your firm/entity is a U.S. producer of the *Domestic Like Product,* a U.S. union or worker group, a U.S. importer of the *Subject Merchandise,* a foreign producer or exporter of the *Subject Merchandise,* a U.S. or foreign trade or business association, or another interested party (including an explanation). If you are a union/worker group or trade/business association, identify the firms in which your workers are employed or that are members of your association.

(3) A statement indicating whether your firm/entity is willing to participate in this proceeding by providing information requested by the Commission.

(4) A statement of the likely effects of the revocation of the antidumping duty order on the *Domestic Industry* in general and/or your firm/entity specifically. In your response, please discuss the various factors specified in section 752(a) of the Act (19 U.S.C. 1675a(a)) including the likely volume of subject imports, likely price effects of subject imports, and likely impact of imports of *Subject Merchandise* on the *Domestic Industry.*

(5) A list of all known and currently operating U.S. producers of the *Domestic Like Product.* Identify any known related parties and the nature of the relationship as defined in section 771(4)(B) of the Act (19 U.S.C. 1677(4)(B)).

(6) A list of all known and currently operating U.S. importers of the *Subject Merchandise* and producers of the *Subject Merchandise* in the *Subject Country* that currently export or have exported *Subject Merchandise* to the United States or other countries after 2008.

(7) A list of 3–5 leading purchasers in the U.S. market for the *Domestic Like Product* and the *Subject Merchandise* (including street address, World Wide Web address, and the name, telephone number, fax number, and Email address of a responsible official at each firm).

(8) A list of known sources of information on national or regional prices for the *Domestic Like Product* or the *Subject Merchandise* in the U.S. or other markets.

(9) If you are a U.S. producer of the *Domestic Like Product,* provide the following information on your firm's operations on that product during calendar year 2013, except as noted (report quantity data in pounds and value data in U.S. dollars, f.o.b. plant). If you are a union/worker group or trade/business association, provide the information, on an aggregate basis, for the firms in which your workers are employed/that are members of your association.

(a) Production (quantity) and, if known, an estimate of the percentage of total U.S. production of the *Domestic Like Product* accounted for by your firm's(s') production;

(b) Capacity (quantity) of your firm to produce the *Domestic Like Product* (i.e., the level of production that your establishment(s) could reasonably have expected to attain during the year, assuming normal operating conditions (using equipment and machinery in place and ready to operate), normal operating levels (hours per week/weeks per year), time for downtime, maintenance, repair, and cleanup, and a typical or representative product mix);

(c) the quantity and value of U.S. commercial shipments of the *Domestic Like Product* produced in your U.S. plant(s);

(d) the quantity and value of U.S. internal consumption/company transfers of the *Domestic Like Product* produced in your U.S. plant(s); and

(e) the value of (i) net sales, (ii) cost of goods sold (COGS), (iii) gross profit, (iv) selling, general and administrative (SG&A) expenses, and (v) operating income of the *Domestic Like Product* produced in your U.S. plant(s) (include both U.S. and export commercial sales, internal consumption, and company transfers) for your most recently completed fiscal year (identify the date on which your fiscal year ends).

(10) If you are a U.S. importer or a trade/business association of U.S. importers of the *Subject Merchandise* from the *Subject Country,* provide the following information on your firm's(s') operations on that product during calendar year 2013 (report quantity data in pounds and value data in U.S. dollars). If you are a trade/business association, provide the information, on an aggregate basis, for the firms that are members of your association.

(a) The quantity and value (landed, duty-paid but not including antidumping duties) of U.S. imports and, if known, an estimate of the percentage of total U.S. imports of *Subject Merchandise* from the *Subject Country* accounted for by your firm's(s') imports;

(b) the quantity and value (f.o.b. U.S. port, including antidumping duties) of U.S. commercial shipments of *Subject Merchandise* imported from the *Subject Country;* and

(c) the quantity and value (f.o.b. U.S. port, including antidumping duties) of U.S. internal consumption/company transfers of *Subject Merchandise* imported from the *Subject Country.*

(11) If you are a producer, an exporter, or a trade/business association of producers or exporters of the *Subject Merchandise* in the *Subject Country,* provide the following information on your firm's(s') operations on that product during calendar year 2013 (report quantity data in pounds and value data in U.S. dollars, landed and duty-paid at the U.S. port but not including antidumping or countervailing duties). If you are a trade/business association, provide the information, on an aggregate basis, for the firms that are members of your association.

(a) Production (quantity) and, if known, an estimate of the percentage of total production of *Subject Merchandise* in the *Subject Country* accounted for by your firm's(s') production;

(b) Capacity (quantity) of your firm(s) to produce the *Subject Merchandise* in the *Subject Country* (i.e., the level of production that your establishment(s) could reasonably have expected to attain during the year, assuming normal operating conditions (using equipment and machinery in place and ready to operate), normal operating levels (hours per week/weeks per year), time for downtime, maintenance, repair, and cleanup, and a typical or representative product mix); and

(c) the quantity and value of your firm's(s') exports to the United States of *Subject Merchandise* and, if known, an estimate of the percentage of total exports to the United States of *Subject Merchandise* from the *Subject Country* accounted for by your firm's(s') exports.

(12) Identify significant changes, if any, in the supply and demand conditions or business cycle for the *Domestic Like Product* that have occurred in the United States or in the market for the *Subject Merchandise* in the *Subject Country* after 2008, and significant changes, if any, that are likely to occur within a reasonably foreseeable time. Supply conditions to

consider include technology; production methods; development efforts; ability to increase production (including the shift of production facilities used for other products and the use, cost, or availability of major inputs into production); and factors related to the ability to shift supply among different national markets (including barriers to importation in foreign markets or changes in market demand abroad). Demand conditions to consider include end uses and applications; the existence and availability of substitute products; and the level of competition among the *Domestic Like Product* produced in the United States, *Subject Merchandise* produced in the *Subject Country,* and such merchandise from other countries.

(13) (Optional) A statement of whether you agree with the above definitions of the *Domestic Like Product* and *Domestic Industry;* if you disagree with either or both of these definitions, please explain why and provide alternative definitions.

Authority: This proceeding is being conducted under authority of Title VII of the Tariff Act of 1930; this notice is published pursuant to section 207.61 of the Commission's rules.

By order of the Commission.

Issued: May 22, 2014.

Lisa R. Barton,

Secretary to the Commission.

[FR Doc. 2014–12383 Filed 5–30–14; 8:45 am]

BILLING CODE 7020–02–P

DEPARTMENT OF JUSTICE

Notice of Lodging Proposed Consent Decree

In accordance with Departmental Policy, 28 CFR 50.7, notice is hereby given that a proposed Consent Decree in *United States* v. *Richardson M. Roberts and Bucksnort R.R. Ranch, LLC,* Civil Action No. 3:09–812, was lodged with the United States District Court for the Middle District of Tennessee on May 23, 2014.

The proposed Consent Decree concerns an amended complaint filed by the United States against Richardson M. Roberts and Bucksnort R.R. Ranch, LLC, to obtain injunctive relief and civil penalties from the defendants for violating sections 301 and 404 of the Clean Water Act, 33 U.S.C. 1311 and 1344. The proposed Consent Decree resolves these allegations by requiring the defendants to perform restoration work, conserve riparian areas, provide funding to benefit water quality in the Lower Duck River watershed, and pay a civil penalty.

The Department of Justice will accept written comments relating to the proposed Consent Decree for thirty (30) days from the date of publication of this Notice. Please address comments to Andrew J. Doyle, Trial Attorney, United States Department of Justice, Environment and Natural Resources Division, Post Office Box 7611, Washington, DC 20044–7611 and refer to *United States* v. *Richardson M. Roberts and Bucksnort R.R. Ranch, LLC,* DJ #90–5–1–1–18184.

The proposed Consent Decree may be examined at the Clerk's Office, United States District Court for the Middle District of Tennessee, 801 Broadway, Room 800, Nashville, TN 37203. In addition, the proposed Consent Decree may be examined electronically at *http://www.justice.gov/enrd/Consent_Decrees.html.*

Cherie L. Rogers,

Assistant Section Chief, Environmental Defense Section, Environment and Natural Resources Division.

[FR Doc. 2014–12698 Filed 5–30–14; 8:45 am]

BILLING CODE 4410–15–P

NUCLEAR REGULATORY COMMISSION

[NRC–2014–0116]

Reporting of H–3, C–14, Tc–99, and I–129 on the Uniform Waste Manifest

AGENCY: Nuclear Regulatory Commission.

ACTION: Draft regulatory issue summary; request for comment.

SUMMARY: The U.S. Nuclear Regulatory Commission (NRC) is seeking public comment on the draft regulatory issue summary (RIS), which addresses the reporting of H–3, C–14, Tc–99, and I–129 on the uniform waste manifest. The purpose of this draft RIS is to identify instances where licensees may use indirect methods to determine the activity of these radionuclides reported on the uniform manifest when the radionuclide is present at a concentration less than the lower limit of detection (LLD).

DATES: Submit comments by July 2, 2014. Comments received after this date will be considered if it is practical to do so, but the NRC is able to ensure consideration only for comments received before this date.

ADDRESSES: You may submit comments by any of the following methods (unless this document describes a different method for submitting comments on a specific subject):

- Federal Rulemaking Web site: Go to *http://www.regulations.gov* and search for Docket ID NRC–2014–0116. Address questions about NRC dockets to Carol Gallagher; telephone: 301–287–3422; email: *Carol.Gallagher@nrc.gov.* For technical questions, contact the individual listed in the **FOR FURTHER INFORMATION CONTACT** section of this document.
- Mail comments to: Cindy Bladey, Office of Administration, Mail Stop: 3WFN–06–A44M, U.S. Nuclear Regulatory Commission, Washington, DC 20555–0001.

For additional direction on accessing information and submitting comments, see ''Accessing Information and Submitting Comments'' in the **SUPPLEMENTARY INFORMATION** section of this document.

FOR FURTHER INFORMATION CONTACT: Don Lowman, Office of Federal and State Materials and Environmental Management Programs, U.S. Nuclear Regulatory Commission, Washington, DC 20555–0001, telephone: 301–415–5452, email: *Donald.Lowman@nrc.gov.*

SUPPLEMENTARY INFORMATION:

I. Accessing Information and Submitting Comments

A. Accessing Information

Additional background information and supporting documentation for this draft RIS can be found at: *http://www.nrc.gov/waste/llw-disposal/llw-pa/llw-uwm.html.*

Please refer to Docket ID NRC–2014–0116 when contacting the NRC about the availability of information regarding this document. You may access publicly-available information related to this document by any of the following methods:

- Federal Rulemaking Web site: Go to *http://www.regulations.gov* and search for Docket ID NRC–2014–0116.
- NRC's Agencywide Documents Access and Management System (ADAMS): You may access publicly available documents online in the ADAMS Public Documents collection at *http://www.nrc.gov/reading-rm/adams.html.* To begin the search, select ''ADAMS Public Documents'' and then select ''Begin Web-based ADAMS Search.'' For problems with ADAMS, please contact the NRC's Public Document Room (PDR) reference staff at 1–800–397–4209, 301–415–4737, or by email to *pdr.resource@nrc.gov.* The draft RIS, ''Reporting of H–3, C–14, Tc–99, and I–129 on the Uniform Waste Manifest,'' is available in ADAMS under accession number ML14098A283.

• NRC's PDR: You may examine and purchase copies of public documents at the NRC's PDR, Room O1–F21, One White Flint North, 11555 Rockville Pike, Rockville, Maryland 20852.

B. Submitting Comments

Please include Docket ID NRC–2014–0116 in the subject line of your comment submission, in order to ensure that the NRC is able to make your comment submission available to the public in this docket.

The NRC cautions you not to include identifying or contact information that you do not want to be publicly disclosed in your comment submission. The NRC will post all comment submissions at *http://www.regulations.gov* as well as enter the comment submissions into ADAMS. The NRC does not routinely edit comment submissions to remove identifying or contact information.

If you are requesting or aggregating comments from other persons for submission to the NRC, then you should inform those persons not to include identifying or contact information that they do not want to be publicly disclosed in their comment submission. Your request should state that the NRC does not routinely edit comment submissions to remove such information before making the comment submissions available to the public or entering the comment submissions into ADAMS.

II. Discussion

The NRC issues RISs to communicate with stakeholders on a broad range of matters. This may include communicating staff technical positions on matters that have not been communicated to, or are not broadly understood by, the nuclear industry.

The NRC is issuing this draft RIS to inform addressees of the option to use indirect methods to determine the activity of H–3, C–14, Tc–99, and I–129 reported on the uniform waste manifest when the radionuclide is present at a concentration less than the lower limit of detection (LLD). Research indicates that the use of the LLD values as the standard concentration reported on the uniform waste manifest may be resulting in a significant over-estimation of the inventory of these four radionuclides in disposal facilities. Over-estimation of inventory could lead to premature loss of disposal system capacity (e.g., closure of disposal sites), whereas underestimation of inventory could lead to health and safety concerns.

The NRC is requesting public comments on the draft RIS. The NRC staff will make a final determination regarding issuance of the RIS after it considers any public comments received in response to this request.

Dated at Rockville, Maryland, this 23rd day of May 2014.

For the Nuclear Regulatory Commission.

Larry W. Camper,

Director, Division of Waste Management and Environmental Protection, Office of Federal and State Materials and Environmental Management Programs.

[FR Doc. 2014–12720 Filed 5–30–14; 8:45 am]

BILLING CODE 7590–01–P

NUCLEAR REGULATORY COMMISSION

Advisory Committee on Reactor Safeguards; Notice of Meeting

In accordance with the purposes of Sections 29 and 182b of the Atomic Energy Act (42 U.S.C. 2039, 2232b), the Advisory Committee on Reactor Safeguards (ACRS) will hold a meeting on June 11–13, 2014, 11545 Rockville Pike, Rockville, Maryland.

Wednesday, June 11, 2014, Conference Room T–2B1, 11545 Rockville Pike, Rockville, Maryland

8:30 a.m.–8:35 a.m.: Opening Remarks by the ACRS Chairman (Open)—The ACRS Chairman will make opening remarks regarding the conduct of the meeting.

8:35 a.m.–10:30 a.m.: Fuel Cycle Oversight Program Enhancement Project (Open)—The Committee will hear presentations by and hold discussions with representatives of the NRC staff regarding a status of the programs and projects described in SECY–11–0140 that are planned to enhance the Fuel Cycle Oversight Program.

10:45 a.m.–12:45 p.m.: Overview of the SHINE Application for Mo-99 Medical Radioisotope Production Facility (Open/Closed)—The Committee will hear presentations by and hold discussions with representatives of the NRC staff regarding SHINE's Construction Permit Application. [**Note:** A portion of this meeting may be closed in order to discuss and protect information designated as proprietary, pursuant to 5 U.S.C. 552b(c)(4).]

1:45 p.m.–3:15 p.m.: Level 3 PRA Project Plan (Open)—The Committee will hear presentations by and hold discussions with representatives of the NRC staff regarding progress of Level 3 probabilistic risk assessment (PRA) development.

3:30 p.m.–5:30 p.m.: Update and Overview of Regulatory Analysis Guidelines (Open)—The Committee will hear presentations by and hold discussions with representatives of the NRC staff regarding an update and overview of the staff's regulatory analysis guidelines.

5:30 p.m.–6:30 p.m.: Preparation of ACRS Reports (Open)—The Committee will discuss proposed ACRS reports on matters discussed during this meeting.

Thursday, June 12, 2014, Conference Room T–2b1, 11545 Rockville Pike, Rockville, Maryland

8:30 a.m.–10:00 a.m.: Future ACRS Activities/Report of the Planning and Procedures Subcommittee (Open/Closed)—The Committee will discuss the recommendations of the Planning and Procedures Subcommittee regarding items proposed for consideration by the Full

Committee during future ACRS Meetings, and matters related to the conduct of ACRS business, including anticipated workload and member assignments. **Note:** A portion of this meeting may be closed pursuant to 5 U.S.C. 552b (c) (2) and (6) to discuss organizational and personnel matters that relate solely to internal personnel rules and practices of ACRS, and information the release of which would constitute a clearly unwarranted invasion of personal privacy.

10:00 a.m.–10:15 a.m.: Reconciliation of ACRS Comments and Recommendations (Open)—The Committee will discuss the responses from the NRC Executive Director for Operations to comments and recommendations included in recent ACRS reports and letters.

10:30 a.m.–6:00 p.m.: Preparation of ACRS Reports (Open)—The Committee will continue its discussion of proposed ACRS reports on matters discussed during this meeting.

Friday, June 13, 2014, Conference Room T–2b1, 11545 Rockville Pike, Rockville, Maryland

8:30 a.m.–11:30 a.m.: Preparation of ACRS Reports (Open)—The Committee will continue its discussion of proposed ACRS reports on matters discussed during this meeting.

11:30 a.m.–12:00 p.m.: Miscellaneous (Open)—The Committee will continue its discussion of matters related to the conduct of Committee activities and specific issues that were not completed during previous meetings.

Procedures for the conduct of and participation in ACRS meetings were published in the **Federal Register** on November 8, 2013 (78 FR 67205–67206). In accordance with those procedures, oral or written views may be presented by members of the public, including

representatives of the nuclear industry. Persons desiring to make oral statements should notify Quynh Nguyen, Cognizant ACRS Staff (Telephone: 301–415–5844, Email: *Quynh.Nguyen@nrc.gov*), 5 days before the meeting, if possible, so that appropriate arrangements can be made to allow necessary time during the meeting for such statements. In view of the possibility that the schedule for ACRS meetings may be adjusted by the Chairman as necessary to facilitate the conduct of the meeting, persons planning to attend should check with the Cognizant ACRS staff if such rescheduling would result in major inconvenience.

Thirty-five hard copies of each presentation or handout should be provided 30 minutes before the meeting. In addition, one electronic copy of each presentation should be emailed to the Cognizant ACRS Staff one day before meeting. If an electronic copy cannot be provided within this timeframe, presenters should provide the Cognizant ACRS Staff with a CD containing each presentation at least 30 minutes before the meeting.

In accordance with Subsection 10(d) Public Law 92–463, and 5 U.S.C. 552b(c), certain portions of this meeting may be closed, as specifically noted above. Use of still, motion picture, and television cameras during the meeting may be limited to selected portions of the meeting as determined by the Chairman. Electronic recordings will be permitted only during the open portions of the meeting.

ACRS meeting agenda, meeting transcripts, and letter reports are available through the NRC Public Document Room at *pdr.resource@nrc.gov*, or by calling the PDR at 1–800–397–4209, or from the Publicly Available Records System (PARS) component of NRC's document system (ADAMS) which is accessible from the NRC Web site at *http://www.nrc.gov/reading-rm/adams.html* or *http://www.nrc.gov/reading-rm/doc-collections/ACRS/.*

Video teleconferencing service is available for observing open sessions of ACRS meetings. Those wishing to use this service should contact Mr. Theron Brown, ACRS Audio Visual Technician (301–415–8066), between 7:30 a.m. and 3:45 p.m. (ET), at least 10 days before the meeting to ensure the availability of this service. Individuals or organizations requesting this service will be responsible for telephone line charges and for providing the equipment and facilities that they use to establish the video teleconferencing link. The availability of video teleconferencing services is not guaranteed.

Dated: May 27, 2014.

Andrew L. Bates,

Advisory Committee Management Officer.

[FR Doc. 2014–12718 Filed 5–30–14; 8:45 am]

BILLING CODE 7590–01–P

OVERSEAS PRIVATE INVESTMENT CORPORATION

Sunshine Notice—June 4, 2014 Public Hearing

TIME AND DATE: 2 p.m., Thursday, June 5, 2014.

PLACE: Offices of the Corporation, Twelfth Floor Board Room, 1100 New York Avenue NW., Washington, DC.

STATUS: Hearing OPEN to the Public at 2 p.m.

PURPOSE: Public Hearing in conjunction with each meeting of OPIC's Board of Directors, to afford an opportunity for any person to present views regarding the activities of the Corporation.

PROCEDURES: Individuals wishing to address the hearing orally must provide advance notice to OPIC's Corporate Secretary no later than 5 p.m. Tuesday, June 3, 2014. The notice must include the individual's name, title, organization, address, and telephone number, and a concise summary of the subject matter to be presented.

Oral presentations may not exceed ten (10) minutes. The time for individual presentations may be reduced proportionately, if necessary, to afford all participants who have submitted a timely request an opportunity to be heard.

Participants wishing to submit a written statement for the record must submit a copy of such statement to OPIC's Corporate Secretary no later than 5 p.m. Tuesday, June 3, 2014. Such statement must be typewritten, double spaced, and may not exceed twenty-five (25) pages.

Upon receipt of the required notice, OPIC will prepare an agenda, which will be available at the hearing, that identifies speakers, the subject on which each participant will speak, and the time allotted for each presentation.

A written summary of the hearing will be compiled, and such summary will be made available, upon written request to OPIC's Corporate Secretary, at the cost of reproduction.

Written summaries of the projects to be presented at the March 20, 2014 Board meeting will be posted on OPIC's Web site.

CONTACT PERSON FOR INFORMATION: Information on the hearing may be obtained from Connie M. Downs at (202) 336–8438, via facsimile at (202) 408–0297, or via email at *Connie.Downs@opic.gov*.

Dated: May 28, 2014.

Connie M. Downs,

OPIC Corporate Secretary.

[FR Doc. 2014–12763 Filed 5–29–14; 11:15 am]

BILLING CODE 3195–01–P

OVERSEAS PRIVATE INVESTMENT CORPORATION

Sunshine Notice—June 12, 2014 Board of Directors Meeting

TIME AND DATE: Thursday, June 12, 2014, 10:30 a.m. (OPEN Portion)
10:45 a.m. (CLOSED Portion)

PLACE: Offices of the Corporation, Twelfth Floor Board Room, 1100 New York Avenue NW., Washington, DC.

STATUS: Meeting OPEN to the Public from 10:30 a.m. to 10:45 a.m.

Closed portion will commence at 10:45 a.m. (approx.)

MATTERS TO BE CONSIDERED:

1. President's Report.
2. Approval—Amended Audit Committee Charter.
3. Minutes of the Open Session of the March 20, 2014 Board of Directors Meeting.

FURTHER MATTERS TO BE CONSIDERED (Closed to the Public 10:45 a.m.):

1. Finance Project—Nigeria.
2. Finance Project—Colombia.
3. Finance Project—Mexico.
4. Finance Project—Mexico.
5. Finance Project—Turkey.
6. Finance Project—Chile.
7. Finance Project—Pakistan.
8. Finance Project—Panama.
9. Finance Project—Sub-Saharan Africa.
10. Finance Project—Latin/Central America.
11. Finance Project—Brazil.
12. Finance Project—South and Southeast Asia.
13. Finance Project—India.
14. Finance Project—Central and Eastern Europe.
15. Finance Project—Sub-Saharan Africa.
16. Minutes of the Closed Session of the March 20, 2014 Board of Directors Meeting.
17. Reports.
18. Pending Projects.

CONTACT PERSON FOR INFORMATION: Information on the meeting may be obtained from Connie M. Downs at (202) 336–8438.

Dated: May 28, 2014.

Connie M. Downs,

Corporate Secretary, Overseas Private Investment Corporation.

[FR Doc. 2014–12765 Filed 5–29–14; 11:15 am]

BILLING CODE 3195–01–P

PENSION BENEFIT GUARANTY CORPORATION

Proposed Submission of Information Collection for OMB Review; Comment Request; Termination of Single-Employer Plans, Missing Participants

AGENCY: Pension Benefit Guaranty Corporation.

ACTION: Notice of intent to request extension of OMB approval.

SUMMARY: Pension Benefit Guaranty Corporation (''PBGC'') intends to request that the Office of Management and Budget (''OMB'') extend approval (with modifications), under the Paperwork Reduction Act of 1995, of a collection of information in its regulations on Termination of Single-Employer Plans and Missing Participants, and implementing forms and instructions (OMB control number 1212–0036; expires February 28, 2017). This notice informs the public of PBGC's intent and solicits public comment on the collection of information. The modifications relate only to standard terminations and distress terminations that close out in the private sector.

DATES: Comments should be submitted by August 1, 2014.

ADDRESSES: Comments may be submitted by any of the following methods:

- Federal eRulemaking Portal: *http://www.regulations.gov.* Follow the Web site instructions for submitting comments.
- Email: *paperwork.comments@pbgc.gov.*
- Fax: 202–326–4224.
- Mail or Hand Delivery: Legislative and Regulatory Department, Pension Benefit Guaranty Corporation, 1200 K Street NW., Washington, DC 20005–4026.

PBGC will make all comments available on its Web site at *www.pbgc.gov.*

Copies of the collection of information may be obtained without charge by writing to the Disclosure Division of the Office of the General Counsel of PBGC at the above address or by visiting that office or calling 202–326–4040 during normal business hours. (TTY and TDD users may call the Federal relay service toll-free at 1–800–877–8339 and ask to be connected to 202–326–4040.) The regulations and forms and instructions relating to this collection of information are available on PBGC's Web site at *www.pbgc.gov.*

FOR FURTHER INFORMATION CONTACT: Jo Amato Burns, Attorney, or Catherine B. Klion, Assistant General Counsel, Office of the General Counsel, Pension Benefit Guaranty Corporation, 1200 K Street NW., Washington, DC 20005–4026, 202–326–4024. (For TTY and TDD, call 800–877–8339 and ask to be connected to 202–326–4024.)

SUPPLEMENTARY INFORMATION: Under section 4041 of the Employee Retirement Income Security Act of 1974, as amended, a single-employer pension plan may terminate voluntarily only if it satisfies the requirements for either a standard or a distress termination. Pursuant to ERISA section 4041(b), for standard terminations, and section 4041(c), for distress terminations, and PBGC's termination regulation (29 CFR part 4041), a plan administrator wishing to terminate a plan is required to submit specified information to PBGC in support of the proposed termination and to provide specified information regarding the proposed termination to third parties (participants, beneficiaries, alternate payees, and employee organizations). In the case of a plan with participants or beneficiaries who cannot be located when their benefits are to be distributed, the plan administrator is subject to the requirements of ERISA section 4050 and PBGC's regulation on missing participants (29 CFR part 4050). These regulations may be found on PBGC's Web site at *http://www.pbgc.gov/res/laws-and-regulations/code-of-federal-regulations.html.*

The collection of information under these regulations and the implementing forms and instructions has been approved by OMB under control number 1212–0036 (expires February 28, 2017). PBGC is requesting that OMB extend its approval for three years, with modifications. An agency may not conduct or sponsor, and a person is not required to respond to, a collection of information unless it displays a currently valid OMB control number.

PBGC is proposing to require that the plan administrator of a plan terminating in a standard termination (or a distress termination that closes out in the private sector) must submit with the post-distribution certification (Form 501 or Form 602) the most recent plan document and proof of benefit distributions. PBGC is proposing this new information requirement to help address inquiries from individuals who claim they are owed benefits from terminated plans.

PBGC receives approximately 2,500 inquiries a year from individuals seeking pension benefits; 800–850 of these inquiries involve standard terminations. These inquiries often result from an individual receiving a notice from the Social Security Administration that he or she may be owed a benefit from a plan. PBGC typically does not have the information to easily determine (or determine at all) whether the individual was owed a benefit from a terminated plan (and if so, the benefit amount) and whether the benefit was already paid in connection with the plan termination, and the plan's sponsor may no longer exist to assist PBGC. This new information requirement would help PBGC address these inquiries and, where appropriate, pay benefits to individuals entitled to them.

Many plans already submit plan documents and proof of benefit distributions to PBGC in the course of a standard termination audit. PBGC audits all standard terminations of plans with more than 300 participants and a random sample of smaller plans. For plans with a participant count of 300 or fewer, PBGC randomly selects plans to audit. PBGC also may audit a plan when there is reason to believe there may be a problem (for example, when PBGC receives a complaint by plan participants or a plan practitioner).[1] Thus for many plans, the new information requirement would simply shift the requirement to provide the information to an earlier date. In any case, plan administrators would simply be sending PBGC copies of documents that are already in their possession, and the additional burden would be small.

PBGC estimates that 1,430 plan administrators will be subject to the collection of information requirements in PBGC's regulations on termination and missing participants and implementing forms and instructions each year, and that the total annual burden of complying with these requirements will be 1,706 hours and $2,830,000. (Much of the work associated with terminating a plan is performed for purposes other than meeting these requirements.)

PBGC is soliciting public comments to—

- Evaluate whether the collection of information is necessary for the proper performance of the functions of the agency, including whether the information will have practical utility;

[1] *http://www.pbgc.gov/prac/terminations/standard-terminations.html.*

- Evaluate the accuracy of the agency's estimate of the burden of the collection of information, including the validity of the methodology and assumptions used;
- Enhance the quality, utility, and clarity of the information to be collected; and
- Minimize the burden of the collection of information on those who are to respond, including the use of appropriate automated, electronic, mechanical, or other technological collection techniques or other forms of information technology, e.g., permitting electronic submission of responses.

Issued in Washington, DC, this 28th day of May 2014.

Judith Starr,

General Counsel, Pension Benefit Guaranty Corporation.

[FR Doc. 2014–12705 Filed 5–30–14; 8:45 am]

BILLING CODE 7709–02–P

POSTAL REGULATORY COMMISSION

Sunshine Act Meetings

TIME AND DATE: Wednesday, June 18, 2014, at 11 a.m.

PLACE: Commission hearing room, 901 New York Avenue NW., Suite 200, Washington, DC 20268–0001.

STATUS: The Postal Regulatory Commission will hold a public meeting to discuss the agenda items outlined below. Part of the meeting will be open to the public as well as audiocast, and the audiocast may be accessed via the Commission's Web site at *http://www.prc.gov*. Part of the meeting will be closed. After the close of the public part of the meeting, a *public listening session* will be offered to allow the public to comment on any agenda item or related subject matter. The Commission will then resume in its closed session.

MATTERS TO BE CONSIDERED: The agenda for the Commission's June 18, 2014 meeting includes the items identified below.

PORTIONS OPEN TO THE PUBLIC: 1. Report from the Office of Public Affairs and Government Relations on legislative activities and the handling of rate and service inquiries from the public.

2. Report from the Office of General Counsel on the status of Commission dockets.

3. Report from the Office of Accountability and Compliance.

4. Report on international activities of the Commission.

5. Report from the Office of the Secretary and Administration.

6. Presentation to Commissioners on the Postal Service's Sustainability Program by a representative of the Postal Service.

PORTIONS CLOSED TO THE PUBLIC: 7. Discussion of pending litigation.

CONTACT PERSON FOR MORE INFORMATION: David A. Trissell, General Counsel, Postal Regulatory Commission, 901 New York Avenue NW., Suite 200, Washington, DC 20268–0001, at 202–789–6820 (for agenda-related inquiries) and Shoshana M. Grove, Secretary of the Commission, at 202–789–6800 or *shoshana.grove@prc.gov* (for inquiries related to meeting location, changes in date or time of the meeting, access for handicapped or disabled persons, the audiocast, or similar matters). The Commission's Web site may also provide information on changes in the date or time of the meeting.

By direction of the Commission.

Shoshana M. Grove,

Secretary.

[FR Doc. 2014–12831 Filed 5–29–14; 4:15 pm]

BILLING CODE 7710–FW–P

POSTAL REGULATORY COMMISSION

[Docket No. CP2014–51; Order No. 2082]

New Postal Product

AGENCY: Postal Regulatory Commission.

ACTION: Notice.

SUMMARY: The Commission is noticing a recent Postal Service filing requesting the addition of a Global Reseller Expedited Package Contracts 2 negotiated service agreement. This notice informs the public of the filing, invites public comment, and takes other administrative steps.

DATES: *Comments are due:* June 3, 2014.

ADDRESSES: Submit comments electronically via the Commission's Filing Online system at *http://www.prc.gov.* Those who cannot submit comments electronically should contact the person identified in the **FOR FURTHER INFORMATION CONTACT** section by telephone for advice on filing alternatives.

FOR FURTHER INFORMATION CONTACT: David A. Trissell, General Counsel, at 202–789–6820.

SUPPLEMENTARY INFORMATION:

Table of Contents

I. Introduction
II. Notice of Commission Action
III. Ordering Paragraphs

I. Introduction

On May 23, 2014, the Postal Service filed notice that it has entered into an additional Global Reseller Expedited Package Contracts 2 negotiated service agreement (Agreement).[1]

To support its Notice, the Postal Service filed a copy of the Agreement, a copy of the Governors' Decision authorizing the product, a certification of compliance with 39 U.S.C. 3633(a), and an application for non-public treatment of certain materials. It also filed supporting financial workpapers.

II. Notice of Commission Action

The Commission establishes Docket No. CP2014–51 for consideration of matters raised by the Notice.

The Commission invites comments on whether the Postal Service's filing is consistent with 39 U.S.C. 3632, 3633, or 3642, 39 CFR part 3015, and 39 CFR part 3020, subpart B. Comments are due no later than June 3, 2014. The public portions of the filing can be accessed via the Commission's Web site (*http://www.prc.gov*).

The Commission appoints Pamela A. Thompson to serve as Public Representative in this docket.

III. Ordering Paragraphs

It is ordered:

1. The Commission establishes Docket No. CP2014–51 for consideration of the matters raised by the Postal Service's Notice.

2. Pursuant to 39 U.S.C. 505, Pamela A. Thompson is appointed to serve as an officer of the Commission to represent the interests of the general public in this proceeding (Public Representative).

3. Comments are due no later than June 3, 2014.

4. The Secretary shall arrange for publication of this Order in the **Federal Register**.

By the Commission.

Shoshana M. Grove,

Secretary.

[FR Doc. 2014–12634 Filed 5–30–14; 8:45 am]

BILLING CODE 7710–FW–P

[1] Notice of United States Postal Service of Filing a Functionally Equivalent Global Reseller Expedited Package 2 Negotiated Service Agreement, May 23, 2014 (Notice).

SECURITIES AND EXCHANGE COMMISSION

[Release No. 34–72193; File No. SR–FINRA–2014–006]

Self-Regulatory Organizations; Financial Industry Regulatory Authority, Inc.; Order Instituting Proceedings To Determine Whether To Approve or Disapprove a Proposed Rule Change Relating to Per Share Estimated Valuations for Unlisted DPP and REIT Securities

May 20, 2014.

Correction

In notice document 2014–12072 appearing on pages 30217–30219 in the issue of May 27, 2014 make the following correction:

On page 30219, in the first column, in the first and second line from the bottom, ''July 11, 2014'' should read ''June 26, 2014''.

[FR Doc. C1–2014–12072 Filed 5–30–14; 8:45 am]

BILLING CODE 1505–01–D

SECURITIES AND EXCHANGE COMMISSION

[Release No. 34–72253; File No. SR–NYSE–2014–26]

Self-Regulatory Organizations; New York Stock Exchange LLC; Notice of Filing and Immediate Effectiveness of Proposed Rule Change Amending NYSE Rule 13 to Introduce a New ''Retail'' Modifier for Orders and to Make Related, Administrative Changes to Its Price List

May 27, 2014.

Pursuant to Section 19(b)(1) [1] of the Securities Exchange Act of 1934 (''Act'') [2] and Rule 19b–4 thereunder,[3] notice is hereby given that, on May 13, 2014, New York Stock Exchange LLC (''NYSE'' or ''Exchange'') filed with the Securities and Exchange Commission (''Commission'') the proposed rule change as described in Items I and II below, which Items have been prepared by the self-regulatory organization. The Commission is publishing this notice to solicit comments on the proposed rule change from interested persons.

I. Self-Regulatory Organization's Statement of the Terms of Substance of the Proposed Rule Change

In its filing with the Commission, the self-regulatory organization included statements concerning the purpose of, and basis for, the proposed rule change and discussed any comments it received on the proposed rule change. The text of those statements may be examined at the places specified in Item IV below. The Exchange has prepared summaries, set forth in sections A, B, and C below, of the most significant parts of such statements.

II. Self-Regulatory Organization's Statement of the Purpose of, and the Statutory Basis for, the Proposed Rule Change

In its filing with the Commission, the self-regulatory organization included statements concerning the purpose of, and basis for, the proposed rule change and discussed any comments it received on the proposed rule change. The text of those statements may be examined at the places specified in Item IV below. The Exchange has prepared summaries, set forth in sections A, B, and C below, of the most significant parts of such statements.

A. Self-Regulatory Organization's Statement of the Purpose of, and the Statutory Basis for, the Proposed Rule Change

1. Purpose

The Exchange proposes to amend NYSE Rule 13 to introduce a new ''retail'' modifier for orders. The Exchange also proposes to make related, administrative changes to its Price List that would not impact transaction pricing on the Exchange.

An order designated with a ''retail'' modifier would be an agency order or a riskless principal order that meets the criteria of Financial Industry Regulatory Authority, Inc. (''FINRA'') Rule 5320.03 that originates from a natural person and is submitted to the Exchange by a member organization, provided that no change is made to the terms of the order with respect to price or side of market and the order does not originate from a trading algorithm or any other computerized methodology.[4] An order with a ''retail'' modifier would be separate and distinct from a ''Retail Order'' within the Retail Liquidity Program under Rule 107C, despite the characteristics being substantially the same.[5]

The Exchange has separately proposed transaction pricing related to orders designated as ''retail'' that add liquidity to the Book.[6] A member organization that wishes to be eligible for such proposed pricing would be required to designate its orders as ''retail,'' as described herein.[7] However, a member or member organization that does not wish to be eligible for the proposed pricing would be free to choose not to designate orders as ''retail.'' Both the proposed ''retail'' modifier and the existing ''Retail Order'' within the Retail Liquidity Program, along with pricing related to each, are designed to incentivize the submission of additional retail order flow to a public market, like the Exchange. A ''Retail Order'' is eligible for a credit for removing existing, price-improved liquidity from the Exchange. In contrast, an order designated with the proposed ''retail'' modifier would be eligible for a credit for adding liquidity to the Exchange.

A member organization would be required to designate an order as

[1] 15 U.S.C.78s(b)(1).

[2] 15 U.S.C. 78a.

[3] 17 CFR 240.19b–4.

[4] *See* paragraph (a) of the proposed ''retail'' modifier text under Rule 13, which, except for the non-applicability of the Retail Member Organization (''RMO'') aspect, would be the same as the definition of ''Retail Order'' for the Retail Liquidity Program under Rule 107C(a)(3).

[5] The Exchange currently operates the Retail Liquidity Program as a pilot program that is designed to attract additional retail order flow to the Exchange for NYSE-listed securities while also providing the potential for price improvement to such order flow. *See* Securities Exchange Act Release No. 67347 (July 3, 2012), 77 FR 40673 (July 10, 2012) (SR–NYSE–2011–55). Retail order flow is submitted by an RMO through the Retail Liquidity Program as a distinct order type called a ''Retail Order,'' which is defined in Rule 107C(a)(3) in the same manner as the requirements under paragraph (a) of the proposed ''retail'' modifier text. RMO is defined in Rule 107C(a)(2) as a member organization (or a division thereof) that has been approved by the Exchange under Rule 107C to submit Retail Orders. A Retail Order is an Immediate or Cancel Order. *See* Rule 107C(a)(3). *See also* Rule 107C(k) for a description of the manner in which a member or member organization may designate how a Retail Order will interact with available contra-side interest. An execution of a ''Retail Order'' is always considered to remove liquidity, whether against contra-side interest in the Retail Liquidity Program or against the Book. The proposed ''retail'' modifier is designed to identify retail order flow that adds liquidity to the Exchange.

[6] *See* Securities Exchange Act Release No. 71879 (April 4, 2014), 79 FR 19947 (April 10, 2014) (SR–NYSE–2014–15). Specifically, a credit of $0.0030 per share would be available for executions of orders designated as ''retail'' that add liquidity on the Book. Existing rates in the Price List would apply to executions of Mid-Point Passive Liquidity (''MPL'') Orders (e.g., $0.0015 per share). Similarly, the existing rates in the Price List would apply to executions of Non-Displayed Reserve Orders (e.g., $0.0010 per share). A Supplemental Liquidity Provider (''SLP'') market maker (''SLMM'') could designate orders as ''retail'' and be eligible for the proposed new credit. Orders designated as ''retail'' that add liquidity would count toward a member's or member organization's overall level of providing volume for purposes of other pricing on the Exchange that is based on such levels (e.g., the Tier 1, Tier 2 and Tier 3 Adding Credits).

[7] The Price List currently includes references to Rule 107C with respect to the pricing applicable to orders designated as ''retail.'' The Exchange proposes to replace those references with references to the proposed ''retail'' modifier under Rule 13. These proposed changes would merely be administrative and would not impact transaction pricing on the Exchange.

''retail'' in a form and/or manner prescribed by the Exchange.[8] Currently, a member organization may designate an order as ''retail'' either by means of a specific tag in the order entry message, as with other order modifiers, or alternatively by designating a particular member or member organization mnemonic used at the Exchange as a ''retail mnemonic.''[9] To submit a ''retail'' order, a member organization must also submit an attestation, in a form prescribed by the Exchange, that substantially all orders submitted as ''retail'' will qualify as such.[10]

A member organization must have written policies and procedures reasonably designed to assure that it will only designate orders as ''retail'' if all requirements are met.[11] Such written policies and procedures must require the member organization to (i) exercise due diligence before entering a ''retail'' order to assure that entry as a ''retail'' order is in compliance with the applicable requirements, and (ii) monitor whether orders entered as ''retail'' orders meet the applicable requirements. If a member organization represents ''retail'' orders from another broker-dealer customer, the member organization's supervisory procedures must be reasonably designed to assure that the orders it receives from such broker-dealer customer that it designates as ''retail'' orders meet the definition of a ''retail'' order. The member organization must (i) obtain an annual written representation, in a form acceptable to the Exchange, from each broker-dealer customer that sends it orders to be designated as ''retail'' orders that entry of such orders as ''retail'' orders will be in compliance with the applicable requirements; and (ii) monitor whether its broker-dealer customer's ''retail'' order flow meets the applicable requirements.

If a member organization designates orders submitted to the Exchange as ''retail'' orders and the Exchange determines, in its sole discretion, that such orders fail to meet any of the applicable requirements, the Exchange may disqualify a member organization from submitting ''retail'' orders.[12] This could occur, for example, if a member organization (i) designates greater than a de minimis quantity of orders to the Exchange as ''retail'' that fail to meet any of the applicable requirements, (ii) fails to make the required attestation to the Exchange, or (iii) fails to maintain the required policies and procedures. The Exchange would determine if and when a member organization is disqualified from submitting ''retail'' orders and, when disqualification determinations are made, the Exchange would provide a written disqualification notice to the member organization.[13] A member organization that is disqualified may (A) appeal such disqualification, as provided below, and/or (B) resubmit the attestation described above 90 days after the date of the disqualification notice from the Exchange.[14]

If a member organization disputes the Exchange's decision to disqualify it from submitting ''retail'' orders, the member organization may request, within five business days after notice of the decision is issued by the Exchange, that the ''retail'' order ''Hearing Panel'' review the decision to determine if it was correct.[15] The Hearing Panel would consist of the Exchange's Chief Regulatory Officer (''CRO''), or a designee of the CRO, and two officers of the Exchange designated by the Chief Executive Officer of IntercontinentalExchange Group, Inc. (''ICE Group'').[16] The Hearing Panel would review the facts and render a decision within the time frame prescribed by the Exchange.[17] The Hearing Panel may overturn or modify an action taken by the Exchange, and a determination by the Hearing Panel would constitute final action by the Exchange.[18]

The proposed change is not otherwise intended to address any other issues, and the Exchange is not aware of any problems that members and member organizations would have in complying with the proposed change.

2. *Statutory Basis*

The Exchange believes that the proposed rule change is consistent with Section 6(b) of the Act,[19] in general, and furthers the objectives of Sections6(b)(5) of the Act,[20] in particular, because it is designed to prevent fraudulent and manipulative acts and practices, to promote just and equitable principles of trade, to foster cooperation and coordination with persons engaged in regulating, clearing, settling, processing information with respect to, and facilitating transactions in securities, to remove impediments to, and perfect the mechanisms of, a free and open market and a national market system and, in general, to protect investors and the public interest and because it is not designed to permit unfair discrimination between customers, issuers, brokers, or dealers.

The Exchange believes that the proposed change is consistent with these principles because it would increase competition among execution venues and encourage additional liquidity by creating a process, and related transaction pricing pursuant to a separate proposal,[21] that would incentivize the submission of additional retail order flow to a public market. The Exchange notes that a significant percentage of the orders of individual investors are executed over-the-

[8] *See* paragraph (b) of the proposed ''retail'' modifier text under Rule 13.

[9] This would be similar to the manner in which an Exchange Trading Permit (''ETP'') Holder on NYSE Arca Equities, Inc. (''NYSE Arca Equities'') may designate orders as ''retail'' outside of the NYSE Arca Equities Retail Liquidity Program. *See, e.g.,* Securities Exchange Act Release No. 68322 (November 29, 2012), 77 FR 72425 (December 5, 2012) (SR–NYSEArca–2012–129).

[10] *See* paragraph (c) of the proposed ''retail'' modifier text under Rule 13, which would be the same as the attestation requirement for the Retail Liquidity Program under Rule 107C(b)(2)(C).

[11] *See* paragraph (d) of the proposed ''retail'' modifier text under Rule 13, which would be the same as the policies and procedures requirement for the Retail Liquidity Program under Rule 107C(b)(6).

[12] *See* paragraph (e)(1) of the proposed ''retail'' modifier text under Rule 13, which would be substantially the same as the provision for the Retail Liquidity Program under Rule 107C(h)(1).

[13] *See* paragraph (e)(2) of the proposed ''retail'' modifier text under Rule 13, which would be substantially the same as the provision for the Retail Liquidity Program under Rule 107C(h)(2).

[14] *See* paragraph (e)(3) of the proposed ''retail'' modifier text under Rule 13, which would be substantially the same as the provision for the Retail Liquidity Program under Rule 107C(h)(3). Rule 107C(h)(3) currently refers to ''reapplication,'' which relates to the RMO status within the Retail Liquidity Program, but which would not be applicable to designating orders as ''retail.''

[15] *See* paragraph (f)(1) of the proposed ''retail'' modifier text under Rule 13, which would be substantially the same as the provision for the Retail Liquidity Program under Rule 107C(i)(1).

[16] *See* paragraph (f)(2) of the proposed ''retail'' modifier text under Rule 13, which would be substantially the same as the provision for the Retail Liquidity Program under Rule 107C(i)(2). Rule 107C(i)(2) currently refers to the ''Co-Head of U.S. Listings and Cash Execution,'' which is a legacy title that predates the corporation transaction involving NYSE Euronext (''NYSE Euronext'') and IntercontinentalExchange, Inc. (''ICE''). *See* Securities Exchange Act Release No. 70210 (August 15, 2013), 78 FR 51758 (August 21, 2013) (SR–NYSE–2013–42; SR–NYSEMKT–2013–50; SR–NYSEArca–2013–62) (Order Granting Approval of Proposed Rule Change Relating to a Corporate Transaction in Which NYSE Euronext Will Become a Wholly-Owned Subsidiary of IntercontinentalExchange Group, Inc.). The Exchange anticipates updating the existing reference in Rule 107C(i)(2) to the ''Co-Head of U.S. Listings and Cash Execution'' in a separate proposed rule change so that it similarly references the ''Chief Executive Officer of ICE Group,'' as is proposed herein.

[17] *See* paragraph (f)(3) of the proposed ''retail'' modifier text under Rule 13, which would be the same as the provision for the Retail Liquidity Program under Rule 107C(i)(3).

[18] *See* paragraph (f)(4) of the proposed ''retail'' modifier text under Rule 13, which would be the same as the provision for the Retail Liquidity Program under Rule 107C(i)(4).

[19] 15 U.S.C. 78f(b).

[20] 15 U.S.C. 78f(b)(5).

[21] *See* SR–NYSE–2014–15, *supra* note 6.

counter.[22] The Exchange believes that it is appropriate to create a process to bring additional retail order flow to a public market and that such a process would contribute to perfecting the mechanisms of a free and open market and a national market system.

The Exchange understands that Section 6(b)(5) of the Act prohibits an exchange from establishing rules that treat market participants in an unfairly discriminatory manner. However, Section 6(b)(5) of the Act does not prohibit exchange members or other broker-dealers from discriminating, so long as their activities are otherwise consistent with the federal securities laws. While the Exchange believes that markets and price discovery optimally function through the interactions of diverse flow types, it also believes that growth in internalization has required differentiation of retail order flow from other order flow types. The differentiation proposed herein by the Exchange is not designed to permit unfair discrimination, but instead to promote a competitive process around retail executions. The Exchange operating a process like the one proposed herein on an exchange market would result in greater transparency and competitiveness surrounding executions of retail flow.

The Exchange believes that the proposed change is designed to prevent fraudulent and manipulative acts and practices and to promote just and equitable principles of trade because it would contribute to maintaining or increasing the proportion of retail flow in exchange-listed securities that are executed on a registered national securities exchange (rather than relying on certain available off-exchange execution methods). The proposed change also would protect investors and the public interest because it would contribute to investors' confidence in the fairness of their transactions and because it would benefit all investors by deepening the Exchange's liquidity pool, supporting the quality of price discovery, promoting market transparency and improving investor protection.

The Exchange also believes that the proposed change would remove impediments to, and perfect the mechanisms of, a free and open market and a national market system because it would be similar to the manner in which The Nasdaq Stock Market, LLC (''NASDAQ'') provides a process for ''Designated Retail Orders'' that provide liquidity.[23]

Orders designated as ''retail'' would increase the pool of robust liquidity available on the Exchange, thereby contributing to the quality of the Exchange's market and to the Exchange's status as a premier destination for liquidity and order execution. The Exchange believes that, because retail flow is likely to reflect long-term investment intentions, it promotes price discovery and dampens volatility. Accordingly, the presence of retail flow on the Exchange has the potential to benefit all market participants. For this reason, the Exchange believes that encouraging greater retail participation on the Exchange would facilitate transactions in securities while also protecting investors and the public interest.

The Exchange believes that the process for designating orders as ''retail'' and the requirements surrounding such designations, such as attestations and procedures, are consistent with the Act because they would reasonably ensure that substantially all of those orders would satisfy the applicable requirements. These processes and requirements are also consistent with the Act because they are substantially similar to those in effect on the Exchange for the Retail Liquidity Program and on NYSE Arca Equities related to pricing for certain retail flow.[24] More specifically, the Exchange understands that some members and member organizations represent both retail flow as well as other agency and riskless principal flow that may not meet the strict requirements proposed herein. The Exchange further understands that limitations in order management systems and routing networks used by such members and member organizations may make it infeasible for them to isolate 100% of retail flow from other agency or riskless principal, non-retail flow that they would direct to the Exchange. Unable to make the categorical attestation required by the Exchange, some members and member organizations may not attempt to utilize the proposed new modifier, notwithstanding that they have substantial retail flow. The Exchange believes that it is consistent with the Act to permit a de minimis amount of orders to be designated as ''retail,'' despite not satisfying the applicable requirements, because it would allow for enough flexibility to accommodate member and member organization system limitations while still reasonably ensuring that no more than a de minimis amount of orders submitted to the Exchange would not satisfy the applicable requirements. This is also consistent with the Act because it will reasonably ensure that similarly situated members and member organizations that have only slight differences in the capability of their systems would be able to equally utilize the modifier for orders designated as ''retail.''

The Price List currently includes references to Rule 107C with respect to the pricing applicable to orders designated as ''retail.'' The Exchange believes that it is consistent with the Act to replace those references with references to the proposed ''retail'' modifier under Rule 13 because this would avoid potential confusion between orders designated as ''retail'' outside of the Retail Liquidity Program and ''Retail Orders'' within the Retail Liquidity Program. This would also be consistent with the Act because the proposed new ''retail'' modifier could be utilized by all members and member organizations to identify retail flow outside of the Retail Liquidity Program and thereby differentiate such flow from Retail Orders within the Retail Liquidity Program.

Finally, the Exchange believes that it is subject to significant competitive forces, as described below in the Exchange's statement regarding the burden on competition.

For these reasons, the Exchange believes that the proposal is consistent with the Act.

B. Self-Regulatory Organization's Statement on Burden on Competition

In accordance with Section 6(b)(8) of the Act,[25] the Exchange believes that the proposed rule change would not impose any burden on competition that is not necessary or appropriate in furtherance of the purposes of the Act. Instead, the

[22] *See* Concept Release on Equity Market Structure, Securities Exchange Act Release No. 61358 (January 14, 2010), 75 FR 3594 (January 21, 2010) (''Concept Release'') (noting that dark pools and internalizing broker-dealers executed approximately 25.4% of share volume in September 2009). *See also* Mary Jo White, Focusing on Fundamentals: The Path to Address Equity Market Structure (Speech at the Security Traders Association 80th Annual Market Structure Conference, Oct. 2, 2013) (available on the Security and Exchange Commission (''Commission'') Web site) (''White Speech''); Mary L. Schapiro, Strengthening Our Equity Market Structure (Speech at the Economic Club of New York, Sept. 7, 2010) (available on the Commission's Web site) (''Schapiro Speech''). In her speech, Chair White noted a steadily increasing percentage of trading that occurs in ''dark'' venues, which appear to execute more than half of the orders of long-term investors. Similarly, in her speech, only three years earlier, Chair Schapiro noted that nearly 30 percent of volume in U.S.-listed equities was executed in venues that do not display their liquidity or make it generally available to the public and the percentage was increasing nearly every month.

[23] *See* NASDAQ Rule 7018.

[24] *See supra* note 9.

[25] 15 U.S.C. 78f(b)(8).

Exchange believes that the proposed change would increase competition among execution venues and encourage additional liquidity. In this regard, the Exchange believes that the transparency and competitiveness of attracting additional executions on an exchange market would encourage competition. The proposed change would also permit the Exchange to compete with other markets, including NASDAQ, which similarly provides a process for ''Designated Retail Orders'' that provide liquidity.[26] The proposal would also promote competition on the Exchange because the ability to designate an order as ''retail'' would be available to all members and member organizations that submit qualifying orders and satisfy the other related requirements.

C. Self-Regulatory Organization's Statement on Comments on the Proposed Rule Change Received From Members, Participants, or Others

No written comments were solicited or received with respect to the proposed rule change.

III. Date of Effectiveness of the Proposed Rule Change and Timing for Commission Action

The Exchange has filed the proposed rule change pursuant to Section 19(b)(3)(A)(iii) of the Act[27] and Rule 19b–4(f)(6) thereunder.[28] Because the proposed rule change does not: (i) significantly affect the protection of investors or the public interest; (ii) impose any significant burden on competition; and (iii) become operative prior to 30 days from the date on which it was filed, or such shorter time as the Commission may designate, if consistent with the protection of investors and the public interest, the proposed rule change has become effective pursuant to Section 19(b)(3)(A) of the Act and Rule 19b–4(f)(6)(iii) thereunder.

A proposed rule change filed under Rule 19b–(f)(6)[29] normally does not become operative prior to 30 days after the date of the filing. However, pursuant to Rule 19b–4(f)(6)(iii),[30] the Commission may designate a shorter time if such action is consistent with the protection of investors and the public interest. The Exchange has asked the Commission to waive the 30-day operative delay so that the proposal may become operative immediately upon filing. The Commission believes that waiving the 30-day operative delay is consistent with the protection of investors and the public interest because it would allow the Exchange immediately to adopt clear and transparent criteria concerning the submission of orders that are designated as ''retail'' and eligible to receive fee credits under the Exchange's current fee schedule. Accordingly, the Commission hereby grants the Exchange's request and designates the proposal operative upon filing.[31]

At any time within 60 days of the filing of this proposed rule change, the Commission summarily may temporarily suspend this rule change if it appears to the Commission that such action is necessary or appropriate in the public interest, for the protection of investors, or otherwise in furtherance of the purposes of the Act.

IV. Solicitation of Comments

Interested persons are invited to submit written data, views, and arguments concerning the foregoing, including whether the proposed rule change is consistent with the Act. Comments may be submitted by any of the following methods:

Electronic Comments

- Use the Commission's Internet comment form (*http://www.sec.gov/rules/sro.shtml*); or
- Send an email to *rule-comments@sec.gov.* Please include File Number SR–NYSE–2014–26 on the subject line.

Paper Comments

- Send paper comments in triplicate to Secretary, Securities and Exchange Commission, 100 F Street NE., Washington, DC 20549–1090.

All submissions should refer to File Number SR–NYSE–2014–26. This file number should be included on the subject line if email is used. To help the Commission process and review your comments more efficiently, please use only one method. The Commission will post all comments on the Commission's Internet Web site (*http://www.sec.gov/rules/sro.shtml*). Copies of the submission, all subsequent amendments, all written statements with respect to the proposed rule change that are filed with the Commission, and all written communications relating to the proposed rule change between the Commission and any person, other than those that may be withheld from the public in accordance with the provisions of 5 U.S.C. 552, will be available for Web site viewing and printing in the Commission's Public Reference Section, 100 F Street, NE., Washington, DC 20549–1090. Copies of the filing will also be available for Web site viewing and printing at the NYSE's principal office and on its Internet Web site at *www.nyse.com.* All comments received will be posted without change; the Commission does not edit personal identifying information from submissions. You should submit only information that you wish to make available publicly. All submissions should refer to File Number SR–NYSE–2014–26 and should be submitted on or before June 23, 2014.

For the Commission, by the Division of Trading and Markets, pursuant to delegated authority.[32]

Kevin M. O'Neill,

Deputy Secretary.

[FR Doc. 2014–12645 Filed 5–30–14; 8:45 am]

BILLING CODE 8011–01–P

[26] *See supra* note 23.

[27] 15 U.S.C. 78s(b)(3)(A)(iii).

[28] 17 CFR 240.19b–4(f)(6). In addition, Rule 19b–4(f)(6) requires the Exchange to give the Commission written notice of the Exchange's intent to file the proposed rule change, along with a brief description and text of the proposed rule change, at least five business days prior to the date of filing of the proposed rule change, or such shorter time as designated by the Commission. The Commission has waived that requirement for this proposed rule change.

[29] 17 CFR 240.19b–4(f)(6).

[30] 17 CFR 240.19b–4(f)(6)(iii).

[31] For purposes only of waiving the 30-day operative delay, the Commission has considered the proposed rule's impact on efficiency, competition, and capital formation. *See* 15 U.S.C. 78c(f).

[32] 17 CFR 200.30–3(a)(12).

SECURITIES AND EXCHANGE COMMISSION

[Release No. 34–72251; File No. SR–Phlx–2014–36]

Self-Regulatory Organizations; NASDAQ OMX PHLX LLC; Notice of Filing and Immediate Effectiveness of Proposed Rule Change Relating to Routing Fees

May 27, 2014.

Pursuant to Section 19(b)(1) of the Securities Exchange Act of 1934 (''Act''),[1] and Rule 19b–4 thereunder,[2] notice is hereby given that on May 15, 2014, NASDAQ OMX PHLX LLC (''Phlx'' or ''Exchange'') filed with the Securities and Exchange Commission (''SEC'' or ''Commission'') the proposed rule change as described in Items I, II, and III, below, which Items have been prepared by the Exchange. The Commission is publishing this notice to solicit comments on the proposed rule change from interested persons.

[1] 15 U.S.C. 78s(b)(1).

[2] 17 CFR 240.19b–4.

I. Self-Regulatory Organization's Statement of the Terms of the Substance of the Proposed Rule Change

The Exchange proposes to amend Section V of the Pricing Schedule entitled ''Routing Fees.''

While the changes proposed herein are effective upon filing, the Exchange has designated that the amendments be operative on June 2, 2014.

The text of the proposed rule change is available on the Exchange's Web site at *http://nasdaqomxphlx.cchwallstreet.com/,* at the principal office of the Exchange, and at the Commission's Public Reference Room.

II. Self-Regulatory Organization's Statement of the Purpose of, and Statutory Basis for, the Proposed Rule Change

In its filing with the Commission, the Exchange included statements concerning the purpose of and basis for the proposed rule change and discussed any comments it received on the proposed rule change. The text of these statements may be examined at the places specified in Item IV below. The Exchange has prepared summaries, set forth in sections A, B, and C below, of the most significant aspects of such statements.

A. Self-Regulatory Organization's Statement of the Purpose of, and Statutory Basis for, the Proposed Rule Change

1. Purpose

The purpose of this filing is to amend the Routing Fees in Section V of the Pricing Schedule in order to recoup costs incurred by the Exchange to route orders to away markets.

Today, the Exchange assesses a Non-Customer a $0.95 per contract Routing Fee to any options exchange. The Customer [3] Routing Fee for option orders routed to The NASDAQ Options Exchange LLC (''NOM'') is a $0.10 per contract Fixed Fee in addition to the actual transaction fee assessed. The Customer Routing Fee for option orders routed to NASDAQ OMX BX, Inc. (''BX Options'') is $0.10 per contract. The Customer Routing Fee for option orders routed to all other options exchanges [4] (excluding NOM and BX Options) is a fixed fee of $0.20 per contract (''Fixed Fee'') in addition to the actual transaction fee assessed. If the away market pays a rebate, the Routing Fee is $0.10 per contract.

With respect to the fixed costs, the Exchange incurs a fee when it utilizes Nasdaq Execution Services LLC (''NES''),[5] a member of the Exchange and the Exchange's exclusive order router.[6] [sic] Each time NES routes an order to an away market, NES is charged a clearing fee [7] and, in the case of certain exchanges, a transaction fee is also charged in certain symbols, which fees are passed through to the Exchange. The Exchange currently recoups clearing and transaction charges incurred by the Exchange as well as certain other costs incurred by the Exchange when routing to away markets, such as administrative and technical costs associated with operating NES, membership fees at away markets, Options Regulatory Fees (''ORFs''), staffing and technical costs associated with routing options. The Exchange assesses the actual away market fee at the time that the order was entered into the Exchange's trading system. This transaction fee is calculated on an order-by-order basis since different away markets charge different amounts.

The Exchange is proposing to increase Routing Fees to account for increased OCC fees and other increased costs associated with clearing, ORF and other operational costs. The Exchange proposes to increase Routing Fees for Non-Customer orders from $0.95 to $0.97 per contract. The Exchange also proposes to increase Customer Routing Fees as described herein. The Exchange proposes to increase Customer Routing Fees to NOM from a Fixed Fee of $0.10 to $0.12 per contract, in addition to the actual transaction fee assessed. The Exchange proposes to increase Customer Routing Fees to BX Options from $0.10 to $0.12 per contract. The Exchange also proposes to amend Routing Fees to all other exchanges (except NOM and BX Options) from $0.20 to $0.22 per contract, in addition to the actual transaction fee assessed, provided the away market does not pay a rebate. If the away market pays a rebate, the Routing Fee assessed would be $0.12 per contract, an increase from the current $0.10 per contract. The Exchange proposes these increases to recoup an additional portion of the costs incurred by the Exchange for routing these orders.

The Exchange is proposing to increase Non-Customer and Customer Routing Fees by $0.02 per contract to cover the increased costs of offering its members the opportunity to route to other options exchanges. With the recent increase by OCC [8] as well as increases in ORFs and Phlx's operational expenses, the Exchange sees to further recoup a portion of increased costs with the increase to its Routing Fees.

Today the Exchange does not assess the actual transaction fee assessed by BX Options, rather the Exchange only assesses the Fixed Fee, because the Exchange would continue to retain the rebate to offset the cost to route orders to BX Options. This is the not the case for all orders routed to BX Options because not all Customer orders receive a rebate.[9] This will remain the same. Similarly, the Exchange is proposing to amend the Customer Routing Fee assessed when routing to all other options exchanges, if the away market pays a rebate, from a $0.10 to a $0.12 per contract Fixed Fee, in order to recoup an additional portion of the costs incurred by the Exchange for routing these orders. The Exchange does not assess the actual transaction fee assessed by the away market, rather the Exchange only assesses the Fixed Fee, because the Exchange would continue to retain the rebate to offset the cost to route orders to these away markets. This will remain the same. Finally, the Exchange is not amending the credit it offers to member organizations that qualify for a Tier 2, 3, 4 or 5 rebate in the Customer Rebate Program in Section B of the Pricing Schedule; and route away more than 5,000 Customer contracts per day in a given month to an away market.[10]

[3] The term ''Customer'' applies to any transaction that is identified by a member or member organization for clearing in the Customer range at The Options Clearing Corporation (''OCC'') which is not for the account of broker or dealer or for the account of a ''Professional'' (as that term is defined in Rule 1000(b)(14)).

[4] Including BATS Exchange, Inc. (''BATS''), BOX Options Exchange LLC (''BOX''), the Chicago Board Options Exchange, Incorporated (''CBOE''), C2 Options Exchange, Incorporated (''C2''), International Securities Exchange, LLC (''ISE''), the Miami International Securities Exchange, LLC (''MIAX''), NYSE Arca, Inc. (''NYSE Arca''), NYSE MKT LLC (''NYSE Amex'') and ISE Gemini, LLC (''Gemini'').

[5] The Exchange filed a proposed rule change to utilize Nasdaq Execution Services, LLC (''NES'') for outbound order routing. *See* Securities Exchange Act Release No. 71417 (January 28, 2014), 79 FR 6253 (February 3, 2014) (SR–Phlx–2014–04).

[7] OCC assessed a $0.01 per contract side. The fee has recently been increased from $0.01 to $0.02 per contract side. *See* Securities Exchange Act Release No. 71769 (March 21, 2014), 79 FR 17214 (March 21, 2014) (SR–OCC–2014–05).

[8] *Id.*

[9] BX Options pays a Customer Rebate to Remove Liquidity as follows: Customers are paid $0.32 per contract in All Other Penny Pilot Options (excluding BAC, IWM, QQQ, SPY and VXX) and $0.70 per contract in Non-Penny Pilot Options. *See* BX Options Rules at Chapter XV, Section 2(1).

[10] Today, a member organization that: (1) Qualifies for a Tier 2, 3, 4 or 5 rebate in the Customer Rebate Program in Section B of the Pricing Schedule; and (2) routes away more than 5,000 Customer contracts per day in a given month to an away market is entitled to receive a credit equal to the applicable Fixed Fee plus $0.05 per

Continued

2. Statutory Basis

The Exchange believes that its proposal to amend its Pricing Schedule is consistent with Section 6(b) of the Act [11] in general, and furthers the objectives of Section 6(b)(4) and (b)(5) of the Act [12] in particular, in that it provides for the equitable allocation of reasonable dues, fees and other charges among members and issuers and other persons using any facility or system which Phlx operates or controls, and is not designed to permit unfair discrimination between customers, issuers, brokers, or dealers.

The Exchange believes that amending the Non-Customer and Customer Routing Fees by $0.02 per contracts is reasonable because the Exchange desires to recoup an additional portion of the cost it incurs when routing Non-Customer and Customer orders. Specifically, the Exchange's proposal to increase Non-Customer fees from $0.95 to $0.97 per contract is reasonable because the additional $0.02 per contract fee will recoup increased costs borne by Phlx.

The Exchange believes that amending the Customer Routing Fees for orders routed to NOM from a Fixed Fee of $0.10 to $0.12 per contract is reasonable because the Exchange desires to recoup an additional portion of the cost it incurs when routing Customer orders to NOM. The Exchange will continue to also assess actual transaction fees assessed by NOM for Customer orders.

The Exchange believes that amending the Customer Routing Fee for orders routed to BX Options from a Fixed Fee of $0.10 to $0.12 per contract is reasonable because the Exchange desires to recoup an additional portion of the cost it incurs when routing Customer orders to BX Options, similar to the amount of Fixed Fee it proposes to assess for orders routed to NOM. While the Exchange would continue to retain any rebate paid by BX Options, the Exchange does not assess the actual transaction fee that is charged by BX Options for Customer orders.

The Exchange believes that continuing to assess lower Fixed Fees to route Customer orders to NOM and BX Options, as compared to other options exchanges, is reasonable as the Exchange is able to leverage certain infrastructure to offer those markets lower fees as explained further below.

The Exchange believes that increasing the fee for routing to all other options exchanges (other than NOM and BX Options) from $0.20 to $0.22 per contact is reasonable because the increased fee would recoup costs associated with routing Customer orders, in addition to the actual transaction fee when no rebate is paid. Similarly, the Exchange believes that amending the Customer Routing Fee to other away markets, other than NOM and BX Options, in the instance the away market pays a rebate from $0.10 to $0.12 per contract is reasonable because the Exchange desires to recoup an additional portion of the cost it incurs when routing orders to these away markets. While the Exchange would continue to retain any rebate paid by these away markets, the Exchange does not assess the actual transaction fee that is charged by the away market for Customer orders. The Fixed Fee for Customer orders is an approximation of the costs the Exchange will be charged for routing orders to away markets. As a general matter, the Exchange believes that the proposed fees for Customer orders routed to markets which pay a rebate, such as BX Options and other away markets, would allow it to recoup and cover a portion of the costs of providing optional routing services for Customer orders because it better approximates the costs incurred by the Exchange for routing such orders. While each destination market's transaction charge varies and there is a cost incurred by the Exchange when routing orders to away markets, including, OCC clearing costs, administrative and technical costs associated with operating NES, membership fees at away markets, ORFs and technical costs associated with routing options, the Exchange believes that the proposed Routing Fees will enable it to recover the increased costs it incurs to route Customer orders to away markets.

The Exchange believes that amending the Non-Customer Routing Fees from $0.95 to $0.97 per contract is equitable and not unfairly discriminatory because the Exchange would assess the same Non-Customer Routing Fee to all Non-Customer orders routed away. The Exchange believes that amending the Customer Routing Fee for orders routed to NOM from a Fixed Fee of $0.10 to $0.12 per contract, in addition to the actual transaction fee, is equitable and not unfairly discriminatory because the Exchange would assess the same Fixed Fee to all orders routed to NOM in addition to the transaction fee assessed by that market. With respect to BX Options, the Exchange believes that amending the Customer Routing Fee for orders routed to BX Options from a Fixed Fee of $0.10 to $0.12 per contract is equitable and not unfairly discriminatory because the Exchange would assess the same Fixed Fee to all Customer orders routed to BX Options. With respect routing Customer orders to all other away markets (except NOM and BX Options) the Exchange believes that amending the Customer Routing Fee from $0.20 to $0.22 per contract, in addition to the actual transaction fee assessed) is equitable and not unfairly discriminatory because the Exchange would assess the same fee to all Customer orders routed to away markets, provided the away market does not pay a rebate. The Exchange believes that increasing the Routing Fee to away markets (other than NOM and BX Options), when the away market pays a rebate, from $0.10 to $0.12 per contract is equitable and not unfairly discriminatory because all Customer orders routed to away markets (other than NOM and BX Options) would be assessed the same fee, provided the away market paid a rebate.

The Exchange would uniformly assess a $0.12 per contract Fixed Fee to orders routed to NASDAQ OMX exchanges because the Exchange is passing along the saving realized by leveraging NASDAQ OMX's infrastructure and scale to market participants when those orders are routed to NOM or BX Options and is providing those savings to all market participants. Furthermore, PHLX XL routes orders to away markets where the Exchange's disseminated bid or offer is inferior to the national best bid (best offer) (''NBBO'') price and based on price first.[13] The Exchange believes that it is equitable and not unfairly discriminatory to assess a fixed cost of $0.12 per contract to route orders to NOM and BX Options because the cost, in terms of actual cash outlays, to the Exchange to route to those markets is lower. For example, costs related to routing to NOM and BX Options are lower as compared to other away markets because NES is utilized by all

contract, unless the away market transaction fee is $0.00 or the away market pays a rebate, in which case the member organization is entitled to receive a credit equal to the applicable Fixed Fee.

[11] 15 U.S.C. 78f(b).

[12] 15 U.S.C. 78f(b)(4), (5).

[13] *See* Rule 1080(m). The Phlx XL II system will contemporaneously route an order marked as an Intermarket Sweep Order (''ISO'') to each away market disseminating prices better than the Exchange's price, for the lesser of: (a) The disseminated size of such away markets, or (b) the order size and, if order size remains after such routing, trade at the Exchange's disseminated bid or offer up to its disseminated size. If contracts still remain unexecuted after routing, they are posted on the book. Once on the book, should the order subsequently be locked or crossed by another market center, the Phlx XL II system will not route the order to the locking or crossing market center, with some exceptions noted in Rule 1080(m).

three exchanges to route orders.[14] NES and the three NASDAQ OMX options markets have a common data center and staff that are responsible for the day-to-day operations of NES. Because the three exchanges are in a common data center, Routing Fees are reduced because costly expenses related to, for example, telecommunication lines to obtain connectivity are avoided when routing orders in this instance. The costs related to connectivity to route orders to other NASDAQ OMX exchanges are lower than the costs to route to a non-NASDAQ OMX exchange. When routing orders to non-NASDAQ OMX exchanges, the Exchange incurs costly connectivity charges related to telecommunication lines, membership and access fees, and other related costs when routing orders. Market participants may submit orders to the Exchange as ineligible for routing or ''DNR'' to avoid Routing Fees.[15] It is important to note that when orders are routed to an away market they are routed based on price first.[16]

B. Self-Regulatory Organization's Statement on Burden on Competition

The Exchange does not believe that the proposed rule change will impose any burden on competition not necessary or appropriate in furtherance of the purposes of the Act. The Exchange does not believe that the proposal creates a burden on intra-market competition because the Exchange is applying the same Routing Fee increase of $0.02 per contract to all market participants. The Exchange will continue to assess separate Customer Routing Fees. Customers will continue to receive the lowest fees as compared to Non-Customers when routing orders, as is the case today. Other options exchanges also assess lower Routing Fees for customer orders as compared to Non-Customer orders.[17]

The Exchange's proposal would allow the Exchange to continue to recoup its costs when routing both Non-Customer and Customer orders. The Exchange continues to pass along savings realized by leveraging NASDAQ OMX's infrastructure and scale to market participants when Customer orders are routed to NOM and BX Options and is providing those savings to all market participants. Today, other options exchanges also assess fixed routing fees to recoup costs incurred by the exchange to route orders to away markets.[18] Market participants may submit orders to the Exchange as ineligible for routing or ''DNR'' to avoid Routing Fees.[19] It is important to note that when orders are routed to an away market they are routed based on price first.[20]

C. Self-Regulatory Organization's Statement on Comments on the Proposed Rule Change Received From Members, Participants, or Others

No written comments were either solicited or received.

III. Date of Effectiveness of the Proposed Rule Change and Timing for Commission Action

The foregoing rule change has become effective pursuant to Section 19(b)(3)(A)(ii) of the Act.[21] At any time within 60 days of the filing of the proposed rule change, the Commission summarily may temporarily suspend such rule change if it appears to the Commission that such action is necessary or appropriate in the public interest, for the protection of investors, or otherwise in furtherance of the purposes of the Act. If the Commission takes such action, the Commission shall institute proceedings to determine whether the proposed rule should be approved or disapproved.

IV. Solicitation of Comments

Interested persons are invited to submit written data, views, and arguments concerning the foregoing, including whether the proposed rule change is consistent with the Act. Comments may be submitted by any of the following methods:

Electronic Comments

- Use the Commission's Internet comment form (*http://www.sec.gov/rules/sro.shtml*); or
- Send an email to *rule-comments@sec.gov.* Please include File Number SR–Phlx–2014–36 on the subject line.

Paper Comments

- Send paper comments in triplicate to Secretary, Securities and Exchange Commission, 100 F Street NE., Washington, DC 20549–1090.

All submissions should refer to File Number SR–Phlx–2014–36. This file number should be included on the subject line if email is used. To help the Commission process and review your comments more efficiently, please use only one method. The Commission will post all comments on the Commission's Internet Web site (*http://www.sec.gov/rules/sro.shtml*). Copies of the submission, all subsequent amendments, all written statements with respect to the proposed rule change that are filed with the Commission, and all written communications relating to the proposed rule change between the Commission and any person, other than those that may be withheld from the public in accordance with the provisions of 5 U.S.C. 552, will be available for Web site viewing and printing in the Commission's Public Reference Room, 100 F Street NE., Washington, DC 20549 on official business days between the hours of 10:00 a.m. and 3:00 p.m. Copies of such filing also will be available for inspection and copying at the principal office of the Exchange. All comments received will be posted without change; the Commission does not edit personal identifying information from submissions. You should submit only information that you wish to make available publicly. All submissions should refer to File Number SR–Phlx–2014–36, and should be submitted on or before June 23, 2014.

For the Commission, by the Division of Trading and Markets, pursuant to delegated authority.[22]

Kevin M. O'Neill,

Deputy Secretary.

[FR Doc. 2014–12643 Filed 5–30–14; 8:45 am]

BILLING CODE 8011–01–P

[14] *See* Chapter VI, Section 11 of the BX Options and NOM Rules.

[15] *See* Rule 1066(h) (Certain Types of Orders Defined) and 1080(b)(i)(A) (PHLX XL and PHLX XL II).

[16] PHLX XL will route orders to away markets where the Exchange's disseminated bid or offer is inferior to the national best bid (best offer) (''NBBO'') price.

[17] BATS assesses lower customer routing fees as compared to non-customer routing fees per the away market. For example BATS assesses Phlx customer routing fees of $0.45 per contract and an ISE [sic] non-customer routing fee of $0.65 per contract. *See* BATS BZX Exchange Fee Schedule.

[18] *See* CBOE's Fees Schedule and ISE's Fee Schedule.

[19] *See* note 15.

[20] *See* note 16.

[21] 15 U.S.C. 78s(b)(3)(A)(ii).

[22] 17 CFR 200.30–3(a)(12).

SECURITIES AND EXCHANGE COMMISSION

[Release No. 34–72260; File No. SR–NSCC–2014–802]

Self-Regulatory Organizations; National Securities Clearing Corporation; Notice of Filing Amendment No. 1 and No Objection to Advance Notice, as Modified by Amendment No. 1, To Enhance NSCC's Existing Parametric Value-at-Risk Margining Model

May 27, 2014.

I. Introduction

On March 28, 2014, National Securities Clearing Corporation (''NSCC'') filed with the Securities and Exchange Commission (''Commission'') advance notice SR–NSCC–2014–802 (''Advance Notice'') pursuant to Section 806(e)(1) of the Payment, Clearing, and Settlement Supervision Act of 2010 (''Clearing Supervision Act'') [1] and Rule 19b–4(n)(1)(i) of the Securities Exchange Act of 1934 (''Exchange Act'').[2] The Advance Notice was published in the **Federal Register** on April 21, 2014.[3] The Commission did not receive any comment letters to the Advance Notice. On May 6, 2014, NSCC filed Amendment No. 1 to the Advance Notice (''Amendment''). This publication serves as notice of filing of Amendment No. 1 and no objection to the Advance Notice, as amended (''Amended Advance Notice'').

II. Description of the Amended Advance Notice

A. Background

NSCC maintains a Clearing Fund to have on deposit assets sufficient to satisfy losses that may otherwise be incurred by NSCC as the result of the default of an NSCC member (''Member'') and the resulting closeout of that Member's unsettled positions under NSCC's trade guaranty. Each Member is required to contribute to the Clearing Fund pursuant to a formula calculated daily. The Clearing Fund formula accounts for a variety of risk factors through the application of a number of components, including value-at-risk (''VaR''). The VaR component of the Clearing Fund calculation is a core component of the formula and is designed to calculate the amount of money that may be lost on a portfolio over a given period of time that is assumed necessary to liquidate the portfolio (e.g., three days), within a given level of confidence (e.g., 99%).

NSCC performs back testing to measure the performance of Members' portfolios against the calculated VaR margin requirements for those portfolios. Over the past few years, the results of those tests have shown that while the NSCC's VaR margin component has remained mostly above its 99 percent coverage target when tested over a longer time horizon (e.g., a 12-month rolling window), coverage fell below the 99 percent target in a few instances where the tests were conducted over a shorter time horizon (e.g., a 1-month window).

Historically, parametric VaR models have computed risk on the assumption that the distributional return of an equity portfolio is normal. However, the increased frequency of market volatility in recent years has stressed the performance of parametric VaR models and has called into question that assumption. In other words, certain risks, such as ''fat-tail risk,'' may not be properly addressed by parametric VaR models that are based solely on the assumption of a normal return distribution, as demonstrated by NSCC's back testing results. As such, industry participants have begun to move away from the use of assuming normal distributions for asset returns in parametric VaR models and, instead, have begun to use other distributions, such as Student's t-distributions, that better account for fat-tail risk events. Therefore, with this Amended Advance Notice, NSCC will adjust its current VaR model to incorporate Student's t-distributions into the model in a manner specific to NSCC's needs, as described below.

B. Proposed Change

The proposed change contained in the Amended Advance Notice will enhance NSCC's existing parametric VaR model by supplementing the current assumption of a normal return distribution for equity portfolios with a factor that utilizes the degrees of freedom (''DOF'') derived from a family of Student's t-distributions, which are more representative of the historically observed return distributions in the equities markets. NSCC will estimate periodically the DOF factor of the empirical t-distribution in the model by using daily return data from the S&P 500 over a historical window no shorter than 12-months. NSCC will then compute a multiplication factor that represents the magnitude of increase of t-distribution-based parametric VaR from the normal-based parametric VaR. This multiplication factor will be applied to Members' VaR margin requirement.

NSCC initially proposed in the Advance Notice to use its existing VaR model, with the normal distribution assumption, as a floor to the proposed model. However, under the Amendment, NSCC proposes not to use its current model as a floor but, instead, to set a floor on the DOF (i.e., set a lower bound on the DOF) in the proposed model that will serve the same function. By doing so, the Amended Advance Notice mimics the intent of the original proposal while ensuring that the amount of margin collected by NSCC during volatile market conditions is greater than the amount of margin computed under the existing and originally proposed methodologies.

The proposed change contained in the Amended Advance Notice is expected to improve NSCC's back-testing performance over shorter time horizons, particularly during more volatile market environments, and it should enable NSCC's VaR model to better account for the higher degree of fat-tail risk observed in equities markets.

III. Commission Findings and Notice of No Objection

Although the Clearing Supervision Act does not specify a standard of review for advance notices, the Commission believes that the stated purpose of the Clearing Supervision Act is instructive.[4] The stated purpose of the Clearing Supervision Act is to mitigate systemic risk in the financial system and promote financial stability by, among other things, promoting uniform risk management standards for designated systemically important financial market utilities (''SIFMU'').[5]

Section 805(a)(2) of the Clearing Supervision Act authorizes the Commission to prescribe risk management standards for the payment, clearing, and settlement activities of designated clearing entities and financial institutions engaged in designated activities for which it is the supervisory agency or the appropriate financial regulator.[6] Section 805(b) of the Clearing Supervision Act states that the objectives and principles for the risk management standards prescribed under Section 805(a) shall be to:

- Promote robust risk management;
- promote safety and soundness;
- reduce systemic risks; and
- support the stability of the broader financial system.[7]

[1] 12 U.S.C. 5465(e)(1).

[2] 17 CFR 240.19b–4(n)(1)(i).

[3] Release No. 34–71945 (Apr. 15, 2014), 79 FR 22174 (Apr. 21, 2014).

[4] 12 U.S.C. 5461(b).

[5] *Id.*

[6] 12 U.S.C. 5464(a)(2).

[7] 12 U.S.C. 5464(b).

The Commission adopted risk management standards under Section 805(a)(2) of the Clearing Supervision Act[8] (''Clearing Agency Standards''),[9] which the Commission recently proposed to amend, in part, to establish additional standards.[10] The Clearing Agency Standards became effective on January 2, 2013 and require registered clearing agencies to establish, implement, maintain, and enforce written policies and procedures that are reasonably designed to meet certain minimum requirements for their operations and risk management practices on an ongoing basis.[11] As such, it is appropriate for the Commission to review advance notices against the objectives and principles for risk management standards as described in Section 805(b) of the Clearing Supervision Act,[12] as well as the applicable Clearing Agency Standards promulgated under Section 805(a) of the Clearing Supervision Act.[13]

The Amended Advance Notice's proposed change, as described above, is designed to enhance the VaR model that NSCC uses to calculate Clearing Fund requirements for its Members. Consistent with Section 805(b) of the Clearing Supervision Act,[14] the Commission believes that the Amended Advance Notice will help promote robust risk management and mitigate systemic risk by aligning more closely the assumptions utilized by NSCC's VaR model regarding distribution returns on equity portfolios with observed returns, which, in turn, will enable the calculation for Members' Clearing Fund margin requirements to better account for fat-tail risk events. This change should increase the financial resources available to NSCC at appropriate times and constitutes an improvement to its risk management practices.

Commission Rule 17Ad–22(b)(2), adopted as part of the Clearing Agency Standards,[15] requires a registered clearing agency that is also a central counterparty (''CCP'') to ''establish, implement, maintain and enforce written policies and procedures reasonably designed to . . . [u]se margin requirements to limit its credit exposures to participants under normal market conditions and use risk-based models and parameters to set margin requirements and review such margin requirements and the related risk-based models and parameters at least monthly.'' [16] Furthermore, Commission Rule 17Ad–22(b)(3), also adopted as part of the Clearing Agency Standards,[17] requires, a registered CCP to ''establish, implement, maintain, and enforce written policies and procedures reasonably designed to . . . [m]aintain sufficient financial resources to withstand, at a minimum, a default by the participant family to which it has the largest exposure in extreme but plausible market conditions. . . .'' [18]

The proposed change contained in the Amended Advance Notice, as discussed above, furthers NSCC's compliance with Rules 17Ad–22(b)(2) and (b)(3) because the change will enable the assumptions used in NSCC's risk-based VaR model to better reflect fat-tailed event risk, thus leading to calculations of Members' Clearing Fund margin requirements that better reflect historically observed returns, increased deposits to NSCC's Clearing Fund at appropriate times, and increased resources available to NSCC in the event of a defaulting Member to which NSCC has the largest exposure in extreme market conditions.

For the reasons stated above, the Commission does not object to the Amended Advance Notice.

IV. Solicitation of Comments to Amendment No. 1

Interested persons are invited to submit written data, views, and arguments concerning the foregoing, including whether the Amendment No. 1 to the Advance Notice is consistent with the Clearing Supervision Act. Comments may be submitted by any of the following methods:

Electronic Comments

- Use the Commission's Internet comment form (*http://www.sec.gov/rules/sro.shtml*); or
- Send an email to *rule-comments@sec.gov. Please include* File No. SR–NSCC–2014–802 on the subject line.

Paper Comments

- Send paper comments in triplicate to Secretary, Securities and Exchange Commission, 100 F Street NE., Washington, DC 20549–1090.

All submissions should refer to File No. SR–NSCC–2014–802. This file number should be included on the subject line if email is used. To help the Commission process and review your comments more efficiently, please use only one method. The Commission will post all comments on the Commission's Internet Web site (*http://www.sec.gov/rules/sro.shtml*). Copies of the submission, all subsequent amendments, all written statements with respect to the Advance Notice that are filed with the Commission, and all written communications relating to the Advance Notice between the Commission and any person, other than those that may be withheld from the public in accordance with the provisions of 5 U.S.C. 552, will be available for Web site viewing and printing in the Commission's Public Reference Room, 100 F Street, NE., Washington, DC 20549, on official business days between the hours of 10:00 a.m. and 3:00 p.m. Copies of the filing also will be available for inspection and copying at the principal office of NSCC and on NSCC's Web site (*http://dtcc.com/legal/sec-rule-filings.aspx*). All comments received will be posted without change; the Commission does not edit personal identifying information from submissions. You should submit only information that you wish to make available publicly. All submissions should refer to File No. SR–NSCC–2014–802 and should be submitted on or before June 23, 2014.

V. Conclusion

It is therefore noticed, pursuant to Section 806(e)(1)(I) of the Clearing Supervision Act,[19] that the Commission *does not object* to the proposed change described in advance notice SR–NSCC–2014–802, as modified by Amendment No. 1, and that NSCC be and hereby is *authorized* to implement the proposed change as of the date of this notice.

By the Commission.

Kevin M. O'Neill,

Deputy Secretary.

[FR Doc. 2014–12648 Filed 5–30–14; 8:45 am]

BILLING CODE 8011–01–P

[8] 12 U.S.C. 5464(a)(2).

[9] Release No. 34–68080 (Oct. 22, 2012), 77 FR 66219 (Nov. 2, 2012).

[10] *See* Release No. 34–71699 (Mar. 12, 2014), 79 FR 16865 (Mar. 26, 2014) proposing to amend Rule 17Ad–22 for covered clearing agencies.

[11] The Clearing Agency Standards are substantially similar to the risk management standards established by the Board of Governors of the Federal Reserve System (''Board of Governors'') governing the operations of SIFMUs that are not clearing entities and financial institutions engaged in designated activities for which the Commission or the Commodity Futures Trading Commission is the Supervisory Agency. *See* Financial Market Utilities, 77 FR 45907 (Aug. 2, 2012).

[12] 12 U.S.C. 5464(b).

[13] 12 U.S.C. 5464(a).

[14] *See* 12 U.S.C. 5464(b).

[15] Release No. 34–68080 (Oct. 22, 2012), 77 FR 66219 (Nov. 2, 2012).

[16] 17 CFR 240.17Ad–22(b)(2).

[17] Release No. 34–68080 (Oct. 22, 2012), 77 FR 66219 (Nov. 2, 2012).

[18] 17 CFR 240.17Ad–22(b)(3).

[19] 12 U.S.C. 5465(e)(1)(I).

SECURITIES AND EXCHANGE COMMISSION

[Release No. 34–72255; File No. SR–NYSEArca–2014–10]

Self-Regulatory Organizations; NYSE Arca, Inc.; Order Instituting Proceedings to Determine Whether To Approve or Disapprove Proposed Rule Change To Adopt NYSE Arca Equities Rule 8.900, Which Permits the Listing and Trading of Managed Portfolio Shares, and To List and Trade Shares of the ActiveShares℠ Large-Cap Fund, ActiveShares℠ Mid-Cap Fund, and ActiveShares℠ Multi-Cap Fund Pursuant to That Rule

May 27, 2014.

On February 7, 2014, NYSE Arca, Inc. (''Exchange'') filed with the Securities and Exchange Commission (''Commission''), pursuant to Section 19(b)(1) of the Securities Exchange Act of 1934 (''Act'') [1] and Rule 19b–4 thereunder,[2] a proposed rule change to adopt new NYSE Arca Equities Rule 8.900, which would govern the listing and trading of Managed Portfolio Shares, and to list and trade shares of the ActiveShares℠ Large-Cap Fund, ActiveShares℠ Mid-Cap Fund, and ActiveShares℠ Multi-Cap Fund (collectively, ''Funds'') under proposed NYSE Arca Equities Rule 8.900. The proposed rule change was published for comment in the **Federal Register** on February 26, 2014.[3] The Commission received one comment letter on the proposed rule change.[4] On April 7, 2014, pursuant to Section 19(b)(2) of the Act,[5] the Commission designated a longer period within which to approve the proposed rule change, disapprove the proposed rule change, or institute proceedings to determine whether to disapprove the proposed rule change.[6] The Commission received two additional comment letters on the proposed rule change, including a letter from the Exchange in support of its proposal.[7] This Order institutes proceedings under Section 19(b)(2)(B) of the Act [8] to determine whether to approve or disapprove the proposed rule change.

I. Description of the Proposal

As described in the Notice, the Exchange proposes: (1) To adopt new NYSE Arca Equities Rule 8.900, which would permit the listing and trading, or trading pursuant to unlisted trading privileges (''UTP''), of Managed Portfolio Shares, which are securities issued by an actively managed open-end investment management company; and (2) to list and trade shares (''Shares'') of the Funds under proposed NYSE Arca Equities Rule 8.900.[9] The discussion below summarizes the Exchange's proposal, details of which are described in the Notice.[10]

A. Proposed Listing Rules

The Exchange's proposal defines the term ''Managed Portfolio Share'' as a security that (a) is issued by a registered investment company (''Investment Company'') organized as an open-end management investment company or similar entity that invests in a portfolio of securities selected by the Investment Company's investment adviser consistent with the Investment Company's investment objectives and policies; (b) is issued in any number of shares for a cash amount equal to the next determined net asset value (''NAV''); (c) may be redeemed for cash by any Retail Investor (as defined below) in any size less than a Redemption Unit (as defined below) for a cash amount equal to the next determined NAV; and (d) when aggregated in a number of shares equal to a Redemption Unit or multiples thereof, may be redeemed at a holder's request, with payment to the holder to be made, through a blind trust established for the holder's benefit, in the form of securities, cash, or both with a value equal to the next determined NAV.

While funds issuing Managed Portfolio Shares will be actively-managed and, to that extent, will be similar to Managed Fund Shares (which are actively-managed funds listed and traded under NYSE Arca Equities Rule 8.600), Managed Portfolio Shares differ from Managed Fund Shares in the following important respects. First, in contrast to Managed Fund Shares, for which a ''Disclosed Portfolio'' is required to be disseminated at least once daily,[11] the portfolio for an issue of Managed Portfolio Shares will be disclosed once quarterly in accordance with normal disclosure requirements otherwise applicable to open-end investment companies registered under the 1940 Act.[12] Second, in connection with the redemption of shares in Redemption Unit [13] size, the in-kind delivery of any portfolio securities will generally be effected through a blind trust for the benefit of the redeeming authorized participant, and the blind trust will liquidate the portfolio securities pursuant to standing instructions from the authorized participant without disclosing the identity of those securities to the authorized participant. Third, as with traditional open-end investment companies, ''Retail Investors'' [14] will be able to redeem shares for cash directly from a fund on any day and in any size

[1] 15 U.S.C. 78s(b)(1).

[2] 17 CFR 240.19b–4.

[3] *See* Securities Exchange Act Release No. 71588 (Feb. 20, 2014), 79 FR 10848 (''Notice''), available at *http://www.sec.gov/rules/sro/nysearca.shtml.*

[4] *See* Letter from Gary L. Gastineau, President, ETF Consultants.com, Inc., to Elizabeth M. Murphy, Secretary, Commission (Mar 18, 2014) (''Gastineau Letter'').

[5] 15 U.S.C. 78s(b)(2).

[6] *See* Securities Exchange Act Release No. 71895, 79 FR 20285 (Apr. 11, 2014). The Commission designated a longer period within which to take action on the proposed rule change and designated May 27, 2014 as the date by which it should approve, disapprove, or institute proceedings to determine whether to disapprove the proposed rule change.

[7] *See* Letter from Dennis J. DeCore, Former Co-Head U.S. Index Arbitrage (1997–2007), Nomura Securities, to Elizabeth M. Murphy, Secretary, Commission (Apr. 8, 2014) (''DeCore Letter''); and Letter from Martha Redding, Chief Counsel and Assistant Corporate Secretary, NYSE Euronext, to Secretary, Commission (May 14, 2014) (''Response Letter''). All of the comment letters are available at *http://www.sec.gov/comments/sr-nysearca-2014-10/nysearca201410.shtml.*

[8] 15 U.S.C. 78s(b)(2)(B).

[9] The Exchange also proposes to amend NYSE Arca Equities Rule 7.34(a)(4)(A) (Trading Sessions) to include Managed Portfolio Shares in the trading halt provision for shares traded pursuant to UTP during the Exchange's Opening Session.

[10] *See* Notice, *supra* note 3. Additional information regarding the Trust and the Shares, including investment strategies, risks, creation and redemption procedures, fees, portfolio holdings disclosure policies, distributions and taxes is available in the registration statement filed by the Trust on January 22, 2014 on Form N–1A under the Securities Act of 1933 and under the Investment Company Act of 1940 (''1940 Act'') relating to the Funds (File Nos. 333–171987 and 811–22524) (''Registration Statement'').

[11] NYSE Arca Equities Rule 8.600(c)(2) defines the term ''Disclosed Portfolio'' as the identities and quantities of the securities and other assets held by the Investment Company that will form the basis for the Investment Company's calculation of net asset value at the end of the business day. NYSE Arca Equities Rule 8.600(d)(2)(B)(i) requires that the Disclosed Portfolio be disseminated at least once daily and that it be made available to all market participants at the same time.

[12] A mutual fund is required to file with the Commission its complete portfolio schedules for the second and fourth fiscal quarters on Form N–SAR under the 1940 Act, and is required to file its complete portfolio schedules for the first and third fiscal quarters on Form N–Q under the 1940 Act, within 60 days of the end of the quarter. Form N–Q requires funds to file the same schedules of investments that are required in annual and semi-annual reports to shareholders. These forms are available to the public on the Commission's Web site at *www.sec.gov.*

[13] A ''Redemption Unit'' is a specified number of Managed Portfolio Shares used for determining whether a retail investor may redeem for cash.

[14] Under the proposal, a ''Retail Investor'' is defined as (i) a natural person; (ii) a trust established exclusively for the benefit of a natural person or a group of related family members; or (iii) a tax deferred retirement plan where investments are selected by a natural person purchasing for its own account.

less than a Redemption Unit at the fund's NAV, as described in more detail below. Fourth, investors will be able to purchase shares either (a) in the secondary markets (e.g., the Exchange) at market prices or (b) for cash directly from a fund in any amount on any day a fund determines its NAV, as described in more detail below.

For each series of Managed Portfolio Shares, an estimated value, defined in the proposed rules as the ''Portfolio Indicative Value'' (''PIV''), that reflects an estimated intraday value of a fund's portfolio will be disseminated. The PIV will be based upon all of a fund's holdings as of the close of the prior business day and will be widely disseminated by one or more major market data vendors at least every 15 seconds during the Exchange's Core Trading Session (normally, 9:30 a.m. to 4:00 p.m., Eastern Time). The Exchange states that dissemination of the PIV will allow investors to determine the estimated intra-day value of the underlying portfolio of a series of Managed Portfolio Shares on a daily basis and will provide a close estimate of that value throughout the trading day. The exchange further states that the PIV should not be viewed as a ''real-time'' update of the NAV per share of each fund because the PIV may not be calculated in the same manner as the NAV, which will be computed once a day, generally at the end of the business day.[15]

The Exchange has represented that, after consulting with various Lead Market Makers that trade exchange-traded funds (''ETFs'') on the Exchange, it believes that market makers will be able to make efficient and liquid markets priced near the PIV as long as an accurate PIV is disseminated every 15 seconds and as long as market makers have knowledge of a fund's means of achieving its investment objective, even without daily disclosure of a fund's underlying portfolio. The Exchange believes that market makers will employ risk-management techniques such as ''statistical arbitrage'' to make efficient markets in an issue of Managed Portfolio Shares without knowledge of a fund's underlying portfolio. The Exchange represents that market makers have indicated to it that, after the first few days of trading, there will be sufficient data to run a statistical analysis that will lead to spreads being tightened substantially around the PIV. The Exchange states that this is similar to certain other existing exchange traded products (for example, ETFs that invest in foreign securities that do not trade during U.S. trading hours).

The Exchange's proposal provides that the Exchange will file separate proposals under Section 19(b) of the Act before listing and trading any series of Managed Portfolio Shares.

B. Description of the Funds

1. The Funds' Investments

The portfolio for each Fund would consist primarily of stocks in the Russell 3000 Index and shares issued by other ETFs that invest primarily in shares of issuers in the Russell 3000 Index (which consists of stocks included in the Russell 1000 Index and the Russell 2000 Index).[16] All exchange-listed equity securities in which the Funds would invest would be listed and traded on U.S. national securities exchanges. Each Fund would target an overall net equity market exposure of between 70% and 130% of the Fund's assets. Each Fund would purchase securities that its portfolio managers believed to be undervalued and would sell short securities that the portfolio managers believed to be overvalued. Under normal market conditions,[17] each Fund's net long equity market exposure would not exceed 130%, and its net short equity market exposure would not exceed 30%, but the portfolio managers might at times exceed these percentages.

The ActiveShares℠ Large Cap Fund. According to the Exchange, the Fund's investment objective would be long-term capital appreciation. Normally, the Fund would invest primarily in securities included in the Russell 1000 Index and ETFs that primarily invest in stocks in the Russell 1000 Index.

The ActiveShares℠ Mid-Cap Fund. According to the Exchange, the Fund's investment objective would be long-term capital appreciation. Normally, the Fund would invest primarily in securities that are included in the Russell 2000 Index and ETFs that primarily invest in stocks in the Russell 2000 Index.

The ActiveShares℠ Multi-Cap Fund. According to the Exchange, the Fund's investment objective would be long-term capital appreciation. The Fund would invest primarily in securities included in the Russell 3000 Index and ETFs that primarily invest in stocks in the Russell 3000 Index.

Other Investments. While each Fund, under normal market conditions, would invest primarily in stocks included in the Russell 3000 Index and ETFs, as described above, each Fund would be able to invest its remaining assets in repurchase agreements and reverse repurchase agreements, high-quality money market instruments, and the securities of other investment companies to the extent allowed by law.

2. Creation of Shares

Each Fund would issue Shares on a continuous basis for cash at NAV, and the Exchange represents that the issuance of Shares would operate in a manner substantially similar to that of other ETFs and, in particular, to that of certain fixed-income ETFs that issue shares solely for cash. Unlike most ETFs, however, Shares would be issued in any amount rather than only in a specified block size (i.e., a Creation Unit). Only Depository Trust Company participants and their customers will be able to acquire Shares at NAV directly from a Fund.

Each Fund would establish a cut-off time (''Order Cut-Off Time'') for orders, and this time could be set earlier than the time at which the fund calculates its NAV. Each Fund would reserve the right to reject any purchase order at any time. Each Fund would be able to impose a transaction fee in connection with the purchase of Shares from the Fund. This fee would be determined by the Fund's adviser, but would not exceed 2%.

3. Redemption of Shares by or Through Authorized Participants

Redemption orders of Redemption Units (currently 50,000 shares)[18] or

[15] Unlike the PIV, which will be based on consolidated last sale information, the NAV per share will be based on the closing price on the primary market for each portfolio security. If there is no closing price for a particular portfolio security, such as when it is the subject of a trading halt, a fund will use fair value pricing. That fair value pricing will be carried over to the next day's PIV until the first trade in that stock is reported.

[16] ETFs would include Investment Company Units (as described in NYSE Arca Equities Rule 5.2(j)(3)); Portfolio Depositary Receipts (as described in NYSE Arca Equities Rule 8.100); and Managed Fund Shares (as described in NYSE Arca Equities Rule 8.600). All ETFs would be listed and traded on a U.S. national securities exchange. The Funds would invest in the securities of ETFs registered under the 1940 Act consistent with the requirements of Section 12(d)(1) of the 1940 Act, or any rule, regulation or order of the Commission or interpretation thereof.

[17] The terms ''normally'' and ''under normal market conditions'' would include, but not be limited to, the absence of extreme volatility or trading halts in the equity markets or the financial markets generally; operational issues causing dissemination of inaccurate market information; or force majeure events such as systems failure, natural or man-made.

[18] Proposed Rule 8.900(c)(4) defines the term ''Redemption Unit'' as a specified number of Managed Portfolio Shares used for determining whether a Retail Investor may redeem for cash. Currently, the size of a Redemption Unit is 50,000 Shares, but this is subject to change.

multiples thereof would have to be placed by or through an authorized participant. The agreement signed by each authorized participant would require the establishment of a blind trust, with the Funds' custodian as trustee, to receive distributions of portfolio securities upon redemption.[19] Accordingly, although redemption proceeds generally would be in the form of portfolio securities, rather than cash, the redeeming authorized participants would never know what securities they had received in exchange for their Shares.[20]

The Exchange has stated that it expects that an authorized participant would instruct the trustee of its blind trust to liquidate redemption securities using market-on-close orders on the date of redemption so that the authorized participant would realize redemption proceeds as close as possible to the Fund's NAV on the redemption date. To allow the Funds' adviser sufficient time to identify the redemption securities and transfer the redemption basket of portfolio securities to the blind trusts, and to permit the trustee adequate time to process liquidation transactions in accordance with the authorized participants' instructions, the Exchange expects each of the Funds to designate an Order Cut-Off Time prior to the time that its NAV is calculated. The redemption basket would consist of the same securities for all authorized participants on any given day, subject to the adviser's ability to make minor adjustments to address odd lots, fractional shares, tradable sizes, or other situations. The redemption securities that the blind trust receives may mirror the portfolio holdings of a fund *pro rata* or, if the adviser determines to reduce one or more portfolio exposures through an in-kind distribution, may constitute only a portion of the holdings that would not be proportionate to the overall portfolio holdings of a Fund.

4. Redemption of Shares Through the Retail Redemption Facility

Retail Investors would be able to place orders to redeem Shares in less than Redemption Unit size by instructing their broker to redeem Shares directly from the Fund for cash at NAV (the ''Retail Redemption Facility''). Each Fund would be able to impose a transaction fee in connection with the redemption of Shares directly with the Fund. This fee would be determined by the Fund's adviser, but would not exceed 2%.

II. Summary of the Comments Received

The Commission received one letter opposing the proposed rule change, and two letters supporting it, including one from the Exchange responding to the opposing commenter's objections. These letters are summarized below.

A. The Gastineau Letter

This commenter opposes approval of the proposal, presenting a number of arguments.[21] The commenter asserts that there is a ''significant risk'' that the Internal Revenue Service (''IRS'') will deny the purported tax benefits of the Funds' distinctive in-kind redemption program.[22] Therefore, the commenter recommends that approval of the proposal be conditioned on the issuer obtaining a favorable IRS determination of the tax treatment through a Private Letter Ruling.[23]

The commenter predicts that, compared to most existing ETFs, the Shares will probably trade with significantly wider bid-ask spreads, with more variable premiums and discounts, or with both, because of what the commenter characterizes as the unreliability of the Funds' proposed method for ensuring secondary market trading efficiency. The commenter states that the Funds would not be disclosing any holdings (except on a quarterly basis) and that the Funds' market makers would have only indirect, and likely imperfect, information about Fund holdings.[24] The commenter argues that effectively arbitraging the Funds will be significantly more difficult than the arbitrage for most existing foreign ETFs.[25] The commenter argues that there is no support for the Exchange's contention that existing ETFs holding portfolios of foreign securities, such as index-based ETFs holding Asian stocks, have demonstrated efficient pricing characteristics even though, because foreign stocks do not trade during the same hours as U.S. ETFs, the ETFs holding foreign stocks do not provide opportunities for riskless arbitrage transactions during much of the trading day.[26] The commenter also cites a draft academic working paper[27] for the propositions that market trading efficiency varies significantly by type and size of ETF; that funds with high share trading volumes, liquid underlying holdings, and efficient arbitrage mechanisms trade with relatively tight bid-ask spreads and more stable premiums and discounts; and that funds lacking these characteristics generally traded with wider spreads and more variable premiums and discounts.

The commenter states that, for a number of reasons, the dissemination of a PIV by the Funds is likely to prove ineffective in ensuring alignment of secondary market prices for the Shares with the values of the underlying portfolios. The commenter asserts that, during periods of rapid market movement, the use of last-sale prices to calculate a PIV, coupled with the dissemination of the PIV only every 15 seconds, will mean that the PIV will be a lagging indicator of actual portfolio values.[28] Additionally, the commenter asserts that the PIV may reflect clearly erroneous values for securities that have not yet opened for trading on a particular business day or that are subject to an intraday interruption in trading.[29] The commenter also criticizes the Exchange's representation that the adviser and calculation agent will use ''commercially reasonable efforts'' to calculate the PIV, arguing that this is a substantially lower standard of care than that applying to NAV calculations for ETFs and mutual funds.[30] The commenter further asserts that no one will stand behind a Fund's PIV to ensure timeliness and accuracy.[31] The commenter asserts that, without a reliable PIV, the Shares cannot and will not trade acceptably in the secondary market.[32]

The commenter predicts that frequent PIV errors will in turn cause ''erroneous share trades'' to be executed.[33] The commenter states that the proposal does not address the treatment of erroneous share trades resulting from a faulty PIV—namely, whether PIV errors and related erroneous trades will be detected by the Exchange, whether such trades would be cancelled, and whether the Exchange would apply a materiality

[19] The custodian would act as trustee of the blind trusts, and the trustee will be paid by the authorized participant a fee negotiated by the funds' adviser on behalf of authorized participants.

[20] In contrast, an authorized participant redeeming Managed Fund Shares generally knows what securities it will receive from the fund, because these securities are disclosed on a daily basis as a ''redemption basket.''

[21] The commenter notes that he has a retained economic interest in a product that may be competitive with Managed Portfolio Shares and states that his views on the Exchange's filing ''may be considered subject to a conflict of interest.'' Gastineau Letter, *supra* note 4, at 1, n.1.

[22] *See id.* at 5.

[23] *See id.*

[24] *See id.* at 8.

[25] *See id.* at 7, 8.

[26] *See id.* at 9.

[27] ''Inefficiencies in the Pricing of Exchange-Traded Funds,'' Antti Petajisto, September 20, 2013, available at *http://www.petajisto.net/.*

[28] *See* Gastineau Letter, *supra* note 4, at 10.

[29] *See id.*

[30] *See id.* at 10–11.

[31] *See id.* at 11.

[32] *See id.*

[33] *See id.* at 13.

standard for cancellations.[34] The commenter argues that, as a condition of approval, the Exchange should be required to monitor the timeliness and accuracy of PIV dissemination and to implement procedures to address trades when an erroneous PIV has been disseminated.[35]

The commenter also predicts that the following elements of the proposed redemption arrangements would introduce additional costs and uncertainties for authorized participants:

- The Funds' custodian would have a monopoly position as the sole eligible provider of trustee services for the blind trust;
- The Funds' adviser, rather than the authorized participant, would negotiate the fees paid to the trustee;
- In contrast to existing ETFs, no authorized participant would have the potential ability to use its market knowledge and market position to enhance arbitrage profits (or offset arbitrage costs) by managing sales of the distributed securities to minimize market impact or to realize prices above the market close; and
- The Funds' custodian, who stands in for the authorized participant in the sale of distributed securities, would have no apparent incentive to sell distributed securities with low market impact or at prices above the close and would experience little or no downside from doing the opposite.

The commenter also asserts that redeeming authorized participants would be exposed to potential costs and risks associated with not being able to control disposition of significantly more concentrated redemption proceeds, and the commenter argues that these extra costs and risks associated with the blind trust arrangement will be passed through to shareholders transacting in the secondary market, reflected as wider bid-ask spreads, more volatile premiums and discounts for the Shares, or both.

The commenter posits that the lack of portfolio transparency would favor market makers and other professional traders over other market participants, such as investors, and the commenter concludes that this disparate treatment is contrary to the principle that all participants should be on an equal footing with respect to knowledge of a fund's holdings.[36] Notwithstanding the public dissemination of the PIV, the commenter argues that market makers and other professional traders would have a significant indirect information advantage over other participants because of their ability to glean information about a Fund's holdings through sophisticated data analysis of changes in the PIV.[37] In particular, the commenter asserts that PIV disclosures might enable market makers and professional traders to uncover a Fund's holdings and trading activity, rendering the Fund susceptible to the dilutive effects of front running.[38] The commenter asserts that, prior to approval, the proposal should be amended to include: (1) A discussion of the steps to be taken to minimize reverse engineering risk; (2) a discussion of how the Funds propose to resolve the conflict between providing market makers with adequate information to support efficient Share trading and protecting against reverse engineering; and (3) representations that the Funds will adequately disclose reverse-engineering risk and the conflicts the Funds face in seeking to provide for efficient market trading and protection against reverse engineering.[39]

The commenter argues that the Commission should not grant the issuer's pending request for exemptive relief under the 1940 Act to maintain early Order Cut-Off Times for Fund redemptions, which are intended to facilitate the timely sale of distributed securities by the blind trusts that receive the proceeds of authorized participant redemptions and the efficient processing of redemptions by retail investors through the Retail Redemption Facility.[40]

The commenter posits that a principal purpose of including direct Share purchases and the Retail Redemption Facility in the proposal is to provide comfort to the Commission and market participants that investors will be able to transact with the Fund at or near NAV whenever secondary market trading prices of shares vary significantly from NAV.[41] The commenter argues that these provisions, as proposed, are inadequate for this purpose because: (1) The Retail Redemption Facility will be available only to a limited set of shareholders and will restricted to redemptions of less than a Redemption Unit of shares; (2) the expected early Order Cut-Off Time for direct share purchases and the Retail Redemption Facility means that an investor's ability to directly purchase or redeem shares for cash will exist for only a portion of each business day; (3) investors who directly purchase and redeem shares will be subject to transaction fees imposed by the Fund of up to 2% and may also be subject to broker-dealer processing fees; (4) self-directed investors may not have adequate information about the available liquidity options to make intelligent choices about how best to buy and sell shares; (5) broker-dealers may not have adequate information to ensure that their customers consistently receive best execution on transactions in shares, given the two distinct liquidity pathways; and (6) broker-dealers may not have or may not develop the systems capabilities necessary to support customer transactions in Funds offering both secondary market trading in shares and direct share purchases and redemptions.[42]

The commenter recommends that the Funds should be required to extend eligibility for the Retail Redemption Facility to all shareholders and that the Order Cut-Off Times for direct purchases of shares and redemptions under the Retail Redemption Facility be established as of the close of the Exchange's regular trading session.[43] The commenter recommends that the Exchange be required to limit trading in shares to broker-dealers that have represented to the Exchange that they have systems in place (a) to accommodate direct purchases and redemptions of Shares on terms no less favorable than secondary market transactions and (b) to ensure best execution of transactions in shares, considering both secondary market trading and direct purchase and redemption options.[44] The commenter also recommends that the broker-dealers trading shares on the Exchange should not be permitted to charge their customers processing fees on direct purchases and redemptions of shares that exceed what they charge the same customers for secondary market trades.[45] Further, the commenter recommends that the Funds should not be permitted to charge transaction fees on direct purchases and redemptions of shares that exceed the associated Fund

[34] *See id.*

[35] *See id.*

[36] *See id.* at 14–15.

[37] *See id.* at 14.

[38] *See id.* at 15. The commenter discusses certain factors determining a fund's susceptibility to reverse engineering using intraday valuations disseminated at 15 second intervals. *See id.*

[39] *See id.* at 15–16.

[40] *See id.* at 16. The commenter alleges that the prospectus contains a number of material misstatements and omissions relating to in-kind redemptions and direct purchases and redemptions. *See id.* at 27–28.

[41] *See id.* at 17.

[42] *See id.* at 18.

[43] *See id.* at 20.

[44] *See id.*

[45] *See id.*

expenses incurred, taking into account the size of a specific transaction.[46]

The commenter asserts that the Funds should: (1) Be required to limit their equity investments to U.S.-exchange-listed stocks with market caps of $5 billion or greater (consistent with the general understanding of large- and medium-cap stocks; a universe of about 700 stocks currently); (2) not be permitted to invest in illiquid assets or debt instruments of non-U.S. issuers; and (3) not be permitted to employ investment leverage or hold short positions.[47]

The commenter notes that the Exchange will permit trading in the Shares between 4:00 a.m. and 8:00 p.m., but that the PIV will only be disseminated during the Core Trading Session of 9:30 a.m. to 4:00 p.m. The commenter asserts that the proposal does not adequately address the significant risk that the prices of shares bought or sold in the Opening Session (4:00 a.m. to 9:30 a.m.) and Late Trading Session (4:00 p.m. to 8:00 p.m.) will vary widely from underlying portfolio values because an updated PIVs would not be available.[48] Therefore, the commenter suggests that trading in shares should be limited to the Exchange's Core Trading Session.[49]

The commenter states that, given the importance of the PIV to the decision-making process of current and prospective Fund investors, all Fund investors should have ongoing access to current PIV values.[50] The commenter suggests that each Fund's current PIV be provided at no charge on a public Web site and made available to the public no later than it is made available to any other market participant.[51] The commenter also suggests that the following information be published on the Funds' Web site:

- *PIV Information*—Real-time PIVs updated continuously throughout the Exchange's Core Trading Session on each business day; updated daily, complete intraday PIV history for at least the 20 most recent trading days (allowing buyers and sellers of shares to compare their executed prices to reported PIVs at the time of their trade execution); updated daily, the prior business day's closing PIV and a calculation showing the relationship of closing PIV to NAV (allowing investors to evaluate PIV to NAV correspondence); and updated daily, a chart and tables showing the frequency distribution and range of the closing PIV-to-NAV ratios for each calendar quarter over the life of the Fund.[52]
- *Closing Price Premiums/Discounts*—Updated daily, the prior business day's closing market price and premium or discount (expressed as a percentage) based on the relationship of the closing market price to NAV; and, updated daily, a chart showing the frequency distribution and range of daily closing price premiums and discounts (expressed as percentages) for each calendar quarter over the life of the Fund.
- *Intraday Estimated Premiums/Discounts*—Updated daily, the prior business day's average, minimum, and maximum intraday estimated premiums and discounts (expressed as percentages) based on PIVs and bid-ask midpoints at each PIV publication time; and, updated daily, a chart showing the frequency distribution and range of daily average, minimum, and maximum intraday estimated premiums and discounts (expressed as percentages) for each calendar quarter over the life of the Fund.[53]
- *Bid-Ask Spreads*—Updated daily, the prior business day's closing bid-ask spread and average, minimum, and maximum intraday bid-ask spreads (expressed as percentages) during the Exchange's Core Trading Session; and, updated daily, a chart showing the frequency distribution and range of daily closing bid/ask spreads and intraday average, minimum, and maximum bid-ask spreads (expressed as percentages) for each calendar quarter over the life of the Fund.[54]
- *Fund Market Exposure and Leverage*—Updated daily, the prior business day's net long or short equity market exposure and amount of investment leverage employed, each expressed as a percentage of Fund net assets; and, updated daily, a chart showing the frequency distribution and range of the Fund's daily net market exposure and leverage percentages for each calendar quarter over the life of the Fund.[55]
- *Purchase and Redemption Transaction Fees*—Updated daily, transaction fees currently applicable to direct purchases of shares, redemptions through the Retail Redemption Facility, and redemption unit redemptions; and, updated daily, a chart showing the frequency distribution and range of transaction fees applicable to direct purchases of shares, redemptions through the Retail Redemption Facility, and redemption unit redemptions for each calendar quarter over the life of the Fund.[56]

Finally, the commenter asserts that, given the fundamental differences in how the Shares may be bought or sold, compared to other ETFs, it is not appropriate for the Funds to be advertised or marketed as ETFs.[57] Therefore, the commenter recommends that the Commission take appropriate steps to ensure that the Exchange, broker-dealers, and market data providers do not describe the Funds as ETFs.[58]

B. The DeCore Letter

The DeCore Letter supports the proposed rule change, asserting that investors would have access for the first time to many different types of active management strategies.[59] The commenter predicts that trading spreads in Managed Portfolio Shares will not be as ''tight'' as trading spreads in the SPY or QQQ (where futures, options, and equity portfolios can be used as a pure hedge), but that a frequent update of the intraday indicative value will allow market maker spreads to be reasonable.[60] The commenter asserts that Managed Portfolio Shares would have the benefit of intraday trading and of creation and redemption at closing NAV and that they would, unlike other ETFs, also offer the additional advantage of allowing investors to create or redeem directly for cash in amounts less than a creation unit.[61]

C. The Exchange's Response Letter

The Exchange asserts that the concerns of the opposing commenter are driven by competitive motives and argues that these concerns should not affect the Commission's decision to approve or disapprove the proposed rule change.[62] Instead, according to the Exchange, different proposals to list and trade actively managed EFTs without daily portfolio disclosure should be

[46] *See id.* at 20–21. The commenter does not agree with the representations made in the proposal relating to certain cost efficiencies with respect to: (1) Fund operating expenses as reflected in their total expense ratios; (2) Fund trading costs and possible cash drag on returns incurred in connection with direct purchases and redemptions of shares; (3) transaction fees imposed by the Fund on direct purchases and redemptions of shares; and (4) processing fees paid by shareholders to their broker-dealers on direct purchases and redemptions of shares. *See id.* at 21–23.

[47] *See id.* at 24.

[48] *See id.*

[49] *See id.*

[50] *See id.* at 25.

[51] *See id.*

[52] *See id.* at 26.

[53] *See id.*

[54] *See id.*

[55] *See id.* at 26–27.

[56] *See id.* at 27.

[57] *See id.* at 28–29.

[58] *See id.*

[59] *See* DeCore Letter, *supra* note 7, at 1.

[60] *See id.*

[61] *See id.* at 1–2.

[62] *See* Response Letter, *supra* note 7, at 5.

assessed on their individual merits and risks.[63] The Exchange also asserts that, assuming investor protection concerns are adequately addressed, investors and the marketplace can only benefit from listing and trading of a variety of products with different structures, positing that competitive forces will ultimately decide the success of failure of such initiatives.[64]

More specifically, the Exchange states that the opposing commenter offers no direct support for his doubts regarding the assertions by lead market makers (''LMMs'') about efficient secondary market trading, and the Exchange asserts that these LMMs are uniquely suited to prospectively assess the effectiveness of arbitrage in the shares.[65] The Exchange reiterates that market makers have indicated that the available information regarding the Shares would be sufficient for arbitrage and hedging purposes.[66] Additionally, the Exchange states that, based on discussions with market makers, it expects that market makers would agree to act as LMMs in the Shares and believes that no market maker would accept an LMM assignment if it were not entirely comfortable in its ability to hedge its positions.[67] The Exchange also reiterates that its existing trading surveillance procedures would be applied to trading in the Shares and that such procedures are adequate to properly deter and detect violations of Exchange rules and federal securities laws applicable to trading on the Exchange.[68]

The Exchange agrees with the opposing commenter that an accurate PIV would be essential for trading in the Shares, but asserts that the commenter offers no support for the assertion that the PIV would be unreliable.[69] The Exchange reiterates that market makers have indicated that, after the first few days of trading, there would be sufficient data to run a statistical analysis that would lead to differences between the Share price of the ETF and the PIV being tightened substantially.[70] The Exchange states that it has no reason to believe that the PIV, which would be calculated using methodology substantially similar to that used in the calculation of all other ETF intraday indicative values, would be inherently unreliable.[71] The Exchange reiterates its view that market participants would accept the PIV as a reliable, indicative real-time value because (1) the PIV would be calculated and disseminated based on a Fund's actual portfolio holdings; (2) the securities in which the Funds plan to invest are generally highly liquid and actively traded and therefore generally have accurate real-time pricing available; and (3) market participants would have a daily opportunity to evaluate whether the PIV at or near the close of trading was indeed predictive of the actual NAV.[72]

Responding to the opposing commenter's suggestion that the Exchange be required to institute a program to monitor the timeliness and accuracy of disseminated PIVs and to adopt appropriate procedures for the treatment of trades executed during periods when erroneous PIVs were disseminated, the Exchange reiterates that it has no reason to believe that the PIVs would be inherently unreliable, and therefore it does not propose to institute any additional monitoring programs. Instead, the Exchange states that it would rely on its existing surveillance systems to monitor trading in the Shares.[73] The Exchange also states that all exchanges may cancel trades only according to their respective rules and that, while its rule applicable to trade cancellations (NYSE Area Equities Rule 7.10) would apply to trading in the Shares, that rule neither addresses trade cancellations in the event erroneous PIVs are disseminated nor provides the Exchange discretion to cancel trades.[74]

In response to the opposing commenter's concerns about the adequacy of the risks included in the Exchange's Information Bulletin (''Bulletin'')—which would provide Exchange members with key information about the Shares—and the commenter's suggestion that trading in the Shares be limited to the Core Trading Session, the Exchange states that: (1) Its surveillance procedures are operative during all trading sessions and are adequate to monitor trading in the Shares; (2) that it has no reason to discount the assertions of market makers regarding their ability to make efficient markets during all trading sessions; and (3) it will ensure that the Bulletin would adequately address the special characteristics and risks associated with trading in the Shares.[75]

In response to the opposing commenter's concern that market professionals could reverse-engineer the holdings underlying the Shares and thereby obtain an advantage over retail customers, the Exchange states that the following information would be publicly available to market professionals and retail investors alike: A PIV, disseminated every 15 seconds; an NAV, disseminated daily after the close; and the national best bid and offer and last trade for the Shares, disseminated in real-time through the Consolidated Quotation System and the Consolidated Tape.[76] The Exchange states that, as with other ETFs, any independent view that market participants might have about the composition of the fund holdings and the value of those holdings would be included in the prices at which those participants would be willing to trade the product.[77]

Responding to the commenter's recommendations that the Funds extend eligibility for the Retail Redemption Facility to all shareholders, that the Order Cut-off Times for direct purchases of Shares and redemption under the Retail Redemption Facility be established as the close of the Exchange's Regular Trading Session, and that trading in the Shares be limited to broker-dealers that make certain representations to the Exchange regarding direct purchases and redemptions, the Exchange asserts that the process proposed in the Notice is consistent with the applicable provisions of the Act.[78]

Responding to the commenter's recommendation that the PIV be posted on each Fund's Web site in real time (along with other information), the Exchange states that such real-time Web site disclosure of an indicative value is not required of other ETFs.[79] The Exchange states that the PIV is designed to provide guidance regarding variances between the prior day's closing prices and intraday changes in the value of the underlying portfolio.[80] The pricing of the Shares themselves would be disseminated in real time through the Consolidated Quotation System, according to the Exchange.[81]

Finally, the Exchange argues that the opposing commenter's arguments regarding the following are not relevant to the Commission's determination, under Section 19(b) of the Act, whether the Exchange's proposal is consistent with the Act: (1) Tax treatment of in-

[63] *See id.*
[64] *See id.*
[65] *See id.* at 2.
[66] *See id.*
[67] *See id.*
[68] *See id.*
[69] *See id.*
[70] *See id.*
[71] *See id.*
[72] *See id.*
[73] *See id.* at 3.
[74] *See id.*
[75] *See id.*
[76] *See id.*
[77] *See id.*
[78] *See id.* at 4.
[79] *See id.*
[80] *See id.*
[81] *See id.*

kind distributions through the blind trust; (2) early Order Cut-Off Times for redemption; (3) cost considerations; [82] (4) the commenter's recommendation to curtail the permitted investments of the funds; and (5) prospectus disclosures.[83]

III. Proceedings to Determine Whether to Approve or Disapprove SR–NYSEArca–2014–10 and Grounds for Disapproval Under Consideration

The Commission is instituting proceedings pursuant to Section 19(b)(2)(B) of the Act [84] to determine whether the proposed rule change should be approved or disapproved. Institution of such proceedings is appropriate at this time in view of the legal and policy issues raised by the proposed rule change, as discussed below. Institution of proceedings does not indicate that the Commission has reached any conclusions with respect to any of the issues involved. Rather, as described below, the Commission seeks and encourages interested persons to provide comments on the proposed rule change.

Pursuant to Section 19(b)(2)(B) of the Act,[85] the Commission is providing notice of the grounds for disapproval under consideration. The Commission is instituting proceedings to allow for additional analysis of the proposed rule change's consistency with Section 6(b)(5) of the Act, which requires, among other things, that the rules of a national securities exchange be ''designed to prevent fraudulent and manipulative acts and practices, to promote just and equitable principles of trade,'' and ''to protect investors and the public interest.'' [86]

IV. Procedure: Request for Written Comments

The Commission requests that interested persons provide written submissions of their views, data, and arguments with respect to the issues identified above, as well as any other concerns they may have with the proposal. In particular, the Commission invites the written views of interested persons concerning whether the proposal is consistent with Section 6(b)(5) or any other provision of the Act, or the rules and regulations thereunder. Although there do not appear to be any issues relevant to approval or disapproval which would be facilitated by an oral presentation of views, data, and arguments, the Commission will consider, pursuant to Rule 19b–4, any request for an opportunity to make an oral presentation.[87]

Interested persons are invited to submit written data, views, and arguments regarding whether the proposal should be approved or disapproved by June 23, 2014. Any person who wishes to file a rebuttal to any other person's submission must file that rebuttal by July 7, 2014.

The Commission asks that commenters address the sufficiency of the Exchange's statements in support of the proposal, in addition to any other comments they may wish to submit about the proposed rule change. In particular, the Commission seeks comment on the statements of the Exchange contained in the Notice,[88] the issues raised by the opposing commenter, the Exchange's responses to those issues, and any other issues raised by the listing and trading of an actively managed ETF that does not make daily public disclosure of its investment portfolio.

Comments may be submitted by any of the following methods:

Electronic Comments

- Use the Commission's Internet comment form (*http://www.sec.gov/rules/sro.shtml*); or
- Send an email to *rule-comments@sec.gov.* Please include File Number SR–NYSEArca–2014–10 on the subject line.

Paper Comments

- Send paper comments in triplicate to Secretary, Securities and Exchange Commission, 100 F Street NE., Washington, DC 20549–1090.

All submissions should refer to File Numbers SR–NYSEArca–2014–10. This file number should be included on the subject line if email is used. To help the Commission process and review your comments more efficiently, please use only one method. The Commission will post all comments on the Commission's Internet Web site (*http://www.sec.gov/rules/sro.shtml*). Copies of the submission, all subsequent amendments, all written statements with respect to the proposed rule change that are filed with the Commission, and all written communications relating to the proposed rule change between the Commission and any person, other than those that may be withheld from the public in accordance with the provisions of 5 U.S.C. 552, will be available for Web site viewing and printing in the Commission's Public Reference Room, 100 F Street NE., Washington, DC 20549, on official business days between the hours of 10:00 a.m. and 3:00 p.m. Copies of these filings also will be available for inspection and copying at the principal office of the Exchange. All comments received will be posted without change; the Commission does not edit personal identifying information from submissions. You should submit only information that you wish to make available publicly. All submissions should refer to File Number SR–NYSEArca–2014–10 and should be submitted on or before June 23, 2014. Rebuttal comments should be submitted by July 7, 2014.

For the Commission, by the Division of Trading and Markets, pursuant to delegated authority.[89]

Kevin M. O'Neill,

Deputy Secretary.

[FR Doc. 2014–12647 Filed 5–30–14; 8:45 am]

BILLING CODE 8011–01–P

[82] The Exchange argues that limiting broker-dealer processing fees on direct purchases and redemptions of Shares would require Commission rulemaking. *See id.* at 4.

[83] *See id.* at 4–5.

[84] 15 U.S.C. 78s(b)(2)(B).

[85] *Id.*

[86] 15 U.S.C. 78f(b)(5).

[87] Section 19(b)(2) of the Act, as amended by the Securities Act Amendments of 1975, Public Law 94–29 (June 4, 1975), grants the Commission flexibility to determine what type of proceeding—either oral or notice and opportunity for written comments—is appropriate for consideration of a particular proposal by a self-regulatory organization. *See* Securities Act Amendments of 1975, Senate Comm. on Banking, Housing & Urban Affairs, S. Rep. No. 75, 94th Cong., 1st Sess. 30 (1975).

[88] *Supra,* note 3.

[89] 17 CFR 200.30–3(a)(57).

SECURITIES AND EXCHANGE COMMISSION

[Release No. 34–72252; File No. SR–NYSEMKT–2014–46]

Self-Regulatory Organizations; NYSE MKT LLC; Notice of Filing and Immediate Effectiveness of Proposed Rule Change Amending NYSE MKT Rule 13—Equities to Introduce a New ''Retail'' Modifier for Orders and to Make Related, Administrative Changes to Its Price List

May 27, 2014.

Pursuant to Section 19(b)(1) [1] of the Securities Exchange Act of 1934 (''Act'') [2] and Rule 19b–4 thereunder,[3] notice is hereby given that, on May 13, 2014, NYSE MKT LLC (''NYSE MKT'' or ''Exchange'') filed with the Securities and Exchange Commission (''Commission'') the proposed rule change as described in Items I and II below, which Items have been prepared by the self-regulatory organization. The Commission is publishing this notice to

[1] 15 U.S.C. 78s(b)(1).

[2] 15 U.S.C. 78a.

[3] 17 CFR 240.19b–4.

solicit comments on the proposed rule change from interested persons.

I. Self-Regulatory Organization's Statement of the Terms of Substance of the Proposed Rule Change

The Exchange proposes to amend NYSE MKT Rule 13—Equities to introduce a new ''retail'' modifier for orders. The Exchange also proposes to make related, administrative changes to its Price List that would not impact transaction pricing on the Exchange. The text of the proposed rule change is available on the Exchange's Web site at *www.nyse.com,* at the principal office of the Exchange, and at the Commission's Public Reference Room.

II. Self-Regulatory Organization's Statement of the Purpose of, and the Statutory Basis for, the Proposed Rule Change

In its filing with the Commission, the self-regulatory organization included statements concerning the purpose of, and basis for, the proposed rule change and discussed any comments it received on the proposed rule change. The text of those statements may be examined at the places specified in Item IV below. The Exchange has prepared summaries, set forth in sections A, B, and C below, of the most significant parts of such statements.

A. Self-Regulatory Organization's Statement of the Purpose of, and the Statutory Basis for, the Proposed Rule Change

1. Purpose

The Exchange proposes to amend NYSE MKT Rule 13—Equities to introduce a new ''retail'' modifier for orders. The Exchange also proposes to make related, administrative changes to its Price List that would not impact transaction pricing on the Exchange.

An order designated with a ''retail'' modifier would be an agency order or a riskless principal order that meets the criteria of Financial Industry Regulatory Authority, Inc. (''FINRA'') Rule 5320.03 that originates from a natural person and is submitted to the Exchange by a member organization, provided that no change is made to the terms of the order with respect to price or side of market and the order does not originate from a trading algorithm or any other computerized methodology.[4] An order with a ''retail'' modifier would be separate and distinct from a ''Retail Order'' within the Retail Liquidity Program under Rule 107C—Equities, despite the characteristics being substantially the same.[5]

The Exchange has separately proposed transaction pricing related to orders designated as ''retail'' that add liquidity to the Book.[6] A member organization that wishes to be eligible for such proposed pricing would be required to designate its orders as ''retail,'' as described herein.[7] However, a member or member organization that does not wish to be eligible for the proposed pricing would be free to choose not to designate orders as ''retail.'' Both the proposed ''retail'' modifier and the existing ''Retail Order'' within the Retail Liquidity Program, along with pricing related to each, are designed to incentivize the submission of additional retail order flow to a public market, like the Exchange. A ''Retail Order'' is eligible for a credit for removing existing, price-improved liquidity from the Exchange. In contrast, an order designated with the proposed ''retail'' modifier would be eligible for a credit for adding liquidity to the Exchange.

A member organization would be required to designate an order as ''retail'' in a form and/or manner prescribed by the Exchange.[8] Currently, a member organization may designate an order as ''retail'' either by means of a specific tag in the order entry message, as with other order modifiers, or alternatively by designating a particular member or member organization mnemonic used at the Exchange as a ''retail mnemonic.''[9] To submit a ''retail'' order, a member organization must also submit an attestation, in a form prescribed by the Exchange, that substantially all orders submitted as ''retail'' will qualify as such.[10]

A member organization must have written policies and procedures reasonably designed to assure that it will only designate orders as ''retail'' if all requirements are met.[11] Such written policies and procedures must require the member organization to (i) exercise due diligence before entering a ''retail'' order to assure that entry as a ''retail'' order is in compliance with the applicable requirements, and (ii) monitor whether orders entered as ''retail'' orders meet the applicable requirements. If a member organization represents ''retail'' orders from another broker-dealer customer, the member organization's supervisory procedures must be reasonably designed to assure that the orders it receives from such broker-dealer customer that it designates as ''retail'' orders meet the definition of a ''retail'' order. The member organization must (i) obtain an annual written representation, in a form acceptable to the Exchange, from each broker-dealer customer that sends it orders to be designated as ''retail'' orders that entry of such orders as ''retail'' orders will be in compliance with the applicable requirements; and

[4] *See* paragraph (a) of the proposed ''retail'' modifier text under Rule 13—Equities, which, except for the non-applicability of the Retail Member Organization (''RMO'') aspect, would be the same as the definition of ''Retail Order'' for the Retail Liquidity Program under Rule 107C(a)(3)—Equities.

[5] The Exchange currently operates the Retail Liquidity Program as a pilot program that is designed to attract additional retail order flow to the Exchange for Exchange-traded securities (including but not limited to Exchange-listed securities and securities listed on the Nasdaq Stock Market, LLC (''NASDAQ'') traded pursuant to unlisted trading privileges). *See* Securities Exchange Act Release No. 67347 (July 3, 2012), 77 FR 40673 (July 10, 2012) (SR–NYSEAmex–2011–84). Retail order flow is submitted by an RMO through the Retail Liquidity Program as a distinct order type called a ''Retail Order,'' which is defined in Rule 107C(a)(3)—Equities in the same manner as the requirements under paragraph (a) of the proposed ''retail'' modifier text. RMO is defined in Rule 107C(a)(2)—Equities as a member organization (or a division thereof) that has been approved by the Exchange under Rule 107C—Equities to submit Retail Orders. A Retail Order is an Immediate or Cancel Order. *See* Rule 107C(a)(3)—Equities. *See also* Rule 107C(k)—Equities for a description of the manner in which a member or member organization may designate how a Retail Order will interact with available contra-side interest. An execution of a ''Retail Order'' is always considered to remove liquidity, whether against contra-side interest in the Retail Liquidity Program or against the Book. The proposed ''retail'' modifier is designed to identify retail order flow that adds liquidity to the Exchange.

[6] *See* Securities Exchange Act Release No. 71878 (April 4, 2014), 79 FR 19936 (April 10, 2014) (SR–NYSEMKT–2014–25). Specifically, a credit of $0.0030 per share would be available for executions of orders designated as ''retail'' that add liquidity on the Book. Existing rates in the Price List would apply to executions of Mid-Point Passive Liquidity (''MPL'') Orders (e.g., $0.0016 per share). A Supplemental Liquidity Provider (''SLP'') market maker (''SLMM'') could designate orders as ''retail'' and be eligible for the proposed new credit.

[7] The Price List currently includes references to Rule 107C—Equities with respect to the pricing applicable to orders designated as ''retail.'' The Exchange proposes to replace those references with references to the proposed ''retail'' modifier under Rule 13—Equities. These proposed changes would merely be administrative and would not impact transaction pricing on the Exchange.

[8] *See* paragraph (b) of the proposed ''retail'' modifier text under Rule 13—Equities.

[9] This would be similar to the manner in which an Exchange Trading Permit (''ETP'') Holder on NYSE Arca Equities, Inc. (''NYSE Arca Equities'') may designate orders as ''retail'' outside of the NYSE Arca Equities Retail Liquidity Program. *See, e.g.,* Securities Exchange Act Release No. 68322 (November 29, 2012), 77 FR 72425 (December 5, 2012) (SR–NYSEArca–2012–129).

[10] *See* paragraph (c) of the proposed ''retail'' modifier text under Rule 13—Equities, which would be the same as the attestation requirement for the Retail Liquidity Program under Rule 107C(b)(2)(C)—Equities.

[11] *See* paragraph (d) of the proposed ''retail'' modifier text under Rule 13—Equities, which would be the same as the policies and procedures requirement for the Retail Liquidity Program under Rule 107C(b)(6)—Equities.

(ii) monitor whether its broker-dealer customer's ''retail'' order flow meets the applicable requirements.

If a member organization designates orders submitted to the Exchange as ''retail'' orders and the Exchange determines, in its sole discretion, that such orders fail to meet any of the applicable requirements, the Exchange may disqualify a member organization from submitting ''retail'' orders.[12] This could occur, for example, if a member organization (i) designates greater than a de minimis quantity of orders to the Exchange as ''retail'' that fail to meet any of the applicable requirements, (ii) fails to make the required attestation to the Exchange, or (iii) fails to maintain the required policies and procedures. The Exchange would determine if and when a member organization is disqualified from submitting ''retail'' orders and, when disqualification determinations are made, the Exchange would provide a written disqualification notice to the member organization.[13] A member organization that is disqualified may (A) appeal such disqualification, as provided below, and/or (B) resubmit the attestation described above 90 days after the date of the disqualification notice from the Exchange.[14]

If a member organization disputes the Exchange's decision to disqualify it from submitting ''retail'' orders, the member organization may request, within five business days after notice of the decision is issued by the Exchange, that the ''retail'' order ''Hearing Panel'' review the decision to determine if it was correct.[15] The Hearing Panel would consist of the Exchange's Chief Regulatory Officer (''CRO''), or a designee of the CRO, and two officers of the Exchange designated by the Chief Executive Officer of IntercontinentalExchange Group, Inc. (''ICE Group'').[16] The Hearing Panel would review the facts and render a decision within the time frame prescribed by the Exchange.[17] The Hearing Panel may overturn or modify an action taken by the Exchange, and a determination by the Hearing Panel would constitute final action by the Exchange.[18]

The proposed change is not otherwise intended to address any other issues, and the Exchange is not aware of any problems that members and member organizations would have in complying with the proposed change.

2. Statutory Basis

The Exchange believes that the proposed rule change is consistent with Section 6(b) of the Act,[19] in general, and furthers the objectives of Sections 6(b)(5) of the Act,[20] in particular, because it is designed to prevent fraudulent and manipulative acts and practices, to promote just and equitable principles of trade, to foster cooperation and coordination with persons engaged in regulating, clearing, settling, processing information with respect to, and facilitating transactions in securities, to remove impediments to, and perfect the mechanisms of, a free and open market and a national market system and, in general, to protect investors and the public interest and because it is not designed to permit unfair discrimination between customers, issuers, brokers, or dealers.

The Exchange believes that the proposed change is consistent with these principles because it would increase competition among execution venues and encourage additional liquidity by creating a process, and related transaction pricing pursuant to a separate proposal,[21] that would incentivize the submission of additional retail order flow to a public market. The Exchange notes that a significant percentage of the orders of individual investors are executed over-the-counter.[22] The Exchange believes that it is appropriate to create a process to bring additional retail order flow to a public market and that such a process would contribute to perfecting the mechanisms of a free and open market and a national market system.

The Exchange understands that Section 6(b)(5) of the Act prohibits an exchange from establishing rules that treat market participants in an unfairly discriminatory manner. However, Section 6(b)(5) of the Act does not prohibit exchange members or other broker-dealers from discriminating, so long as their activities are otherwise consistent with the federal securities laws. While the Exchange believes that markets and price discovery optimally function through the interactions of diverse flow types, it also believes that growth in internalization has required differentiation of retail order flow from other order flow types. The differentiation proposed herein by the Exchange is not designed to permit unfair discrimination, but instead to promote a competitive process around retail executions. The Exchange operating a process like the one proposed herein on an exchange market would result in greater transparency and competitiveness surrounding executions of retail flow.

[12] *See* paragraph (e)(1) of the proposed ''retail'' modifier text under Rule 13—Equities, which would be substantially the same as the provision for the Retail Liquidity Program under Rule 107C(h)(1)—Equities.

[13] *See* paragraph (e)(2) of the proposed ''retail'' modifier text under Rule 13—Equities, which would be substantially the same as the provision for the Retail Liquidity Program under Rule 107C(h)(2)—Equities.

[14] *See* paragraph (e)(3) of the proposed ''retail'' modifier text under Rule 13—Equities, which would be substantially the same as the provision for the Retail Liquidity Program under Rule 107C(h)(3)—Equities. Rule 107C(h)(3)—Equities currently refers to ''reapplication,'' which relates to the RMO status within the Retail Liquidity Program, but which would not be applicable to designating orders as ''retail.''

[15] *See* paragraph (f)(1) of the proposed ''retail'' modifier text under Rule 13—Equities, which would be substantially the same as the provision for the Retail Liquidity Program under Rule 107C(i)(1)—Equities.

[16] *See* paragraph (f)(2) of the proposed ''retail'' modifier text under Rule 13—Equities, which would be substantially the same as the provision for the Retail Liquidity Program under Rule 107C(i)(2)—Equities. Rule 107C(i)(2)—Equities currently refers to the ''Co-Head of U.S. Listings and Cash Execution,'' which is a legacy title that predates the corporation transaction involving NYSE Euronext (''NYSE Euronext'') and IntercontinentalExchange, Inc. (''ICE''). *See* Securities Exchange Act Release No. 70210 (August 15, 2013), 78 FR 51758 (August 21, 2013) (SR–NYSE–2013–42; SR–NYSEMKT–2013–50; SR–NYSEArca–2013–62) (Order Granting Approval of Proposed Rule Change Relating to a Corporate Transaction in Which NYSE Euronext Will Become a Wholly-Owned Subsidiary of IntercontinentalExchange Group, Inc.). The Exchange anticipates updating the existing reference in Rule 107C(i)(2)—Equities to the ''Co-Head of U.S. Listings and Cash Execution'' in a separate proposed rule change so that it similarly references the ''Chief Executive Officer of ICE Group,'' as is proposed herein.

[17] *See* paragraph (f)(3) of the proposed ''retail'' modifier text under Rule 13—Equities, which would be the same as the provision for the Retail Liquidity Program under Rule 107C(i)(3)—Equities.

[18] *See* paragraph (f)(4) of the proposed ''retail'' modifier text under Rule 13—Equities, which would be the same as the provision for the Retail Liquidity Program under Rule 107C(i)(4)—Equities.

[19] 15 U.S.C. 78f(b).

[20] 15 U.S.C. 78f(b)(5).

[21] *See* SR–NYSEMKT–2014–25, *supra* note 6.

[22] *See* Concept Release on Equity Market Structure, Securities Exchange Act Release No. 61358 (January 14, 2010), 75 FR 3594 (January 21, 2010) (''Concept Release'') (noting that dark pools and internalizing broker-dealers executed approximately 25.4% of share volume in September 2009). *See also* Mary Jo White, Focusing on Fundamentals: The Path to Address Equity Market Structure (Speech at the Security Traders Association 80th Annual Market Structure Conference, Oct. 2, 2013) (available on the Security and Exchange Commission (''Commission'') Web site) (''White Speech''); Mary L. Schapiro, Strengthening Our Equity Market Structure (Speech at the Economic Club of New York, Sept. 7, 2010) (available on the Commission's Web site) (''Schapiro Speech''). In her speech, Chair White noted a steadily increasing percentage of trading that occurs in ''dark'' venues, which appear to execute more than half of the orders of long-term investors. Similarly, in her speech, only three years earlier, Chair Schapiro noted that nearly 30 percent of volume in U.S.-listed equities was executed in venues that do not display their liquidity or make it generally available to the public and the percentage was increasing nearly every month.

The Exchange believes that the proposed change is designed to prevent fraudulent and manipulative acts and practices and to promote just and equitable principles of trade because it would contribute to maintaining or increasing the proportion of retail flow in exchange-listed securities that are executed on a registered national securities exchange (rather than relying on certain available off-exchange execution methods). The proposed change also would protect investors and the public interest because it would contribute to investors' confidence in the fairness of their transactions and because it would benefit all investors by deepening the Exchange's liquidity pool, supporting the quality of price discovery, promoting market transparency and improving investor protection.

The Exchange also believes that the proposed change would remove impediments to, and perfect the mechanisms of, a free and open market and a national market system because it would be similar to the manner in which NASDAQ provides a process for ''Designated Retail Orders'' that provide liquidity.[23]

Orders designated as ''retail'' would increase the pool of robust liquidity available on the Exchange, thereby contributing to the quality of the Exchange's market and to the Exchange's status as a premier destination for liquidity and order execution. The Exchange believes that, because retail flow is likely to reflect long-term investment intentions, it promotes price discovery and dampens volatility. Accordingly, the presence of retail flow on the Exchange has the potential to benefit all market participants. For this reason, the Exchange believes that encouraging greater retail participation on the Exchange would facilitate transactions in securities while also protecting investors and the public interest.

The Exchange believes that the process for designating orders as ''retail'' and the requirements surrounding such designations, such as attestations and procedures, are consistent with the Act because they would reasonably ensure that substantially all of those orders would satisfy the applicable requirements. These processes and requirements are also consistent with the Act because they are substantially similar to those in effect on the Exchange for the Retail Liquidity Program and on NYSE Arca Equities related to pricing for certain retail flow.[24] More specifically, the Exchange understands that some members and member organizations represent both retail flow as well as other agency and riskless principal flow that may not meet the strict requirements proposed herein. The Exchange further understands that limitations in order management systems and routing networks used by such members and member organizations may make it infeasible for them to isolate 100% of retail flow from other agency or riskless principal, non-retail flow that they would direct to the Exchange. Unable to make the categorical attestation required by the Exchange, some members and member organizations may not attempt to utilize the proposed new modifier, notwithstanding that they have substantial retail flow. The Exchange believes that it is consistent with the Act to permit a de minimis amount of orders to be designated as ''retail,'' despite not satisfying the applicable requirements, because it would allow for enough flexibility to accommodate member and member organization system limitations while still reasonably ensuring that no more than a de minimis amount of orders submitted to the Exchange would not satisfy the applicable requirements. This is also consistent with the Act because it will reasonably ensure that similarly situated members and member organizations that have only slight differences in the capability of their systems would be able to equally utilize the modifier for orders designated as ''retail.''

The Price List currently includes references to Rule 107C—Equities with respect to the pricing applicable to orders designated as ''retail.'' The Exchange believes that it is consistent with the Act to replace those references with references to the proposed ''retail'' modifier under Rule 13—Equities because this would avoid potential confusion between orders designated as ''retail'' outside of the Retail Liquidity Program and ''Retail Orders'' within the Retail Liquidity Program. This would also be consistent with the Act because the proposed new ''retail'' modifier could be utilized by all members and member organizations to identify retail flow outside of the Retail Liquidity Program and thereby differentiate such flow from Retail Orders within the Retail Liquidity Program.

Finally, the Exchange believes that it is subject to significant competitive forces, as described below in the Exchange's statement regarding the burden on competition.

For these reasons, the Exchange believes that the proposal is consistent with the Act.

B. Self-Regulatory Organization's Statement on Burden on Competition

In accordance with Section 6(b)(8) of the Act,[25] the Exchange believes that the proposed rule change would not impose any burden on competition that is not necessary or appropriate in furtherance of the purposes of the Act. Instead, the Exchange believes that the proposed change would increase competition among execution venues and encourage additional liquidity. In this regard, the Exchange believes that the transparency and competitiveness of attracting additional executions on an exchange market would encourage competition. The proposed change would also permit the Exchange to compete with other markets, including NASDAQ, which similarly provides a process for ''Designated Retail Orders'' that provide liquidity.[26] The proposal would also promote competition on the Exchange because the ability to designate an order as ''retail'' would be available to all members and member organizations that submit qualifying orders and satisfy the other related requirements.

C. Self-Regulatory Organization's Statement on Comments on the Proposed Rule Change Received From Members, Participants, or Others

No written comments were solicited or received with respect to the proposed rule change.

III. Date of Effectiveness of the Proposed Rule Change and Timing for Commission Action

The Exchange has filed the proposed rule change pursuant to Section 19(b)(3)(A)(iii) of the Act[27] and Rule 19b–4(f)(6) thereunder.[28] Because the proposed rule change does not: (i) Significantly affect the protection of investors or the public interest; (ii) impose any significant burden on competition; and (iii) become operative prior to 30 days from the date on which it was filed, or such shorter time as the Commission may designate, if consistent with the protection of

[23] *See* NASDAQ Rule 7018.

[24] *See supra* note 9.

[25] 15 U.S.C. 78f(b)(8).

[26] *See supra* note 233.

[27] 15 U.S.C. 78s(b)(3)(A)(iii).

[28] 17 CFR 240.19b–4(f)(6). In addition, Rule 19b–4(f)(6) requires the Exchange to give the Commission written notice of the Exchange's intent to file the proposed rule change, along with a brief description and text of the proposed rule change, at least five business days prior to the date of filing of the proposed rule change, or such shorter time as designated by the Commission. The Commission has waived that requirement for this proposed rule change.

investors and the public interest, the proposed rule change has become effective pursuant to Section 19(b)(3)(A) of the Act and Rule 19b–4(f)(6)(iii) thereunder.

A proposed rule change filed under Rule 19b–4(f)(6)[29] normally does not become operative prior to 30 days after the date of the filing. However, pursuant to Rule 19b–4(f)(6)(iii),[30] the Commission may designate a shorter time if such action is consistent with the protection of investors and the public interest. The Exchange has asked the Commission to waive the 30-day operative delay so that the proposal may become operative immediately upon filing. The Commission believes that waiving the 30-day operative delay is consistent with the protection of investors and the public interest because it would allow the Exchange immediately to adopt clear and transparent criteria concerning the submission of orders that are designated as ''retail'' and eligible to receive fee credits under the Exchange's current fee schedule. Accordingly, the Commission hereby grants the Exchange's request and designates the proposal operative upon filing.[31]

At any time within 60 days of the filing of this proposed rule change, the Commission summarily may temporarily suspend this rule change if it appears to the Commission that such action is necessary or appropriate in the public interest, for the protection of investors, or otherwise in furtherance of the purposes of the Act.

IV. Solicitation of Comments

Interested persons are invited to submit written data, views, and arguments concerning the foregoing, including whether the proposed rule change is consistent with the Act. Comments may be submitted by any of the following methods:

Electronic Comments

- Use the Commission's Internet comment form (*http://www.sec.gov/rules/sro.shtml*); or
- Send an email to *rule-comments@sec.gov.* Please include File Number SR–NYSEMKT–2014–46 on the subject line.

Paper Comments

- Send paper comments in triplicate to Secretary, Securities and Exchange Commission, 100 F Street NE., Washington, DC 20549–1090.

All submissions should refer to File Number SR–NYSEMKT–2014–46. This file number should be included on the subject line if email is used. To help the Commission process and review your comments more efficiently, please use only one method. The Commission will post all comments on the Commission's Internet Web site (*http://www.sec.gov/rules/sro.shtml*). Copies of the submission, all subsequent amendments, all written statements with respect to the proposed rule change that are filed with the Commission, and all written communications relating to the proposed rule change between the Commission and any person, other than those that may be withheld from the public in accordance with the provisions of 5 U.S.C. 552, will be available for Web site viewing and printing in the Commission's Public Reference Section, 100 F Street NE., Washington, DC 20549–1090. Copies of the filing will also be available for Web site viewing and printing at the NYSE's principal office and on its Internet Web site at *www.nyse.com.* All comments received will be posted without change; the Commission does not edit personal identifying information from submissions. You should submit only information that you wish to make available publicly. All submissions should refer to File Number SR–NYSEMKT–2014–46 and should be submitted on or before June 23, 2014.

For the Commission, by the Division of Trading and Markets, pursuant to delegated authority.[32]

Kevin M. O'Neill,

Deputy Secretary.

[FR Doc. 2014–12644 Filed 5–30–14; 8:45 am]

BILLING CODE 8011–01–P

[29] 17 CFR 240.19b–4(f)(6).

[30] 17 CFR 240.19b–4(f)(6)(iii).

[31] For purposes only of waiving the 30-day operative delay, the Commission has considered the proposed rule's impact on efficiency, competition, and capital formation. *See* 15 U.S.C. 78c(f).

[32] 17 CFR 200.30–3(a)(12).

SECURITIES AND EXCHANGE COMMISSION

[Release No. 34–72254; File No. SR–ISE–2014–26]

Self-Regulatory Organizations; International Securities Exchange, LLC; Notice of Filing and Immediate Effectiveness of Proposed Rule Change Regarding Complex Orders

May 27, 2014.

Pursuant to Section 19(b)(1) of the Securities Exchange Act of 1934 (the ''Act''),[1] and Rule 19b–4 thereunder,[2] notice is hereby given that on May 20, 2014 the International Securities Exchange, LLC (the ''Exchange'' or the ''ISE'') filed with the Securities and Exchange Commission (''Commission'') the proposed rule change as described in Items I, II, and III below, which items have been prepared by the Exchange. The Commission is publishing this notice to solicit comments on the proposed rule change from interested persons.

I. Self-Regulatory Organization's Statement of the Terms of the Substance of the Proposed Rule Change

The Exchange proposes to amend its rules to adopt additional price protections for complex orders executed on the Exchange. The text of the proposed rule change is available on the Exchange's Web site *www.ise.com*, at the principal office of the Exchange, and at the Commission's Public Reference Room.

II. Self-Regulatory Organization's Statement of the Purpose of, and Statutory Basis for, the Proposed Rule Change

In its filing with the Commission, the Exchange included statements concerning the purpose of, and basis for, the proposed rule change and discussed any comments it received on the proposed rule change. The text of these statements may be examined at the places specified in Item IV below. The self-regulatory organization has prepared summaries, set forth in Sections A, B and C below, of the most significant aspects of such statements.

A. Self-Regulatory Organization's Statement of the Purpose of, and Statutory Basis for, the Proposed Rule Change

1. Purpose

The purpose of the proposal is to enhance the Exchange's complex order functionality by adopting additional price protections for complex orders executed on the Exchange. The Exchange provides in its rules several complex order protections that currently exist in the trading system.[3] Today, under Supplementary Material .07(b) to Rule 722, the trading system rejects any complex order strategy where all legs are to buy if it is entered at a price that is less than the minimum price, which is calculated as the sum of the ratio times $0.01 per leg.[4] Further, Supplementary Material .07(c) to Rule 722 provides price protection for

[1] 15 U.S.C. 78s(b)(1).

[2] 17 CFR 240.19b–4.

[3] *See* Rule 722, Supplementary Material .07.

[4] For example, an order to buy 2 calls and buy 1 put would have a minimum price of $0.03. If such an order were entered at a price of $0.02, it would not be executable, as a price of zero would have to be assigned to one of the legs of the order.

vertical spreads where the trading system today rejects a vertical spread order (*i.e.,* an order to buy a call (put) option and to sell another call (put) option in the same security with the same expiration but a higher (lower) strike price) when entered with a net price of less than zero, and prevents the execution of a vertical spread order at a price that is less than zero when entered as a market order to sell.[5]

The Exchange now proposes to enhance existing price protections for certain complex orders and quotes. The Exchange recognizes two complex order strategies that could cause undue risk to market participants. In order to address these strategies, the Exchange proposes to implement functionality that prevents these complex order strategies from trading at prices outside of pre-set limits. This proposal will apply only to vertical spread orders and quotes and to calendar spread orders and quotes. With this proposed rule change, the trading system will ensure that neither of these strategies trade outside of quantifiable values by more than a pre-set amount.

While the Exchange has developed functionality where the trading system rejects vertical spreads when entered with a net price of less than zero and prevents the execution of a vertical spread order at a price that is less than zero when entered as a market order to sell, the trading system does not currently reject orders and quotes that are priced above the maximum value of this strategy. These orders and quotes trade at prices that are more than the maximum value of the strategy. With this proposal, the Exchange will allow this price protection to be adjusted by a pre-set value. As a result, the trading system will reject vertical spread orders when entered with a net price of less than zero (minus a pre-set value) and will prevent the execution of a vertical spread order at a price that is less than zero (minus a pre-set value) when entered as a market order to sell. The Exchange will establish a common pre-set value as an amount not to exceed $1.00 which will apply across all options classes. For example, assume the market for a January 30 call is 1.00 × 1.20 and for a January 31 call it is 0.95 × 1.15. Suppose the pre-set value for a minimum price check for vertical spreads is established by the Exchange as $0.10. A vertical spread order consisting of a sale of one January 30 call and the purchase of one January 31 call priced at ($0.11) will be rejected by the trading system because the limit price of this order is below the pre-set value of ($0.10). A vertical spread market order to sell, i.e., sale of one January 30 call and the purchase of one January 31 call priced at the market, will be prevented from trading with individual bids and offers because the resulting trade, i.e., sale of January 30 call at $1.00 and purchase of January 31 call at $1.15, will result in a net price of ($0.15), which is below the pre-set value of ($0.10).

The Exchange also proposes to implement functionality where the trading system will reject a vertical spread order when entered with a net price greater than the value of the higher strike price minus the lower strike price (plus a pre-set value) and will prevent the execution of a vertical spread order at a price that is greater than the value of the higher strike price minus the lower strike price (plus a pre-set value) when entered as a market order to buy. The Exchange will establish a common pre-set value as the lesser of (i) an amount not to exceed $1.00, and (ii) a percentage of the difference between strike prices not to exceed 10%, which will apply across all options classes. For example, assume the market for a January 20 call is 10.55 × 10.70 and for a January 25 call it is 5.35 × 5.50. Suppose the pre-set value for a maximum price check of vertical spreads is established by the Exchange as the lesser of $0.10 and 5%. The maximum price for a vertical spread order consisting of the purchase of one January 20 call and the sale of one January 25 call is $5.10, which is calculated as the lesser of the difference between the strike prices plus the pre-set buffer, or $5.10, and the difference between the strike prices plus the pre-set buffer percentage of the strike prices difference, or $5.25. The trading system will therefore accept a vertical spread order consisting of a purchase of one January 20 call and the sale of one January 25 call priced at $5.00 but will reject a vertical spread order priced at $5.15. A vertical spread market order to buy, i.e., purchase of one January 20 call and sale of one January 25 call priced at the market, will be prevented from trading with individual bids and offers because the resulting trade, i.e., purchase of January 20 call at $10.70 and sale of January 25 call at $5.35, will result in a net price of $5.35, which is above the maximum price of $5.10.

A calendar spread is an order to buy a call (put) option with a longer expiration and to sell another call (put) options with a shorter expiration in the same security at the same strike price. A buyer of a calendar spread would buy a longer expiration and sell a shorter expiration in the same security at the same strike price while a seller of a calendar spread would sell a longer expiration and buy a shorter expiration in the same security at the same strike price. With this proposal, the Exchange proposes to implement functionality where the trading system will reject a calendar spread order when entered with a net price of less than zero (minus a pre-set value), and will prevent the execution of a calendar spread order at a price that is less than zero (minus a pre-set value) when entered as a market order to sell. The proposed price protection for calendar spreads will protect both buyers and sellers of calendar spreads. The Exchange will establish a common pre-set value as an amount not to exceed $1.00 which will apply across all options classes. For example, assume the market for a February 30 call is 1.00 × 1.20 and for a January 30 call it is 0.95 × 1.15. Suppose the pre-set value for a minimum price check of calendar spreads is established by the Exchange as $0.10. An order to sell a calendar spread consisting of a sale of one February 30 call and the purchase of one January 30 call priced at ($0.11) will be rejected by the trading system because the limit price of this order is below the pre-set value of ($0.10). A market order to sell a calendar spread consisting of a sale of one February 30 call and the purchase of one January 30 call priced at market, will be prevented from trading with individual bids and offers because the resulting trade, i.e., sale of February 30 call at $1.00 and purchase of January 30 call at $1.15 will result in a net price of ($0.15), which is below the pre-set value of ($0.10).

For purposes of the price protections set forth in Rule 722, Supplementary Material .07(c)(1) and in proposed Rule 722, Supplementary Material .07(c)(3), the Exchange will set a common pre-set value not to exceed $1.00 to be applied uniformly across all classes. For purposes of the price protections set forth in proposed Rule 722, Supplementary Material .07(c)(2), the Exchange will set a common pre-set value of (1) an amount not to exceed $1.00 and (2) a percentage of the difference between strike prices not to exceed 10% to be applied uniformly across all classes.

The Exchange notes, however, that there may be a need to adjust these values. For example, the Exchange may determine at some future point in time

[5] The vertical spread price check does not apply to complex orders executed in the Facilitation Mechanism, Solicited Order Mechanism and Price Improvement Mechanism. Complex orders executed in these mechanisms are two-sided orders where the contra-side order is willing to trade with the agency order at an agreed upon price thus removing the risk that the order was executed erroneously or at an erroneous price.

to adjust the established pre-set value for all options classes. Any change to the established pre-set value will be within the parameters prescribed in the rules and will be communicated to Exchange Members via circular.

The Exchange believes adopting a buffer is reasonable because while market participants may in certain situations be willing to trade a strategy beyond its minimum value, these trades could occur at erroneous prices without a cap. The Exchange's ability to adjust the pre-set value will provide market participants greater flexibility to execute their trading strategies as it will allow market participants to execute vertical and calendar spreads even if the strategy is priced outside its intrinsic value.

The proposed price checks will not apply to complex orders executed in the Facilitation Mechanism, Solicited Order Mechanism and Price Improvement Mechanism. Complex orders executed in these mechanisms are two-sided orders where the contra-side order is willing to trade with the agency order at an agreed upon price thus removing the risk that the order was executed erroneously or at an erroneous price.

2. Statutory Basis

The Exchange believes that its proposal is consistent with Section 6(b) of the Securities Exchange Act of 1934 (the ''Act'') [6] in general, and furthers the objectives of Section 6(b)(5) of the Act [7] in particular, in that it is designed to promote just and equitable principles of trade, to remove impediments to and perfect the mechanism for a free and open market and a national market system, and, in general, to protect investors and the public interest. The Exchange proposes to adopt the price protections described in the interest of protecting investors and to assure fair and orderly markets on the Exchange.

As discussed above, the Exchange believes that rejecting vertical spread orders that are entered at a price greater than their intrinsic value and preventing the execution of such orders at a price greater than their intrinsic value when they are entered as a buy market order protects investors from executing these orders at erroneous prices. The Exchange further believes that rejecting calendar spread orders that are entered at a negative price also protects investors from executing orders that were likely entered in error, and that preventing the execution of such orders at negative prices when they are entered as a sell market order, protects investors from paying to sell a strategy when they expected to receive payment for selling the strategy.

The Exchange notes, however, that in certain situations, market participants willingly want to execute certain trading strategies even if such trades occur outside their intrinsic value or at seemingly erroneous prices. The Exchange believes it is appropriate to provide market participants flexibility to allow them to execute these trading strategies and therefore to adopt a buffer to permit the execution of such trading strategies. The Exchange believes it is reasonable to adopt a buffer to give the Exchange the ability to adjust the pre-set value uniformly across all options classes in the event the Exchange believes a different pre-set value is more appropriate. Finally, the Exchange notes that it provides these protections for the benefit of, and in consultation with, its members. The Exchange believes the proposed rule change will help the Exchange to maintain a fair and orderly market, and provide a valuable service to investors.

B. Self-Regulatory Organization's Statement on Burden on Competition

The proposed rule change specifies circumstances in which the trading system does not provide an automatic execution in the interest of protecting investors against the execution of erroneous orders or the execution of orders at erroneous prices. As such, the proposal does not impose any burden on competition.

C. Self-Regulatory Organization's Statement on Comments on the Proposed Rule Change Received From Members, Participants, or Others

The Exchange has not solicited, and does not intend to solicit, comments on this proposed rule change. The Exchange has not received any unsolicited written comments from members or other interested parties.

III. Date of Effectiveness of the Proposed Rule Change and Timing for Commission Action

Because the foregoing proposed rule change does not significantly affect the protection of investors or the public interest, does not impose any significant burden on competition, and, by its terms, does not become operative for 30 days from the date on which it was filed, or such shorter time as the Commission may designate, it has become effective pursuant to Section 19(b)(3)(A) [8] of the Act and Rule 19b–4(f)(6) [9] thereunder. The Exchange provided the Commission with written notice of its intent to file the proposed rule change, along with a brief description and text of the proposed rule change, at least five business days prior to the date of filing the proposed rule change.

At any time within 60 days of the filing of the proposed rule change, the Commission summarily may temporarily suspend such rule change if it appears to the Commission that such action is necessary or appropriate in the public interest, for the protection of investors, or otherwise in furtherance of the purposes of the Act.

IV. Solicitation of Comments

Interested persons are invited to submit written data, views, and arguments concerning the foregoing, including whether the proposed rule change is consistent with the Act. Comments may be submitted by any of the following methods:

Electronic Comments

- Use the Commission's Internet comment form (*http://www.sec.gov/rules/sro.shtml*); or
- Send an email to *rule-comments@sec.gov*. Please include File Number SR–ISE–2014–26 on the subject line.

Paper Comments

- Send paper comments in triplicate to Secretary, Securities and Exchange Commission, 100 F Street NE., Washington, DC 20549–1090.

All submissions should refer to File Number SR–ISE–2014–26. This file number should be included on the subject line if email is used. To help the Commission process and review your comments more efficiently, please use only one method. The Commission will post all comments on the Commission's Internet Web site (*http://www.sec.gov/rules/sro.shtml*). Copies of the submission, all subsequent amendments, all written statements with respect to the proposed rule change that are filed with the Commission, and all written communications relating to the proposed rule change between the Commission and any person, other than those that may be withheld from the public in accordance with the provisions of 5 U.S.C. 552, will be available for Web site viewing and printing in the Commission's Public Reference Room, 100 F Street NE., Washington, DC 20549, on official business days between the hours of 10:00 a.m. and 3:00 p.m. Copies of such filing also will be available for inspection and copying at the principal offices of the Exchange. All comments

[6] 15 U.S.C. 78f(b).

[7] 15 U.S.C. 78f(b)(5).

[8] 15 U.S.C. 78s(b)(3)(A).

[9] 17 CFR 240.19b 4(f)(6).

received will be posted without change; the Commission does not edit personal identifying information from submissions. You should submit only information that you wish to make available publicly. All submissions should refer to File Number SR–ISE–2014–26, and should be submitted on or before June 23, 2014.

For the Commission, by the Division of Trading and Markets, pursuant to delegated authority.[10]

Kevin M. O'Neill,

Deputy Secretary.

[FR Doc. 2014–12646 Filed 5–30–14; 8:45 am]

BILLING CODE 8011–01–P

[10] 17 CFR 200.30–3(a)(12).

SMALL BUSINESS ADMINISTRATION

Reporting and Recordkeeping Requirements Under OMB Review

AGENCY: Small Business Administration.

ACTION: 30-Day notice.

SUMMARY: The Small Business Administration (SBA) is publishing this notice to comply with requirements of the Paperwork Reduction Act (PRA) (44 U.S.C. Chapter 35), which requires agencies to submit proposed reporting and recordkeeping requirements to OMB for review and approval, and to publish a notice in the **Federal Register** notifying the public that the agency has made such a submission. This notice also allows an additional 30 days for public comments.

DATES: Submit comments on or before July 2, 2014.

ADDRESSES: Comments should refer to the information collection by name and/or OMB Control Number and should be sent to: *Agency Clearance Officer,* Curtis Rich, Small Business Administration, 409 3rd Street SW., 5th Floor, Washington, DC 20416; and *SBA Desk Officer,* Office of Information and Regulatory Affairs, Office of Management and Budget, New Executive Office Building, Washington, DC 20503.

FOR FURTHER INFORMATION CONTACT: Curtis Rich, Agency Clearance Officer, (202) 205–7030, *curtis.rich@sba.gov.*

Copies: A copy of the Form OMB 83–1, supporting statement, and other documents submitted to OMB for review may be obtained from the Agency Clearance Officer.

SUPPLEMENTARY INFORMATION: Pursuant to 5(h)(i)(c) The Small Business Market Improvement Act the seller of a loan or pool certificate must disclose the information on this form to the purchaser, constant annual prepayment rate based upon the seller's analysis of the prepayment histories of SBA guaranteed loans with similar maturities and additional disclosure information on the terms, conditions and yield of the securities.

(1) *Title:* Form of Detached Assignment for U.S. Small Business Administration Loan Pool or Guaranteed Interest Certificate.

Description of Respondents: Collected information is used by investors and SBA.

Estimated Annual Responses: 856.

Estimated Annual Hour Burden: 733.

Curtis B. Rich,

Management Analyst.

[FR Doc. 2014–12610 Filed 5–30–14; 8:45 am]

BILLING CODE 8025–01–P

SOCIAL SECURITY ADMINISTRATION

[Docket No. SSA–2013–0047]

Social Security Ruling, SSR 14–2p; Titles II and XVI: Evaluating Diabetes Mellitus

AGENCY: Social Security Administration.

ACTION: Notice of Social Security Ruling (SSR).

SUMMARY: We are giving notice of SSR 14–2p. This SSR provides information about the types of impairments and limitations that result from diabetes mellitus (DM). It also provides guidance on how we evaluate DM in disability claims under titles II and XVI of the Social Security Act.

DATES: *Effective Date:* June 2, 2014.

FOR FURTHER INFORMATION CONTACT: Cheryl A. Williams, Office of Medical Policy, Social Security Administration, 6401 Security Boulevard, Baltimore, Maryland 21235–6401, (410) 965–1020.

SUPPLEMENTARY INFORMATION: Although 5 U.S.C. 552(a)(1) and (a)(2) do not require us to publish this SSR, we are doing so under 20 CFR 402.35(b)(1).

SSRs make available to the public precedential decisions relating to the Federal old-age, survivors, disability, supplemental security income, and special veterans benefits programs. We may base SSRs on determinations or decisions made at all levels of administrative adjudication, Federal court decisions, Commissioner's decisions, opinions of the Office of the General Counsel, or other interpretations of the law and regulations.

Although SSRs do not have the same force and effect as statutes or regulations, they are binding on all of our components. 20 CFR 402.35(b)(1).

This SSR will be in effect until we publish a notice in the **Federal Register** that rescinds it, or until we publish a new SSR that replaces or modifies it.

(Catalog of Federal Domestic Assistance, Program Nos. 96.001, Social Security—Disability Insurance; 96.002, Social Security—Retirement Insurance; 96.004—Social Security—Survivors Insurance; 96.006, Supplemental Security Income.)

Dated: May 22, 2014.

Carolyn W. Colvin,

Acting Commissioner of Social Security.

Policy Interpretation Ruling

Titles II and XVI: Evaluating Diabetes Mellitus

Purpose: This SSR provides information about the types of impairments and limitations that result from diabetes mellitus (DM). It also provides guidance on how we evaluate DM in disability claims under titles II and XVI of the Social Security Act (Act).[1] We provide information about endocrine disorders other than DM, explain the types of impairments and limitations that result from them, and provide guidance on how we evaluate endocrine disorders in disability claims under titles II and XVI of the Act in SSR 14–3p.

Citations (Authority): Sections 216(i), 223(d), 223(f), 1614(a)(3), and 1614(a)(4)of the Social Security Act, as amended; Regulations No. 4, subpart P, sections 404.1505, 404.1508, 404.1509, 404.1512–404.1513, 404.1520–404.1520a, 404.1521, 404.1522, 404.1523, 404.1525–404.1530, 404.1545, 404.1546, 404.1560–404.1569a, appendix 1, and appendix 2; and Regulations No. 16, subpart I, sections 416.905, 416.906, 416.908, 416.909, 416.912–416.913, 416.920, 416.920a, 416.921, 416.922, 416.923, 416.924, 416.924a, 416.924b, 416.925, 416.926, 416.926a, 416.927, 416.928, 416.930, 416.945, 416.946, 416.960–416.969a, 416.987, and 416.994–416.994a.

Introduction

On April 8, 2011, we published final rules in the **Federal Register** in which we removed the listings for evaluating DM in adults and in children from the Listing of Impairments (listings) because they no longer accurately identified

[1] For simplicity, we refer in this SSR only to initial claims for benefits. However, the policy interpretations in this SSR also apply to continuing disability reviews of adults and children under sections 223(f) and 1614(a)(4) of the Act, and to redeterminations of eligibility for benefits we make in accordance with section 1614(a)(3)(H) of the Act when a child who is receiving title XVI payments based on disability attains age 18.

people who are disabled.[2] [3] We added listing 109.08 for children from birth to the attainment of age 6 who have any type of DM and who require daily insulin. We removed the prior listings for DM and stated in the preamble to the final rules that we would continue to recognize DM as a potential cause of disability. We also stated that we would provide more detailed information about the types of impairments and limitations that result from DM, how we evaluate DM in disability claims, and how we would address the seriousness and difficulty of managing DM in children. We are publishing this SSR to provide the policy guidance we said we would provide in the preamble of the final rules.

Policy Interpretation

I. DM

A. General

DM is a chronic condition characterized by high blood glucose levels that result from the body's inability to produce or use insulin. Insulin is a hormone that regulates blood glucose. When the body cannot make enough insulin, a person takes it by injection or through the use of an insulin pump. Although DM usually requires lifelong treatment, medical advances in the diagnosis and treatment of DM have resulted in better management of DM in adults and children.

B. Two Major Types of DM and Their Treatments

1. *Type 1 DM.* In Type 1 DM, previously known as juvenile-onset DM or insulin-dependent DM, the pancreas does not produce insulin due to an autoimmune destruction of the insulin-producing cells. This results in increased blood glucose levels. The onset of Type 1 DM usually has the following symptoms: Polydipsia (increased thirst); polyphagia (increased appetite); polyuria (increased urination); unexplained weight loss; fatigue or drowsiness; and blurred vision.

Type 1 DM develops most often in children but can occur at any age. People with Type 1 DM must take daily insulin to live. They generally check their blood glucose levels prior to each meal and at bedtime; however, more frequent checking may be necessary as prescribed by a physician (for example, DM management of young school-aged children may require more frequent blood glucose level checks). Many children with Type 1 DM experience significant day-to-day variability in their DM, usually due to variations in activity. Depending on the child's age, this may necessitate daily, or even hourly, decision-making and intervention either by an adult or under the close supervision of an adult.

For each insulin dose, the decision regarding the amount and type of insulin the person needs is based on: Current blood glucose level (high, normal, or low); knowledge of the timing and type(s) of insulin the person had earlier in the day; the amount of food the person expects to consume; and the nature of activities the person planned for the next several hours. The total insulin administered each day may consist of various combinations of rapid-acting, short-acting, intermediate-acting, and long-acting insulin.

2. *Type 2 DM.* In Type 2 DM, previously known as adult-onset DM or non-insulin-dependent DM, the pancreas does not produce enough insulin, or there is failure in the transfer of insulin into the body cells (insulin resistance). People with Type 2 DM have symptoms similar to those of Type 1 DM, but the symptoms are usually not as obvious. Other symptoms include cuts or bruises that are slow to heal, numbness in the hands and feet, or recurrent infections of the skin, gums, or bladder.

Type 2 DM is more common in people with obesity and those who have a family history of DM. The first line of treatment is management of DM through diet and exercise. Oral medication or daily insulin is usually required when the weight loss and diet alone fail to manage blood glucose levels.

C. Hyperglycemia

Hyperglycemia (high blood glucose) means a person does not have enough insulin in his or her body. It can occur when a person does not take his or her insulin, eats too much, or does not exercise enough. It can also occur when a person is sick or is under stress. Symptoms of hyperglycemia include frequent urination, increased thirst, blurred vision, headaches, difficulty concentrating, abdominal pain or nausea, and ''fruity-smelling'' breath.

1. *Chronic hyperglycemia* leads to DM complications such as diabetic retinopathy, cardiovascular disease, diabetic nephropathy, and diabetic neuropathy. These complications occur more often in adults than in children because body system and organ changes due to DM develop over time.

2. *Diabetic ketoacidosis (DKA)* is an acute complication of hyperglycemia and is potentially life-threatening. It is not uncommon for people with Type 1 DM to initially present with DKA. DKA occurs when there is a shortage of insulin, resulting in toxicity in the blood. DKA may result in dehydration and an altered metabolic state with potential neurological, renal, respiratory, or cardiac dysfunction(s). When not appropriately treated, DKA may lead to chronic neurocognitive changes, coma, or even death.

D. Chronic DM Complications

1. *Diabetic retinopathy,* caused by damage to the small blood vessels in the retina, can result in leakage of blood into the eye and growth of abnormal new blood vessels, leading to vision loss over time. Symptoms may include pain or increased eye pressure. Nonproliferative retinopathy is an early stage of diabetic retinopathy. Although damage to the eyes from diabetic retinopathy may be permanent, some types of treatment, such as laser surgery, may alter the progression of the retinal changes. Diabetic retinopathy is a specific vascular complication of DM that may develop over time. Glaucoma, cataracts, and other disorders of the eye occur earlier and more frequently in people with DM. See 2.00 and 102.00 in the listings for guidance on evaluating vision loss.

2. *Cardiovascular disease (CVD)* affects the heart and blood vessels and is more common in people with DM than in people without DM. CVD is a major cause of morbidity and mortality for individuals with DM. People with DM, especially Type 2, have abnormal blood cholesterol and fat levels, which accelerates the development of CVD such as coronary artery disease or peripheral arterial disease (PAD). Amputation and foot ulceration are common consequences of PAD. See 4.00 and 104.00 in the listings for guidance on evaluating CVD.

3. *Diabetic nephropathy* is damage to the kidneys caused by chronic hyperglycemia. When the kidneys are damaged, protein leaks out of the kidneys into the urine. Damaged kidneys can no longer remove waste and extra fluids from the bloodstream. Diabetic nephropathy is a leading cause of end-stage renal disease. Careful management of blood glucose levels, together with the reduction of a co-morbid condition such as high blood pressure, may slow the damage. See 6.00 and 106.00 in the listings for guidance on evaluating genitourinary impairments.

4. *Diabetic neuropathy* is permanent nerve damage. The most common types of diabetic neuropathy are peripheral and autonomic. It can affect every organ

[2] 76 FR 19692 (2011). The final rules were effective on June 7, 2011.

[3] The listings are in 20 CFR Part 404, Subpart P, Appendix 1.

system in the body and produce abnormal function or a loss of sensation in the affected nerve area distribution. See 11.00 and 111.00 in the listings for guidance on evaluating neurological impairments.

a. *Peripheral neuropathy* (also known as sensorimotor neuropathy), nerve damage that affects the feet, legs, or hands, can cause pain, numbness, and tingling in toes, feet, legs, hands, and arms, which may subsequently cause difficulty walking and holding onto objects. A loss of sensation, combined with poor blood circulation, makes it common for a person with DM and neuropathy to be unaware of an injury to a lower extremity, where cuts or blisters can turn into ulcerations. The ulcerations may become infected and have difficulty healing. Complications of these ulcerations can include *cellulitis* (a painful inflammation of the skin and tissues, usually from an infection), *gangrene* (decomposing soft tissue that often results in amputation), and *sepsis* (an infection that spreads through the blood stream, potentially causing shock, widespread organ failure, or death).

b. *Autonomic neuropathy,* nerve damage that affects the heart and blood vessels, digestive system, and urinary tract, can cause dizziness, fainting, nausea, vomiting, and infrequent or frequent urination. It can also cause hypoglycemia unawareness due to nerve dysfunction that affects the body's ability to secrete epinephrine (the hormone adrenaline). Autonomic neuropathy is strongly associated with CVD in people with DM.

E. Hypoglycemia

Hypoglycemia (low blood glucose) means that a person has abnormally low levels of blood glucose (also known as ''insulin reaction''). It causes acute symptoms and signs, such as weakness, hunger, sweating, trembling, nervousness, palpitations, and difficulty with concentration. In young children, other symptoms may include inattention, fainting, falling asleep at inappropriate times, unexplained behavior, and temper tantrums. Hypoglycemia can occur when a person takes too much insulin (or a drug that increases insulin resistance), misses a meal, or exercises more than usual. It can also occur when a person takes medications for other health conditions. Episodes of hypoglycemia occur commonly in people with Type 1 DM and occur in some people with Type 2 DM. Episodes of hypoglycemia can occur during sleep or while a person is awake. During sleep, a person is unaware of hypoglycemia, but on awaking may be confused, disoriented, or may complain of a headache or extreme fatigue. Family members or observers may note that the person during sleep is restless, sweating, or even having seizure-like movements. The only sure way to assess for hypoglycemia is to check blood glucose levels while the person is sleeping. This checking does not prevent hypoglycemia; rather, it identifies the acute need to increase blood glucose levels by consuming something like orange juice.

If not treated promptly, hypoglycemia can become severe, causing an inadequate supply of glucose to brain cells, which can lead to complications including seizures or loss of consciousness, altered mental status, cognitive deficits, permanent brain damage, or death. Complications of hypoglycemia occur more frequently in young children because they are not able to recognize and respond to symptoms of hypoglycemia, and they depend on an adult to check their blood glucose levels. Because children's bodies are growing and developing, they are more sensitive to fluctuations in blood glucose levels brought on by eating, physical activity, and illness.

Daily insulin doses are based on a person's anticipated food intake and physical activity. Proper dosing of insulin requires complex decisionmaking 24 hours a day. For children, it may be difficult to predict daily insulin doses. If an adult administers insulin to a child based on the expectation that the child will consume a certain amount of food and engage in certain activities, but the child does not eat or exercise as expected, the amount of administered insulin may exceed the child's needs and lead to hypoglycemia. Additionally, during episodes of illness, a child's need for insulin will most likely change from his or her customary need.

Hypoglycemia unawareness means a person with DM either cannot recognize or does not experience the symptoms of hypoglycemia. It generally occurs in people who have had DM for a long time and experienced many episodes of hypoglycemia. Hypoglycemia unawareness interferes with a person's ability to control blood glucose levels and puts a person at risk for severe hypoglycemia-related complications. It can result in prolonged hypoglycemia if not treated immediately, resulting in seizure, loss of consciousness, or brain damage.

F. DM and Obesity

Obesity is a complex, chronic disease characterized by excessive accumulation of body fat. It may increase the severity of coexisting or related impairments to the extent that the combination of impairments meets or medically equals the criteria of a listing. Therefore, a person with DM and obesity may have more severe complications than the effects of each of the impairments considered separately.[4] For example, in adults, neurovascular complications of DM may result in an amputation of a lower extremity. The neurovascular impairment, along with obesity, may make successful rehabilitation with prosthesis more difficult. Although neurovascular complications are rare in children, obesity increases the likelihood of developing these complications.

II. The Sequential Evaluation Process for Adults

We follow a five-step sequential evaluation process when we make a determination or decision whether an adult is disabled due to DM.[5]

A. Work Activity

We determine at step 1 whether an adult with DM is working and, if so, whether the work activity is substantial gainful activity (SGA).[6] If an adult is engaging in SGA, we will find that he or she is not disabled. If an adult is not engaging in SGA, we go on to step 2 of the sequential evaluation process.

B. Severe Medically Determinable Impairment(s)

We determine at step 2 whether an adult has a medically determinable impairment (MDI) that is severe. An MDI must be established by medical evidence consisting of signs, symptoms, and laboratory findings, not only by a statement of symptoms.[7] When we evaluate the severity of DM, we consider any symptoms, such as fatigue or pain, that could limit functioning.[8] If the effects of DM, alone or in combination with another impairment(s), significantly limit an adult's physical or mental ability to do basic work activities, we find that the impairment(s) is severe. We find, however, that the impairment(s) is ''not severe'' if it has no more than a minimal effect on the adult's ability to do basic work activities. If an adult does not have

[4] See SSR 02–1p. For the complete titles of all SSRs cited in this footnote and those following, see the CROSS–REFERENCES section at the end of this SSR. SSRs are available at: *http://www.ssa.gov/OP_Home/rulings*.

[5] See 20 CFR 404.1520(a) and 416.920(a).

[6] See 20 CFR 404.1510 and 416.910.

[7] See 20 CFR 404.1508, 404.1520(c), 404.1521, 416.908, 416.920(c), and 416.921.

[8] See 20 CFR 404.1529 and 416.929; and SSR 96–3p.

an MDI that is severe, we find that he or she is not disabled. If an adult does have a severe impairment(s), we go on to step 3 of the sequential evaluation process.

C. Evaluating the Effects of DM Under Other Body Systems

We next determine at step 3 whether the impairment(s) meets or medically equals a listing, which also considers the medical severity of your impairment(s). DM is not a listed impairment for adults. However, the effects of DM, either alone or in combination with another impairment(s), may meet or medically equal the criteria of a listing in an affected body system(s).[9] Below are some examples of the effects of DM and the body systems under which we evaluate them:

- Amputation of an extremity, under the musculoskeletal system listings (1.00).
- Diabetic retinopathy, under the special senses and speech listings (2.00).
- Hypertension, cardiac arrhythmias, and heart failure, under the cardiovascular system listings (4.00).
- Gastroparesis and ischemic bowel disease (intestinal necrosis), under the digestive system listings (5.00).
- Diabetic nephropathy, under the genitourinary impairments listings (6.00).
- Slow-healing bacterial and fungal infections, under the skin disorders listings (8.00).
- Diabetic neuropathy, under the neurological listings (11.00).
- Cognitive impairments, depression, anxiety, and eating disorders, under the mental disorders listings (12.00).

D. Assessing Residual Functional Capacity

1. When the effects of DM, alone or in combination with another impairment(s), are severe but do not meet or medically equal the criteria of a listing, we assess an adult's residual functional capacity (RFC).[10] RFC is the most an adult can do despite his or her limitation(s).

2. The combined effects of DM and another impairment(s) can be greater than the effects of each of the impairments considered separately. We consider all work-related physical and mental limitations, whether due to an adult's DM, other impairment(s), or combination of impairments. For example, adults with peripheral sensory neuropathy may have difficulty walking, operating foot controls, or manipulating objects because they have lost the ability to sense objects with their hands or feet. Adults with chronic hyperglycemia may experience fatigue or difficulty with concentration that interferes with their ability to perform work activity on a sustained basis.

3. We then proceed to step 4 and, if necessary, step 5 of the sequential evaluation process. We use the RFC assessment at step 4 to evaluate whether an adult is capable of performing any past relevant work (PRW) as he or she actually performed it or as the job is generally performed in the national economy. If an adult's RFC precludes the performance of PRW (or if there was no PRW), we use the RFC assessment to make a finding at step 5 about his or her ability to perform other work that exists in significant numbers in the national economy. The usual vocational considerations apply.[11]

III. The Sequential Evaluation Process for Children

We follow a three-step sequential evaluation process when we make a determination or decision whether a child is disabled due to DM.[12] [13]

A. Work Activity

We determine at step 1 whether a child is working and, if so, whether the work activity is SGA.[14] If a child is engaging in SGA, we find that he or she is not disabled. If a child is not engaging in SGA, we go on to step 2 of the sequential evaluation process.

B. Severe Medically Determinable Impairment(s)

We determine at step 2 whether a child has an MDI that is severe. An MDI must be established by medical evidence consisting of signs, symptoms, and laboratory findings, not only by a statement of symptoms.[15] When we evaluate severity, we consider the effects of DM on the child's functioning, including: Limitations as a result of treatment (for example, insulin); and the kinds and extent of help, support, and supervision the child needs compared to that of children the same age who do not have impairments.[16] If the child's DM, alone or in combination with another impairment(s), causes more than minimal functional limitations, we find that the impairment(s) is severe.[17] We find that the impairment(s) is ''not severe'' if it causes no more than minimal functional limitations. If a child does not have an MDI that is severe, we find that he or she is not disabled. If a child does have a severe impairment(s), we go on to step 3 of the sequential evaluation process.

C. Meets or Medically Equals a Listing, or Functionally Equals the Listings

1. *Evaluating DM under the endocrine disorders body system.* We have one childhood listing for DM, listing 109.08. We find children with any type of DM who require daily insulin and have not attained age 6 disabled under this listing. We presume such children have not developed adequate cognitive capacity for recognizing and responding to their hypoglycemia symptoms; that is, they have *hypoglycemia unawareness.* This means they are unable to participate in their own care at the most basic level because they are unable to alert adults to their symptoms of hypoglycemia. Parents and other caregivers must have near-constant visual contact with these young children to watch for fainting or other signs of impending hypoglycemia so that they may intervene to prevent their children from having a hypoglycemic seizure or becoming comatose or dying. This level of help satisfies an example of functional equivalence in our functional equivalence regulation: The requirement for 24-hour-a-day supervision of a child for medical reasons.[18] Listing 109.08 presumes this level of help is satisfied.

2. *Evaluating the effects of DM under other body systems.* DM is not a listed impairment for children who are age 6 or older and require daily insulin or for children of any age with DM who do not require daily insulin. However, DM may be of listing-level severity in these children. We determine whether the effects of DM, alone or in combination with another impairment(s), meet or

[9] See 20 CFR 404.1509, 404.1525, 404.1526, 416.909, 416.925, and 416.926.

[10] See 20 CFR 404.1545 and 416.945; and SSR 96–8p and SSR 96–9p.

[11] See 20 CFR 404.1560–404.1569a and 416.960–416.969a.

[12] The process described in this section applies to determinations and decisions made for children under title XVI. See 20 CFR 416.924.

[13] Under title II, we use the adult definition of disability to make disability determinations or decisions for people under age 18.

[14] See 20 CFR 416.910.

[15] See 20 CFR 416.908 and 416.924(c).

[16] In 20 CFR 416.924a(b), we provide guidance on factors that are relevant whenever we evaluate a child's functioning.

[17] We presume that all children with any type of DM who require daily insulin and have not attained age 6 have more than minimal functional limitations because they are unable to alert adults to their symptoms of hypoglycemia. Some children age 6 and older with DM who require daily insulin, and who have not developed the cognitive ability for recognizing and responding to hypoglycemia symptoms, also have more than minimal functional limitations.

[18] See 20 CFR 416.926a(m).

medically equal the criteria of a listing in an affected body system(s).[19] Complications of DM that are linked to chronic *hyperglycemia* (for example, diabetic retinopathy or nephropathy) develop gradually, making them rare in children. However, some adolescents may start to develop or have early-onset eye or kidney complications or have impaired growth. Below are some examples of the effects of DM and the body systems under which we evaluate them:

- Growth impairments, under the growth impairment listings (100.00).
- Diabetic retinopathy, under the special senses and speech listings (102.00).
- Cardiac arrhythmias, under the cardiovascular system listings (104.00).
- Gastroparesis and ischemic bowel disease (intestinal necrosis), under the digestive system listings (105.00).
- Cognitive impairments, depression, anxiety, and permanent brain damage, under the mental disorders listings (112.00).

3. *Evaluating the effects of DM under functional equivalence*. When the effects of a child's DM, alone or in combination with another impairment(s), are severe but do not meet or medically equal the criteria of a listing in any affected body system(s), we determine whether they result in limitations that functionally equal the listings.[20] By ''functionally equal the listings,'' we mean that the child's impairment(s) must be of listing-level severity. In evaluating the effects of a child's DM, alone or in combination with another impairment(s), on his or her functioning, we consider what the child cannot do, has difficulty doing, needs help doing, or is restricted from doing because of his or her impairment(s). We must explain any limitation in a child's ability to function age-appropriately on the basis of an MDI(s).[21]

a. *Determining the medical need for 24-hour-a-day adult supervision for children age 6 and older*. Children of any age need some level of adult supervision or support in managing their DM that requires daily insulin. However, the mere need for adult supervision does not establish disability.

We presume children with DM who require daily insulin and are under age 6 have not developed the cognitive ability for recognizing and responding to hypoglycemia symptoms and, therefore, have impairments that meet listing 109.08. Generally, children develop the cognitive ability for recognizing and responding to their hypoglycemia symptoms by age 6. However, developmental abilities of children vary greatly. Some children age 6 and older may have the same medical need for adult help and continuous supervision as younger children. We evaluate on an individual case basis whether children age 6 and older have developed cognitive awareness of their hypoglycemia symptoms. Without this awareness, children who require daily insulin are unable to alert adults to their symptoms, and require 24-hour-a-day adult supervision for medical reasons.

When we find that a child with DM has hypoglycemia unawareness, we consider how long the child has had or will have the medical need for 24-hour-a-day adult supervision. For example, a child in elementary school who has only recently been diagnosed with Type 1 DM may require more time to develop awareness of his or her symptoms of hypoglycemia than an adolescent who has been newly diagnosed.

Some children may have a mental impairment(s) or another physical impairment(s) in addition to DM that also may require 24-hour-a-day adult supervision for medical reasons. We find any child who requires 24-hour-a-day adult supervision for medical reasons disabled under our functional equivalence rules.

b. *Determining functional equivalence for all other children with any type of DM*. Children with DM that does not meet or medically equal a listing or children who do not have a medical need for 24-hour-a-day adult supervision may nevertheless have impairments that functionally equal the listings under our rules for evaluating disability in children.

To functionally equal the listings, an impairment(s) must be of listing-level severity; that is, it must result in ''marked'' limitations in two domains of functioning or an ''extreme'' limitation in one domain of functioning. Domains are broad areas of functioning intended to capture all of what a child can or cannot do.

When we determine whether a child's impairment(s) functionally equals the listings, we use the following six domains:

- Acquiring and using information;
- Attending and completing tasks;
- Interacting and relating with others;
- Moving about and manipulating objects;
- Caring for yourself; and
- Health and physical well-being.

When we evaluate a child's functioning in these six domains, we consider how the child functions compared to children the same age who do not have impairments. The first five domains describe the abilities a child uses to develop the skills that he or she uses to function in day-to-day activities. In domain six, we consider the cumulative physical effects of physical and mental impairments and their associated treatments on a child's health and functioning. This domain does not address typical development and functioning. Rather, it addresses how such things as recurrent illness, the side effects of medication, and the need for ongoing treatment affect a child's body; that is, the child's health and physical well-being.

DM, alone or in combination with another impairment(s), may affect a child's functioning in any domain. We evaluate each child's limitations by considering all relevant information from acceptable medical sources (for example, a pediatrician or psychologist), other medical sources (for example, a physical or an occupational therapist), and non-medical sources such as parents, teachers, and other people who know the child.[22] [23] We also consider factors such as the:

- Kinds and extent of help, support, and supervision a child with DM needs that exceed what a child the same age would typically need; and
- Effects of DM medications and other treatments, including adverse and beneficial effects.

Some children with DM may have limitations in the domain of *Acquiring and using information* due to fluctuating blood glucose levels. They may find it difficult to concentrate on and participate in classroom work while at school when they experience low or elevated blood glucose levels. They may miss enough classroom time to affect their learning if they frequently seek help outside of the classroom from a school nurse or other adult for treating hypoglycemia or hyperglycemia. Children with DM may also miss school due to frequent doctor visits, emergency room care, or hospitalizations.

Frequent episodes of hypoglycemia or hyperglycemia may also result in a child having limitations in the domain of *Attending and completing tasks* at school, at home, or in the community. If a child often does not feel well due to low or elevated blood glucose levels, it may be difficult for him or her to stay focused on activities long enough to complete them in an age-appropriate

[19] See 20 CFR 416.909, 416.924(a), 416.925, and 416.926.

[20] See 20 CFR 416.926a; SSRs 09–1p and 09–2p.

[21] See 20 CFR 416.924a(b) and 416.926a.

[22] See 20 CFR 416.913(a).

[23] See 20 CFR 416.924a(a).

manner. For example, a child with DM who requires insulin may have difficulty maintaining attention to details and may make mistakes in his or her schoolwork due to an inability to concentrate.

Children with DM may have limitations in the domain of *Interacting and relating with others* because they are self-conscious about checking their blood glucose levels throughout the day, administering insulin, and following a special diet in the presence of their peers. They may find it difficult to maintain social contacts or participate in sport activities because they believe their peers may not understand their DM care requirements and will bully or tease them because of their requirements.

If DM or its treatment causes fatigue or weakness that limits a child's fine or gross motor functioning, we evaluate those effects in the domain of *Moving about and manipulating objects*. For example, a young child who experiences weakness and trembling as a consequence of hypoglycemia, or nausea due to hyperglycemia, may have difficulty with coordination, climbing up and down stairs, and running.

Other children who have DM may have difficulty meeting their emotional and physical wants and needs in ways that are age-appropriate and in comparison to other same-age children who do not have impairments. For example, a child who refuses to use insulin as needed because of embarrassment about injecting it in the presence of peers may have limitations in the domain of *Caring for yourself* because this action would endanger his or her health.

The ongoing effects of DM and its treatment may affect a child's health and physical well-being. For example, we evaluate the effects of hypoglycemia or DKA in the domain of *Health and physical well-being*. Managing DM in young children, particularly, requires intensive care from an adult to maintain the child's health and physical well-being. We evaluate such medical fragility in this domain. It is important to remember that the cumulative physical effects of DM and its treatment can vary in kind and intensity, affecting each child differently.

The effects of DM may differ from child to child. We evaluate the effects of a child's DM, alone or in combination with another impairment(s), including the effects of medication or other treatment, in all relevant domains. When considering the functioning of a child with DM, we use the ''whole child'' approach to evaluate the particular effects of DM on a child's activities in any and all of the domains that the child uses to do those activities, based on the evidence in the case record.

We find a child disabled if the effects of his or her DM, alone or in combination with another impairment(s), result in ''marked'' limitations in two domains of functioning or an ''extreme'' limitation in one domain of functioning.

Effective Date: This SSR is effective on June 2, 2014.

Cross-References: SSR 96–3p: Titles II and XVI: Considering Allegations of Pain and Other Symptoms in Determining Whether a Medically Determinable Impairment is Severe; SSR 96–8p: Titles II and XVI: Assessing Residual Functional Capacity in Initial Claims; SSR 96–9p: Titles II and XVI: Determining Capability to do Other Work—Implications of a Residual Functional Capacity for Less Than a Full Range of Sedentary Work; SSR 02–1p: Titles II and XVI: Evaluation of Obesity; SSR 09–1p: Title XVI: Determining Childhood Disability Under the Functional Equivalence Rule—The ''Whole Child'' Approach; SSR 09–2p: Title XVI: Determining Childhood Disability—Documenting a Child's Impairment-Related Limitations; SSR 09–3p: Title XVI: Determining Childhood Disability—The Functional Equivalence Domain of ''Acquiring and Using Information''; SSR 09–4p: Title XVI: Determining Childhood Disability—The Functional Equivalence Domain of ''Attending and Completing Tasks''; SSR 09–5p: Title XVI: Determining Childhood Disability—The Functional Equivalence Domain of ''Interacting and Relating with Others''; SSR 09–6p: Title XVI: Determining Childhood Disability—The Functional Equivalence Domain of ''Moving About and Manipulating Objects''; SSR 09–7p: Title XVI: Determining Childhood Disability—The Functional Equivalence Domain of ''Caring for Yourself''; SSR 09–8p: Title XVI: Determining Childhood Disability—The Functional Equivalence Domain of ''Health and Physical Well-Being''; and Program Operations Manual System (POMS) DI 22001.001–DI 22001.035, DI 22505.001, DI 22505.003, DI 24510.005, DI 24510.006, DI 24515.061–DI 24515.063, DI 24570.001, DI 25005.001, DI 25010.001, DI 25015.001, DI 25025.001, DI 25201.005, DI 25220.010, DI 25225.001–DI 25225.065, DI 25505.025, and DI 25505.030.[24]

[FR Doc. 2014–12601 Filed 5–30–14; 8:45 am]

BILLING CODE 4191–02–P

SOCIAL SECURITY ADMINISTRATION

[Docket No. SSA–2013–0048]

Social Security Ruling, SSR 14–3p; Titles II and XVI: Evaluating Endocrine Disorders Other Than Diabetes Mellitus

AGENCY: Social Security Administration.

ACTION: Notice of Social Security Ruling (SSR).

SUMMARY: We are giving notice of SSR 14–3p. This SSR provides information about specific endocrine disorders other than diabetes mellitus (DM), and explains the types of impairments and limitations that result from those disorders. It also provides guidance on how we evaluate endocrine disorders in disability claims under titles II and XVI of the Social Security Act.

DATES: *Effective Date:* June 2, 2014.

FOR FURTHER INFORMATION CONTACT: Cheryl A. Williams, Office of Medical Policy, Social Security Administration, 6401 Security Boulevard, Baltimore, Maryland 21235–6401, (410) 965–1020.

SUPPLEMENTARY INFORMATION: Although 5 U.S.C. 552(a)(1) and (a)(2) do not require us to publish this SSR, we are doing so under 20 CFR 402.35(b)(1).

SSRs make available to the public precedential decisions relating to the Federal old-age, survivors, disability, supplemental security income, and special veterans benefits programs. We may base SSRs on determinations or decisions made at all levels of administrative adjudication, Federal court decisions, Commissioner's decisions, opinions of the Office of the General Counsel, or other interpretations of the law and regulations.

Although SSRs do not have the same force and effect as statutes or regulations, they are binding on all of our components. 20 CFR 402.35(b)(1).

This SSR will be in effect until we publish a notice in the **Federal Register** that rescinds it, or until we publish a new SSR that replaces or modifies it.

(Catalog of Federal Domestic Assistance, Program Nos. 96.001, Social Security—Disability Insurance; 96.002, Social Security—Retirement Insurance; 96.004—Social Security—Survivors Insurance; 96.006, Supplemental Security Income.)

[24] SSRs are available at: *http://www.ssa.gov/OP_Home/rulings*. POMS are available at: *https://secure.ssa.gov/apps10/poms.nsf/partlist*.

Dated: May 22, 2014.

Carolyn W. Colvin,

Acting Commissioner of Social Security.

Policy Interpretation Ruling

Titles II and XVI: Evaluating Endocrine Disorders Other Than Diabetes Mellitus

Purpose: This SSR provides information about endocrine disorders other than diabetes mellitus (DM), and explains the types of impairments and limitations that result from those disorders. It also provides guidance on how we evaluate endocrine disorders in disability claims under titles II and XVI of the Social Security Act (Act).[1] We provide information about the types of impairments and limitations that result from DM, and provide guidance on how we evaluate DM in disability claims under titles II and XVI of the Act in SSR 14–2p.

Citations (Authority): Sections 216(i), 223(d), 223(f), 1614(a)(3), and 1614(a)(4) of the Social Security Act, as amended; Regulations No. 4, subpart P, sections 404.1505, 404.1508, 404.1509, 404.1512–404.1513, 404.1520–404.1520a, 404.1521, 404.1522, 404.1523, 404.1525–404.1530, 404.1545, 404.1546, 404.1560–404.1569a, appendix 1, and appendix 2; and Regulations No. 16, subpart I, sections 416.905, 416.906, 416.908, 416.909, 416.912–416.913, 416.920, 416.920a, 416.921, 416.922, 416.923, 416.924, 416.924a, 416.924b, 416.925, 416.926, 416.926a, 416.927, 416.928, 416.930, 416.945, 416.946, 416.960–416.969a, 416.987, and 416.994–416.994a.

Introduction

On April 8, 2011, we published final rules in the **Federal Register** in which we removed the listings for evaluating endocrine disorders in adults and in children from the Listing of Impairments (listings) because they no longer accurately identified people who are disabled.[2] [3] When we published the final rules, we stated in the preamble that we would provide more detailed information about specific endocrine disorders, the types of impairments and limitations that result from these disorders, and how we evaluate endocrine disorders in disability claims. We are publishing this SSR to provide the policy guidance we said we would provide in the preamble of the final rules.

Policy Interpretation

I. Endocrine Disorders Other Than DM

A. General

Endocrine glands produce hormones responsible for controlling various physiological functions such as metabolism, blood glucose levels, digestion, electrolyte balance, water balance, and sexual function. The major glands in the endocrine system are pituitary, thyroid, parathyroid, adrenal, pancreas, and gonads (testes and ovaries). The glands release hormones into the bloodstream where they travel to targeted organs. When an endocrine gland produces either too much of a hormone (hyperfunction) or too little of a hormone (hypofunction), the hormonal imbalance can cause an endocrine disorder, resulting in complications affecting various parts of the body. Although many endocrine disorders usually require lifelong treatment, medical advances in the diagnosis and treatment of endocrine disorders have resulted in better management of these disorders in adults and children.

B. Types of Endocrine Disorders Other Than DM and Their Treatments

1. *Pituitary gland disorders.* The pituitary gland, sometimes called the ''master gland'' of the endocrine system, controls the functions of all other endocrine glands (except for the pancreas).

a. *Hyperpituitarism* primarily refers to excess production of growth hormone (GH). Excess GH, which is less common in children, causes an overgrowth of the tissues in the body that are still capable of growing. During childhood, increased production of GH can result in skeletal gigantism. Symptoms and signs of gigantism include bones of excessive length, abnormal bone and body proportions, and delayed epiphyseal fusion. Adults may develop acromegaly, due to increased production of GH. Symptoms and signs of acromegaly include: Enlarged bones of the face, jaw, hands and feet; joint pain or swelling; and vision abnormalities. Treatment includes medications that suppress GH production, radiation therapy, and surgery.

b. *Hypopituitarism.* Decreased blood levels of GH cause delays in bone and physical growth in children. However, low GH levels are not clinically significant in adults. Deficient production of antidiuretic hormone (ADH) may result in diabetes insipidus with excessive urination producing dehydration and electrolyte imbalance. Generally, GH deficiency is treated with growth hormone replacement (hGH) in children and adolescents. Treatment with ADH replacement medications and hydration generally will successfully control the symptoms and signs of diabetes insipidus within 12 months.

2. *Thyroid gland disorders.* The thyroid gland regulates growth and development, body temperature, metabolic processes, heart rate, blood pressure, and mental function.

a. *Hyperthyroidism.* Excess production of thyroid hormone may abnormally increase the body's metabolic rate. Symptoms and signs of hyperthyroidism include altered mood, tremors, heart palpitations, hypertension, weight loss, exophthalmos (bulging of the eyes), and goiter (abnormal enlargement of thyroid gland). The most common type of hyperthyroidism is Graves disease, which involves increased secretion of thyroid hormone. Treatment includes lifelong thyroid-suppression medication, radioactive iodine therapy, or surgical removal of the thyroid. Generally, treatment controls the symptoms and signs of hyperthyroidism within 12 months.

b. *Hypothyroidism.* Low production of thyroid hormone may result in an abnormally slow metabolic rate. Some symptoms and signs of hypothyroidism include weakness or fatigue, dry or coarse skin, slow or depressed speech, and adverse mental changes. Adequate amounts of thyroid hormone are critical for the developing brain and nervous system in newborns and infants. The most common cause of hypothyroidism is Hashimoto thyroiditis, in which the body's immune system mistakenly attacks the thyroid gland. Treatment with thyroid replacement therapy will generally control the symptoms and signs of hypothyroidism within a few months.

3. *Parathyroid gland disorders.* The four parathyroid glands produce parathyroid hormone or parathormone (PTH), which regulates calcium and phosphorus levels in bone, blood, nerves, muscle, and other body tissues.

a. *Hyperparathyroidism.* Excess PTH production may cause mildly elevated blood calcium levels (hypercalcemia), which do not always require treatment. Symptoms and signs of hyperparathyroidism include constipation, nausea, vomiting, fatigue, and kidney stones. Hyperparathyroidism may also cause significant depletion of bone calcium, resulting in osteoporosis. Treatment

[1] For simplicity, we refer in this SSR only to initial claims for benefits. However, the policy interpretations in this SSR also apply to continuing disability reviews of adults and children under sections 223(f) and 1614(a)(4) of the Act, and to redeterminations of eligibility for benefits we make in accordance with section 1614(a)(3)(H) of the Act when a child who is receiving title XVI childhood disability benefits attains age 18.

[2] 76 FR 19692 (2011). The final rules were effective on June 7, 2011.

[3] The listings are in 20 CFR Part 404, Subpart P, Appendix 1.

includes surgical removal of the gland(s), which usually resolves the problem.

b. *Hypoparathyroidism.* Low production of PTH may cause abnormally low levels of blood calcium and increased levels of blood phosphorus. Symptoms and signs include muscle cramps, tetany (muscle spasms), excessive nervousness, and headaches. Treatment includes lifelong calcium, vitamin D oral supplements, and a diet high in calcium and low in phosphorus. Treatment generally controls this condition.

4. *Adrenal gland disorders.* The adrenal glands produce several types of hormones that regulate carbohydrate, protein, and fat metabolism; proper functioning of the immune system; and the body's ability to respond to stress.

a. *Hyperadrenalism.* Excess cortisol (for example, Cushing syndrome) or other adrenal hormone adversely affects metabolism and cellular functions, together with cardiovascular and musculoskeletal functions. Excess cortisol is characterized by dysmorphic body changes (for example, centripetal obesity), increased facial and body hair in women, and the reduced ability to fight infections. Treatment of adrenal hormone overproduction may include oral medication, surgery, radiation, or a combination of treatments. Treatment generally controls this condition.

b. *Hypoadrenalism* (Addison disease or adrenal insufficiency) is characterized by generalized weakness and fatigue, darkening of skin (hyperpigmentation), muscle wasting, loss of appetite, low blood pressure, electrolyte imbalance, and depression. Treatment requires lifelong supplementation of cortisol and other replacement hormones and medications. Treatment generally controls this condition within 12 months.

5. *Pancreatic disorders.* The pancreas produces digestive enzymes and insulin. Digestive enzymes help break down food for the absorption of nutrients by the body.[4] Insulin is essential to the absorption of glucose from the bloodstream into body cells for conversion into cellular energy. Diabetes mellitus (DM) results from the metabolic changes that occur when blood glucose cannot be transferred into the cells. We describe DM and explain how we evaluate it in SSR 14–2p.

6. *Gonadal disorders.* The term ''gonads'' refers to the testes in males and the ovaries in females. Congenital gonadal dysfunction (also referred to as primary hypogonadism) is frequently associated with chromosomal disorders or other genetic syndromes. Treatment involves lifelong hormone replacement therapy, which usually controls this condition.

II. The Sequential Evaluation Process for Adults

We follow a five-step sequential evaluation process when we make a determination or decision whether an adult is disabled due to an endocrine disorder.[5]

A. Work Activity

We determine at step 1 whether an adult with an endocrine disorder is working and, if so, whether the work activity is substantial gainful activity (SGA).[6] If an adult is engaging in SGA, we will find that he or she is not disabled. If an adult is not engaging in SGA, we go on to step 2 of the sequential evaluation process.

B. Severe Medically Determinable Impairment(s)

We determine at step 2 whether an adult has a medically determinable impairment (MDI) that is severe. An MDI must be established by medical evidence consisting of signs, symptoms, and laboratory findings, not only by a statement of symptoms. When we evaluate the severity of an endocrine disorder, we consider any symptoms, such as fatigue or pain, that could limit functioning.[7] If the effects of an endocrine disorder, alone or in combination with another impairment(s), significantly limit an adult's physical or mental ability to do basic work activities, we find that the impairment(s) is severe. We find, however, that the impairment(s) is ''not severe'' if it has no more than a minimal effect on the adult's ability to do basic work activities. If an adult does not have an MDI that is severe, we will find that he or she is not disabled. If an adult does have a severe impairment(s), we go on to step 3 of the sequential evaluation process.

C. Evaluating the Effects of Endocrine Disorders under Other Body Systems

We next determine at step 3 whether the impairment(s) meets or medically equals a listing, which also considers the medical severity of your impairment(s). Endocrine disorders are not listed impairments for adults. However, the effects of an endocrine disorder, either alone or in combination with another impairment(s), may meet or medically equal the criteria of a listing in an affected body system(s).[8] [9] Below are some examples of the effects of specific endocrine disorders and the body systems under which we evaluate them:

- *Effects of hyperpituitarism:* Compromised use of the upper or lower extremities due to complications of boney structures, under the musculoskeletal system listings (1.00).
- *Effects of hypopituitarism:* ADH deficiency that is untreated or unresponsive to treatment resulting in heart failure or arrhythmia, under the cardiovascular system listings (4.00).
- *Effects of hyperthyroidism:* Irregular heartbeat (arrhythmia) or other cardiac dysfunction, under the cardiovascular system listings (4.00); weight loss, under the digestive system listings (5.00); strokes, under the neurological listings (11.00); and mood or anxiety disorders, under the mental disorders listings (12.00).
- *Effects of hyperparathyroidism:* Fractures related to osteoporosis, under the musculoskeletal system listings (1.00); PTH-induced hypercalcemia that leads to cataracts, under the special senses and speech listings (2.00); kidney stones, kidney dysfunction, and bone demineralization (osteodystrophy), under the genitourinary impairments listings (6.00); and mood disorders (such as depression) and anxiety disorders, under the mental disorders listings (12.00).
- *Effects of hypoparathyroidism:* Cardiac anomalies associated with congenital absence of the parathyroid glands, under the cardiovascular system listings (4.00); muscle spasms (tetany) or convulsions, under the neurological listings (11.00); immune deficiency disorders associated with congenital absence of the parathyroid glands, under the immune system disorders listings (14.00).
- *Effects of hyperadrenalism:* Fractures, under the musculoskeletal system listings (1.00); and elevated blood pressure and cardiovascular disease, under the cardiovascular system listings (4.00).
- *Effects of hypoadrenalism:* Compromised use of the upper or lower extremities, due to generalized muscle weakness and joint pain, under the musculoskeletal system listings (1.00); weight loss, under the digestive system listings (5.00); and mood disorders

[4] When the pancreas fails to produce enough digestive enzymes (exocrine function), we evaluate any resulting malabsorption of nutrients under the digestive system listings (5.00 and 105.00).

[5] See 20 CFR 404.1520(a) and 416.920(a).

[6] See 20 CFR 404.1510 and 416.910.

[7] See 20 CFR 404.1529 and 416.929; and SSR 96–3p.

[8] See 20 CFR 404.1509, 404.1525, 404.1526, 416.909, 416.925, and 416.926.

[9] We evaluate endocrine cancers under the malignant neoplastic diseases listings (13.00).

including depression, under the mental disorders listings (12.00).

• *Effects of gonadal disorders:* Congenital heart disease associated with female hypogonadism, under the cardiovascular system listings (4.00); and learning problems and emotional changes associated with male hypogonadism (for example, Klinefelter syndrome) and female hypogonadism (for example, Turner syndrome), under the mental disorders listings (12.00).

D. Assessing Residual Functional Capacity

1. When the effects of an endocrine disorder(s), alone or in combination with another impairment(s), are severe but do not meet or medically equal the criteria of a listing, we assess an adult's residual functional capacity (RFC).[10] RFC is the most an adult can do despite his or her limitation(s).

2. The combined effects of an endocrine disorder and another impairment(s) can be greater than the effects of each of the impairments considered separately. We consider all work-related physical and mental limitations, whether due to an adult's endocrine disorder, other impairment(s), or combination of impairments. For example, some endocrine disorders, such as skeletal gigantism, may cause pain and difficulty walking effectively, due to complications with bone growth. Other endocrine disorders, such as hypothyroidism, may cause severe fatigue because of a hormonal imbalance, limiting an adult's ability to perform work activities on a sustained basis. Limitations in an adult's functioning associated with an endocrine disorder or a combination of impairments may also result from the effects of treatment, such as hormone replacement medications, or complications that persist despite treatment.

3. We then proceed to step 4 and, if necessary, step 5 of the sequential evaluation process. We use the RFC assessment at step 4 to evaluate whether an adult is capable of performing any past relevant work (PRW) as he or she actually performed it or as the job is generally performed in the national economy. If an adult's RFC precludes the performance of PRW (or if there was no PRW), we use the RFC assessment to make a finding at step 5 about his or her ability to perform other work that exists in significant numbers in the national economy. The usual vocational considerations apply.[11]

III. The Sequential Evaluation Process for Children

We follow a three-step sequential evaluation process when we make a determination or decision whether a child is disabled due to an endocrine disorder.[12] [13]

A. Work Activity

We determine at step 1 whether a child is working and, if so, whether the work activity is SGA.[14] If a child is engaging in SGA, we find that he or she is not disabled. If a child is not engaging in SGA, we go on to step 2 of the sequential evaluation process.

B. Severe Medically Determinable Impairment(s)

We determine at step 2 whether a child has an MDI that is severe. An MDI must be established by medical evidence consisting of signs, symptoms, and laboratory findings, not only by a statement of symptoms.[15] When we evaluate severity, we consider the effects of the endocrine disorder on the child's functioning, including: Limitations as a result of treatment; and the kinds and extent of help, support, and supervision the child needs compared to that of children the same age who do not have impairments.[16] If the child's endocrine disorder, alone or in combination with another impairment(s), causes more than minimal functional limitations, we find that the impairment(s) is severe. We find that the impairment(s) is ''not severe'' if it causes no more than minimal functional limitations. If a child does not have an MDI that is severe, we find that he or she is not disabled. If a child does have a severe impairment(s), we go on to step 3 of the sequential evaluation process.

C. Meets or Medically Equals a Listing, or Functionally Equals the Listings

1. *Evaluating the effects of endocrine disorders under other body systems.* Endocrine disorders (except DM for children who have not attained age 6 and who require daily insulin) are not listed impairments for children of any age. However, endocrine disorders may be of listing-level severity because of their effects in other body systems. We determine whether the effects of an endocrine disorder, alone or in combination with another impairment(s), meet or medically equal the criteria of a listing in an affected body system(s).[17] [18] Below are some examples of the effects of specific endocrine disorders and the body systems under which we evaluate them:

• *Effects of hyperpituitarism:* Compromised use of the upper or lower extremities due to complications of boney structures, under the musculoskeletal system listings (101.00); and mental status changes due to a child's physical appearance, under the mental disorders listings (112.00).

• *Effects of hypopituitarism:* Delayed long bone growth that does not respond to GH replacement treatment, under the musculoskeletal system listings (101.00); and ADH deficiency that is untreated or unresponsive to treatment resulting in heart failure or arrhythmia, under the cardiovascular system listings (104.00).

• *Effects of hyperthyroidism:* Irregular heartbeat (arrhythmia) or other cardiac dysfunction, under the cardiovascular system listings (104.00); weight loss, under the digestive system listings (105.00); strokes, under the neurological listings (111.00); and mood or anxiety disorders, under the mental disorders listings (112.00).

• *Effects of hypothyroidism:* Growth failure with delayed physical development (children may gain weight yet still have a slowed growth rate) resulting from undiagnosed or inadequately treated hypothyroidism, under the growth impairment listings (100.00); and intellectual disability or other cognitive disorders resulting from inadequately treated hypothyroidism, under the mental disorders listings (112.00).

• *Effects of hyperparathyroidism:* Fractures related to osteoporosis, under the musculoskeletal system listings (101.00); PTH-induced hypercalcemia that leads to cataracts, under the special senses and speech listings (102.00); kidney stones, kidney dysfunction, and bone demineralization (osteodystrophy), under the genitourinary impairments listings (106.00); and mood disorders, such as depression and anxiety disorders, under the mental disorders listings (112.00).

[10] See 20 CFR 404.1545 and 416.945; and SSR 96–8p and SSR 96–9p.

[11] See 20 CFR 404.1560–404.1569a and 416.960–416.969a.

[12] The process described in this section applies to determinations and decisions made for children under title XVI. See 20 CFR 416.924.

[13] Under title II, we use the adult definition of disability to make disability determinations or decisions for people under age 18.

[14] See 20 CFR 416.910.

[15] See 20 CFR 416.908 and 416.924(c).

[16] In 20 CFR 416.924a(b), we provide guidance on factors that are relevant whenever we evaluate a child's functioning.

[17] See 20 CFR 416.909, 416.924(a), 416.925, and 416.926.

[18] We evaluate endocrine cancers under the malignant neoplastic diseases listings (113.00).

• *Effects of hypoparathyroidism:* Cardiac anomalies associated with congenital absence of the parathyroid glands, under the cardiovascular system listings (104.00); muscle spasms (tetany) or convulsions, under the neurological listings (111.00); and immune deficiency disorders associated with congenital absence of the parathyroid glands, under the immune system disorders listings (114.00).

• *Effects of hyperadrenalism:* Fractures, under the musculoskeletal system listings (101.00); and elevated blood pressure and cardiovascular disease, under the cardiovascular system listings (104.00).

• *Effects of hypoadrenalism:* Compromised use of the upper or lower extremities, due to generalized muscle weakness and joint pain, under the musculoskeletal system listings (101.00); weight loss, under the digestive system listings (105.00); and mood disorders including depression, under the mental disorders listings (112.00).

• *Effects of gonadal disorders:* Congenital heart disease associated with female hypogonadism, under the cardiovascular system listings (104.00); and learning problems and emotional changes associated with male hypogonadism (for example, Klinefelter syndrome) and female hypogonadism (for example, Turner syndrome), under the mental disorders listings (112.00).

2. *Evaluating the effects of endocrine disorders under functional equivalence.* When the effects of a child's endocrine disorder, alone or in combination with another impairment(s), are severe but do not meet or medically equal a listing in any affected body system, we determine whether they result in limitations that functionally equal the listings.[19] By ''functionally equal the listings,'' we mean that the child's impairment(s) must be of listing-level severity. In evaluating the effects of a child's endocrine disorder, alone or in combination with another impairment(s), on his or her functioning, we consider what the child cannot do, has difficulty doing, needs help doing, or is restricted from doing because of his or her impairment(s). We must explain any limitation in a child's ability to function age-appropriately on the basis of an MDI(s).[20]

To functionally equal the listings, an impairment(s) must be of listing-level severity; that is, it must result in ''marked'' limitations in two domains of functioning or an ''extreme'' limitation in one domain of functioning. Domains are broad areas of functioning intended to capture all of what a child can or cannot do.

When we determine whether a child's impairment(s) functionally equals the listings, we use the following six domains:

• Acquiring and using information;
• Attending and completing tasks;
• Interacting and relating with others;
• Moving about and manipulating objects;
• Caring for yourself; and
• Health and physical well-being.

When we evaluate a child's functioning in these six domains, we consider how the child functions compared to children the same age who do not have impairments. The first five domains describe the abilities a child uses to develop the skills that he or she uses to function in day-to-day activities. In domain six, we consider the cumulative physical effects of physical and mental impairments and their associated treatments on a child's health and functioning. This domain does not address typical development and functioning. Rather, it addresses how such things as recurrent illness, the side effects of medication, and the need for ongoing treatment affect a child's body; that is, the child's health and physical well-being.

An endocrine disorder, alone or in combination with another impairment(s), may affect a child's functioning in any domain. We evaluate each child's limitations by considering all relevant information from acceptable medical sources (for example, a pediatrician or psychologist), other medical sources (for example, a physical or occupational therapist), and non-medical sources such as parents, teachers, and other people who know the child.[21] [22] We also consider factors such as the:

• Kinds and extent of help, support, and supervision a child with an endocrine disorder needs that exceed what a child the same age would typically need; and
• Effects of medications and other treatments, including adverse and beneficial effects.

Some children with inadequately treated hypothyroidism (or hyperthyroidism), for example, may have limitations in *Attending and completing tasks* due to their difficulty listening to the teacher, maintaining focus, staying on task in the classroom, or excessive fatigue. Other children with panhypopituitarism after surgery for craniopharyngioma (a benign tumor that develops near the pituitary gland), for example, may experience partial loss of visual fields in both eyes (hemianopsia) and, therefore, have difficulty *Moving about and manipulating objects.*

Some adolescents with inadequately treated growth hormone deficiency may appear many years younger than their chronological age. These children may have difficulty *Interacting and relating with others* due to their physical appearance, or may experience difficulty shopping or getting an afterschool job because of being mistakenly perceived as a much younger child.

The effects of an endocrine disorder may differ from child to child. We evaluate the effects of a child's endocrine disorder, alone or in combination with another impairment(s), including the effects of medication or other treatment, in all relevant domains. When considering the functioning of a child with an endocrine disorder, we use the ''whole child'' approach to evaluate the particular effects of the endocrine disorder on a child's activities in any and all of the domains that the child uses to do those activities, based on the evidence in the case record.

We find a child disabled if the effects of his or her endocrine disorder, alone or in combination with another impairment(s), result in ''marked'' limitations in two domains of functioning or an ''extreme'' limitation in one domain of functioning.

Effective Date: This SSR is effective on June 2, 2014.

Cross-References: SSR 96–3p: Titles II and XVI: Considering Allegations of Pain and Other Symptoms in Determining Whether a Medically Determinable Impairment is Severe; SSR 96–8p: Titles II and XVI: Assessing Residual Functional Capacity in Initial Claims; SSR 96–9p: Titles II and XVI: Determining Capability to do Other Work—Implications of a Residual Functional Capacity for Less Than a Full Range of Sedentary Work; SSR 02–1p: Titles II and XVI: Evaluation of Obesity; SSR 09–1p: Title XVI: Determining Childhood Disability Under the Functional Equivalence Rule—The ''Whole Child'' Approach; SSR 09–2p: Title XVI: Determining Childhood Disability—Documenting a Child's Impairment-Related Limitations; SSR 09–3p: Title XVI: Determining Childhood Disability—The Functional Equivalence Domain of ''Acquiring and Using Information''; SSR 09–4p: Title XVI: Determining Childhood Disability—The Functional Equivalence Domain of ''Attending and Completing Tasks''; SSR 09–5p: Title XVI:

[19] See 20 CFR 416.926a; SSRs 09–1p and 09–2p.

[20] See 20 CFR 416.924a(b) and 416.926a.

[21] See 20 CFR 416.913(a).

[22] See 20 CFR 416.924a(a).

Determining Childhood Disability—The Functional Equivalence Domain of ''Interacting and Relating With Others''; SSR 09–6p: Title XVI: Determining Childhood Disability—The Functional Equivalence Domain of ''Moving About and Manipulating Objects''; SSR 09–7p: Title XVI: Determining Childhood Disability—The Functional Equivalence Domain of ''Caring for Yourself''; SSR 09–8p: Title XVI: Determining Childhood Disability—The Functional Equivalence Domain of ''Health and Physical Well-Being''; and Program Operations Manual System (POMS) DI 22001.001–DI 22001.035, DI 22505.001, DI 22505.003, DI 24510.005, DI 24510.006, DI 24515.061–DI 24515.063, DI 24570.001, DI 25005.001, DI 25010.001, DI 25015.001, DI 25025.001, DI 25201.005, DI 25220.010, DI 25225.001–DI 25225.065, DI 25505.025, and DI 25505.030.[23]

[FR Doc. 2014–12612 Filed 5–30–14; 8:45 am]

BILLING CODE 4191–02–P

[23] SSRs are available at: *http://www.ssa.gov/OP_Home/rulings.* POMS are available at: *https://secure.ssa.gov/apps10/poms.nsf/partlist.*

DEPARTMENT OF STATE

[Public Notice 8750]

30-Day Notice of Proposed Information Collection: Nonimmigrant Visa Application

ACTION: Notice of request for public comment and submission to OMB of proposed collection of information.

SUMMARY: The Department of State has submitted the information collection described below to the Office of Management and Budget (OMB) for approval. In accordance with the Paperwork Reduction Act of 1995 we are requesting comments on this collection from all interested individuals and organizations. The purpose of this Notice is to allow 30 days for public comment.

DATES: Submit comments directly to the Office of Management and Budget (OMB) up to July 2, 2014.

ADDRESSES: Direct comments to the Department of State Desk Officer in the Office of Information and Regulatory Affairs at the Office of Management and Budget (OMB). You may submit comments by the following methods:

- *Email: oira_submission@omb.eop.gov.* You must include the DS form number, information collection title, and the OMB control number in the subject line of your message.
- *Fax:* 202–395–5806. Attention: Desk Officer for Department of State.

FOR FURTHER INFORMATION CONTACT: Direct requests for additional information regarding the collection listed in this notice, including requests for copies of the proposed collection instrument and supporting documents, to Sydney Taylor, who may be reached at *PRA_BurdenComments@state.gov.*

SUPPLEMENTARY INFORMATION:

- *Title of Information Collection:* Nonimmigrant Visa Application.
- *OMB Control Number:* 1405–0018.
- *Type of Request:* Revision of Currently Approved Collection.
- *Originating Office:* CA/VO/L/R.
- *Form Number:* DS–156.
- *Respondents:* All Nonimmigrant Visa Applicants.
- *Estimated Number of Respondents:* 1,000.
- *Estimated Number of Responses:* 1,000.
- *Average Time per Response:* 75. minutes
- *Total Estimated Burden Time:* 1,250 hours.
- *Frequency:* Once per respondent.
- *Obligation to Respond:* Required to Obtain or Retain a Benefit.

We are soliciting public comments to permit the Department to:

- Evaluate whether the proposed information collection is necessary for the proper functions of the Department.
- Evaluate the accuracy of our estimate of the time and cost burden for this proposed collection, including the validity of the methodology and assumptions used.
- Enhance the quality, utility, and clarity of the information to be collected.
- Minimize the reporting burden on those who are to respond, including the use of automated collection techniques or other forms of information technology.

Please note that comments submitted in response to this Notice are public record. Before including any detailed personal information, you should be aware that your comments as submitted, including your personal information, will be available for public review.

Abstract of proposed collection: Form DS–156 is required by regulation of all nonimmigrant visa applicants who do not use the Online Application for Nonimmigrant Visa (Form DS–160). Posts will use the DS–156 to elicit information necessary to determine an applicant's visa eligibility.

Methodology: The DS–156, Nonimmigrant Visa Application is available online at *https://evisaforms.state.gov/ds156.asp.* The applicant must fill out the form online and print out the 2–D Barcode. This form will only be used if applicants cannot access the DS–160, Electronic Application for Nonimmigrant Visa.

Dated: May 21, 2014.

Don Heflin,

Acting Deputy Assistant Secretary, Bureau of Consular Affairs, Department of State.

[FR Doc. 2014–12699 Filed 5–30–14; 8:45 am]

BILLING CODE 4710–06–P

DEPARTMENT OF TRANSPORTATION

Federal Aviation Administration

Notice of Passenger Facility Charge (PFC) Approvals and Disapprovals

AGENCY: Federal Aviation Administration (FAA), DOT.

ACTION: Monthly Notice of PFC Approvals and Disapprovals. In March 2014, there were five applications approved. This notice also includes information on two applications, one approved in December 2012 and the other approved in August 2013, inadvertently left off the December 2012 and August 2013 notices, respectively. Additionally, 10 approved amendments to previously approved applications are listed.

SUMMARY: The FAA publishes a monthly notice, as appropriate, of PFC approvals and disapprovals under the provisions of the Aviation Safety and Capacity Expansion Act of 1990 (Title IX of the Omnibus Budget Reconciliation Act of 1990) (Pub. L. 101–508) and Part 158 of the Federal Aviation Regulations (14 CFR Part 158). This notice is published pursuant to paragraph d of § 158.29.

PFC Applications Approved

Public Agency: City of Rochester, Minnesota.

Kevin Application Number: 13–06–C–00–RST.

Application Type: Impose and use a PFC.

PFC Level: $4.50.

Total PFC Revenue Approved In This Decision: $1,698,590.

Earliest Charge Effective Date: October 1, 2014.

Estimated Charge Expiration Date: January 1, 2017.

Classes of Air Carriers Not Required To Collect PFC's: (1) Nonscheduled/on demand air carriers filing FAA Form 1800–31; (2) commuter/small certificated air carriers filing DOT Form T–100; and (3) foreign air carriers filing DOT Form T–100 that do not meet the threshold requirements for passenger boardings.

Determination: Disapproved. The FAA found that the public agency did not provide the information required by regulation to the air carriers during the air carrier consultation process.

Brief Description of Projects Approved for Collection and Use: Equipment—vacuum truck upgrades.

Terminal apron rehabilitation.

Taxiway rehabilitation.

Runway intersection rehabilitation.

Equipment—loader.

Equipment—plow.

Taxiway lighting—construction.

Taxiway lighting—engineering.

Terminal roof rehabilitation 2010.

Terminal roof rehabilitation 2008.

Equipment—vehicle with on-board friction meter.

Pavement construction—entrance road 2008.

Equipment—blower.

Equipment—plow.

Terminal loading bridge construction.

Airport geographic information system/FAA survey.

Master plan phase II.

Precision approach path indicator lights—construction.

PFC consultation.

Decision Date: December 20, 2012.

FOR FURTHER INFORMATION CONTACT: Sandy Depottey, Minneapolis Airports District Office, (612) 253–4642.

Public Agency: County of Kenton and Kenton County Airport Board, Cincinnati, Ohio.

Application Number: 13–14–C–00–CVG.

Application Type: Impose and use a PFC.

PFC Level: $4.50.

Total PFC Revenue Approved In This Decision: $64,465,657.

Earliest Charge Effective Date: October 1, 2014.

Estimated Charge Expiration Date: March 1, 2020.

Classes of Air Carriers Not Required To Collect PFC'S: (1) Part 121 supplemental operators (commuters or small certificated air carriers) filing DOT Form T–100 that enplane less than 1,500 passengers per year at Cincinnati/Northern Kentucky International Airport (CVG); and (2) Part 135 air taxi commercial operators filing FAA Form 1800–31 and operating at CVG.

Determination: Approved. Based on information contained in the public agency's application, the FAA has determined that each approved class accounts for less than 1 percent of the total annual enplanements at CVG.

Brief Description of Projects Approved for Collection and Use At A $4.50 PFC Level: Taxiway M reconstruction/rehabilitation (taxiway D to taxiway M2).

Taxiways T and S rehabilitation.

Brief Description of Projects Approved for Collection and Use At A $3.00 PFC Level: East service road rehabilitation.

Equipment purchases—snow removal trucks.

Equipment purchase—crash truck.

PFC program administration costs—preparation of PFC application.

PFC program administrative costs 2013–2017.

Brief Description of Project Partially Approved for Collection and Use At A $4.50 PFC Level: Runway 18L/36R rehabilitation.

Determination: The approved amount is less than was requested due to lower bid costs and additional funding from other sources.

Brief Description of Project Partially Approved for Collection and Use At A $4.00 PFC Level: Terminal 3 consolidation/reactivation of concourse A.

Determination: The FAA determination that portions of the proposed project were not eligible for PFC funding.

Brief Description of Projects Partially Approved for Collection and Use At A $3.00 PFC Level: Roof replacement—field maintenance (snow and ice control equipment) building.

Determination: The FAA determined that only a portion of the building was needed to store eligible equipment and thus limited the PFC approval to only that portion of the building.

Decision Date: August 16, 2013.

FOR FURTHER INFORMATION CONTACT: Cynthia Wills, Memphis Airports District Office, (901) 322–8190.

Public Agency: City of Midland, Texas.

Application Number: 14–07–C–00–MAF.

Application Type: Impose and use a PFC.

PFC Level: $4.50.

Total PFC Revenue Approved In This Decision: $2,434,939.

Earliest Charge Effective Date: April 1, 2017.

Estimated Charge Expiration Date: May 1, 2018.

Class of Air Carriers Not Required to Collect PFC'S: Part 135 air taxi/commercial operators nonscheduled/on demand carriers filing FAA Form 1800–31.

Determination: Approved. Based on information contained in the public agency's application, the FAA has determined that the approved class accounts for less than 1 percent of the total annual enplanements at Midland International Airport.

Brief Description of Projects Approved for Collection An Use: Airfield security access control software and cable upgrade.

Aircraft ramp lighting system improvements.

Construct runway 16R run-up apron.

Northwest taxilane extension phase II.

Decision Date: March 11, 2014.

FOR FURTHER INFORMATION CONTACT: Marcelino Sanchez, Texas Airports Development Office, (817) 222–5652.

Public Agency: International Falls/Koochiching County Airport Commission, International Falls, Minnesota.

Application Number: 14–05–C–00–INL.

Application Type: Impose and use a PFC.

PFC Level: $4.50.

Total PFC Revenue Approved In This Decision: $835,639.

Earliest Charge Effective Date: June 1, 2015.

Estimated Charge Expiration Date: March 1, 2033.

Class of Air Carriers Not Required to Collect PFC'S: None.

Brief Description of Projects Approved for Collection And Use: PFC administration.

Terminal design, construction, and administration.

Terminal baggage claim area and equipment.

Decision Date: March 13, 2014.

FOR FURTHER INFORMATION CONTACT: Nancy Nistler, Minneapolis Airports District Office, (612) 253–4638.

Public Agency: Louisville Regional Airport Authority, Louisville, Kentucky.

Application Number: 14–08–C–00–SDF.

Application Type: Impose and use a PFC.

PFC Level: $4.50.

Total PFC Revenue Approved In This Decision: $5,203,144.

Earliest Charge Effective Date: April 1, 2015.

Estimated Charge Expiration Date: January 1, 2016.

Class Of Air Carriers Not Required to Collect PFC'S: Air taxi/commercial operators filing FAA Form 180–31 with operate at Louisville International Airport (SDF).

Determination: Approved. Based on information contained in the public agency's application, the FAA has determined that the approved class accounts for less than 1 percent of the total annual enplanements at SDF.

Brief Description of Projects Approved for Collection and Use At A $4.50 PFC Level: Sound insulation program—phase 3B through phase 7.

Jet bridge acquisition, rehabilitation and installation of pre-conditioned air units.

Brief Description of Project Approved for Collection and Use At A $3.00 PFC Level: PFC implementation and administration costs.

Brief Description of Withdrawn Project: Runway safety area 11–29.

Date of Withdrawal: December 11, 2013.

Decision Date: March 14, 2014.

FOR FURTHER INFORMATION CONTACT: Cynthia Wills, Memphis Airports District Office, (901) 322–8190.

Public Agency: County of Emmet, Pellston, Michigan.

Application Number: 14–13–C–00–PLN.

Application Type: Impose and use a PFC.

PFC Level: $4.50.

Total PFC Revenue Approved In This Decision: $563,363.

Earliest Charge Effective Date: May 1, 2018.

Estimated Charge Expiration Date: July 1, 2024.

Class of Air Carriers Not Required To Collect PFC'S: Air taxi commercial operators filing FAA Form 1800–31 that are operating at Pellston Regional Airport of Emmet County (PLN).

Determination: Approved. Based on information contained in the public agency's application, the FAA has determined that the approved class accounts for less than 1 percent of the total annual enplanements at PLN.

Brief Description of Projects Approved For Collection An Use: Construction of parking lot access road.

Design of new boarding bridges.

Installation of new boarding bridges.

Runway pavement markings and crack sealing.

Taxiway pavement markings and crack sealing.

Apron pavement markings and crack sealing.

PFC administration expenses.

Construction of hangar access road.

Replacement of airfield guidance signage.

Replacement of runway end identifier lights on runway 5/23.

Decision Date: March 17, 2014.

FOR FURTHER INFORMATION CONTACT: Irene Porter, Detroit Airports District Office, (734) 229–2915.

Public Agency: City of Manhattan, Kansas.

Application Number: 14–04–C–00–MHK.

Application Type: Impose and use a PFC.

PFC Level: $4.50.

Total PFC Revenue Approved In This Decision: $2,972,696.

Earliest Charge Effective Date: May 1, 2014.

Estimated Charge Expiration Date: May 1, 2025.

Class of Air Carriers Not Required to Collect PFC's: Non-scheduled/on-demand air taxi operators filing FAA Form 1800–31.

Determination: Approved. Based on information contained in the public agency's application, the FAA has determined that the approved class accounts for less than 1 percent of the total annual enplanements at Manhattan Regional Airport.

Brief Description of Projects Approved for Collection An Use: Terminal expansion (design).

Terminal expansion (phase 1—construction).

Install wildlife fence.

Decision Date: March 25, 2014.

FOR FURTHER INFORMATION CONTACT: Sheila Bridges, Central Region Airports Division, (816) 329–2638.

AMENDMENTS TO PFC APPROVALS

Amendment No. city, state	Amendment approved date	Original approved net PFC revenue	Amended approved net PFC revenue	Original estimated charge exp. date	Amended estimated charge exp. date
07–06–C–02–LIT Little Rock, AR	02/25/14	$34,723,804	$38,428,622	11/01/11	11/01/11
04–01–C–02–HNL Honolulu, HI	02/25/14	34,802,226	37,307,986	02/01/07	02/01/07
04–01–C–02–OGG Kahului, HI	02/25/14	6,629,349	7,143,275	02/01/07	02/01/07
04–01–C–02–KOA Kailua/Kona, HI	02/25/14	2,216,888	2,388,749	02/01/07	02/01/07
04–01–C–02–LIH Lihue, HI	02/25/14	1,489,763	1,603,219	02/01/07	02/01/07
11–04–C–01–PGV Greenville, NC	03/11/14	9,589,497	8,731,247	10/01/38	01/01/37
09–05–C–02–HPN White Plains, NY	03/12/14	10,000,000	1,600,000	10/01/11	06/01/11
11–06–C–01–HPN White Plains, NY	03/12/14	8,000,000	5,200,000	04/01/13	04/01/13
11–07–C–01–TXK Texarkana, AR	03/25/14	850,066	18,671	09/01/18	05/01/14
*04–02–C–01–PAH Paducah, KY	03/28/14	875,189	875,189	01/01/17	02/01/16

Notes: The amendment denoted by an asterisk (*) includes a change to the PFC level charged from $3.00 per enplaned passenger to $4.50 per enplaned passenger. For Paducah, KY, this change is effective on May 1, 2014.

Issued in Washington, DC, on May 23, 2014.

Joe Hebert,

Manager, Financial Analysis and Passenger Facility Charge Branch.

[FR Doc. 2014–12679 Filed 5–30–14; 8:45 am]

BILLING CODE 4910–13–P

DEPARTMENT OF TRANSPORTATION

Federal Aviation Administration

Notice of Passenger Facility Charge (PFC) Approvals and Disapprovals

AGENCY: Federal Aviation Administration (FAA), DOT.

ACTION: Monthly Notice of PFC Approvals and Disapprovals. In April 2014, there were seven applications approved. This notice also includes information on two applications, one approved in March 2012 and the other approved in January 2014, inadvertently left off the March 2012 and January 2014 notices, respectively. Additionally, five approved amendments to previously approved applications are listed.

SUMMARY: The FAA publishes a monthly notice, as appropriate, of PFC approvals and disapprovals under the provisions of the Aviation Safety and Capacity Expansion Act of 1990 (Title IX of the Omnibus Budget Reconciliation Act of 1990) (Public Law 101–508) and Part 158 of the Federal Aviation Regulations (14 CFR Part 158). This notice is published pursuant to paragraph d of § 158.29.

PFC Applications Approved

Public Agency: Peninsula Airport Commission, Newport News, Virginia.

Application Number: 12–03–C–00–PHF.

Application Type: Impose and use a PFC.

PFC Level: $4.50.

Total PFC Revenue Approved In This Decision: $12,090,644.

Earliest Charge Effective Date: March 1, 2017.

Estimated Charge Expiration Date: March 1, 2022.

Class of Air Carriers Not Required to Collect PFC'S: Air carriers operating under Part 135 or Part 298 on an on-demand, non-scheduled whole plane charter basis and filing FAA Form 1800–31.

Determination: Approved. Based on information submitted in the public agency's application, the FAA has determined that the proposed class accounts for less than 1 percent of the total annual enplanements at Newport News/Williamsburg International Airport.

Brief Description of Projects Approved for Collection at And Use: Taxiway A lighting (design).

Wetlands mitigation.

Taxiway A design.

Outbound baggage handling system replacement.

Snow removal equipment.

Baggage claim expansion (design).

Security checkpoint (planning and design).

PFC application development.

PFC application administration.

Runway 17/35 lighting (design).

Brief Description of Projects Approved for Collection: Taxiway A reconstruction—construction.

Baggage claim expansion (construction).

Security checkpoint (construction).

Taxiways A and F (design).

Taxiways A and F (construction).

Decision Date: March 21, 2012.

FOR FURTHER INFORMATION CONTACT: Jeffrey Breeden, Washington Airports District Office, (703) 661–1363.

Public Agency: Barkley Regional Airport Authority, Paducah, Kentucky.

Application Number: 14–03–C–00–PAH.

Application Type: Impose and use a PFC.

PFC Level: $4.50.

Total PFC Revenue Approved In This Decision: $532,931.

Earliest Charge Effective Date: January 1, 2017.

Estimated Charge Expiration Date: October 1, 2025.

Classes of Air Carriers Not Required to Collect PFC'S: (1) Air taxi/commercial operators enplaning less than 200 annual passengers at Barkley Regional Airport (PAH); and (2) large certificated air carriers filing DOT Form T–100, conducting only nonscheduled operations at (PAH), and enplaning less than 200 annual passengers at PAH.

Determination: Approved. Based on information submitted in the public agency's application, the FAA has determined that each proposed class accounts for less than 1 percent of the total annual enplanements at PAH.

Brief Description of Project Approved for Collection At And Use: Perimeter road construction.

Aircraft board stairs.

Pave access road.

Rehabilitate 6,300-square-yard apron.

Construct supplemental lighted wind cones.

Construct taxilanes site grade and drain.

Construct terminal building pipe bollards.

Construct commute-a-walk concrete pads.

Repave aircraft rescue and firefighting station turn-around.

New terminal location study.

Refurbish 1980 snow plow.

Purchase five 800 MHz security radios.

Design and construct runway safety area 22 improvement.

Design and construct apron overlay phase 1.

Design and construct Watergate east of runway 4.

Design and construct drive and security fence.

Design and construct waterline extension and fire hydrant.

Design and construct apron overlay phase 2.

Replace security patrol vehicle.

Rebuild waste water lift/grinder station.

Purchase end loader/snow blower.

Renovate 1990 snow plow.

Tree trimming for runway 32 approach.

Glycol recapture system design.

Expand/update airfield equipment building.

Replace old power vault medium intensity taxiway lighting regulator.

Re-grade between taxiway A south and runway 4.

Terminal footprint study.

Replace failed rotating beacon.

Construct Circle Drive.

Replace three existing security gates.

New air compressor at fire station.

Wildlife assessment study.

Surface painted holding position signs.

Clean/reseal joints, terminal apron.

Breathing packs for aircraft rescue and firefighting.

Survey electrical load and provide vault generator.

Phase A tiedown apron and taxilane.

Slope protection of runway 4 runway safety area, phase 1.

Seal coat runways and taxiways, phase 1.

Aircraft wheelchair lift.

Satellite radio mobile communication system.

Slope protection of runway 4 runway safety area, phase 2.

Seal coat runways and taxiways, phase 2.

Phase B tiedown apron and taxilane.

Slope protection for runway safety area, runway 4.

Storm drainage research and design.

Airport layout plan update.

Design for terminal re-roof.

Friction measuring equipment.

Construct restroom in secured gate area.

Renovation of existing storm sewer, phase A.

Design and phase A construction of concrete apron.

Identification badge card printer.

Aircraft rescue and firefighting vehicle.

Perimeter fence security upgrade design.

Renovate terminal for efficient movement.

Security enhancements (gate controllers).

Concrete apron phase B.

New terminal environmental assessment.

Rehabilitate terminal roof.

Rehabilitate terminal building re-roof, phase B.

Perimeter/security fence upgrade.

Remark runway 14/32 to Global Positioning System Area Navigation standards.

Update 800 MHz radio system.

Replace storm sewer system under apron.

Replace taxiways A, B, C west, and F north edge lights.

Replace security inspection vehicle.

Corrective marking, runway 4/22 to runway 5/23.

Brief Description of Withdrawn Projects: Fuel truck spill containment pad.

Fuel truck water supply hose.

Fire station repair to National Institute for Occupational Safety and Health standards.

Date of Withdrawal: January 15, 2014.

Decision Date: January 21, 2014.

FOR FURTHER INFORMATION CONTACT: Cynthia Wills, Memphis Airports District Office, (901) 322–8190.

Public Agency: Niagara Frontier Transportation Authority, Buffalo, New York.

Application Number: 13–10–C–00–BUF.

Application Type: Impose and use a PFC.

PFC Level: $4.50.

Total PFC Revenue Approved In This Decision: $478,540.

Earliest Charge Effective Date: August 1, 2014.

Estimated Charge Expiration Date: September 1, 2014.

Class of Air Carriers Not Required to Collect PFC'S: Part 135 air taxi/commercial operators filing FAA Form 1800–31.

Determination: Approved. Based on information submitted in the public agency's application, the FAA has determined that the proposed class accounts for less than 1 percent of the total annual enplanements at Buffalo Niagara International Airport (BUF).

Brief Description of Projects Approved for Collection At BUF And Use At BUF At A $4.50 PFC Level: Runway 14 runway protection zone land acquisition.

West side waterline replacement.

Brief Description of Projects Approved for Collection At BUF And Use At BUF At A $3.00 PFC Level: Upgrade terminal restrooms.

Liquid chemical storage facility.

New aircraft rescue and firefighting station (design only).

Brief Description of Project Approved For Collection At BUF And Use At Niagara Falls International Airport At A $4.50 PFC Level: Runway 6/24 runway safety area improvements, phase 2.

Brief Description of Disapproved Project: Purchase of security equipment.

Determination: Disapproved. The project requested four vehicles; however airports of a similar size are typically eligible for only one vehicle. In addition, the public agency failed to provide required documentation that is necessary in order to establish PFC eligibility in accordance with § 158.15(b).

Brief Description of Withdrawn Projects: Salt barn.

Remain-overnight apron improvements.

Purchase passenger movement equipment.

Date of Withdrawal: April 4, 2014.

Decision Date: April 9, 2014.

FOR FURTHER INFORMATION CONTACT: Jeffrey Breeden, Washington Airports District Office, (703) 661–1363.

Public Agency: City of Atlanta, Georgia.

Application Number: 14–05–C–00–ATL.

Application Type: Impose and use a PFC.

PFC Level: $4.50.

Total PFC Revenue Approved In This Decision: $23,550,000.

Earliest Charge Effective Date: December 1, 2023.

Estimated Charge Expiration Date: February 1, 2024.

Class of Air Carriers Not Required To Collect PFC'S: Air taxi/commercial operators when enplaning revenue passengers in limited, irregular, special service air taxi/commercial operations such as air ambulance services, student instruction, and non-stop sightseeing flights that begin and end at Hartsfield-Jackson Atlanta International Airport (ATL) and are concluded within a 25-mile radius of the airport.

Determination: Approved. Based on information submitted in the public agency's application, the FAA has determined that the proposed class accounts for less than 1 percent of the total annual enplanements at ATL.

Brief Description of Project Approved for Collection At And Use At A $4.50 Pfc Level: Concourse T-north optimization, phase 3.

Brief Description of Withdrawn Project: Drainage improvements for land acquisition for airport expansion east.

Date of Withdrawal: January 8, 2014.

Decision Date: April 10, 2014.

FOR FURTHER INFORMATION CONTACT: Parks Preston, Atlanta Airports District Office, (404) 305–7149.

Public Agency: City of Hailey and County of Blaine, Hailey, Idaho.

Application Number: 14–09–C–00–SUN.

Application Type: Impose and use a PFC.

PFC Level: $4.50.

Total PFC Revenue Approved In This Decision: $2,787,259.

Earliest Charge Effective Date: July 1, 2014.

Estimated Charge Expiration Date: July 1, 2028.

Class of Air Carriers Not Required To Collect PFC'S: Air taxi/commercial operators filing FAA Form 1800–31.

Determination: Approved. Based on information submitted in the public agency's application, the FAA has determined that the proposed class accounts for less than 1 percent of the total annual enplanements at Friedman Memorial Airport.

Brief Description of Projects Approved For Collection And Use: Runway safety area formulation.

Acquire snow removal equipment.

Master plan.

Relocate southwest taxilane bypass.

Relocate general aviation apron.

Perimeter fence relocation.

Runway safety area grading.

Relocate taxiway A and obliterate taxiway B.

Relocate power supply to precision approach path indicator.

Relocate automated weather observing system.

Relocate snow removal equipment/aircraft rescue and firefighting building.

Relocate terminal area apron.

Relocate cargo apron.

Relocate hangars.

Rehabilitate terminal building.

Relocate north taxilane.

Relocate central bypass apron.

Runway rehabilitation.

PFC administration.

Decision Date: April 11, 2014.

FOR FURTHER INFORMATION CONTACT: Jason Garwood, Helena Airports District Office, (406) 449–5078.

Public Agency: Port of Pasco, Pasco, Washington.

Application Number: 14–10–C–00–PSC.

Application Type: Impose and use a PFC.

PFC Level: $4.50.

Total PFC Revenue Approved In This Decision: $40,881,455.

Earliest Charge Effective Date: August 1, 2023.

Estimated Charge Expiration Date: August 1, 2045.

Class Of Air Carriers Not Required To Collect PFC'S: None.

Brief Description of Project Approved for Collection And Use: Terminal building reconfiguration and expansion.

Decision Date: April 11, 2014.

FOR FURTHER INFORMATION CONTACT: Trang Tran, Seattle Airports District Office, (425) 227–1662.

Public Agency: Peninsula Airport Commission, Newport News, Virginia.

Application Number: 14–04–U–00–PHF.

Application Type: Use PFC revenue.

PFC Level: $4.50.

Total PFC Revenue Approved For Use In This Decision: $1,452,511.

Estimated Charge Effective Date: May 1, 2026.

Estimated Charge Expiration Date: December 1, 2037.

Class of Air Carriers Not Required To Collect PFC'S: No change from previous decision.

Brief Description of Project Approved For Use: Taxiway A (construction).

Decision Date: April 16, 2014.

FOR FURTHER INFORMATION CONTACT: Jeffrey Breeden, Washington Airports District Office, (703) 661–1363.

Public Agency: Capital Region Airport Commission, Richmond, Virginia.

Application Number: 14–06–C–00–RIC.

Application Type: Impose and use a PFC.

PFC Level: $4.50.

Total PFC Revenue Approved In This Decision: $34,350,000.

Earliest Charge Effective Date: October 1, 2019.

Estimated Charge Expiration Date: March 1, 2025.

Class of Air Carriers Not Required to Collect PFC'S: Part 135 on-demand air taxi/commercial operators filing FAA Form 1800–31.

Determination: Approved. Based on information submitted in the public agency's application, the FAA has determined that the proposed class accounts for less than 1 percent of the total annual enplanements at MOB.

Brief Description of Projects Approved for Collection And Use: Reconstruction and realignment of taxiway M.

East side roadway and utilities project.

Professional services PFC preparation and administration.

Brief Description of Projects Approved for Collection: Construct snow removal equipment building.

Construct cargo apron improvements.

Construct general aviation apron improvements.

Reconstruction of taxiway E and portions of taxiway L.

Decision Date: April 16, 2014.

FOR FURTHER INFORMATION CONTACT: Jeffrey Breeden, Washington Airports District Office, (703) 661–1363.

Public Agency: County of Sonoma, Santa Rosa, California.

Application Number: 14–06–C–00–STS.

Application Type: Impose and use a PFC.

PFC Level: $4.50.

Total PFC Revenue Approved In This Decision: $8,039,573.

Earliest Charge Effective Date: June 1, 2014.

Estimated Charge Expiration Date: April 1, 2026.

Class of Air Carriers Not Required To Collect Pfc's: None.

Brief Description of Projects Approved for Collection And Use: Terminal building renovation and expansion.

Runway safety area enhancement.

Decision Date: April 22, 2014.

FOR FURTHER INFORMATION CONTACT: Neil Kumar, San Francisco Airports District Office, (650) 827–7627.

AMENDMENTS TO PFC APPROVALS

Amendment No. city, state	Amendment approved date	Original approved net PFC revenue	Amended approved net PFC revenue	Original estimated charge exp. date	Amended estimated charge exp. date
12–04–C–01–DAL Dallas, TX	04/03/14	$13,637,816	$13,037,816	10/01/27	10/01/27
10–02–C–02–PHF Newport News, VA	04/10/14	15,866,709	20,114,239	03/01/17	05/01/26
12–03–C–01–PHF Newport News, VA	04/10/14	12,090,644	18,017,555	03/01/22	12/01/37
08–09–C–01–BLI Bellingham, WA	04/10/14	2,548,830	2,250,912	09/01/14	07/01/10
05–06–C–01–ISP Islip, NY	04/23/14	37,133,218	36,789,972	08/01/15	07/01/15

Issued in Washington, DC, on May 23, 2014.

Joe Hebert,

Manager, Financial Analysis and Passenger Facility Charge Branch.

[FR Doc. 2014–12685 Filed 5–30–14; 8:45 am]

BILLING CODE 4910–13–P

DEPARTMENT OF TRANSPORTATION

Federal Aviation Administration

Notice of Passenger Facility Charge (PFC) Approvals and Disapprovals

AGENCY: Federal Aviation Administration (FAA), DOT.

ACTION: Monthly Notice of PFC Approvals and Disapprovals. In February 2014, there were three applications approved. This notice also includes information on one application, approved in April 2012, inadvertently left off the April 2012 notice. Additionally, seven approved amendments to previously approved applications are listed.

SUMMARY: The FAA publishes a monthly notice, as appropriate, of PFC approvals and disapprovals under the provisions of the Aviation Safety and Capacity Expansion Act of 1990 (Title IX of the Omnibus Budget Reconciliation Act of 1990) (Pub. L. 101–508) and Part 158 of the Federal Aviation Regulations (14 CFR Part 158). This notice is published pursuant to paragraph d of § 158.29.

PFC Applications Approved

Public Agency: City of San Angelo, Texas.

Application Number: 12–09–C–00–SJT.

Application Type: Impose and use a PFC.

PFC Level: $4.50.

Total PFC Revenue Approved In This Decision: $745,385.

Earliest Charge Effective Date: August 1, 2014.

Estimated Charge Expiration Date: August 1, 2018.

Class of Air Carriers Not Required to Collect PFC'S: None.

Brief Description of Projects Approved for Collection and Use: Improve terminal building.

PFC application no. 9.

Wildlife hazard assessment.

Airport layout plan update.

Decision Date: April 12, 2012.

FOR FURTHER INFORMATION CONTACT: Marcelino Sanchez, Texas Airports Development Office, (817) 222–5652.

Public Agency: Dickinson Municipal Airport Authority, Dickinson, North Dakota.

Application Number: 14–01–C–00–DIK.

Application Type: Impose and use a PFC.

PFC Level: $4.50.

Total PFC Revenue Approved In This Decision: $714,384.

Earliest Charge Effective Date: April 1, 2014.

Estimated Charge Expiration Date: June 1, 2020.

Class of Air Carriers Not Required to Collect PFC'S: None.

Brief Description of Projects Approved for Collection and Use: Install guidance signs (electric items and signs).

Extend and mark runway 14/32 (1,200 feet by 75 feet).

Light runway 14/32 (1,200 feet by 75 feet).

Reconstruct and mark taxiway B (630 feet by 40 feet).

Light taxiway B (630 feet by 40 feet).

Construct and mark taxiway C (1,125 feet by 35 feet) and taxiway D (1,550 feet by 35 feet).

Light taxiway C (1,125 feet by 35 feet) and taxiway D (1,550 feet by 35 feet).

Relocate visual approach slope indicator-4 system.

Relocate supplemental wind cone.

Install runway end identifier lights.

Install airport guidance signs.

Electrical vault and electrical upgrades.

Signage upgrades.

Rehabilitate runway 7/25 (4,700 feet by 75 feet), phase I.

Install medium intensity runway lights for runway 7/25 (4,700 feet by 75 feet), phase I.

Install lighted signs for runway 7/25 (4,700 feet by 75 feet), phase I.

Rehabilitate taxiways B and F.
Install medium taxiway lights for taxiways B and F.
Rehabilitate runway 7/25 (4,700 feet by 75 feet), phase II.
Install medium intensity runway lights for runway 7/25 (4,700 feet by 75 feet), phase II.
Install lighted signs for runway 7/25 (4,700 feet by 75 feet), phase II.
Rehabilitate runway 14/32.
Rehabilitate taxiway A.
Rehabilitate apron area.
Install runway 14/32 lighting.
Relocate runway end identifier lights on runway 14.
Rehabilitate taxiway A (2,700 feet by 35 feet).
Install medium intensity taxiway lighting for taxiway A.
Design and construct new terminal building.
Construct taxiway for new terminal building.
Construct concrete apron for new terminal.
Improve terminal access road.
Install security fencing.
Install area lighting for new terminal.
Rehabilitate runway 7/25—crack seal and marking.
Rehabilitate taxiways—crack sealing and marking.
Rehabilitate general aviation apron.
Acquire snow removal equipment (loader with broom and plow blade).
Acquire friction testing equipment.
Update airport master plan study.
PFC application preparation cost.
Decision Date: February 10, 2014.

FOR FURTHER INFORMATION CONTACT: Nancy Nistler, Bismarck Airports District Office, (612) 253–4638.

Public Agency: City of Sioux City, Iowa.
Application Number: 14–06–C–00–SUX.
Application Type: Impose and use a PFC.
PFC Level: $4.50.
Total PFC Revenue Approved In This Decision: $831,205.
Earliest Charge Effective Date: July 1, 2014.
Estimated Charge Expiration Date: July 1, 2021.
Class of Air Carriers Not Required to Collect PFC's: None.
Brief Description of Projects Approved for Collection and Use: Snow removal equipment building.
Rehabilitate apron (design).
Rehabilitate apron (construction).
Acquire snow removal equipment (deicer).
Rehabilitate terminal building.
Rehabilitate terminal (loading bridge).
Install guidance signs.
Acquire snow removal equipment (broom).
Update airport master plan study.
Rehabilitate apron (taxiway).
Security enhancements.
Acquire snow removal equipment (broom).
Decision Date: February 20, 2014.

FOR FURTHER INFORMATION CONTACT: Sheila Bridges, Central Region Airports Division, (816) 329–2638.

Public Agency: City of Valdosta, Georgia.
Application Number: 14–11–C–00–VLD.
Application Type: Impose and use a PFC.
PFC Level: $4.50.
Total PFC Revenue Approved In This Decision: $247,442.
Earliest Charge Effective Date: April 1, 2014.
Estimated Charge Expiration Date: April 1, 2016.
Class of Air Carriers Not Required to Collect PFC'S: Air taxi/commercial operators operating at Valdosta Regional Airport (VLD).
Determination: Approved. Based on information contained in the public agency's application, the FAA has determined that the approved class accounts for less than 1 percent of the total annual enplanements at VLD.
Brief Description of Projects Approved for Collection and Use: Wildlife hazard assessment.
Design airfield electrical vault and backup generator.
Design commercial terminal apron expansion.
Design passenger boarding bridge for commercial terminal.
Weight bearing capacity study.
Construct airfield electrical vault and backup generator.
Prepare PFC application.
Wildlife hazard management plan.
Construct commercial terminal apron expansion.
Brief Description of Disapproved Project: Runway 17 safety area improvements.
Detrmination: Disapproved. This project is not PFC eligible.
Decision Date: February 26, 2014.

FOR FURTHER INFORMATION CONTACT: Parks Preston, Atlanta Airports District Office, (404) 305–7149.

AMENDMENTS TO PFC APPROVALS

Amendment No. city, state	Amendment approved date	Original approved net PFC revenue	Amended approved net PFC revenue	Original estimated charge exp. date	Amended estimated charge exp. date
05–01–C–01–CIU Kincheloe, MI	2/06/14	$1,087,463	$1,050,115	07/01/23	02/01/23
04–02–C–01–LMT Klamath Falls, OR	2/06/14	877,799	718,606	12/01/11	12/01/11
06–10–C–01–CMX Calumet, MI	2/07/14	130,367	125,592	11/01/07	06/01/07
01–06–C–02–ESC Escanaba, MI	2/21/14	114,900	78,073	03/01/04	03/01/04
06–08–C–01–ESC Escanaba, MI	2/21/14	322,158	322,158	04/01/14	04/01/14
07–04–C–01–GRR Grand Rapids, MI	2/21/14	5,525,000	7,403,893	05/01/19	12/01/19
00–02–C–02–JNU Juneau, AK	2/24/14	407,248	386,514	02/01/01	02/01/01

Issued in Washington, DC, on May 23, 2014.

Joe Hebert,

Manager, Financial Analysis and Passenger Facility Charge Branch.

[FR Doc. 2014–12678 Filed 5–30–14; 8:45 am]

BILLING CODE 4910–13–P

DEPARTMENT OF TRANSPORTATION

Federal Aviation Administration

Notice of Opportunity for Public Comment on Surplus Property Release at Columbia Metropolitan Airport, Columbia, South Carolina

AGENCY: Federal Aviation Administration (FAA), DOT.

ACTION: Notice.

SUMMARY: Under the provisions of Title 49, U.S.C. Section 47151(d), notice is being given that the Federal Aviation Administration (FAA) is considering a request from the Richland-Lexington Airport District to waive the requirement that two parcels (3.51 acres and 3.68 acres) of surplus property, located at the Columbia Metropolitan

Airport be used for aeronautical purposes. Currently, ownership of the property provides for protection of FAR Part 77 surfaces and compatible land use which would continue to be protected with deed restrictions required in the transfer of land ownership.

DATES: Comments must be received on or before July 2, 2014.

ADDRESSES: Documents are available for review by prior appointment at the following location: Atlanta Airports District Office, Attn: Rob Rau, South Carolina Planner, 1701 Columbia Ave., Suite 2–260, College Park, Georgia 30337–2747, Telephone: (404) 305–7004.

Comments on this notice may be mailed or delivered in triplicate to the FAA at the following address: Atlanta Airports District Office, Attn: Rob Rau, South Carolina Planner, 1701 Columbia Ave., Suite 2–260, College Park, Georgia 30337–2747.

In addition, one copy of any comments submitted to the FAA must be mailed or delivered to Dan Mann, A.A.E., Executive Director, Richland-Lexington Airport District at the following address: Columbia Metropolitan Airport, 125 A Summer Lake Drive, West Columbia, South Carolina 29170.

FOR FURTHER INFORMATION CONTACT: Rob Rau, South Carolina Planner, Atlanta Airports District Office, 1701 Columbia Ave., Suite 2–260, College Park, Georgia 30337–2747, (404) 305–7004. The application may be reviewed in person at this same location.

SUPPLEMENTARY INFORMATION: The FAA is reviewing a request by the Richland-Lexington Airport District to release two parcels of surplus property (3.51 acres and 3.68 acres) at the Columbia Metropolitan Airport. These parcels were originally conveyed to the County of Lexington on April 7, 1947 under the powers and authority contained in the provisions of the Surplus Property Act of 1944 and subsequently transferred to the Richland-Lextington Airport District on July 12, 1962. Currently, the surplus properties are being used on an infrequent basis by the Midlands Technical College.

Any person may inspect the request in person at the FAA office listed above under **FOR FURTHER INFORMATION CONTACT**.

In addition, any person may, upon request, inspect the request, notice and other documents germane to the request in person at the Columbia Metropolitan Airport.

Issued in Atlanta, Georgia on May 22, 2014.

Larry F. Clark,

Assistant Manager, Atlanta Airports District Office Southern Region.

[FR Doc. 2014–12687 Filed 5–30–14; 8:45 am]

BILLING CODE 4910–13–P

DEPARTMENT OF TRANSPORTATION

Federal Aviation Administration

Public Notice for Waiver of Aeronautical Land-Use Assurance

AGENCY: Federal Aviation Administration (FAA), DOT.

ACTION: Notice of intent of waiver with respect to land; Alpena County Regional Airport, Alpena, MI.

SUMMARY: The FAA is considering a proposal to change approximately 126.12 acres of airport land from aeronautical use to non-aeronautical use at Alpena County Regional Airport, Alpena, MI. The aforementioned land is not needed for aeronautical use and will be used for revenue producing, non-aeronautical purposes.

The property is located west of Airport Road and north of Highway M–32. The property is currently vacant. The airport intends to market this property for lease to non-aeronautical businesses.

DATES: Comments must be received on or before July 2, 2014.

ADDRESSES: Documents are available for review by appointment at the FAA Airports District Office, Alex Erskine, Program Manager, 11677 South Wayne Road, Suite 107, Romulus, Michigan 48174, Telephone: (734) 229–2900/Fax: (734) 229–2950 and Alpena County Regional Airport, 1617 Airport Road, Alpena, Michigan 49707, Telephone (989) 354–2907.

Written comments on the Sponsor's request must be delivered or mailed to: Alex Erskine, Program Manager, Federal Aviation Administration, Airports District Office, 11677 South Wayne Road, Suite 107, Romulus, Michigan 48174, Telephone Number: (734) 229–2900/FAX Number: (734) 229–2950.

FOR FURTHER INFORMATION CONTACT: Alex Erskine, Program Manager, Federal Aviation Administration, Airports District Office, 11677 South Wayne Road, Suite 107, Romulus, Michigan 48174. Telephone Number: (734) 229–2900/FAX Number: (734) 229–2950.

SUPPLEMENTARY INFORMATION: In accordance with section 47107(h) of Title 49, United States Code, this notice is required to be published in the **Federal Register** 30 days before modifying the land-use assurance that requires the property to be used for an aeronautical purpose.

The property is currently vacant and is not needed for current or future aeronautical purposes. Approximately 86.27 acres of the property was transferred to Alpena County under the provisions of the Federal Property and Administrative Services Act of 1949 and the Surplus Property Act of 1944. The remaining 39.85 acres was purchased by the County in 1987 with local funds. The airport intends to market this property for commercial non-aeronautical uses. Lease rates will be consistent with fair market value of the land.

The sponsor will control use of the parcel(s) through the terms and conditions of a ground lease(s). The lease will be subordinate to the sponsor's existing grant assurances. This will ensure that all activities contemplated on the parcel will be compatible with FAA requirements and airport operations. The proceeds from the lease of the airport property will be in accordance with FAA's Policy and Procedures Concerning the Use of Airport Revenue, published in the **Federal Register** on February 16, 1999 (64 FR 7696).

This notice announces that the FAA is considering the release of the subject airport property at the Alpena County Regional Airport, Alpena, Michigan from its obligations to be maintained for aeronautical purposes. Approval does not constitute a commitment by the FAA to financially assist in the disposal of the subject airport property nor a determination of eligibility for grant-in-aid funding from the FAA.

Description For This Survey: A PARCEL OF LAND IN THE WEST ½ OF SECTION 22, T31N, R7E, WILSON TOWNSHIP, ALPENA COUNTY, MICHIGAN, LYING WESTERLY OF THE CENTERLINE OF THE AIRPORT ENTRANCE ROAD, BEING MORE PARTICULARLY DESCRIBED AS FOLLOWS: COMMENCING AT THE NORTHWEST CORNER OF SECTION 22, T31N, R7E; THENCE S 02°07′50″ E 1420.29 FEET ALONG THE WEST LINE OF SAID SECTION 22 TO THE POINT OF BEGINNING; THENCE CONTINUING S 02°07′50″ E 1216.60 FEET ALONG THE WEST LINE OF SAID SECTION 22 TO THE WEST ¼ CORNER OF SAID SECTION 22; THENCE S 02°10′57″ E 2633.28 FEET ALONG THE WEST LINE OF SAID SECTION 22 TO THE SOUTHWEST CORNER OF SAID SECTION 22; THENCE N 88°55′32″ E 1442.38 FEET ALONG THE SOUTH LINE OF SAID SECTION 22 TO THE CENTERLINE OF

THE AIRPORT ENTRANCE ROAD; THENCE N 01°17′59″ W 454.13 FEET ALONG SAID ROAD CENTERLINE; THENCE S 88°37′07″ W 213.79 FEET; THENCE N 01°23′43″ W 137.98 FEET; THENCE N 88°37′07″ E 214.02 FEET TO THE CENTERLINE OF SAID AIRPORT ENTRANCE ROAD; THENCE N 01°17′59″ W 1681.87 FEET ALONG SAID ROAD CENTERLINE; THENCE S 88°42′01″ W 278.00 FEET; THENCE N 01°17′59″ W 150.00 FEET PARALLEL WITH SAID ROAD CENTERLINE; THENCE N 88°42′01″ E 278.00 FEET TO SAID ROAD CENTERLINE; THENCE N 01°17′59″ W 260.50 FEET ALONG SAID ROAD CENTERLINE; THENCE S 88°42′01″ W 550.00 FEET; THENCE N 01°17′59″ W 200.00 FEET PARALLEL WITH SAID ROAD CENTERLINE; THENCE N 88°42′01″ E 541.38 FEET TO SAID ROAD CENTERLINE; THENCE 304.69 FEET ALONG THE CENTERLINE OF SAID ROAD AND THE ARC OF A CURVE TO THE LEFT HAVING A RADIUS OF 825.00 FEET A DELTA ANGLE OF 21°09′39″ AND LONG CHORD BEARING N 20°10′10″ W 302.97 FEET; THENCE N 30°44′59″ W 371.11 FEET ALONG SAID ROAD CENTERLINE TO THE SOUTHERLY LINE OF THE EXCLUSIVE USE LEASE PARCEL OF THE UNITED STATE OF AMERICA; THENCE S 58°55′22″ W 32.43 FEET ALONG SAID LEASE LINE TO THE RIGHT OF WAY LINE OF AIRPORT ROAD; THENCE N 30°46′02″ W 994.76 FEET ALONG SAID LEASE LINE AND THE 33 FOOT RIGHT OF WAY LINE OF AIRPORT ROAD TO A POINT 100 FEET SOUTH OF AND AT A RIGHT ANGLE TO THE SOUTHERLY LINE OF THE APPROACH CLEARANCE AREA TO RUNWAY 7–25 AS EXTENDED; THENCE S 53°31′18″ W 849.07 FEET PARALLEL TO AND 100 FEET SOUTHERLY OF AND AT RIGHT ANGLES TO SAID SOUTHERLY LINE OF THE APPROACH CLEARANCE AREA TO RUNWAY 7–25 AS EXTENDED, BACK TO THE POINT OF BEGINNING. SAID PARCEL CONTAINING 126.12 ACRES, MORE OR LESS. BEING SUBJECT TO A CONSERVATION EASEMENT ON THE NORTH 700 FEET OF THE SW ¼ OF SAID SECTION 22, T31N, R7E, LESS THE NORTH, WEST AND EAST 75 FEET THEREOF. ALSO SUBJECT TO A RIGHT OF WAY OVER AND UPON THE SOUTH FOR STATE HIGHWAY M–32. ALSO SUBJECT TO A RIGHT OF WAY OVER AND UPON THE EASTERLY 50 FEET OF THE SOUTHERLY 3,494 FEET THEREOF FOR AIRPORT ROAD. ALSO SUBJECT TO ANY OTHER EASEMENTS, RESERVATIONS AND RESTRICTIONS, IF ANY.

Issued in Romulus, Michigan, on May 12, 2014.

John L. Mayfield, Jr.,

Manager, Detroit Airports District Office, FAA, Great Lakes Region.

[FR Doc. 2014–12677 Filed 5–30–14; 8:45 am]

BILLING CODE 4910–13–P

DEPARTMENT OF TRANSPORTATION

Federal Aviation Administration

Public Notice for Waiver of Aeronautical Land-use Assurance

AGENCY: Federal Aviation Administration, DOT.

ACTION: Notice of intent of waiver with respect to land; Scott AFB/MidAmerica Airport, Belleville, Illinois.

SUMMARY: The Federal Aviation Administration (FAA) is considering a proposal to change 47.2262 acres of airport land from aeronautical use to non-aeronautical use and to authorize the sale of airport property located at Scott AFB/MidAmerica Airport, Belleville, Illinois. The aforementioned land is not needed for aeronautical use.

The St. Clair County Highway Department, in cooperation with the Federal Highway Administration (FHWA) and Illinois Department of Transportation are sponsoring a project to directly link Scott Air Force with the interstate system by constructing a new interchange on Interstate 64 at the Reider Road overpass (Mile Marker 21). St. Clair County, as the airport sponsor, plans to sell the subject property at fair market value to the St. Clair County Highway Department and Illinois Department of Transportation for the project.

DATES: Comments must be received on or before July 2, 2014.

ADDRESSES: Documents are available for review by appointment at the FAA Airports District Office, Gary D. Wilson, Program Manager, Federal Aviation Administration, Chicago Airports District Office, 2300 East Devon Avenue, Des Plaines, Illinois, 60018. Telephone Number 847–294–7631/FAX Number 847–294–7046 and Scott AFB/MidAmerica Airport, 9656 Air Terminal Drive, Ste 100, Mascoutah, Illinois 62258–5501, and (618) 566–5200/Fax: (618) 566–5299.

Written comments on the Sponsor's request must be delivered or mailed to Mr. Gary D. Wilson, Program Manager, Federal Aviation Administration, Chicago Airports District Office, 2300 East Devon Avenue, Des Plaines, Illinois 60018. Telephone: (847) 294–7631/Fax: (847) 294–7046.

FOR FURTHER INFORMATION CONTACT: Mr. Gary D. Wilson, Program Manager, Federal Aviation Administration, Chicago Airports District Office, 2300 E. Devon Avenue, Des Plaines, Illinois 60018. Telephone: (847) 294–7631/Fax: (847) 294–7046.

SUPPLEMENTARY INFORMATION: In accordance with section 47107(h) of Title 49, United States Code, this notice is required to be published in the **Federal Register** 30 days before modifying the land-use assurance that requires the property to be used for an aeronautical purpose.

The portion of airport property considered for release from federal obligation is located in the northwest quadrant of the airport along I64. The land parcels are associated with the following Airport Improvement Program Grant numbers: 3–17–0145–04–1991; 3–17–0145–06–1992; 3–17–0145–07–1993; 3–17–0145–08–1994, and 3–17–0146–18–2002. Currently, ownership of the property provides for protection of part 77 surfaces and compatible land use. On September 16, 1991, the Deputy Assistant Secretary of the Air Force (Installations) and the St. Clair County, executed a Joint Use Agreement to develop the Scott-Joint Use Project by acquiring land adjacent to Scott AFB. St. Clair County acquired 4,175 acres of land during the period of 1992 through 1995.

The disposition of proceeds from the sale of the airport property will be in accordance with FAA's Policy and Procedures Concerning the Use of Airport Revenue, published in the **Federal Register** on February 16, 1999 (64 FR 7696).

This notice announces that the FAA is considering the release of the subject property at Scott AFB/MidAmerica Airport, Belleville, Illinois, from Federal land covenants, subject to a reservation for continuing right of flight as well as restrictions on the released property as required in FAA Order 5190.6B, section 22.16. Approval does not constitute a commitment by the FAA to financially assist in the disposal of the subject airport property nor a determination of eligibility for grant-in-aid funding from the FAA.

Parcel 100002TK1 Legal Description

Part of Lot 7 in the North Half of Section 2 in Township 1 North, Range 7 West of the Third Principal Meridian, St. Clair County, Illinois, reference being had to the plat thereof recorded in the Recorder's Office of St. Clair County, Illinois, in Book of Plats ''A'', on Page 255, described as follows:

Commencing at an iron rod set at the southwest corner of the Northwest Quarter of said Section 2; thence on an assumed bearing of North 00 degrees 11 minutes 45 seconds West on the west line of said Northwest Quarter, 50.00 feet to the north right of way line of Wherry Road (SA Route 82), as described in the Deed for Right-of-Way for Public Road Purposes to the County of St. Clair recorded in Book 969, Page 573 on July 23, 1951 and shown in Plat Book 45, Pages 104–105 in said Recorder's Office, also being the Point of Beginning.

From said Point of Beginning; thence continuing North 00 degrees 11 minutes 45 seconds West on the west line of said Northwest Quarter, 10.00 feet; thence South 89 degrees 56 minutes 49 seconds East, 394.54 feet; thence North 88 degrees 37 minutes 16 seconds East, 600.19 feet; thence South 89 degrees 56 minutes 48 seconds East, 122.15 feet; thence North 80 degrees 59 minutes 26 seconds East, 41.77 feet to the westerly right of way line of Rieder Road (also known as Township Road 222, and formerly known as Reuss Road), as described in the Deed for Right-of-Way for Public Road Purposes to the Town of Shiloh Valley as recorded in Book 1455, Page 165 on September 11, 1956 and shown in Plat Book 45, Page 38 in said Recorder's Office; thence South 11 degrees 42 minutes 59 seconds West on said westerly right of way line of Rieder Road, 46.89 feet; thence South 50 degrees 59 minutes 06 seconds West, 23.23 feet to the north right of way line of the aforesaid Wherry Road; thence the following five (5) courses and distances on said north right of way line of Wherry Road: (1) Thence North 89 degrees 44 minutes 49 seconds West, 178.98 feet ; (2) thence North 00 degrees 02 minutes 53 seconds East, 8.36 feet; (3) thence North 89 degrees 56 minutes 48 seconds West, 422.40 feet; (4) thence westerly 205.86 feet on a curve to the left, having a radius of 1,056.16 feet, a chord bearing North 84 degrees 21 minutes 46 seconds West, 205.54 feet; (5) thence North 89 degrees 56 minutes 48 seconds West, 324.45 feet to the Point of Beginning.

Said Parcel 100002TK1 herein described contains 0.7785 acre or 33,913 square feet, more or less.

Parcel 100002TK2 Legal Description

Part of Lot 7 in the North Half of Section 2 in Township 1 North, Range 7 West of the Third Principal Meridian, St. Clair County, Illinois, reference being had to the plat thereof recorded in the Recorder's Office of St. Clair County, Illinois, in Book of Plats ''A'', on Page 255, described as follows:

Commencing at an iron rod set at the southwest corner of the Northwest Quarter of said Section 2; thence on an assumed bearing of South 89 degrees 46 minutes 42 seconds East on the south line of the Northwest Quarter of said Section 2, a distance of 1,211.13 feet to the easterly right of way line of Rieder Road (also known as Township Road 222, and formerly known as Reuss Road), as described in the Deed for Right-of-Way for Public Road Purposes to the Town of Shiloh Valley as recorded in Book 1455, Page 165 on September 11, 1956 and shown in Plat Book 45, Page 38 in said Recorder's Office, also being the Point of Beginning.

From said Point of Beginning; thence the following three (3) courses and distances on said easterly right of way line of Rieder Road: (1) Thence North 00 degrees 17 minutes 15 seconds East, 24.30 feet; (2) thence North 39 degrees 05 minutes 09 seconds West, 19.01 feet; (3) thence North 11 degrees 43 minutes 01 seconds East, 55.67 feet; thence North 80 degrees 59 minutes 26 seconds East, 137.32 feet; thence South 00 degrees 00 minutes 04 seconds West, 115.59 feet; thence North 89 degrees 46 minutes 42 seconds West, 135.07 feet to the Point of Beginning.

Said Parcel 100002TK2 herein described contains 0.3341 acre or 14,555 square feet, more or less.

Parcel 100011TK1 Legal Description

Part of Lot 1 in the North One Half of Section 2 in Township 1 North, Range 7 West of the Third Principal Meridian, St. Clair County, Illinois, reference being had to the plat thereof recorded in the Recorder's Office of St. Clair County, Illinois, in Book of Plats ''A'', on Page 255, described as follows:

Commencing at an iron rod set at the northwest corner of the Northwest Quarter of said Section 2; thence on an assumed bearing of South 89 degrees 10 minutes 52 seconds East on the north line of said Northwest Quarter, 1,010.90 feet to the northwest corner of said Lot 1 in the North One Half of Section 2; thence South 00 degrees 11 minutes 45 seconds East on the west line of said Lot 1, a distance of 14.98 feet to the south right of way line of O'Fallon-Shiloh Township Road (being 50 feet wide and also known as Township Road 61A), as described in the Deed for Right-of-Way for Public Road Purposes to the Town of Shiloh Valley as recorded in Book 969, Page 214 on January 9, 1943 and as shown in Book of Plats 42, Page 89 and being the Point of Beginning.

From said Point of Beginning; thence South 89 degrees 10 minutes 58 seconds East, 1,117.70 feet; thence South 16 degrees 20 minutes 32 seconds West, 67.32 feet; thence westerly 174.70 feet on a curve to the left having a radius of 765.00 feet, a chord bearing of North 82 degrees 38 minutes 25 seconds West, 174.32 feet; thence North 88 degrees 11 minutes 09 seconds West, 574.91 feet; thence North 89 degrees 10 minutes 57 seconds West, 351.05 feet to the west line of said Lot 1; thence North 00 degrees 11 minutes 45 seconds West on said west line, 35.01 feet to the Point of Beginning.

Said Parcel 100011TK1 herein described contains 1.0287 acres or 44,810 square feet, more or less.

Except all coal within and underlying the premises together will all mining rights and other rights, privileges and immunities relating thereto.

Parcel 200005PE1 Legal Description

Part of Lot 6 in the North One Half of Section 2 in Township 1 North, Range 7 West of the Third Principal Meridian, St. Clair County, Illinois, reference being had to the plat thereof recorded in the Recorder's Office of St. Clair County, Illinois, in Book of Plats ''A'', on Page 255, described as follows:

Commencing at an iron rod set at the northwest corner of the Northeast Quarter of said Section 2; thence on an assumed bearing of South 00 degrees 20 minutes 44 seconds East on the west line of said Northeast Quarter, 866.60 feet; thence South 89 degrees 14 minutes 05 seconds East, 146.29 feet to the easterly right of way line of Rieder Road (Township Road 222) at F.A.I. Route 64 as described in the Warranty Deed to the State of Illinois as recorded in Book 2003, Page 379 on March 16, 1966 in said Recorder's Office, and the Point of Beginning.

From said Point of Beginning; thence northeasterly on said easterly right of way line 99.38 feet on a curve to the left having a radius of 726.35 feet, a chord bearing North 12 degrees 17 minutes 12 seconds East, 99.31 feet; thence South 22 degrees 27 minutes 02 seconds East, 74.78 feet; thence South 13 degrees 55 minutes 09 seconds West, 39.15 feet; thence North 75 degrees 56 minutes 58 seconds West, 41.51 feet; to the point of beginning.

Said Parcel 200005PE1 herein described contains 0.0646 acre or 2,816 square feet, more or less.

Parcel 200005TK1 Legal Description

Part of Lot 6 in the North One Half of Section 2 in Township 1 North, Range 7 West of the Third Principal Meridian, St. Clair County, Illinois, reference being had to the plat thereof recorded in the Recorder's Office of St. Clair County,

Illinois, in Book of Plats ''A'', on Page 255, described as follows:

Commencing at an iron rod set at the northwest corner of the Northeast Quarter of said Section 2; thence on an assumed bearing of South 00 degrees 20 minutes 44 seconds East on the west line of said Northeast Quarter, 62.17 feet; thence South 71 degrees 54 minutes 26 seconds East, 182.67 feet to the Point of Beginning.

From said Point of Beginning; thence continuing South 71 degrees 54 minutes 26 seconds East, 258.33 feet; thence South 18 degrees 05 minutes 34 seconds West, 190.00 feet; thence North 71 degrees 54 minutes 26 seconds West, 94.01 feet; thence South 58 degrees 10 minutes 17 seconds West, 53.56 feet; thence southwesterly 159.26 feet on a curve to the left having a radius of 435.00 feet, a chord bearing South 07 degrees 22 minutes 46 seconds West, 158.37 feet; thence South 03 degrees 06 minutes 32 seconds East, 79.14 feet to the easterly right of way line of Rieder Road (Township Road 222) at F.A.I. Route 64 as described in the Warranty Deed to the State of Illinois as recorded in Book 2003, Page 379 on March 16, 1966 in said Recorder's Office; thence North 22 degrees 33 minutes 37 seconds West, 343.21 feet on said right of way line and the existing easterly right of way of Rieder Road (formerly known as Reuss Road) as described in the Deed for Right-of-Way for Public Road Purposes to the Town of Shiloh Valley recorded in Book 969, Page 348 on April 1, 1948 in said Recorder's Office; thence South 71 degrees 54 minutes 26 seconds East, 35.69 feet; thence North 18 degrees 05 minutes 34 seconds East, 200.00 feet to the Point of Beginning.

Said Parcel 200005TK1 herein described contains 1.6030 acre or 69,829 square feet, more or less.

Parcel 300011PE1 Legal Description

Part of Lot 14 in the South One Half of Section 2 in Township 1 North, Range 7 West of the Third Principal Meridian, St. Clair County, Illinois, reference being had to the plat thereof recorded in the Recorder's Office of St. Clair County, Illinois, in Book of Plats ''A'', on Page 255, described as follows:

Commencing at an iron rod set at the northwest corner of the Southwest Quarter of said Section 2; thence on an assumed bearing of South 89 degrees 46 minutes 42 seconds East on the north line of the Southwest Quarter of said Section 2, a distance of 1,109.28 feet; thence South 00 degrees 03 seconds 12 minutes West, 96.74 feet to the Point of Beginning.

From said Point of Beginning; thence continuing South 00 degrees 03 minutes 12 seconds West, 12.96 feet; thence southeasterly 241.03 feet on a curve to the left, having a radius of 365.00 feet, a chord bearing South 18 degrees 51 minutes 50 seconds East, 236.67 feet; thence southeasterly 285.95 feet on a curve to the right, having a radius of 1,091.16 feet, a chord bearing South 30 degrees 16 minutes 27 seconds East, 285.13 feet; thence South 67 degrees 14 minutes 00 seconds West, 35.00 feet to the northeasterly right of way line of Wherry Road (State Aid Route 82) as described in the Deed for Right-of-Way for Public Road Purposes to the County of St. Clair and recorded in Book 1245, Page 68 on July 23, 1951 in said Recorder's Office and as shown in Book of Plats Book 45, Pages 104–105; thence the following two (2) courses and distances on said northeasterly right of way line: (1) Thence northwesterly 668.58 feet on a curve to the left, having a radius of 1,056.16 feet, a chord bearing North 40 degrees 54 minutes 06 seconds West, 657.47 feet; thence South 89 degrees 56 minutes 48 seconds East, 242.51 to the Point of Beginning.

Said Parcel 300011PE1 herein described contains 0.8478 acre or 36,929 square feet, more or less.

Parcel 300011TK1 Legal Description

Part of Lot 14 in the South One Half of Section 2 in Township 1 North, Range 7 West of the Third Principal Meridian, St. Clair County, Illinois, reference being had to the plat thereof recorded in the Recorder's Office of St. Clair County, Illinois, in Book of Plats ''A'', on Page 255, described as follows:

Commencing at an iron rod set at the northwest corner of the Southwest Quarter of said Section 2; thence on an assumed bearing of South 00 degrees 33 minutes 02 seconds East on the west line of the Southwest Quarter of said Section 2, a distance of 50.00 feet to the existing southerly right of way line of Wherry Road (State Aid Route 82) as described in the Deed for Right-of-Way for Public Road Purposes to the County of St. Clair and recorded in Book 1245, Page 68 on July 23, 1951 in said Recorder's Office and as shown in said Book of Plats Book 45, Pages 104–105, and the Point of Beginning.

From said Point of Beginning; thence South 89 degrees 56 minutes 49 seconds East, 323.71 feet on the said southerly right of way line; thence southeasterly 310.58 feet on said southerly right of way line, being a curve to the right having a radius of 956.16 feet, a chord bearing South 80 degrees 38 minutes 29 seconds East, 309.22 feet; thence North 89 degrees 56 minutes 48 seconds West, 35.11 feet; thence North 78 degrees 38 minutes 13 seconds West, 203.96 feet; thence North 89 degrees 56 minutes 48 seconds West, 393.65 feet to the west line of said Section 2; thence North 00 degrees 33 minutes 02 seconds West, 10.00 feet to the Point of Beginning.

Said Parcel 300011TK1 herein described contains 0.1529 acre or 6661 square feet, more or less.

Parcel 300011TK2 Legal Description

Part of Lots 9 and 14 in the South One Half of Section 2 in Township 1 North, Range 7 West of the Third Principal Meridian, St. Clair County, Illinois, reference being had to the plat thereof recorded in the Recorder's Office of St. Clair County, Illinois, in Book of Plats ''A'', on Page 255, described as follows:

Commencing at an iron rod set at the northwest corner of the Southwest Quarter of said Section 2; thence on an assumed bearing of South 89 degrees 46 minutes 42 seconds East on the north line of the Southwest Quarter of said Section 2, a distance of 1,211.13 feet to the Point of Beginning.

From said Point of Beginning; thence continuing South 89 degrees 46 minutes 42 seconds East on the north line of the said Southwest Quarter, 135.07 feet; thence South 00 degrees 00 minutes 04 seconds West, 96.04 feet; thence North 89 degrees 56 minutes 48 seconds West, 479.51 feet to the northeasterly right of way line of Wherry Road (State Aid Route 82) as described in the Deed for Right-of-Way for Public Road Purposes to the County of St. Clair and recorded in Book 1245, Page 68 on July 23, 1951 in said Recorder's Office and as shown in Book of Plats Book 45, Pages 104–105; thence northwesterly 130.60 feet on said northeasterly right of way line, being a curve to the left having a radius of 1,056.16 feet, a chord bearing North 62 degrees 34 minutes 46 seconds West, 130.52 feet to the southerly right of way line of Rieder Road (TR 222) as shown in said Plat Book 45, Pages 104–105; thence the following four (4) courses and distances on said south right of way line of Rieder Road: (1) Thence South 89 degrees 56 minutes 49 seconds East, 350.34 feet; (2) thence North 00 degrees 03 minutes 24 seconds East, 11.12 feet; (3) thence South 89 degrees 44 minutes 49 seconds East; 109.82 feet; (4) thence North 00 degrees 17 minutes 15 seconds East, 25.70 feet to the Point of Beginning.

Said Parcel 300011TK2 herein described contains 0.8762 acre or 38,169 square feet, more or less.

Parcel 400005TK1 Legal Description

Part of the south 20 feet of the North Half of the Southeast Quarter of Section 35, Township 2 North, Range 7 West of the Third Principal Meridian, St. Clair

County, Illinois, reference being had to the plat thereof recorded in the Recorder's Office of St. Clair County, Illinois, in Book of Plats ''A'', Page 260,

Commencing at an iron rod found at the southwest corner of the Southeast Quarter of said Section 35; thence on an assumed bearing of North 00 degrees 23 minutes 54 seconds West on the west line of the Southeast Quarter of said Section 35, a distance of 1,316.95 feet to southwest corner of the Northwest Quarter of the Southeast Quarter of Section 35; thence continuing on said west line North 00 degrees 23 minutes 54 seconds West, 20.01; thence South 89 degrees 00 minutes 44 seconds East, 15.00 feet to the former easterly right of way line of a public road now known as Rieder Road as shown in Book of Plats ''C'', Page 423 in said Recorder's Office and being the Point of Beginning.

From said Point of Beginning; thence continuing South 89 degrees 00 minutes 44 seconds East, 10.00 feet to the existing easterly right of way line of Rieder Road (also known as Township Road 222) as shown in Book of Plats 42, Page 159 in said Recorder's Office; thence continuing South 89 degrees 00 minutes 44 seconds East, 35.06 feet; thence South 00 degrees 24 minutes 06 seconds East, 20.01 feet to the south line of the Northwest Quarter of the Southeast Quarter of said Section 35; thence North 89 degrees 00 minutes 44 seconds West, 35.06 feet to said existing easterly right of way line of Rieder Road; thence continuing North 89 degrees 00 minutes 44 seconds West, 10.00 feet to the aforesaid former easterly right of way line; thence North 00 degrees 23 minutes 54 seconds West, 20.01 on said former easterly right of way line to the Point of Beginning.

Said Parcel 400005TK1 herein described contains 0.0207 acre or 901 square feet, more or less, of which 0.0046 acre or 200 square feet, more or less, has been previously used or dedicated for highway purposes as shown in Book of Plats 42, on Page 159 in the Recorder's Office of St. Clair County, Illinois.

Excepting the coal underlying the surface of said land and all rights and easements in favor of the estate of said coal.

Parcel 8311011 Legal Description

Part of the Northeast Quarter of Section 3 in Township 1 North, Range 7 West of the Third Principal Meridian, St. Clair County, Illinois, reference being had to the plat thereof recorded in the Recorder's Office of St. Clair County, Illinois, in Book of Plats ''C'' on page 423, described as follows:

Commencing at an iron rod set at the northeast corner of the Northeast Quarter of said Section 3; thence on an assumed bearing of South 00 degrees 11 minutes 45 seconds East on the east line of said Northeast Quarter, 546.73 feet to the Point of Beginning.

From said Point of Beginning; thence continuing South 00 degrees 11 minutes 45 seconds East on said east line, 7.38 feet to the northerly right of way line of F.A.I. Route 64 as described in the Warranty Deed to the State of Illinois as recorded in Book 2012, Page 525 on May 12, 1966 in said Recorder's Office; thence North 71 degrees 54 minutes 26 seconds West on said right of way line, 352.74 feet; thence leaving said right of way line South 73 degrees 03 minutes 11 seconds East, 350.50 feet to the Point of Beginning.

Said Parcel 8311011 herein described contains 0.0284 acre or 1,236 square feet, more or less.

Parcel 8311012 Legal Description

Part of the Northwest Quarter of Section 2 in Township 1 North, Range 7 West of the Third Principal Meridian, St. Clair County, Illinois, reference being had to the plat thereof recorded in the Recorder's Office of St. Clair County, Illinois, in Book of Plats ''C'' on Page 423, described as follows:

Commencing at an iron rod set at the northwest corner of the Northwest Quarter of said Section 2; thence on an assumed bearing of South 00 degrees 11 minutes 45 seconds East on the west line of said Northwest Quarter, 546.73 feet to the Point of Beginning.

From said Point of Beginning; thence South 73 degrees 03 minutes 11 seconds East, 899.00 feet; thence South 83 degrees 58 minutes 59 seconds East, 152.57 feet to the east line of a tract of land described as Parcel 1 in the Order Confirming Title for Condemnation Case 97–ED–1 filed in the Circuit Court Twentieth Judicial Circuit of St. Clair County, Illinois, and recorded in Book 3206, Page 1206 on November 25, 1997 in the Recorder's Office of said County; thence South 00 degrees 11 minutes 45 seconds East on said east line of Parcel 1, a distance of 59.93 feet to the northerly right of way line of F.A.I. Route 64 as described in the Warranty Deed to the State of Illinois as recorded in Book 2012, Page 525 on May 12, 1966 in said Recorder's Office; thence North 71 degrees 54 minutes 26 seconds West, 1,064.51 feet to the west line of said Northwest Quarter of Section 2; thence North 00 degrees 11 minutes 45 seconds West on said west Quarter Section line, 7.38 feet to the Point of Beginning.

Said Parcel 8311012 herein described contains 0.4824 acre or 21,014 square feet, more or less.

Parcel 8311013A Legal Description

Part of Lots 1, 4 and 6 in the North One Half of Section 2 in Township 1 North, Range 7 West of the Third Principal Meridian, St. Clair County, Illinois, reference being had to the plat thereof recorded in the Recorder's Office of St. Clair County, Illinois, in Book of Plats ''A'', on Page 255, described as follows:

Commencing at an iron rod set at the northwest corner of the Northwest Quarter of said Section 2; thence on an assumed bearing of South 89 degrees 10 minutes 52 seconds East on the north line of said Northwest Quarter, 1,010.90 feet to the northwest corner of Lot 1 in the North Half of said Section 2; thence South 00 degrees 11 minutes 45 seconds East on the west line of said Lots 1 and 4, a distance of 810.33 feet to the Point of Beginning.

From said Point of Beginning; thence South 83 degrees 58 minutes 59 seconds East, 52.08 feet; thence easterly 365.39 feet on a curve to the left having a radius of 860.00 feet, a chord bearing of North 81 degrees 15 minutes 48 seconds East, 362.65 feet; thence North 62 degrees 58 minutes 46 seconds East, 213.99 feet; thence easterly 376.00 feet on a curve to the right having a radius of 630.00 feet, a chord bearing South 89 degrees 00 minutes 18 seconds East, 370.44 feet; thence South 85 degrees 49 minutes 35 seconds East, 83.14 feet; thence North 71 degrees 46 minutes 37 seconds East, 62.05 feet; thence North 23 degrees 38 minutes 28 seconds East, 351.65 feet; thence North 18 degrees 05 minutes 34 seconds East, 137.91 feet to the westerly line of a tract of land described in the Quit Claim Deed to John C. Knoebel, Jr. as recorded in Book 3100, Page 279 on June 18, 1996 in said Recorder's Office; thence South 18 degrees 47 minutes 40 seconds East on said westerly line of the Knoebel tract of land, 346.46 feet; thence South 15 degrees 13 minutes 49 seconds West, 161.01 feet; thence South 01 degree 37 minutes 34 seconds East, 74.09 feet; thence South 71 degrees 54 minutes 19 seconds East, 97.70 feet; thence easterly 259.83 feet on a curve to the right having a radius of 665.00 feet, a chord bearing South 60 degrees 42 minutes 49 seconds East, 258.18 feet to the westerly right of way line of Rieder Road (Township Road 222) and the northerly right of way line of F.A.I. Route 64 as described in the Warranty Deed to the State of Illinois as recorded in Book 2003, Page 379 on March 16, 1966 in said Recorder's Office; thence the

following six (6) courses and distances on said right of way line: (1) Thence southerly 153.16 feet on a curve to the right having a radius of 655.35 feet, a chord bearing South 27 degrees 06 minutes 11 seconds West, 152.81 feet; (2) thence South 41 degrees 09 minutes 41 seconds West, 140.15 feet; (3) thence South 46 degrees 05 minutes 34 seconds West, 185.76 feet; (4) thence North 71 degrees 54 minutes 29 seconds West, 300.10 feet; (5) thence North 77 degrees 37 minutes 04 seconds West, 351.75 feet; (6) thence North 71 degrees 54 minutes 26 seconds West, 801.34 feet to the west line of the aforesaid Lot 4; thence North 00 degrees 11 minutes 45 seconds West on said west line, 59.93 feet to the Point of Beginning.

Said Parcel 8311013A herein described contains 15.6928 acres or 683,578 square feet, more or less.

Parcel 8311013B Legal Description

Part of Lot 1 in the North One Half of Section 2 in Township 1 North, Range 7 West of the Third Principal Meridian, St. Clair County, Illinois, reference being had to the plat thereof recorded in the Recorder's Office of St. Clair County, Illinois, in Book of Plats ''A'', on Page 255, described as follows:

Commencing at an iron rod set at the northwest corner of the Northwest Quarter of said Section 2; thence on an assumed bearing of South 89 degrees 10 minutes 52 seconds East on the north line of said Northwest Quarter, 1,010.90 feet to the northwest corner of said Lot 1 in the North Half of said Section 2; thence South 00 degrees 11 minutes 45 seconds East on the west line of said Lot 1, a distance of 14.98 feet to the south right of way line of O'Fallon-Shiloh Township Road (being 50 feet wide and also known as Township Road 61A), as described in the Deed for Right-of-Way for Public Road Purposes to the Town of Shiloh Valley as recorded in Book 969, Page 214 on January 9, 1943 and as shown in Book of Plats 42, Page 89; thence South 89 degrees 10 minutes 58 seconds East on said southerly right of way line, 1,117.70 feet to the Point of Beginning.

From said Point of Beginning; thence continuing on said southerly right of way line South 89 degrees 10 minutes 58 seconds East, 124.03 to the westerly line of a tract of land described in the Quit Claim Deed to John C. Knoebel, Jr. as recorded in Book 3100, Page 279 on June 18, 1996 in said Recorder's Office; thence South 18 degrees 47 minutes 40 seconds East on the westerly line of said Knoebel tract of land, 127.62 feet; thence North 71 degrees 54 minutes 26 seconds West, 137.08 feet; thence westerly 55.95 feet on a curve to the left having a radius of 765.00 feet, a chord bearing North 74 degrees 00 minutes 09 seconds West, 55.94 feet; thence North 16 degrees 20 minutes 32 seconds East, 67.32 feet to the Point of Beginning.

Said Parcel 8311013B herein described contains 0.3166 acre or 13,791 square feet, more or less.

Except all coal within and underlying the premises together will all mining rights and other rights, privileges and immunities relating thereto.

Parcel 8311013PE Legal Description

Part of Lot 6 in the North One Half of Section 2 in Township 1 North, Range 7 West of the Third Principal Meridian, St. Clair County, Illinois, reference being had to the plat thereof recorded in the Recorder's Office of St. Clair County, Illinois, in Book of Plats ''A'', on Page 255, described as follows:

Commencing at an iron rod set at the northwest corner of the Northeast Quarter of said Section 2; thence on an assumed bearing of South 00 degrees 20 minutes 44 seconds East on the west line of said Northeast Quarter, 599.43 feet to the southerly line of a tract of land described in the Quit Claim Deed to John C. Knoebel, Jr. as recorded in Book 3100, Page 279 on June 18, 1996 in said Recorder's Office; thence North 71 degrees 10 minutes 46 seconds East on said southerly line, 89.12 feet to the Point of Beginning.

From said Point of Beginning; thence continuing North 71 degrees 10 minutes 46 seconds East, 14.58 feet to the westerly right of way line of Rieder Road (Township Road 222) and F.A.I. Route 64 as described in the Warranty Deed to the State of Illinois as recorded in Book 2003, Page 379 on March 16, 1966 in said Recorder's Office; thence southerly on said right of way line 288.29 feet on a curve to the right having a radius of 655.35 feet, a chord bearing South 03 degrees 50 minutes 40 seconds West, 285.97 feet; thence North 75 degrees 56 minutes 58 seconds West, 37.45 feet; thence North 25 degrees 16 minutes 19 seconds East, 105.29 feet; thence northerly 115.65 feet on a curve to the left, having a radius of 640.00 feet, a chord bearing North 02 degrees 04 minutes 03 seconds East, 115.49 feet; thence North 06 degrees 56 minutes 20 seconds West, 61.35 feet to the Point of Beginning.

Said Parcel 8311013PE herein described contains 0.1192 acre or 5,191 square feet, more or less.

Parcel 8311015 Legal Description

Part of Lots 7 and 8 in the North Half of Section 2 in Township 1 North, Range 7 West of the Third Principal Meridian, St. Clair County, Illinois, reference being had to the plat thereof recorded in the Recorder's Office of St. Clair County, Illinois, in Book of Plats ''A'', on Page 255, described as follows:

Commencing at an iron rod set at the southwest corner of the Northwest Quarter of said Section 2; thence on an assumed bearing of South 89 degrees 46 minutes 42 seconds East on the south line of the Northwest Quarter of said Section 2, a distance of 1,346.20 feet to the Point of Beginning.

From said Point of Beginning; thence North 00 degrees 00 minutes 04 seconds East, 115.59 feet; thence North 80 degrees 59 minutes 26 seconds East, 192.80 feet; thence northerly 194.76 feet on a curve to the right having a radius of 1,000.00 feet, a chord bearing North 12 degrees 30 minutes 48 seconds East, 194.45 feet; thence North 25 degrees 38 minutes 11 seconds East, 276.47 feet to the southeasterly right of way line of Rieder Road (also known as Township Road 222, and formerly known as Reuss Road), according to Plat Book 45, Page 38 in said Recorder's Office; thence North 49 degrees 58 minutes 00 seconds East on said southeasterly right of way line as described in the Deed for Right-of-Way for Public Road Purposes to the Town of Shiloh Valley recorded in Book 1455, Page 165 on September 11, 1956 and the Warranty Deed to the State of Illinois for Rieder Road and FAI Route 64 as recorded in Book 2058, Page 242 on April 4, 1967, a distance of 667.76 feet to the northeasterly line of Lot 8 in the North Half of said Section 2; thence South 19 degrees 53 minutes 11 seconds East on said northeasterly lot line, 375.75 feet; thence westerly 176.99 feet on a curve to the right having a radius of 600.00 feet, a chord bearing North 80 degrees 21 minutes 28 seconds West, 176.35 feet; thence North 81 degrees 58 minutes 53 seconds West, 142.90 feet; thence South 25 degrees 28 minutes 50 seconds West, 155.54 feet; thence South 18 degrees 05 minutes 34 seconds West, 339.81 feet; thence southerly 172.27 feet on a curve to the left having a radius of 715.00 feet, a chord bearing South 11 degrees 11 minutes 29 seconds West, 171.85 feet; thence South 89 degrees 56 minutes 48 seconds East, 232.54 feet; thence South 00 degrees 03 minutes 12 seconds West, 81.02 feet to the south line of the Northwest Quarter of said Section 2; thence North 89 degrees 46 minutes 42 seconds West on said south line, 702.58 feet to the Point of Beginning.

Said Parcel 8311015 herein described contains 7.2988 acres or 317,934 square feet, more or less.

Parcel 8311018A Legal Description

Part of the Lots 1 and 6 in the North One Half of Section 2 in Township 1 North, Range 7 West of the Third Principal Meridian, St. Clair County, Illinois, reference being had to the plat thereof recorded in the Recorder's Office of St. Clair County, Illinois, in Book of Plats ''A'', on Page 255, described as follows:

Commencing at an iron rod set at the northwest corner of the Northeast Quarter of said Section 2; thence on an assumed bearing of North 89 degrees 14 minutes 11 seconds West on the north line of said Northeast Quarter, 37.92 feet to the easterly right of way line of O'Fallon-Shiloh Township Road (also known as Township Road 61A), as described in the Deed for Right-of-Way for Public Road Purposes to the Town of Shiloh Valley as recorded in Book 969, Page 214 on January 9, 1943 and as shown in Book of Plats 42, Page 89 in said Recorder's Office; thence southerly on said right of way line 57.52 feet, being a curve to the left having a radius of 478.34 feet, a chord bearing of South 15 degrees 52 minutes 09 seconds East, 57.49 feet to the Point of Beginning.

From said Point of Beginning; thence South 71 degrees 54 minutes 26 seconds East, 206.42 feet; thence South 18 degrees 05 minutes 34 seconds West, 200.00 feet; thence North 71 degrees 54 minutes 26 seconds West, 35.69 feet to the existing easterly right of way of Rieder Road (formerly known as Reuss Road) as described in the Deed for Right-of-Way for Public Road Purposes to the Town of Shiloh Valley recorded in Book 969, Page 348 on April 1, 1948 and as shown in Book of Plats 45, Page 38 in said Recorder's Office; thence North 22 degrees 33 minutes 37 seconds West on said right of way line, 235.88 feet; thence continuing on said right of way line northwesterly 27.10 feet on a curve to the right having a radius of 478.34 feet, a chord bearing North 20 degrees 56 minutes 14 seconds West, 27.10 feet to the Point of Beginning.

Said Parcel 8311018A herein described contains 0.5580 acre or 24,306 square feet, more or less.

Parcel 8311018B Legal Description

Part of the Lot 6 in the North One Half of Section 2 in Township 1 North, Range 7 West of the Third Principal Meridian, St. Clair County, Illinois, reference being had to the plat thereof recorded in the Recorder's Office of St. Clair County, Illinois, in Book of Plats ''A'', on Page 255, described as follows:

Commencing at an iron rod set at the northwest corner of the Northeast Quarter of said Section 2; thence South 00 degrees 20 minutes 44 seconds East on the west line of the Northeast Quarter of said Section 2, a distance of 1,203.09 feet to the southeasterly right of way line of Rieder Road (also known as Township Road 222) and FAI Route 64 as described in the Warranty Deed to the State of Illinois as recorded in Book 2003, Page 379 on March 16, 1966 in said Recorder's Office; thence North 49 degrees 58 minutes 00 seconds East on said right of way line, 218.66 feet; thence North 61 degrees 10 minutes 50 seconds West on the right of way line, 32.64 feet to the Point of Beginning.

From said Point of Beginning; thence continuing northwesterly on said southeasterly right of way line North 61 degrees 10 minutes 27 seconds West, 63.59 feet; thence northeasterly on said right of way line 33.23 feet being a curve to the left having a radius of 726.35 feet, a chord bearing North 27 degrees 30 minutes 55 seconds East, 33.23 feet; thence South 33 degrees 52 minutes 05 seconds East, 72.42 feet to the Point of Beginning.

Said Parcel 8311018B herein described contains 0.0242 acre or 1,052 square feet, more or less.

Parcel 8311018C Legal Description

Part of the Lot 1 in the North One Half of Section 2 in Township 1 North, Range 7 West of the Third Principal Meridian, St. Clair County, Illinois, reference being had to the plat thereof recorded in the Recorder's Office of St. Clair County, Illinois, in Book of Plats ''A'', on Page 255, described as follows:

Commencing at an iron rod set at the northeast corner of the Northwest Quarter of said Section 2; thence on an assumed bearing of North 89 degrees 14 minutes 11 seconds West on the north line of said Northwest Quarter, 29.69 feet to the Point of Beginning.

From said Point of Beginning; thence South 18 degrees 05 minutes 34 seconds West, 15.32 feet to the easterly right of way line of O'Fallon-Shiloh Township Road (also known as Township Road 61A), as described in the Deed for Right-of-Way for Public Road Purposes to the Town of Shiloh Valley as recorded in Book 969, Page 214 on January 9, 1943 and as shown in Book of Plats 42, Page 89 in said Recorder's Office; thence northwesterly on said right of way line 15.08 feet on a curve to the right, having a radius of 478.34 feet, a chord bearing of South 13 degrees 19 minutes 37 seconds East, 15.08 feet to the north line of said Northwest Quarter of Section 2; thence South 89 degrees 14 minutes 11 seconds East, 8.23 feet to the Point of Beginning.

Said Parcel 8311018C herein described contains 0.0014 acre or 61 square feet, more or less.

Parcel 8311019 Legal Description

Part of the Lots 10 and 11 in the North One Half of Section 2 in Township 1 North, Range 7 West of the Third Principal Meridian, St. Clair County, Illinois, reference being had to the plat thereof recorded in the Recorder's Office of St. Clair County, Illinois, in Book of Plats ''A'', on Page 255, described as follows:

Commencing at an iron rod set at the northwest corner of the Northeast Quarter of said Section 2; thence on an assumed bearing of South 00 degrees 20 minutes 44 seconds East on the west line of the Northeast Quarter of said Section 2, a distance of 1,203.09 feet to the southeasterly right of way line of Rieder Road (also known as Township Road 222) and FAI Route 64 as described in the Warranty Deed to the State of Illinois as recorded in Book 2003, Page 379 on March 16, 1966 in said Recorder's Office and being the Point of Beginning.

From said Point of Beginning; thence North 49 degrees 58 minutes 00 seconds East on said right of way line, 203.59 feet; thence South 33 degrees 52 minutes 05 seconds East, 138.89 feet; thence South 31 degrees 40 minutes 01 second East, 155.30 feet; thence southeasterly 371.13 feet on a curve to the left having a radius of 865.00 feet, a chord bearing South 56 degrees 29 minutes 42 seconds East, 368.29 feet; thence South 68 degrees 47 minutes 11 seconds East, 645.61 feet; thence North 21 degrees 12 minutes 49 seconds East, 21.00 feet; thence South 68 degrees 47 minutes 11 seconds East, 110.00 feet; thence South 21 degrees 12 minutes 49 seconds West, 20.37 feet to the existing right of way line of FAI Route 64 as described in the Warranty Deed to the State of Illinois as recorded in Book 2058, Page 242 on April 4, 1967; thence the following three (3) courses and distances on said existing right of way line: (1) North 71 degrees 54 minutes 26 seconds West, 1,149.06 feet; (2) thence North 60 degrees 35 minutes 49 seconds West, 101.98 feet; (3) thence North 71 degrees 54 minutes 23 seconds West, 277.66 feet to the aforesaid Rieder Road right of way line; thence North 49 degrees 58 minutes 00 seconds East on said Rieder Road right of way line, 154.73 feet to the Point of Beginning.

Said Parcel 8311019 herein described contains 2.8329 acre or 123,400 square feet, more or less.

Parcel 8311020 Legal Description

Part of the Northwest Quarter of Section 2 in Township 1 North, Range 7 West of the Third Principal Meridian, St. Clair County, Illinois, reference being had to the plat thereof recorded in the Recorder's Office of St. Clair County, Illinois, in Book of Plats ''C'', on Page 423, described as follows:

Commencing at an iron rod set at the southwest corner of the Northwest Quarter of said Section 2; thence on an assumed bearing of North 00 degrees 11 minutes 45 seconds West on the west line of the Northwest Quarter of said Section 2, a distance of 1,817.20 feet to the southerly right of way line of FAI Route 64 as described in the Warranty Deed to the State of Illinois as recorded in Book 2012, Page 525 on May 12, 1966 in said Recorder's Office; thence South 71 degrees 54 minutes 26 seconds East on said right of way line, 159.90 feet to the Point of Beginning.

From said Point of Beginning; thence continuing on said southerly right of way line South 71 degrees 54 minutes 26 seconds East, 904.61 feet to the east line of Lot 5 according to the plat recorded in Book of Plats ''A'', on Page 255 in said Recorder's Office; thence South 00 degrees 11 minutes 45 seconds East on the said east line, 57.68 feet; thence northwesterly 88.25 feet on a curve to the left having a radius of 875.00 feet, a chord bearing North 65 degrees 53 minutes 49 seconds West, 88.22 feet; thence North 68 degrees 47 minutes 11 seconds West, 836.22 feet to the to the Point of Beginning.

Said Parcel 8311020 herein described contains 0.5244 acre or 22,845 square feet, more or less.

Parcel 8311021 Legal Description

Part of Lot 4 in the North One Half of Section 2 in Township 1 North, Range 7 West of the Third Principal Meridian, St. Clair County, Illinois, reference being had to the plat thereof recorded in the Recorder's Office of St. Clair County, Illinois, in Book of Plats ''A'', on Page 255, described as follows:

Commencing at an iron rod set at the southwest corner of the Northwest Quarter of said Section 2; thence on an assumed bearing of North 00 degrees 11 minutes 45 seconds West on the west line of the Northwest Quarter of said Section 2, a distance of 1,817.20 feet to the southerly right of way line of FAI Route 64 as described in the Warranty Deed to the State of Illinois as recorded in Book 2012, Page 525 on May 12, 1966 in said Recorder's Office; thence South 71 degrees 54 minutes 26 seconds East on said right of way line, 1,064.51 feet to the west line of said Lot 4 and the Point of Beginning.

From said Point of Beginning; thence continuing on said southerly right of way line as described in the Warranty Deed to the State of Illinois as recorded in Book 2003, Page 379 on March 16, 1966 in said Recorder's Office, South 71 degrees 54 minutes 26 seconds East, 17.38 feet; thence South 00 degrees 11 minutes 45 seconds East, 60.92 feet; thence northwesterly 18.65 feet on a curve to the left having a radius of 875.00 feet, a chord bearing North 62 degrees 23 minutes 48 seconds West, 18.65 feet to the west line of said Lot 4; thence North 00 degrees 11 minutes 45 seconds West, 57.68 feet to the to the Point of Beginning.

Said Parcel 8311021 herein described contains 0.0224 acre or 978 square feet, more or less.

Parcel 8311022 Legal Description

Part of Lots 4 and 6 in Section 2 in Township 1 North, Range 7 West of the Third Principal Meridian, St. Clair County, Illinois, reference being had to the plat thereof recorded in the Recorder's Office of St. Clair County, Illinois, in Book of Plats ''A'', on Page 255, described as follows:

Commencing at an iron rod set at the southeast corner of the Northwest Quarter of said Section 2; thence on an assumed bearing of North 00 degrees 20 minutes 44 seconds West on the east line of the Northwest Quarter of said Section 2, a distance of 922.39 feet to the southerly right of way line of FAI Route 64 as described in the Warranty Deed to the State of Illinois as recorded in Book 2058, Page 242 on April 4, 1967 in said Recorder's Office; thence North 83 degrees 13 minutes 02 seconds West on said right of way line, 47.36 feet; thence North 71 degrees 54 minutes 26 seconds West on said right of way line, 470.00 feet to the intersection with Rieder Road (also known as Township Road 222) as described in the Warranty Deed to the State of Illinois as recorded in Book 2003, Page 379 on March 16, 1966 in said Recorder's Office, and being the Point of Beginning.

From said Point of Beginning; thence on the northwesterly right of way line of said Rieder Road, South 42 degrees 47 minutes 21 seconds West, 275.81 feet; thence continuing on said right of way line of Rieder Road (formerly known as Reuss Road) as described in the Deed for Right-of-Way for Public Road Purposes to the Town of Shiloh Valley recorded in Book 969, Page 348 on April 1, 1948 and as shown in Book of Plats 45, Page 38 in said Recorder's Office, South 49 degrees 23 minutes 42 seconds West, 278.29 feet; thence North 18 degrees 05 minutes 34 seconds East, 117.36 feet; thence North 71 degrees 54 minutes 26 seconds West, 102.70 feet; thence westerly 372.48 feet on a curve to the right having a radius of 617.00 feet, a chord bearing North 54 degrees 36 minutes 45 seconds West, 366.85 feet; thence North 27 degrees 44 minutes 23 seconds West, 162.26 feet; thence northwesterly 373.66 feet on a curve to the left having a radius of 875.00 feet, a chord bearing North 49 degrees 33 minutes 08 seconds West, 370.83 feet to the east line of a tract of land described in the Warranty deed to Delmer Philip Scheurer and Lucille V. M. Scheurer as recorded in Book 2436, Page 1180 on January 23, 1976; thence North 00 degrees 11 minutes 45 seconds West on said Scheurer east line, 60.92 feet to the southerly right of way line of the aforesaid FAI Route 64; thence the following three (3) courses and distances on said southerly right of way line of FAI Route 64: (1) Thence South 71 degrees 54 minutes 26 seconds East, 761.25 feet; (2) thence South 57 degrees 52 minutes 15 seconds East, 206.16 feet; (3) thence South 71 degrees 54 minutes 26 seconds East, 230.01 feet to the Point of Beginning.

Said Parcel 8311022 herein described contains 7.1667 acres or 312,182 square feet, more or less.

Parcel 8311023 Legal Description

Part of Lots 10 and 11 in the North One Half of Section 2 in Township 1 North, Range 7 West of the Third Principal Meridian, St. Clair County, Illinois, reference being had to the plat thereof recorded in the Recorder's Office of St. Clair County, Illinois, in Book of Plats ''A'', on Page 255, described as follows:

Commencing at an iron rod set at the southwest corner of the Northeast Quarter of said Section 2; thence on an assumed bearing of North 89 degrees 46 minutes 42 seconds West, 60.06 feet on the south line of the Northwest Quarter of said Section 2 to the southwest corner of said Lot 10; thence North 19 degrees 53 minutes 11 seconds West on the westerly line of said Lot 10, 708.03 feet to the Point of Beginning.

From said Point of Beginning; thence continuing North 19 degrees 53 minutes 11 seconds West, 375.75 feet to the southeasterly right of way line of Rieder Road (also known as Township Road 222); thence North 49 degrees 58 minutes 00 seconds East on said Rieder Road right of way line, 35.22 feet to the southerly right of way line of FAI Route 64 as described in the Warranty Deed to the State of Illinois as recorded in Book 2058, Page 242 on April 4, 1967 in said Recorder's Office; thence the following three (3) courses and distances on said FAI Route 64 right of way line: (1)

Thence South 71 degrees 54 minutes 26 seconds East, 367.31 feet; (2) thence South 83 degrees 13 minutes 02 seconds East, 203.96 feet; (3) thence South 71 degrees 54 minutes 26 seconds East, 1,685.92 feet; thence North 73 degrees 03 minutes 11 seconds West, 1,249.41 feet; thence westerly 520.37 feet on a curve to the left, having a radius of 865.00 feet, a chord bearing South 89 degrees 42 minutes 47 seconds West, 512.56 feet; thence South 72 degrees 28 minutes 43 seconds West, 160.00 feet; thence westerly 195.96 feet on a curve to the right, having a radius of 600.00 feet, a chord bearing South 81 degrees 50 minutes 07 seconds West, 195.09 feet to the Point of Beginning.

Said Parcel 8311023 herein described contains 3.9553 acres or 172,295 square feet, more or less.

Parcel 8311024 Legal Description

Part of Lot 9 in the South One Half of Section 2 in Township 1 North, Range 7 West of the Third Principal Meridian, St. Clair County, Illinois, reference being had to the plat thereof recorded in the Recorder's Office of St. Clair County, Illinois, in Book of Plats ''A'', on Page 255, described as follows:

Commencing at an iron rod set at the northwest corner of the Southwest Quarter of said Section 2; thence on an assumed bearing of South 89 degrees 46 minutes 42 seconds East on the north line of the Southwest Quarter of said Section 2, a distance of 1,346.20 feet to the Point of Beginning.

From said Point of Beginning; thence continuing on said north line, South 89 degrees 46 minutes 42 seconds East, 702.58 feet; thence South 00 degrees 03 minutes 12 seconds West, 68.98 feet; thence South 88 degrees 58 minutes 13 seconds West, 264.54 feet; thence South 00 degrees 03 minutes 12 seconds West, 246.00 feet; thence North 89 degrees 56 minutes 48 seconds West, 200.00 feet; thence North 06 degrees 30 minutes 34 seconds West, 227.49 feet; thence North 89 degrees 56 minutes 48 seconds West, 212.00 feet; thence North 00 degrees 00 minutes 04 seconds East, 96.04 feet to the Point of Beginning.

Said Parcel 8311024 herein described contains 2.5008 acres or 108,935 square feet, more or less.

Dated: Issued in Des Plaines, Illinois on May 13, 2014.

James G. Keefer,

Manager, Chicago Airports District Office, FAA, Great Lakes Region.

[FR Doc. 2014–12676 Filed 5–30–14; 8:45 am]

BILLING CODE 4910–13–P

DEPARTMENT OF TRANSPORTATION

Federal Railroad Administration

[Docket Number FRA–2014–0045]

Notice of Application for Approval of Discontinuance or Modification of a Railroad Signal System

In accordance with Part 235 of Title 49 Code of Federal Regulations (CFR) and 49 U.S.C. 20502(a), this document provides the public notice that by a document dated April 29, 2014, the Wisconsin Central Limited (WC) petitioned the Federal Railroad Administration (FRA) seeking approval for the discontinuance or modification of a signal system. FRA assigned the petition Docket Number FRA–2014–0045.

Applicant: Wisconsin Central Limited, Mr. Thomas L. Brasseur, Manager S&C, Engineering Department, Southern Region, 1625 Depot Street, Stevens Point, WI 54481.

WC, a subsidiary of Canadian National Railway (CN), seeks approval of the proposed discontinuance and removal of a traffic control system (TCS) between Milepost (MP) 1.7, (North Collingwood) and MP 1.0 (South Collingwood) on the Missabe Subdivision, Duluth, MN. The TCS will be removed between northward approach signals A8R, A6R, and A18R and the Collingwood northward absolute signals. All TCS listed will be changed to yard limits. Control Points (CP) North Collingwood, Collingwood, and South Collingwood will be reconfigured into one, CP Collingwood, by the elimination of existing controlled switches, the installation of a new controlled switch, and the removal of controlled signals that govern movements over track with no associated switches. New TCS limits will begin and end at CP Collingwood.

The reason for the proposed changes is that the northward signals and the associated track circuits for the approach to Collingwood present a safety hazard to employees as well as the motoring public on Interstate 35 (I–35). Part of this section is located on the ore docks over I–35, which results in no place of safety in which an employee can clear the tracks due to the drop-off on each side. If an employee were to slip and fall, the fall could potentially be onto I–35. Any material or equipment accidentally dropped could fall to I–35 striking vehicular traffic.

A copy of the petition, as well as any written communications concerning the petition, is available for review online at *www.regulations.gov* and in person at the U.S. Department of Transportation's (DOT) Docket Operations Facility, 1200 New Jersey Avenue SE., W12–140, Washington, DC 20590. The Docket Operations Facility is open from 9 a.m. to 5 p.m., Monday through Friday, except Federal Holidays.

Interested parties are invited to participate in these proceedings by submitting written views, data, or comments. FRA does not anticipate scheduling a public hearing in connection with these proceedings since the facts do not appear to warrant a hearing. If any interested party desires an opportunity for oral comment, they should notify FRA, in writing, before the end of the comment period and specify the basis for their request.

All communications concerning these proceedings should identify the appropriate docket number and may be submitted by any of the following methods:

- Web site: *http://www.regulations.gov*. Follow the online instructions for submitting comments.
- Fax: 202–493–2251.
- Mail: Docket Operations Facility, U.S. Department of Transportation, 1200 New Jersey Avenue SE., W12–140, Washington, DC 20590.
- Hand Delivery: 1200 New Jersey Avenue SE., Room W12–140, Washington, DC 20590, between 9 a.m. and 5 p.m., Monday through Friday, except Federal Holidays.

Communications received by July 17, 2014 will be considered by FRA before final action is taken. Comments received after that date will be considered as far as practicable.

Anyone is able to search the electronic form of any written communications and comments received into any of our dockets by the name of the individual submitting the comment (or signing the document, if submitted on behalf of an association, business, labor union, etc.). See *http://www.regulations.gov/#!privacyNotice* for the privacy notice of regulations.gov or interested parties may review DOT's complete Privacy Act Statement in the **Federal Register** published on April 11, 2000 (65 FR 19477).

Issued in Washington, DC, on May 27, 2014.

Robert C. Lauby.

Associate Administrator for Railroad Safety, Chief Safety Officer.

[FR Doc. 2014–12625 Filed 5–30–14; 8:45 am]

BILLING CODE 4910–06–P

DEPARTMENT OF TRANSPORTATION

Federal Railroad Administration

[Docket Number FRA–2003–16666]

Petition for Special Approval of Alternate Standard

In accordance with Part 238 of Title 49 Code of Federal Regulations (CFR), this document provides the public notice that by letters dated January 30 and 31, 2014, the National Railroad Passenger Corporation (Amtrak) petitioned the Federal Railroad Administration (FRA) for an extension of its Special Approval of alternate standard for certain requirements of the Federal railroad safety regulations contained at 49 CFR Part 238, Passenger Equipment Safety Standards. FRA assigned the petition Docket Number FRA–2003–16666.

Amtrak seeks approval to continue using an alternate standard to comply with 49 CFR 238. 311, *Single car test.* This section requires single car air brake tests to be performed in accordance with either American Public Transportation Association (APTA) Standard SS–M–005–98, ''Code of Tests for Passenger Car Equipment Using Single Car Testing Device,'' published March 1998, or with an alternative procedure approved by FRA pursuant to 49 CFR 238.21, *Special approval procedure.* In 2003, Amtrak requested and received approval from FRA for an alternate standard for single car air brake tests on Talgo train sets operated by Amtrak. This approval was renewed by FRA for 5 years in 2009. Amtrak states that while Talgo brake equipment can receive the single car test using the APTA standard, the alternate standard allows a semipermanently coupled train set to remain coupled during testing. Amtrak also indicates that using the APTA standard procedure on shorter length cars combined with reduced brake pipe volume would produce air flow rates not compatible with the APTA standard.

Amtrak supplied a copy of the alternate Talgo standard, a statement affirming that Amtrak served a copy of the petition to a designated representative of its employees and the name and address of the person served as required by 49 CFR 238.21(b)(4). These documents are available for inspection in the docket for this proceeding.

A copy of the petition, as well as any written communications concerning the petition, is available for review online at *www.regulations.gov* and in person at the U.S. Department of Transportation's (DOT) Docket Operations Facility, 1200 New Jersey Avenue SE., W12–140, Washington, DC 20590. The Docket Operations Facility is open from 9 a.m. to 5 p.m., Monday through Friday, except Federal Holidays.

Interested parties are invited to participate in these proceedings by submitting written views, data, or comments. FRA does not anticipate scheduling a public hearing in connection with these proceedings since the facts do not appear to warrant a hearing. If any interested party desires an opportunity for oral comment, they should notify FRA, in writing, before the end of the comment period and specify the basis for their request.

All communications concerning these proceedings should identify the appropriate docket number and may be submitted by any of the following methods:

- Web site: *http://www.regulations.gov.* Follow the online instructions for submitting comments.
- Fax: 202–493–2251.
- Mail: Docket Operations Facility, U.S. Department of Transportation, 1200 New Jersey Avenue SE., W12–140, Washington, DC 20590.
- Hand Delivery: 1200 New Jersey Avenue SE., Room W12–140, Washington, DC 20590, between 9 a.m. and 5 p.m., Monday through Friday, except Federal Holidays.

Communications received by July 2, 2014 will be considered by FRA before final action is taken. Comments received after that date will be considered as far as practicable.

Anyone is able to search the electronic form of any written communications and comments received into any of our dockets by the name of the individual submitting the comment (or signing the document, if submitted on behalf of an association, business, labor union, etc.). See *http://www.regulations.gov/#!privacyNotice* for the privacy notice of regulations.gov or interested parties may review DOT's complete Privacy Act Statement in the **Federal Register** published on April 11, 2000 (65 FR 19477).

Issued in Washington, DC, on May 27, 2014.

Robert C. Lauby,

Associate Administrator for Railroad Safety, Chief Safety Officer.

[FR Doc. 2014–12621 Filed 5–30–14; 8:45 am]

BILLING CODE 4910–06–P

DEPARTMENT OF TRANSPORTATION

Federal Railroad Administration

[Docket Number FRA–2014–0035]

Petition for Waiver of Compliance

In accordance with Part 211 of Title 49 Code of Federal Regulations (CFR), this document provides the public notice that by a document dated March 27, 2014, and an amended May 2, 2014, General Electric Transportation (GE) petitioned the Federal Railroad Administration (FRA) for a waiver of compliance from certain provisions of the Federal railroad safety regulations contained at 49 CFR Part 229, Railroad Locomotive Safety Standards. FRA assigned the petition Docket Number FRA–2014–0035.

Specifically, GE petitioned for a waiver of compliance from requirements of 49 CFR 229.129(b)(1), which requires each locomotive manufactured after September 18, 2006 (or a sampling of such locomotives), be tested for compliance with the sound level requirements for locomotive horns given in 49 CFR 229.129(a). The required testing method is defined in 49 CFR 229.129(c), which includes the allowable ambient conditions of temperature, humidity, and wind velocity given in 49 CFR 229.129(c)(6). GE is manufacturing 78 locomotives with a new horn design that require testing. Twenty locomotives are scheduled to be completed December 31, 2014, and additional locomotives soon after. GE is requesting a waiver to delay completion of horn testing until September 30, 2015, because the weather conditions in the winter months are not expected to be in the compliant range for horn testing. The requested waiver would allow these locomotives to enter service prior to horn testing. Five prototype locomotives of the same design have already been tested and found compliant.

A copy of the petition, as well as any written communications concerning the petition, is available for review online at *www.regulations.gov* and in person at the Department of Transportation's (DOT) Docket Operations Facility, 1200 New Jersey Avenue SE., W12–140, Washington, DC 20590. The Docket Operations Facility is open from 9 a.m. to 5 p.m., Monday through Friday, except Federal Holidays.

Interested parties are invited to participate in these proceedings by submitting written views, data, or comments. FRA does not anticipate scheduling a public hearing in connection with these proceedings since the facts do not appear to warrant a

hearing. If any interested party desires an opportunity for oral comment, they should notify FRA, in writing, before the end of the comment period and specify the basis for their request.

All communications concerning these proceedings should identify the appropriate docket number and may be submitted by any of the following methods:

- Web site: *http://www.regulations.gov.* Follow the online instructions for submitting comments.
- Fax: 202–493–2251.
- Mail: Docket Operations Facility, U.S. Department of Transportation, 1200 New Jersey Avenue SE., W12–140, Washington, DC 20590.
- Hand Delivery: 1200 New Jersey Avenue SE., Room W12–140, Washington, DC 20590, between 9 a.m. and 5 p.m., Monday through Friday, except Federal Holidays.

Communications received by July 17, 2014 will be considered by FRA before final action is taken. Comments received after that date will be considered as far as practicable.

Anyone is able to search the electronic form of any written communications and comments received into any of our dockets by the name of the individual submitting the comment (or signing the document, if submitted on behalf of an association, business, labor union, etc.). See *http://www.regulations.gov/#!privacyNotice* for the privacy notice of regulations.gov or interested parties may review DOT's complete Privacy Act Statement in the **Federal Register** published on April 11, 2000 (65 FR 19477).

Issued in Washington, DC, on May 27, 2014.

Robert C. Lauby,

Associate Administrator for Railroad Safety, Chief Safety Officer.

[FR Doc. 2014–12624 Filed 5–30–14; 8:45 am]

BILLING CODE 4910–06–P

DEPARTMENT OF TRANSPORTATION

Federal Railroad Administration

[Docket Number FRA–2013–0057]

Petition for Modification to Waiver of Compliance

In accordance with Part 211 of Title 49 Code of Federal Regulations (CFR), this document provides the public notice that by two letters dated April 2, 2014, Steam Into History (Steam) has petitioned the Federal Railroad Administration (FRA) for a modification to its existing waiver of compliance from certain provisions of the Federal railroad safety regulations contained at 49 CFR Part 215, Railroad Freight Car Safety Standards. FRA assigned the petition Docket Number FRA–2013–0057.

Specifically, Steam seeks additional relief from 49 CFR 215.303, *Stenciling of restricted cars,* which requires that restricted railroad freight cars be stenciled or marked in clearly legible letters with the letter ''R'' and a series of designated terms to indicate the basis for the restricted operation of the car.

The petition requests the addition of two freight cars, numbered NCR 630 and 127, to relief already granted for similar equipment. NCR 127 is a railroad flatcar being converted to a passenger car for tourist and excursion railroad service by the addition of seating, superstructures, and steps. NCR 630 is a caboose. Each of the Steam freight cars in the petition is more than 50 years of age, measured from the date of original construction, and these freight cars are also the subject of a parallel petition for Special Approval for continued operation under 49 CFR 215.203(c). Therefore, Steam seeks a waiver of the requirement for stenciling contained in 49 CFR 215.303, as the railroad states that the stenciling would detract from both the aesthetic and historical nature of the reproduction vintage railcar equipment. As Steam's passenger equipment will operate in a limited area, Steam requests permission to keep documentation related to the restricted status of the equipment at its business office, similar to the conditions granted to other tourist and excursion railroads. Additionally, Steam petitions for relief from all of the requirements of 49 CFR Part 224, Reflectorization of Rail Freight Rolling Stock, as the railroad states that reflectorization would detract from both the aesthetic and historical nature of its reproduction vintage equipment.

A copy of the petition, as well as any written communications concerning the petition, is available for review online at *www.regulations.gov* and in person at the U.S. Department of Transportation's (DOT) Docket Operations Facility, 1200 New Jersey Avenue SE., W12–140, Washington, DC 20590. The Docket Operations Facility is open from 9 a.m. to 5 p.m., Monday through Friday, except Federal Holidays.

Interested parties are invited to participate in these proceedings by submitting written views, data, or comments. FRA does not anticipate scheduling a public hearing in connection with these proceedings since the facts do not appear to warrant a hearing. If any interested party desires an opportunity for oral comment, they should notify FRA, in writing, before the end of the comment period and specify the basis for their request.

All communications concerning these proceedings should identify the appropriate docket number and may be submitted by any of the following methods:

- Web site: *http://www.regulations.gov/* Follow the online instructions for submitting comments.
- Fax: 202–493–2251.
- Mail: Docket Operations Facility, U.S. Department of Transportation, 1200 New Jersey Avenue SE., W12–140, Washington, DC 20590.
- Hand Delivery: 1200 New Jersey Avenue SE., Room W12–140, Washington, DC 20590, between 9 a.m. and 5 p.m., Monday through Friday, except Federal Holidays.

Communications received by July 17, 2014 will be considered by FRA before final action is taken. Comments received after that date will be considered as far as practicable.

Anyone is able to search the electronic form of any written communications and comments received into any of our dockets by the name of the individual submitting the comment (or signing the document, if submitted on behalf of an association, business, labor union, etc.). See *http://www.regulations.gov/#!privacyNotice* for the privacy notice of regulations.gov or interested parties may review DOT's complete Privacy Act Statement in the **Federal Register** published on April 11, 2000 (65 FR 19477).

Issued in Washington, DC, on May 27, 2014.

Robert C. Lauby,

Associate Administrator for Railroad Safety, Chief Safety Officer.

[FR Doc. 2014–12622 Filed 5–30–14; 8:45 am]

BILLING CODE 4910–06–P

DEPARTMENT OF TRANSPORTATION

Federal Railroad Administration

[Docket Number FRA–2003–15340]

Petition for Waiver of Compliance

In accordance with Part 211 of Title 49 Code of Federal Regulations (CFR), this document provides the public notice that by a letter dated November 28, 2013, the American Association of Private Railroad Car Owners (AAPRCO) petitioned the Federal Railroad Administration (FRA) for a renewal of its waiver of compliance from certain provisions of the Federal railroad safety regulations contained at 49 CFR Part 238, Passenger Equipment Safety Standards. FRA assigned the petition Docket Number FRA–2003–15340.

AAPRCO seeks renewal of its relief from 49 CFR 238.321(m)(2), *Brake system.* This section specifies that ''up to two cars may be operated in direct release mode when the rest of the cars in the train are operated in graduated release mode, provided that the cars operated in direct release mode are hauled at the rear of the train consist.'' The present relief provides that ''up to two cars may be operated in direct release mode when the rest of the cars in the train are operated in graduated release mode,'' thereby eliminating the placement restrictions of the direct release cars to the rear of the train. AAPRCO was granted its original relief in 2003; this relief was renewed for 5 years in 2008.

A copy of the petition, as well as any written communications concerning the petition, is available for review online at *www.regulations.gov* and in person at the U.S. Department of Transportation's (DOT) Docket Operations Facility, 1200 New Jersey Avenue SE., W12–140, Washington, DC 20590. The Docket Operations Facility is open from 9 a.m. to 5 p.m., Monday through Friday, except Federal Holidays.

Interested parties are invited to participate in these proceedings by submitting written views, data, or comments. FRA does not anticipate scheduling a public hearing in connection with these proceedings since the facts do not appear to warrant a hearing. If any interested party desires an opportunity for oral comment, they should notify FRA, in writing, before the end of the comment period and specify the basis for their request.

All communications concerning these proceedings should identify the appropriate docket number and may be submitted by any of the following methods:

- Web site: *http://www.regulations.gov.* Follow the online instructions for submitting comments.
- Fax: 202–493–2251.
- Mail: Docket Operations Facility, U.S. Department of Transportation, 1200 New Jersey Avenue SE., W12–140, Washington, DC 20590.
- Hand Delivery: 1200 New Jersey Avenue SE., Room W12–140, Washington, DC 20590, between 9 a.m. and 5 p.m., Monday through Friday, except Federal Holidays.

Communications received by July 17, 2014 will be considered by FRA before final action is taken. Comments received after that date will be considered as far as practicable.

Anyone is able to search the electronic form of any written communications and comments received into any of our dockets by the name of the individual submitting the comment (or signing the document, if submitted on behalf of an association, business, labor union, etc.). See *http://www.regulations.gov/#!privacyNotice* for the privacy notice of regulations.gov or interested parties may review DOT's complete Privacy Act Statement in the **Federal Register** published on April 11, 2000 (65 FR 19477).

Issued in Washington, DC, on May 27, 2014.

Robert C. Lauby,

Associate Administrator for Railroad Safety, Chief Safety Officer.

[FR Doc. 2014–12620 Filed 5–30–14; 8:45 am]

BILLING CODE 4910–06–P

DEPARTMENT OF TRANSPORTATION

Federal Railroad Administration

[Docket Number FRA–2014–0013]

Petition for Waiver of Compliance

In accordance with Part 211 of Title 49 Code of Federal Regulations (CFR), this document provides the public notice that by a document dated June 6, 2013, Montana Rail Link (MRL) petitioned the Federal Railroad Administration (FRA) for a waiver of compliance from certain provisions of the Federal railroad safety regulations contained at 49 CFR Part 232, Brake System Safety Standards for Freight and Other Non-Passenger Trains and Equipment; End-of-Train Devices. FRA assigned the petition Docket Number FRA–2014–0013.

MRL seeks a waiver of compliance from 49 CFR 232.219, *Double heading and helper service.* This section states that ''a Class III brake test pursuant to [Section] 232.211 shall be made to ensure that the brakes are operative from the automatic brake valve of the locomotive taking control of the train.'' MRL petitions FRA for a modified Class 3 brake test for the use of the Helper-Link® equipped helper locomotive when pushing trains with one or more distributed power (DP) locomotives on the rear of the train. Most of MRL's traffic is bridge traffic for BNSF Railway (BNSF), which uses a waiver for Helper-Link® (Docket Number FRA–2006–26435). MRL seeks the use of identical conditions to BNSF's relief for its operation of Helper-Link®-equipped trains. MRL's evaluation of benefits includes increased safety due to the reduced need for train service employees to couple and uncouple from trains twice for each train assisted and operational benefits by reducing turnaround time for helper consists, improving velocity and increasing fuel savings.

A copy of the petition, as well as any written communications concerning the petition, is available for review online at *www.regulations.gov* and in person at the U.S. Department of Transportation's (DOT) Docket Operations Facility, 1200 New Jersey Avenue SE., W12–140, Washington, DC 20590. The Docket Operations Facility is open from 9 a.m. to 5 p.m., Monday through Friday, except Federal Holidays.

Interested parties are invited to participate in these proceedings by submitting written views, data, or comments. FRA does not anticipate scheduling a public hearing in connection with these proceedings since the facts do not appear to warrant a hearing. If any interested party desires an opportunity for oral comment, they should notify FRA, in writing, before the end of the comment period and specify the basis for their request.

All communications concerning these proceedings should identify the appropriate docket number and may be submitted by any of the following methods:

- Web site: *http://www.regulations.gov.* Follow the online instructions for submitting comments.
- Fax: 202–493–2251.
- Mail: Docket Operations Facility, U.S. Department of Transportation, 1200 New Jersey Avenue SE., W12–140, Washington, DC 20590.
- Hand Delivery: 1200 New Jersey Avenue SE., Room W12–140, Washington, DC 20590, between 9 a.m. and 5 p.m., Monday through Friday, except Federal Holidays.

Communications received by July 17, 2014 will be considered by FRA before final action is taken. Comments received after that date will be considered as far as practicable.

Anyone is able to search the electronic form of any written communications and comments received into any of our dockets by the name of the individual submitting the comment (or signing the document, if submitted on behalf of an association, business, labor union, etc.). See *http://www.regulations.gov/#!privacyNotice* for the privacy notice of regulations.gov or interested parties may review DOT's complete Privacy Act Statement in the **Federal Register** published on April 11, 2000 (65 FR 19477).

Issued in Washington, DC, on May 27, 2014.

Robert C. Lauby,

Associate Administrator for Railroad Safety, Chief Safety Officer.

[FR Doc. 2014–12623 Filed 5–30–14; 8:45 am]

BILLING CODE 4910–06–P

DEPARTMENT OF TRANSPORTATION

Maritime Administration

Marine Highway Projects Open Season

AGENCY: Maritime Administration, Department of Transportation.

ACTION: Notice of Open Season for Marine Highway Projects.

SUMMARY: The U.S. Department of Transportation (DOT) and Maritime Administration (MARAD) announce that the open season for Marine Highway project submissions begins today and ends on September 30, 2016. The purpose of this notice is to invite interested parties to submit Marine Highway project applications to DOT for review and consideration. Marine Highway route recommendations will continue to be accepted and reviewed at any time.

Since the last open season, the program's originating authority, the Energy Independence and Security Act of 2007, has been amended to include short sea routes that do not have parallel landside routes. Accordingly, the Department can now review and consider designating Marine Highway routes and projects between all U.S. ports, including U.S. ports with no contiguous landside connection, as well as between U.S. ports and ports in Canada located in the Great Lakes Saint Lawrence Seaway System.

DATES: There will be five project review sessions during the Marine Highway Project Open Season, and route designation recommendations will continue to be accepted and reviewed at any time. Table 1 contains the project application due dates and review periods for each review session. Qualified projects will be announced shortly after the completion of each project review session.

TABLE 1—OPEN SEASON PROJECT SUBMISSION AND REVIEW TIMELINE

Review session	Project application due date (11:59 p.m. Pacific)	Project review period
1	June 30, 2014	July 1, 2014–September 30, 2014.
2	December 31, 2014	January 1, 2015–March 31, 2015.
3	June 30, 2015	July 1, 2015–September 30, 2015.
4	December 31, 2015	January 1, 2016–March 31, 2016.
5	June 30, 2016	July 1, 2016–September 30, 2016.

Key Instructions/Information: The Marine Highway project application process is detailed in 46 CFR 393.4 *Marine Highway Projects,* which is accessible online at *https://www.federalregister.gov/articles/2010/04/09/2010-7899/americas-marine-highway-program.* MARAD's Gateway Offices can respond to questions about the Marine Highway Program, Route designations, and Project Open Season, and their contact information is available on the MARAD Web site at the following URL: *http://www.marad.dot.gov/about_us_landing_page/gateway_offices/Gateway_Presence.htm.*

ADDRESSES: Submit applications to Stephen Shafer, Office of Intermodal System Development, W21–315, U.S. Department of Transportation, Maritime Administration, 1200 New Jersey Avenue SE., Washington, DC 20590 or via email to *mh@dot.gov.* Telephone (202) 366–5468; Fax (202) 366–5904.

FOR FURTHER INFORMATION CONTACT: Stephen Shafer, Office of Intermodal System Development, W21–315, U.S. Department of Transportation, Maritime Administration, 1200 New Jersey Avenue SE., Washington, DC 20590. Telephone (202) 366–5468; Fax (202) 366–5904 or email Mr. Shafer at *mh@dot.gov.* You may also visit MARAD's Marine Highway Web page at *http://www.marad.dot.gov/ships_shipping_landing_page/mhi_home/mhi_home.htm* and click on ''Final Rule in the **Federal Register**'' for special instructions.

SUPPLEMENTARY INFORMATION: Since the last call for Marine Highway projects on April 15, 2010, the scope of the Marine Highway Program has been expanded to include all of the United States domestic marine transportation system. Previously, the Program only included waterways that paralleled landside transportation routes, and thus, excluded routes between the mainland and non-contiguous ports. The expanded scope comes from Section 405 of The Coast Guard and Marine Transportation Act of 2012 (Pub. L. 112–213), which reads: ''[t]he Secretary shall designate short sea transportation routes as extensions of the surface transportation system to focus public and private efforts to use the waterways to relieve landside congestion along coastal corridors or to promote short sea transportation.''

The purpose of the open season call for projects is to seek eligible Marine Highway projects that may establish new or enhance existing Marine Highway services. Eligible projects may be designated as Marine Highway Projects by the Secretary of Transportation. Being designated a Marine Highway Project allows Department of Transportation resources to be used to assist public project sponsors, ports, and other local transportation or economic development agencies in the development of Marine Highway projects.

The Department's objective through this program is to reduce landside congestion and increase the use of domestic marine transportation by supporting the development of transportation options for shippers. These services provide economic and environmental benefits to the U.S. public at large. Marine Highway Program designated projects can improve safety and system resilience, and serve to reduce transportation-related air emissions, transportation costs for shippers, energy consumption, and costs associated with landside transportation infrastructure.

The Marine Highway Program implementing regulations at 46 CFR Part 393 will be amended to reflect the new statutory changes. In the meantime, the Department of Transportation will accept and process project applications that propose to operate or expand service on Marine Highway routes, including those with no parallel landside route.

Exceptions to This Open Season

If new Marine Highway grant funds are appropriated in a fiscal year, it is possible that the review period for the July 1–September 30 review session may be truncated so that projects submitted on June 30 could be made eligible to apply for those Marine Highway grant funds.

Participation

Although Marine Highway Projects often involve private entities such as

vessel operators, the applications must be sponsored and submitted to the Department of Transportation by a public entity, such as a State Department of Transportation, Metropolitan Planning Organization (MPO), or Port Authority. Public/private partnerships are encouraged.

To be eligible for Marine Highway Project status, the proposed project must (1) use U.S. documented vessels, (2) transport passengers, containerized freight, or trailer-based freight, and (3) operate on a designated Marine Highway Route. (Please see 46 CFR 393.4(c) for a comprehensive description of project eligibility). However, because the number of navigable waterways eligible for designation as a Marine Highway Route was increased in the Coast Guard and Marine Transportation Act of 2012, the Department will consider Marine Highway projects that would operate on newly eligible navigable waterways that have been recommended for, but not yet granted, a Marine Highway Route designation. For further information on recommending that a navigable waterway be designated as a Marine Highway Route, please contact your regional Gateway Office. Their contact information is available on MARAD's Web site at *http://www.marad.dot.gov/about_us_landing_page/gateway_offices/Gateway_Presence.htm.*

Authority: 49 CFR 1.92 and 1.93.

* * * * *

Dated: May 27, 2014.

By Order of the Maritime Administrator.

Thomas M. Hudson,

Secretary, Maritime Administration.

[FR Doc. 2014–12602 Filed 5–30–14; 8:45 am]

BILLING CODE 4910–81–P

DEPARTMENT OF TRANSPORTATION

Pipeline and Hazardous Materials Safety Administration

Office of Hazardous Materials Safety; List of Applications Delayed More Than 180 Days

AGENCY: Pipeline and Hazardous Materials Safety Administration (PHMSA), DOT.

ACTION: List of applications delayed more than 180 days.

SUMMARY: In accordance with the requirements of 49 U.S.C. 5117(c), PHMSA is publishing the following list of special permit applications that have been in process for 180 days or more. The reason(s) for delay and the expected completion date for action on each application is provided in association with each identified application.

FOR FURTHER INFORMATION CONTACT: Ryan Paquet, Director, Office of Hazardous Materials Special Permits and Approvals, Pipeline and Hazardous Materials Safety Administration, U.S. Department of Transportation, East Building, PHH–30, 1200 New Jersey Avenue Southeast, Washington, DC 20590–0001, (202) 366–4535

Key to "Reason for Delay"

1. Awaiting additional information from applicant
2. Extensive public comment under review
3. Application is technically complex and is of significant impact or precedent-setting and requires extensive analysis
4. Staff review delayed by other priority issues or volume of special permit applications

Meaning of Application Number Suffixes

N—New Application
M—Modification Request
R—Renewal Request
P—Party To Exemption Request

Issued in Washington, DC, on May 13, 2014.

Donald Burger,

Chief, General Approvals and Permits.

MODIFICATION TO SPECIAL PERMITS

Application No.	Applicant	Reason for delay	Estimated date of completion
15854–M	Colmac Coil Manufacturing, Inc., Colville, WA	4	05–31–2014
11373–M	Marlin Company, Inc., Lenoir, NC	4	05–31–2014
15642–M	Praxair Distribution, Inc., Danbury, CT	4	05–31–2014
14313–M	Airgas USA, LLC., Tulsa, OK	4	06–30–2014
9610–M	ATK Small Caliber Systems, Independence, MO	4	05–31–2014
12629–M	TEA Technologies, Inc., Amarillo, TX	4	06–30–2014
12184–M	Weldship Corporation, Bethlehem, PA	4	05–31–2014
New Special Permit Applications			
15767–N	Union Pacific Railroad Company, Omaha, NE	1	05–31–2014
15973–N	Codman & Shurtleff, Inc., Raynham, MA	4	07–31–2014
15955–N	Thompson Tank, Inc., Lakewood, CA	4	05–31–2014
15991–N	Dockweiler, Neustadt-Glewe, Germany	4	07–31–2014
16077–N	Americase, Waxahache, TX	4	06–30–2014
15999–N	National Aeronautics and Space Administration (NASA), Washington, DC.	4	07–31–2014
16001–N	VELTEK, Malvern, PA	4	07–31–2014
16120–N	Pacific Helicopter Tours, Inc., Kahului, HI	4	05–31–2014
Renewal Special Permits Applications			
14267–R	LATA Environmental Services of Kentucky, LLC (LATA Kentucky), Kevil, KY.	3	05–31–2014
14566–R	Nantong CIMC Tank Equipment Co. Ltd., Nantong, Jiangsu Province.	4	05–31–2014
13083–R	Rockwood Pigments NA, Inc., St. Louis, MO	4	07–31–2014
11602–R	East Tennessee Iron & Metal, Inc., Rogersville, TN	4	06–30–2014

[FR Doc. 2014–12439 Filed 5–30–14; 8:45 am]
BILLING CODE 4910–60–M

DEPARTMENT OF TRANSPORTATION

Pipeline and Hazardous Materials Safety Administration

Office of Hazardous Materials Safety; Notice of Applications for Modification of Special Permit

AGENCY: Pipeline and Hazardous Materials Safety Administration (PHMSA), DOT.

ACTION: List of Applications for Modification of Special Permits.

SUMMARY: In accordance with the procedures governing the application for, and the processing of, special permits from the Department of Transportation's Hazardous Material Regulations (49 CFR Part 107, Subpart B), notice is hereby, given that the Office of Hazardous Materials Safety has received the applications described herein. This notice is abbreviated to expedite docketing and public notice. Because the sections affected, modes of transportation, and the nature of application have been shown in earlier **Federal Register** publications, they are not repeated here. Requests for modification of special permits (e.g. to provide for additional hazardous materials, packaging design changes, additional mode of transportation, etc) are described in footnotes to the application number. Application numbers with the suffix ''M'' denote a modification request. These applications have been separated from the new application for special permits to facilitate processing.

DATES: Comments must be received on or before June 17, 2014.

ADDRESS COMMENTS TO: Record Center, Pipeline and Hazardous Materials Safety Administration, U.S. Department of Transportation, Washington, DC 20590.

Comments should refer to the application number and be submitted in triplicate. If confirmation of receipt of comments is desired, include a self-addressed stamped postcard showing the special permit number.

FOR FURTHER INFORMATION CONTACT: Copies of the applications are available for inspection in the Records Center, East Building, PHH–30, 1200 New Jersey Avenue Southeast, Washington DC or at *http://regulations.gov*.

This notice of receipt of applications for modification of special permit is published in accordance with Part 107 of the Federal hazardous materials transportation law (49 U.S.C. 5117(b); 49 CFR 1.53(b)).

Issued in Washington, DC, on May 15, 2014.

Donald Burger,

Chief, General Approvals and Permits.

MODIFICATION SPECIAL PERMITS

Application No.	Docket No.	Applicant	Regulation(s) affected	Name of special permit thereof
13173–M	.....	Luxfer Canada Ltd. Calgary, AB.	49 CFR 172.101 Column (9B), and 173.302a(a)(1).	To modify the special permit to authorize additional cylinder design part numbers.

[FR Doc. 2014–12436 Filed 5–30–14; 8:45 am]
BILLING CODE 4909–60–P

DEPARTMENT OF THE TREASURY

Office of the Comptroller of the Currency

[Docket ID: OCC–2014–0013]

Mutual Savings Association Advisory Committee Minority Depository Institutions Advisory Committee

AGENCY: Office of the Comptroller of the Currency, Department of the Treasury.

ACTION: Request for nominations.

SUMMARY: The Office of the Comptroller of the Currency (OCC) is seeking nominations of members for the Mutual Savings Association Advisory Committee (MSAAC) and the Minority Depository Institutions Advisory Committee (MDIAC). The MSAAC and the MDIAC assist the OCC in assessing the needs and challenges facing mutual savings associations and minority depository institutions, respectively. The OCC is seeking nominations of individuals who are officers and/or directors of federal mutual savings associations, or officers/and or directors of federal stock savings associations that are part of a mutual holding company structure, to be considered for selection as MSAAC members. The OCC is also seeking nominations of individuals who are officers and/or directors of OCC-regulated minority depository institutions, or officers and/or directors of other depository institutions with a commitment to supporting minority depository institutions, to be considered for selection as MDIAC members.

DATES: Nominations must be received on or before July 15, 2014.

ADDRESSES: Nominations of MSAAC members should be sent to *msaac.nominations@occ.treas.gov* or mailed to: Donna Deale, Deputy Comptroller for Thrift Supervision, 400 7th Street SW., Washington, DC 20219. Nominations of MDIAC members should be sent to *mdiac.nominations@occ.treas.gov* or mailed to: Beverly Cole, Senior Advisor to the Senior Deputy Comptroller for Midsize and Community Bank Supervision, 400 7th Street SW., Washington, DC 20219.

FOR FURTHER INFORMATION CONTACT: Kristin Merritt, Special Counsel, Administrative & Internal Law, (202) 649–5585, Office of the Comptroller of the Currency, 400 7th Street SW., Washington, DC 20219.

SUPPLEMENTARY INFORMATION: The MSAAC and the MDIAC will be administered in accordance with the Federal Advisory Committee Act, 5 U.S.C. App. 1, section 9(c).

The MSAAC will advise the OCC on ways to meet the goals established by section 5(a) of the Home Owners' Loan Act, 12 U.S.C. 1464. The Committee will advise the OCC with regard to mutual associations on means to: (1) Provide for the organization, incorporation, examination, operation and regulation of associations to be known as federal savings associations (including federal savings banks); and (2) issue charters therefore, giving primary consideration of the best practices of thrift institutions in the United States. The MSAAC will help meet those goals by providing OCC with informed advice and recommendations regarding the current and future circumstances and needs of mutual savings associations.

The MDIAC will advise the OCC on ways to meet the goals established by section 308 of the Financial Institutions Reform, Recovery, and Enforcement Act of 1989, Public Law 101–73, Title III, 103 Stat. 353, 12 U.S.C. 1463 note. The goals of section 308 are to preserve the present number of minority institutions, preserve the minority character of minority-owned institutions in cases

involving mergers or acquisitions, provide technical assistance, and encourage the creation of new minority institutions. The MDIAC will help OCC meet those goals by providing informed advice and recommendations regarding a range of issues involving minority depository institutions.

Nominations should describe and document the proposed member's qualifications for MSAAC or MDIAC membership, as appropriate. Existing MSAAC or MDIAC members may reapply themselves or may be re-nominated. The OCC will use this nomination process to achieve a balanced membership and ensure that diverse views are represented among the membership of officers and directors of mutual and minority institutions. The MSAAC and MDIAC members will not be compensated for their time, but will be eligible for reimbursement of travel expenses in accordance with applicable federal law and regulations.

Dated: May 23, 2014.

By the Office of the Comptroller of the Currency.

Thomas J. Curry,

Comptroller of the Currency.

[FR Doc. 2014–12596 Filed 5–30–14; 8:45 am]

BILLING CODE 4810–33–P

DEPARTMENT OF THE TREASURY

Internal Revenue Service

Proposed Collection; Comment Request for Regulation Project

AGENCY: Internal Revenue Service (IRS), Treasury.

ACTION: Notice and request for comments.

SUMMARY: The Department of the Treasury, as part of its continuing effort to reduce paperwork and respondent burden, invites the general public and other Federal agencies to take this opportunity to comment on proposed and/or continuing information collections, as required by the Paperwork Reduction Act of 1995, Public Law 104–13 (44 U.S.C. 3506(c)(2)(A)). Currently, the IRS is soliciting comments product liability losses and accumulations for product liability losses (Section 1.172–13).

DATES: Written comments should be received on or before August 1, 2014 to be assured of consideration.

ADDRESSES: Direct all written comments to Christie Preston, Internal Revenue Service, Room 6129, 1111 Constitution Avenue NW., Washington, DC 20224.

FOR FURTHER INFORMATION CONTACT: Requests for additional information or copies of the regulations should be directed to Allan Hopkins, at Internal Revenue Service, room 6129, 1111 Constitution Avenue NW., Washington, DC 20224, or through the internet at *Allan.M.hopkins@irs.gov.*

SUPPLEMENTARY INFORMATION:

Title: Product Liability Losses and Accumulations for Product Liability Losses.

OMB Number: 1545–0863. Regulation Project Number: LR–218–78 (TD 8096).

Abstract: This document provides final regulation relating to product liability losses and accumulations for the payment of reasonable anticipated product liability losses. Changes to the applicable tax law were made by the Revenue Act of 1978. The regulations would provide the public with guidance needed lo comply with the applicable parts of act.

Current Actions: There is no change to this existing regulation.

Type of Review: Extension of currently approved collection.

Affected Public: Business or other for-profit organizations.

Estimated Number of Respondents: 5,000.

Estimated Average Time per Respondent: 30 minutes.

Estimated Total Annual Burden Hours: 2,500.

The following paragraph applies to all the collections of information covered by this notice.

The following paragraph applies to all of the collections of information covered by this notice:

An agency may not conduct or sponsor, and a person is not required to respond to, a collection of information unless the collection of information displays a valid OMB control number.

Books or records relating to a collection of information must be retained as long as their contents may become material in the administration of any internal revenue law. Generally, tax returns and tax return information are confidential, as required by 26 U.S.C. 6103.

Request for Comments: Comments submitted in response to this notice will be summarized and/or included in the request for OMB approval. All comments will become a matter of public record. Comments are invited on: (a) Whether the collection of information is necessary for the proper performance of the functions of the agency, including whether the information shall have practical utility; (b) the accuracy of the agency's estimate of the burden of the collection of information; (c) ways to enhance the quality, utility, and clarity of the information to be collected; (d) ways to minimize the burden of the collection of information on respondents, including through the use of automated collection techniques or other forms of information technology; and (e) estimates of capital or start-up costs and costs of operation, maintenance, and purchase of services to provide information.

Approved: May 5, 2014.

Christie Preston,

IRS Reports Clearance Officer.

[FR Doc. 2014–12628 Filed 5–30–14; 8:45 am]

BILLING CODE 4830–01–P

DEPARTMENT OF THE TREASURY

Internal Revenue Service

Proposed Collection; Comment Request for Form 1120–PC

AGENCY: Internal Revenue Service (IRS), Treasury.

ACTION: Notice and request for comments.

SUMMARY: The Department of the Treasury, as part of its continuing effort to reduce paperwork and respondent burden, invites the general public and other Federal agencies to take this opportunity to comment on proposed and/or continuing information collections, as required by the Paperwork Reduction Act of 1995, Public Law 104–13 (44 U.S.C. 3506(c)(2)(A)). Currently, the IRS is soliciting comments concerning Form 1120–PC, U.S. Property and Casualty Insurance Company Income Tax Return.

DATES: Written comments should be received on or before August 1, 2014 to be assured of consideration.

ADDRESSES: Direct all written comments to Christie Preston, Internal Revenue Service, room 6129, 1111 Constitution Avenue NW., Washington, DC 20224.

FOR FURTHER INFORMATION CONTACT: Requests for additional information or copies of the form and instructions should be directed to Allan Hopkins, at Internal Revenue Service, room 6231, 1111 Constitution Avenue NW., Washington, DC 20224, or through the internet, at *Allan.M.Hopkins@irs.gov.*

SUPPLEMENTARY INFORMATION:

Title: U.S. Property and Casualty Insurance Company Income Tax Return.

OMB Number: 1545–1027.

Form Number: Form 1120–PC.

Abstract: Property and casualty insurance companies are required to file an annual return of income and pay the tax due. The data is used to insure that companies have correctly reported income and paid the correct tax.

Current Actions: There are no changes being made to the form at this time.

Type of Review: Extension of a currently approved collection.

Affected Public: Business or other for-profit organizations.

Estimated Number of Respondents: 4,200.

Estimated Time per Respondent: 180 hrs., 4 min.

Estimated Total Annual Burden Hours: 672,246.

The following paragraph applies to all of the collections of information covered by this notice:

An agency may not conduct or sponsor, and a person is not required to respond to, a collection of information unless the collection of information displays a valid OMB control number. Books or records relating to a collection of information must be retained as long as their contents may become material in the administration of any internal revenue law. Generally, tax returns and tax return information are confidential, as required by 26 U.S.C. 6103.

Request for Comments: Comments submitted in response to this notice will be summarized and/or included in the request for OMB approval. All comments will become a matter of public record. Comments are invited on: (a) Whether the collection of information is necessary for the proper performance of the functions of the agency, including whether the information shall have practical utility; (b) the accuracy of the agency's estimate of the burden of the collection of information; (c) ways to enhance the quality, utility, and clarity of the information to be collected; (d) ways to minimize the burden of the collection of information on respondents, including through the use of automated collection techniques or other forms of information technology; and (e) estimates of capital or start-up costs and costs of operation, maintenance, and purchase of services to provide information.

Approved: May 6, 2014.

Christie Preston,

IRS Reports Clearance Officer.

[FR Doc. 2014–12630 Filed 5–30–14; 8:45 am]

BILLING CODE 4830–01–P

DEPARTMENT OF THE TREASURY

Internal Revenue Service

Proposed Collection; Comment Request for Form 8848

AGENCY: Internal Revenue Service (IRS), Treasury.

ACTION: Notice and request for comments.

SUMMARY: The Department of the Treasury, as part of its continuing effort to reduce paperwork and respondent burden, invites the general public and other Federal agencies to take this opportunity to comment on proposed and/or continuing information collections, as required by the Paperwork Reduction Act of 1995, Public Law 104–13 (44 U.S.C. 3506(c)(2)(A)). Currently, the IRS is soliciting comments concerning Form 8848, Consent to Extend the Time To Assess the Branch Profits Tax Under Regulations Sections 1.884–2(a) and (c).

DATES: Written comments should be received on or before August 1, 2014 to be assured of consideration.

ADDRESSES: Direct all written comments to Christie Preston, Internal Revenue Service, Room 6129, 1111 Constitution Avenue NW., Washington, DC 20224.

FOR FURTHER INFORMATION CONTACT: Requests for additional information or copies of the form and instructions should be directed to Allan Hopkins, or at Internal Revenue Service, Room 6129, 1111 Constitution Avenue NW., Washington, DC 20224, or through the internet, at *Allan.M.HopkinsAirs.gov*.

SUPPLEMENTARY INFORMATION: *Title:* Consent To Extend the Time To Assess the Branch Profits Tax Under Regulations Sections 1.884–2(a) and (c).

OMB Number: 1545–1407.

Form Number: 8848.

Abstract: Form 8848 is used by foreign corporations that have (a) completely terminated all of their U.S. trade or business within the meaning of temporary regulations sections 1.884–2T(a) during the tax year or (b) transferred their U.S. assets to a domestic corporation in a transaction described in Code section 381(a), if the foreign corporation was engaged in a U.S. trade or business at that time.

Current Actions: There are no changes being made to the form at this time.

Type of Review: Extension of a currently approved collection.

Affected Public: Business or other for-profit organizations.

Estimated Number of Respondents: 5,000.

Estimated Time per Respondent: 5 hours, 46 minute.

Estimated Total Annual Burden Hours: 22,500.

The following paragraph applies to all of the collections of information covered by this notice:

An agency may not conduct or sponsor, and a person is not required to respond to, a collection of information unless the collection of information displays a valid OMB control number.

Books or records relating to a collection of information must be retained as long as their contents may become material in the administration of any internal revenue law. Generally, tax returns and tax return information are confidential, as required by 26 U.S.C. 6103.

Request for Comments: Comments submitted in response to this notice will be summarized and/or included in the request for OMB approval. All comments will become a matter of public record. Comments are invited on: (a) Whether the collection of information is necessary for the proper performance of the functions of the agency, including whether the information shall have practical utility; (b) the accuracy of the agency's estimate of the burden of the collection of information; (c) ways to enhance the quality, utility, and clarity of the information to be collected; (d) ways to minimize the burden of the collection of information on respondents, including through the use of automated collection techniques or other forms of information technology; and (e) estimates of capital or start-up costs and costs of operation, maintenance, and purchase of services to provide information.

Approved: May 5, 2014.

Christie Preston,

IRS Reports Clearance Officer.

[FR Doc. 2014–12631 Filed 5–30–14; 8:45 am]

BILLING CODE 4830–01–P

U.S.-CHINA ECONOMIC AND SECURITY REVIEW COMMISSION

Notice of Open Public Hearing

AGENCY: U.S.-China Economic and Security Review Commission.

ACTION: Notice of open public hearing—June 5, 2014, Washington, DC.

SUMMARY: Notice is hereby given of the following hearing of the U.S.-China Economic and Security Review Commission.

Name: Dennis C. Shea, Chairman of the U.S.-China Economic and Security Review Commission. The Commission is mandated by Congress to investigate, assess, and report to Congress annually on ''the national security implications of the economic relationship between the United States and the People's Republic of China.'' Pursuant to this mandate, the Commission will hold a public hearing in Washington, DC on June 05, 2014, ''Recent Developments in China's Relations with Taiwan and North Korea.''

Background: This is the seventh public hearing the Commission will hold during its 2014 report cycle to

collect input from academic, industry, and government experts on national security implications of the U.S. bilateral trade and economic relationship with China. The hearing will examine economic, political, and security developments in cross-Strait and China-North Korea relations. It will assess the opportunities and risks arising from closer cross-Strait economic integration for Taiwan and the United States, and it will examine Taiwan's ability to defend against military coercion by China. The hearing will also address whether China's views and policies toward North Korea have changed in recent years and the implications for U.S. security interests. The hearing will be co-chaired by Commissioners Daniel M. Slane and Katherine C. Tobin, Ph.D.. Any interested party may file a written statement by June 05, 2014, by mailing to the contact below. A portion of each panel will include a question and answer period between the Commissioners and the witnesses.

Location, Date and Time: Room 608, Dirksen Senate Office Building, 1st Street Southeast, Washington, DC. Thursday, June 05, 2014, 8:30 a.m.–2:15 p.m. Eastern Time. A detailed agenda for the hearing will be posted to the Commission's Web site at *www.uscc.gov.* Also, please check our Web site for possible changes to the hearing schedule. Reservations are not required to attend the hearing.

FOR FURTHER INFORMATION CONTACT: Any member of the public seeking further information concerning the hearing should contact Reed Eckhold, 444 North Capitol Street NW., Suite 602, Washington DC 20001; phone: 202–624–1496, or via email at *reckhold@uscc.gov*. Reservations are not required to attend the hearing.

Authority: Congress created the U.S.-China Economic and Security Review Commission in 2000 in the National Defense Authorization Act (Pub. L. 106–398), as amended by Division P of the Consolidated Appropriations Resolution, 2003 (Pub. L. 108–7), as amended by Public Law 109–108 (November 22, 2005).

Dated: May 28, 2014.

Michael Danis,

Executive Director, U.S.-China Economic and Security Review Commission.

[FR Doc. 2014–12746 Filed 5–30–14; 8:45 am]

BILLING CODE 1137–00–P

UNITED STATES SENTENCING COMMISSION

Proposed Priorities for Amendment Cycle

AGENCY: United States Sentencing Commission.

ACTION: Notice; Request for public comment.

SUMMARY: As part of its statutory authority and responsibility to analyze sentencing issues, including operation of the federal sentencing guidelines, and in accordance with Rule 5.2 of its Rules of Practice and Procedure, the United States Sentencing Commission is seeking comment on possible priority policy issues for the amendment cycle ending May 1, 2015.

DATES: Public comment should be received on or before July 29, 2014.

ADDRESSES: Comments should be sent to the Commission by electronic mail or regular mail. The email address is *pubaffairs@ussc.gov.* The regular mail address is United States Sentencing Commission, One Columbus Circle NE., Suite 2–500, South Lobby, Washington, DC 20002–8002, Attention: Public Affairs—Priorities Comment.

FOR FURTHER INFORMATION CONTACT: Jeanne Doherty, Public Affairs Officer, 202–502–4502, *jdoherty@ussc.gov.*

SUPPLEMENTARY INFORMATION: The United States Sentencing Commission is an independent agency in the judicial branch of the United States Government. The Commission promulgates sentencing guidelines and policy statements for federal sentencing courts pursuant to 28 U.S.C. 994(a). The Commission also periodically reviews and revises previously promulgated guidelines pursuant to 28 U.S.C. 994(o) and submits guideline amendments to the Congress not later than the first day of May each year pursuant to 28 U.S.C. 994(p).

Pursuant to 28 U.S.C. 994(g), the Commission intends to consider the issue of reducing costs of incarceration and overcapacity of prisons, to the extent it is relevant to any identified priority.

The Commission provides this notice to identify tentative priorities for the amendment cycle ending May 1, 2015. The Commission recognizes, however, that other factors, such as the enactment of any legislation requiring Commission action, may affect the Commission's ability to complete work on any or all of its identified priorities by the statutory deadline of May 1, 2015. Accordingly, it may be necessary to continue work on any or all of these issues beyond the amendment cycle ending on May 1, 2015.

As so prefaced, the Commission has identified the following tentative priorities:

(1) Continuation of its work with Congress and other interested parties on statutory mandatory minimum penalties to implement the recommendations set forth in the Commission's 2011 report to Congress, titled *Mandatory Minimum Penalties in the Federal Criminal Justice System,* including its recommendations regarding the severity and scope of mandatory minimum penalties, consideration of expanding the ''safety valve'' at 18 U.S.C. 3553(f), and elimination of the mandatory ''stacking'' of penalties under 18 U.S.C. 924(c), and to develop appropriate guideline amendments in response to any related legislation.

(2) Continuation of its work on economic crimes, including (A) a comprehensive, multi-year study of § 2B1.1 (Theft, Property Destruction, and Fraud) and related guidelines, including examination of the loss table, the definition of loss, and role in the offense; (B) a study of offenses involving fraud on the market; (C) a study of antitrust offenses, including examination of the fine provisions in § 2R1.1 (Bid-Rigging, Price-Fixing or Market Allocation Agreements Among Competitors); and (D) consideration of any amendments to such guidelines that may be appropriate in light of the information obtained from such studies.

(3) Continuation of its multi-year study of statutory and guideline definitions relating to the nature of a defendant's prior conviction (*e.g.,* ''crime of violence,'' ''aggravated felony,'' ''violent felony,'' ''drug trafficking offense,'' and ''felony drug offense'') and the impact of such definitions on the relevant statutory and guideline provisions (*e.g.,* career offender, illegal reentry, and armed career criminal), possibly including recommendations to Congress on any statutory changes that may be appropriate and development of guideline amendments that may be appropriate.

(4) Implementation of the directive to the Commission in section 10 of the Fair Sentencing Act of 2010, Public Law 111–220 (enacted August 3, 2010) (requiring the Commission, not later than 5 years after enactment, to ''study and submit to Congress a report regarding the impact of the changes in Federal sentencing law under this Act and the amendments made by this Act'').

(5) Study of the operation of § 3B1.2 (Mitigating Role) and related provisions

in the *Guidelines Manual* (*e.g.,* the ''mitigating role cap'' in § 2D1.1(a)(5)), and consideration of any amendments to the *Guidelines Manual* that may be appropriate in light of the information obtained from such study.

(6) Study of the guidelines applicable to immigration offenses and related criminal history rules, and consideration of any amendments to such guidelines that may be appropriate in light of the information obtained from such study.

(7) Continuation of its comprehensive, multi-year study of recidivism, including (A) examination of circumstances that correlate with increased or reduced recidivism; (B) possible development of recommendations for using information obtained from such study to reduce costs of incarceration and overcapacity of prisons; and (C) consideration of any amendments to the *Guidelines Manual* that may be appropriate in light of the information obtained from such study.

(8) Continuation of its multi-year review of federal sentencing practices pertaining to violations of conditions of probation and supervised release, including possible consideration of amending the policy statements in Chapter Seven of the *Guidelines Manual.*

(9) Continuation of its work with the legislative, executive, and judicial branches of government, and other interested parties, with respect to the Commission's December 2012 report to Congress, titled *The Continuing Impact of United States* v. *Booker on Federal Sentencing,* and development of appropriate guideline amendments in response to any related legislation.

(10) Continuation of its work with Congress and other interested parties on child pornography offenses to implement the recommendations set forth in the Commission's December 2012 report to Congress, titled *Federal Child Pornography Offenses,* including (A) possible development of appropriate guideline amendments in response to any related legislation; and (B) possible development of guideline amendments on the issue of victim restitution in light of *Paroline* v. *United States,* ____U.S. ____, 134 S.Ct. 1710 (2014).

(11) Consideration of amending the policy statement pertaining to ''compassionate release,'' § 1B1.13 (Reduction in Term of Imprisonment as a Result of Motion by Director of Bureau of Prisons).

(12) Beginning a multi-year effort to simplify the operation of the guidelines, including a review of (A) cross references in the *Guidelines Manual,* (B) the use of relevant conduct in offenses involving conspiracies, (C) the use of acquitted conduct in applying the guidelines, and (D) the use of departures.

(13) Implementation of any crime legislation enacted during the 113th Congress warranting a Commission response.

(14) Resolution of circuit conflicts, pursuant to the Commission's continuing authority and responsibility, under 28 U.S.C. 991(b)(1)(B) and *Braxton* v. *United States,* 500 U.S. 344 (1991), to resolve conflicting interpretations of the guidelines by the federal courts.

(15) Study of the availability of alternatives to incarceration.

(16) Consideration of any miscellaneous guideline application issues coming to the Commission's attention from case law and other sources.

The Commission hereby gives notice that it is seeking comment on these tentative priorities and on any other issues that interested persons believe the Commission should address during the amendment cycle ending May 1, 2015. To the extent practicable, public comment should include the following: (1) A statement of the issue, including, where appropriate, the scope and manner of study, particular problem areas and possible solutions, and any other matters relevant to a proposed priority; (2) citations to applicable sentencing guidelines, statutes, case law, and constitutional provisions; and (3) a direct and concise statement of why the Commission should make the issue a priority.

Authority: 28 U.S.C. § 994(a), (o); USSC Rules of Practice and Procedure 5.2.

Patti B. Saris,

Chair.

[FR Doc. 2014–12619 Filed 5–30–14; 8:45 am]

BILLING CODE 2210–40–P

UNITED STATES SENTENCING COMMISSION

Requests for Nominations; Victims Advisory Group

AGENCY: United States Sentencing Commission.

ACTION: Notice.

SUMMARY: In view of existing vacancies in the membership of the Victims Advisory Group, the United States Sentencing Commission hereby invites any individual who has knowledge, expertise, and/or experience in the area of federal crime victimization to apply to be appointed to the membership of the advisory group. Applications should be received by the Commission not later than July 2, 2014. Applications may be sent to the Commission as indicated in the addresses section below.

DATES: Applications for membership of the Victims Advisory Group should be received not later than July 2, 2014.

ADDRESSES: Applications for membership of the Victims Advisory Group should include a letter of interest and resume, and be sent to the Commission by electronic mail or regular mail. The email address is *pubaffairs@ussc.gov.* The regular mail address is United States Sentencing Commission, One Columbus Circle NE., Suite 2–500, South Lobby, Washington, DC 20002–8002, Attention: Public Affairs.

FOR FURTHER INFORMATION CONTACT: Jeanne Doherty, Public Affairs Officer, 202–502–4502, *jdoherty@ussc.gov.* More information about the Victims Advisory Group is available on the Commission's Web site at *www.ussc.gov/advisory-groups.*

SUPPLEMENTARY INFORMATION: The Victims Advisory Group of the United States Sentencing Commission is a standing advisory group of the United States Sentencing Commission pursuant to 28 U.S.C. § 995 and Rule 5.4 of the Commission's Rules of Practice and Procedure. Under the charter for the advisory group, the purpose of the advisory group is (1) to assist the Commission in carrying out its statutory responsibilities under 28 U.S.C. § 994(o); (2) to provide to the Commission its views on the Commission's activities and work, including proposed priorities and amendments, as they relate to victims of crime; (3) to disseminate information regarding sentencing issues to organizations represented by the Victims Advisory Group and to other victims of crime and victims advocacy groups, as appropriate; and (4) to perform any other functions related to victims of crime as the Commission requests. Under the charter, the advisory group consists of not more than nine members, each of whom may serve not more than two consecutive three-year terms. Each member is appointed by the Commission.

The Commission invites any individual who has knowledge, expertise, and/or experience in the area of federal crime victimization to apply to be appointed to the membership of the Victims Advisory Group by sending a letter of interest and a resume to the Commission as indicated in the **ADDRESSES** section above.

Authority: 28 U.S.C. § 994(a), (o), (p), § 995; USSC Rules of Practice and Procedure 5.2, 5.4.

Patti B. Saris,

Chair.

[FR Doc. 2014–12617 Filed 5–30–14; 8:45 am]

BILLING CODE 2210–40–P

UNITED STATES SENTENCING COMMISSION

Request for Applications; Practitioners Advisory Group

AGENCY: United States Sentencing Commission.

ACTION: Notice.

SUMMARY: Because the terms of certain voting members of the Practitioners Advisory Group are expiring as of October 2014, the United States Sentencing Commission hereby invites any individual who is eligible to be appointed to succeed such a voting member to apply. The voting memberships covered by this notice are two circuit memberships (for the Fourth Circuit and the Eight Circuit). Applications should be received by the Commission not later than August 1, 2014. Applications may be sent to the Commission as indicated in the addresses section below.

DATES: Applications for voting membership of the Practitioners Advisory Group should be received not later than August 1, 2014.

ADDRESSES: Applications for voting membership of the Practitioners Advisory Group should include a letter of interest and resume, and be sent to the Commission by electronic mail or regular mail. The email address is *pubaffairs@ussc.gov.* The regular mail address is United States Sentencing Commission, One Columbus Circle NE., Suite 2–500, South Lobby, Washington, DC 20002–8002, Attention: Public Affairs.

FOR FURTHER INFORMATION CONTACT: Jeanne Doherty, Public Affairs Officer, 202–502–4502, *jdoherty@ussc.gov.* More information about the Practitioners Advisory Group is available on the Commission's Web site at *www.ussc.gov/advisory-groups.*

SUPPLEMENTARY INFORMATION: The Practitioners Advisory Group of the United States Sentencing Commission is a standing advisory group of the United States Sentencing Commission pursuant to 28 U.S.C. § 995 and Rule 5.4 of the Commission's Rules of Practice and Procedure. Under the charter for the advisory group, the purpose of the advisory group is (1) to assist the Commission in carrying out its statutory responsibilities under 28 U.S.C. § 994(o); (2) to provide to the Commission its views on the Commission's activities and work, including proposed priorities and amendments; (3) to disseminate to defense attorneys, and to other professionals in the defense community, information regarding federal sentencing issues; and (4) to perform other related functions as the Commission requests. The advisory group consists of not more than 17 voting members, each of whom may serve not more than two consecutive three-year terms. Of those 17 voting members, one shall be Chair, one shall be Vice Chair, 12 shall be circuit members (one for each federal judicial circuit other than the Federal Circuit), and three shall be at-large members.

To be eligible to serve as a voting member, an individual must be an attorney who (1) devotes a substantial portion of his or her professional work to advocating the interests of privately-represented individuals, or of individuals represented by private practitioners through appointment under the Criminal Justice Act of 1964, within the federal criminal justice system; (2) has significant experience with federal sentencing or post-conviction issues related to criminal sentences; and (3) is in good standing of the highest court of the jurisdiction or jurisdictions in which he or she is admitted to practice. Additionally, to be eligible to serve as a circuit member, the individual's primary place of business or a substantial portion of his or her practice must be in the circuit concerned. Each voting member is appointed by the Commission.

The Commission invites any individual who is eligible to be appointed to a voting membership covered by this notice (i.e., the circuit memberships for the Fourth Circuit and the Eight Circuit) to apply by sending a letter of interest and a resume to the Commission as indicated in the **ADDRESSES** section above.

Authority: 28 U.S.C. § 994(a), (o), (p), § 995; USSC Rules of Practice and Procedure 5.2, 5.4.

Patti B. Saris,

Chair.

[FR Doc. 2014–12618 Filed 5–30–14; 8:45 am]

BILLING CODE 2210–40–P

FEDERAL REGISTER

Vol. 79 Monday,

No. 105 June 2, 2014

Part II

Department of Homeland Security

U.S. Customs and Border Protection

Distribution of Continued Dumping and Subsidy Offset to Affected Domestic Producers; Notice

DEPARTMENT OF HOMELAND SECURITY

U.S. Customs and Border Protection

Distribution of Continued Dumping and Subsidy Offset to Affected Domestic Producers

AGENCY: U.S. Customs and Border Protection, Department of Homeland Security.

ACTION: Notice of intent to distribute offset for Fiscal Year 2014.

SUMMARY: Pursuant to the *Continued Dumping and Subsidy Offset Act of 2000,* this document is U.S. Customs and Border Protection's *(CBP)* notice of intent to distribute assessed antidumping or countervailing duties (known as the continued dumping and subsidy offset) for Fiscal Year 2014 in connection with countervailing duty orders, antidumping duty orders, or findings under the *Antidumping Act of 1921.* This document provides the instructions for affected domestic producers, or anyone alleging eligibility to receive a distribution, to file certifications to claim a distribution in relation to the listed orders or findings.

DATES: Certifications to obtain a continued dumping and subsidy offset under a particular order or finding must be received by August 1, 2014. Any certification received after August 1, 2014 will be denied, making claimants ineligible for the distribution.

ADDRESSES: Certifications and any other correspondence (whether by mail, or an express or courier service) must be addressed to the Assistant Commissioner, Office of Administration, U.S. Customs and Border Protection, Revenue Division, Attention: CDSOA Team, 6650 Telecom Drive, Suite 100, Indianapolis, IN, 46278.

FOR FURTHER INFORMATION CONTACT: CDSOA Team, Revenue Division, 6650 Telecom Drive, Suite 100, Indianapolis, IN, 46278; telephone (317) 614–4462.

SUPPLEMENTARY INFORMATION:

Background

The *Continued Dumping and Subsidy Offset Act of 2000* (CDSOA) was enacted on October 28, 2000, as part of the *Agriculture, Rural Development, Food and Drug Administration, and Related Agencies Appropriations Act,* 2001 (the ''Act''). The provisions of the CDSOA are contained in title X (sections 1001–1003) of the Act.

The CDSOA, in section 1003 of the Act, further amended title VII of the *Tariff Act of 1930* by adding a new section 754 (codified at 19 U.S.C. 1675c) in order to provide that assessed duties received pursuant to a countervailing duty order, an antidumping duty order, or a finding under the *Antidumping Act of 1921* will be distributed to affected domestic producers for certain qualifying expenditures that these producers incur after the issuance of such an order or finding. The term ''affected domestic producer'' means any manufacturer, producer, farmer, rancher or worker representative (including associations of such persons) who:

(A) Was a petitioner or interested party in support of a petition with respect to which an antidumping order, a finding under the Antidumping Act of 1921, or a countervailing duty order that has been entered;

(B) Remains in operation continuing to produce the product covered by a countervailing duty order, an antidumping duty order, or a finding under the Antidumping Act of 1921; and

(C) Has not been acquired by another company or business that is related to a company that opposed the antidumping or countervailing duty investigation that led to the order or finding (e.g., opposed the petition or otherwise presented evidence in opposition to the petition).

The distribution that these parties may receive is known as the continued dumping and subsidy offset.

Section 7601(a) of the *Deficit Reduction Act of 2005* repealed 19 U.S.C. 1675c. According to section 7701 of the *Deficit Reduction Act,* the repeal takes effect as if enacted on October 1, 2005. However, section 7601(b) provides that all duties collected on an entry filed before October 1, 2007, must be distributed as if 19 U.S.C. 1675c had not been repealed by section 7601(a). The funds available for distribution were also affected by section 822 of the *Claims Resolution Act of 2010* and section 504 of the *Tax Relief, Unemployment Insurance Reauthorization, and Job Creation Act of 2010.*

Consequently, the full impact of the CDSOA repeal on amounts available for distribution may be delayed for several years. Because of the statutory constraints in the assessments of antidumping and countervailing duties, the distribution process will be continued for an undetermined period; however, the amount of money available for distribution can be expected to continue to diminish over time. It should also be noted that amounts distributed may be subject to recovery as a result of reliquidations, court actions, administrative errors, and other reasons.

List of Orders or Findings and Affected Domestic Producers

It is the responsibility of the U.S. International Trade Commission (USITC) to ascertain and timely forward to U.S. Customs and Border Protection (CBP) a list of the affected domestic producers that are potentially eligible to receive an offset in connection with an order or finding. In this regard, it is noted that USITC has supplied CBP with the list of individual antidumping and countervailing duty cases, and the affected domestic producers associated with each case who are potentially eligible to receive an offset. This list appears at the end of this document.

A significant amount of litigation has challenged various provisions of the CDSOA, most notably the definition of the term ''affected domestic producer.'' In two decisions, the Court of Appeals for the Federal Circuit (CAFC) upheld the constitutionality of the support requirement contained in the CDSOA. Specifically, in *SKF USA Inc.* v. *United States Customs & Border Prot.,* 556 F. 3d 1337 (Fed. Circ. 2009), the CAFC held that the CDSOA's support requirement did not violate either the First or Fifth Amendments. The Supreme Court of the United States denied plaintiff's petition for certiorari, *SKF USA, Inc.* v. *United States Customs & Border Prot.,* 560 U.S. 903 (S. Ct. 2010). Similarly, in *PS Chez Sidney, L.L.C.* v. *United States,* 409 Fed. Appx. 327 (Fed. Cir. 2010), the CAFC summarily reversed the U.S. Court of International Trade's judgment that the support requirement was unconstitutional, allowing only plaintiff's non-constitutional claims to go forward. *See PS Chez Sidney, L.L.C.,* v. *United States,* 684 F.3d 1374 (Fed. Cir. 2012). Furthermore, in two cases interpreting the CDSOA's language, the CAFC concluded that a producer who never indicates support for a dumping petition by letter or through questionnaire response, despite the act of otherwise filling out a questionnaire, cannot be an affected domestic producer. *Ashley Furniture Indus.* v. *United States; Ethan Allen Global, Inc.* v. *United States,* 734 F.3d 1306 (Fed. Cir. 2013).

Domestic producers who are not on the USITC list but believe they nonetheless are eligible for a CDSOA distribution under one or more antidumping and/or countervailing duty cases are required, as are all potential claimants that expressly appear on the list, to properly file their certification(s) within 60 days after this notice is published. Such domestic producers

must allege all other bases for eligibility in their certification(s). CBP will evaluate the merits of such claims in accordance with the relevant statutes, regulations, and decisions. Certifications that are not timely filed within the requisite 60 days and/or that fail to sufficiently establish a basis for eligibility will be summarily denied. Additionally, CBP may not make a final decision regarding a claimant's eligibility to receive funds until certain legal issues which may affect that claimant's eligibility are resolved. In these instances, CBP may withhold an amount of funds corresponding to the claimant's alleged *pro rata* share of funds from distribution pending the resolution of those legal issues.

It should also be noted that the CAFC ruled in *Canadian Lumber Trade Alliance* v. *United States,* 517 F.3d 1319 (Fed. Cir. 2008), *cert. denied sub nom. United States Steel* v. *Canadian Lumber Trade Alliance,* 129 S. Ct. 344 (2008), that CBP was not authorized to distribute such antidumping and countervailing duties to the extent they were derived from goods from countries that are parties to the North American Free Trade Agreement (NAFTA). Due to this decision, CBP will no longer list cases related to NAFTA on the Preliminary Amounts Available report, and no distributions will be issued on these cases.

Regulations Implementing the CDSOA

It is noted that CBP published Treasury Decision (T.D.) 01–68 (Distribution of Continued Dumping and Subsidy Offset to Affected Domestic Producers) in the **Federal Register** (66 FR 48546) on September 21, 2001, which was effective as of that date, in order to implement the CDSOA. The final rule added a new subpart F to part 159 of title 19, Code of Federal Regulations (19 CFR part 159, subpart F (§§ 159.61–159.64)). More specific guidance regarding the filing of certifications is provided in this notice in order to aid affected domestic producers and other domestic producers alleging eligibility (''claimants'' or ''domestic producers'').

Notice of Intent To Distribute Offset

This document announces that CBP intends to distribute to affected domestic producers the assessed antidumping or countervailing duties that are available for distribution in Fiscal Year 2014 in connection with those antidumping duty orders or findings or countervailing duty orders that are listed in this document. All distributions will be issued by paper check to the address provided by the claimants. Section 159.62(a) of title 19 (19 CFR 159.62(a)) provides that CBP will publish such a notice of intention to distribute assessed duties at least 90 calendar days before the end of a fiscal year. Failure to publish the notice at least 90 calendar days before the end of the fiscal year will not impact an affected domestic producer's obligation to file a timely certification within 60 days after the notice is published. *See Dixon Ticonderoga* v. *United States,* 468 F.3d 1353, 1354 (Fed. Cir. 2006).

Certifications; Submission and Content

To obtain a distribution of the offset under a given order or finding, an affected domestic producer (and anyone alleging eligibility to receive a distribution) must submit a certification for each order or finding under which a distribution is sought, to CBP, indicating their desire to receive a distribution. To be eligible to obtain a distribution, certifications must be received by CBP no later than 60 calendar days after the date of publication of this notice of intent to distribute in the **Federal Register**. All certifications not received by the 60th day will not be eligible to receive a distribution.

As required by 19 CFR 159.62(b), this notice provides the case name and number of the order or finding concerned, as well as the specific instructions for filing a certification under § 159.63 to claim a distribution. Section 159.62(b) also provides that the dollar amounts subject to distribution that are contained in the Special Account for each listed order or finding are to appear in this notice. However, these dollar amounts were not available in time for inclusion in this publication. The preliminary amounts will be posted on the CBP website *http://www.cbp.gov*). However, the final amounts available for disbursement may be higher or lower than the preliminary amounts.

CBP will provide general information to claimants regarding the preparation of certification(s). However, it remains the sole responsibility of the domestic producer to ensure that the certification is correct, complete, and accurate so as to demonstrate the eligibility of the domestic producer for the distribution requested. Failure to ensure that the certification is correct, complete, and accurate as provided in this notice will result in the domestic producer not receiving a distribution.

Specifically, to obtain a distribution of the offset under a given order or finding, each potential claimant must timely submit a certification containing the required information detailed below as to the eligibility of the domestic producer (or anyone alleging eligibility) to receive the requested distribution and the total amount of the distribution that the domestic producer is claiming. Certifications should be submitted to the Assistant Commissioner, Office of Administration, U.S. Customs and Border Protection, Revenue Division, Attention: CDSOA Team, 6650 Telecom Drive, Suite 100, Indianapolis, IN 46278. The certification must enumerate the qualifying expenditures incurred by the domestic producer since the issuance of an order or finding and it must demonstrate that the domestic producer is eligible to receive a distribution as an affected domestic producer or allege another basis for eligibility. Any false statements made in connection with certifications submitted to CBP may give rise to liability under the *False Claims Act* (*see* 31 U.S.C. 3729–3733) and/or to criminal prosecution.

A successor to a company that was an affected domestic producer at the time of acquisition should consult 19 CFR 159.61(b)(1)(i). Any company claiming to be the successor company to an affected domestic producer will be deemed to have consented to joint and several liability for the return of any overpayments arising under § 159.64(c)(3) that were previously paid to the predecessor. CBP may require the successor company to provide documents to support its eligibility to receive a distribution as set out in § 159.63(d). Additionally, any individual or company who purchases any portion of the operating assets of an affected domestic producer, successor to an affected domestic producer, or an entity that otherwise previously received distributions may be jointly and severally liable for the return of any overpayments arising under § 159.64(c)(3) that were previously paid to the entity from which the operating assets were purchased or its predecessor, regardless of whether the purchasing individual or company is deemed a successor company for purposes of receiving distributions.

A member company (or its successor) of an association that appears on the list of affected domestic producers in this notice, where the member company itself does not appear on this list, should consult 19 CFR 159.61(b)(1)(ii). Specifically, for a certification under 19 CFR 159.61(b)(1)(ii), the claimant must name the association of which it is a member, specifically establish that it was a member of the association at the time the association filed the petition with the USITC, and establish that the claimant is a current member of the

association. In order to promote accurate filings and more efficiently process the distributions, we offer the following guidance:

- If claimants are members of an association but the association does not file on their behalf, each association will need to provide their members with a statement that contains notarized company-specific information including dates of membership and an original signature from an authorized representative of the association.
- An association filing a certification on behalf of a member must also provide a power of attorney or other evidence of legal authorization from each of the domestic producers it is representing.
- An association filing a certification on behalf of a member is responsible for verifying the accuracy of the member's financial records, which support their claim, and is responsible for that certification.
- Any association filing a certification on behalf of a member is responsible for verifying the legal sufficiency and accuracy of the member's financial records, which support the claim and may be liable for repayment of any claim found to have been paid in error.

The association may file a certification in its own right to claim an offset for that order or finding, but its qualifying expenditures would be limited to those expenditures that the association itself has incurred after the date of the order or finding in connection with the particular case.

As provided in 19 CFR 159.63(a), certifications to obtain a distribution of an offset must be received by CBP no later than 60 calendar days after the date of publication of the notice of intent in the **Federal Register**. All certifications received after the 60-day deadline will be summarily denied, making claimants ineligible for the distribution regardless of whether or not they appeared on the USITC list.

A list of all certifications received will be published on the CBP Web site (*http://www.cbp.gov*) shortly after the receipt deadline. This publication will not confirm acceptance or validity of the certification, but merely receipt of the certification. Due to the high volume of certifications, CBP is unable to respond to individual telephone or written inquiries regarding the status of a certification appearing on the list.

While there is no required format for a certification, CBP has developed a standard certification form to aid claimants in filing certifications. The certification form is available at *https://www.pay.gov* under the Public Form Name ''Continued Dumping and Subsidy Offset Act of 2000 Certification'' (CBP Form Number 7401) or by directing a Web browser to *https://www.pay.gov/paygov/forms/form Instance.html?agencyFormId=8776895.* The certification form can be submitted electronically through *https://www.pay.gov* or by mail. All certifications not submitted electronically must include original signatures. Regardless of the format for a certification, per 19 CFR 159.63(b), the certification must contain the following information:

(1) The date of this **Federal Register** notice;

(2) The Commerce case number;

(3) The case name (producer/country);

(4) The name of the domestic producer and any name qualifier, if applicable (for example, any other name under which the domestic producer does business or is also known);

(5) The mailing address of the domestic producer (if a post office box, the physical street address must also appear) including, if applicable, a specific room number or department;

(6) The Internal Revenue Service (IRS) number (with suffix) of the domestic producer, employer identification number, or social security number, as applicable;

(7) The specific business organization of the domestic producer (corporation, partnership, sole proprietorship);

(8) The name(s) of any individual(s) designated by the domestic producer as the contact person(s) concerning the certification, together with the phone number(s), mailing address, and, if available, facsimile transmission number(s) and electronic mail (email) address(es) for the person(s). Correspondence from CBP may be directed to the designated contact(s) by either mail or phone or both;

(9) The total dollar amount claimed;

(10) The dollar amount claimed by category, as described in the section below entitled ''Amount Claimed for Distribution'';

(11) A statement of eligibility, as described in the section below entitled ''Eligibility To Receive Distribution''; and

(12) For certifications not submitted electronically through *https://www.pay.gov*, an original signature by an individual legally authorized to bind the producer.

Qualifying Expenditures That May Be Claimed for Distribution

Qualifying expenditures that may be offset by a distribution of assessed antidumping and countervailing duties encompass those expenditures incurred by the domestic producer after issuance of an antidumping duty order or finding or a countervailing duty order, and prior to its termination, provided that such expenditures fall within certain categories. The repeal language parallels the termination of an order. Therefore, for duty orders or findings that have not been previously revoked, expenses must be incurred before October 1, 2007, to be eligible for offset. For duty orders or findings that have been revoked, expenses must be incurred before the effective date of the revocation to be eligible for offset. For example, assume for case A–331–802 certain frozen warm-water shrimp and prawns from Ecuador, that the order date is February 1, 2005, and that the revocation effective date is August 15, 2007. In this case, eligible expenditures would have to be incurred between February 1, 2005, and August 15, 2007.

For the convenience and ease of the domestic producers, CBP is providing guidance on what the agency takes into consideration when making a calculation for each of the following categories:

(1) Manufacturing facilities (Any facility used for the transformation of raw material into a finished product that is the subject of the related order or finding);

(2) Equipment (Goods that are used in a business environment to aid in the manufacturing of a product that is the subject of the related order or finding);

(3) Research and development (Seeking knowledge and determining the best techniques for production of the product that is the subject of the related order or finding);

(4) Personnel training (Teaching of specific useful skills to personnel, that will improve performance in the production process of the product that is the subject of the related order or finding);

(5) Acquisition of technology (Acquisition of applied scientific knowledge and materials to achieve an objective in the production process of the product that is the subject of the related order or finding);

(6) Health care benefits for employees paid for by the employer (Health care benefits paid to employees who are producing the specific product that is the subject of the related order or finding);

(7) Pension benefits for employees paid for by the employer (Pension benefits paid to employees who are producing the specific product that is the subject of the related order or finding);

(8) Environmental equipment, training, or technology (Equipment,

training, or technology used in the production of the product that is the subject of the related order or finding, that will assist in preventing potentially harmful factors from impacting the environment);

(9) Acquisition of raw materials and other inputs (Purchase of unprocessed materials or other inputs needed for the production of the product that is the subject of the related order or finding); and

(10) Working capital or other funds needed to maintain production (Assets of a business that can be applied to its production of the product that is the subject of the related order or finding).

Amount Claimed for Distribution

In calculating the amount of the distribution being claimed as an offset, the certification must indicate:

(1) The total amount of any qualifying expenditures previously certified by the domestic producer, and the amount certified by category;

(2) The total amount of those expenditures which have been the subject of any prior distribution for the order or finding being certified under 19 U.S.C. 1675c; and

(3) The net amount for new and remaining qualifying expenditures being claimed in the current certification (the total amount previously certified as noted in item ''(1)'' above minus the total amount that was the subject of any prior distribution as noted in item ''(2)'' above). In accordance with 19 CFR 159.63(b)(2)(i)–(iii), CBP will deduct the amount of any prior distribution from the producer's claimed amount for that case. Total amounts disbursed by CBP under the CDSOA for some prior Fiscal Years are available on the CBP website.

Additionally, under 19 CFR 159.61(c), these qualifying expenditures must be related to the production of the same product that is the subject of the order or finding, with the exception of expenses incurred by associations which must be related to a specific case. Any false statements made to CBP concerning the amount of distribution being claimed as an offset may give rise to liability under the *False Claims Act* (*see* 31 U.S.C. 3729–3733) and/or to criminal prosecution.

Eligibility To Receive Distribution

As noted, the certification must contain a statement that the domestic producer desires to receive a distribution and is eligible to receive the distribution as an affected domestic producer or on another legal basis. Also, the domestic producer must affirm that the net amount certified for distribution does not encompass any qualifying expenditures for which distribution has previously been made (19 CFR 159.63(b)(3)(i)). Any false statements made in connection with certifications submitted to CBP may give rise to liability under the *False Claims Act* (*see* 31 U.S.C. 3729–3733) and/or to criminal prosecution.

Furthermore, under 19 CFR 159.63(b)(3)(ii), where a domestic producer files a separate certification for more than one order or finding using the same qualifying expenditures as the basis for distribution in each case, each certification must list all the other orders or findings where the producer is claiming the same qualifying expenditures.

Moreover, as required by 19 U.S.C. 1675c(b)(1) and 19 CFR 159.63(b)(3)(iii), the certification must include information as to whether the domestic producer remains in operation at the time the certifications are filed and continues to produce the product covered by the particular order or finding under which the distribution is sought. If a domestic producer is no longer in operation, or no longer produces the product covered by the order or finding, the producer will not be considered an affected domestic producer entitled to receive a distribution.

In addition, as required by 19 U.S.C. 1675c(b)(5) and 19 CFR 159.63(b)(3)(iii), the domestic producer must state whether it has been acquired by a company that opposed the investigation or was acquired by a business related to a company that opposed the investigation. If a domestic producer has been so acquired, the producer will not be considered an affected domestic producer entitled to receive a distribution. However, CBP may not make a final decision regarding a claimant's eligibility to receive funds until certain legal issues which may affect that claimant's eligibility are resolved. In these instances, CBP may withhold an amount of funds corresponding to the claimant's alleged pro rata share of funds from distribution pending the resolution of those legal issues.

The certification must be executed and dated by a party legally authorized to bind the domestic producer and it must state that the information contained in the certification is true and accurate to the best of the certifier's knowledge and belief under penalty of law, and that the domestic producer has records to support the qualifying expenditures being claimed (see section below entitled ''Verification of Certification''). Moreover as provided in 19 CFR 159.64(b)(3), overpayments to affected domestic producers are recoverable by CBP and CBP reserves the right to use all available collection tools to recover overpayments, including but not limited to garnishments, court orders, administrative offset, enrollment in the Treasury Offset program, and/or offset of tax refund payments. Overpayments may occur for a variety of reasons such as reliquidations, court actions, settlements, insufficient verification of a certification in response to an inquiry from CBP, and administrative errors. With diminished amounts available over time, the likelihood that these events will require the recovery of funds previously distributed will increase. As a result, domestic producers who receive distributions under the CDSOA may wish to set aside any funds received in case it is subsequently determined that an overpayment has occurred. CBP considers the submission of a certification and the negotiation of any distribution checks received as acknowledgements and acceptance of the claimant's obligation to return those funds upon demand.

Review and Correction of Certification

A certification that is submitted in response to this notice of distribution and received within 60 calendar days after the date of publication of the notice in the **Federal Register** may, at CBP's sole discretion, be subject to review before acceptance to ensure that all informational requirements are complied with and that any amounts set forth in the certification for qualifying expenditures, including the amount claimed for distribution, appear to be correct. A certification that is found to be materially incorrect or incomplete will be returned to the domestic producer within 15 business days after the close of the 60 calendar-day filing period, as provided in 19 CFR 159.63(c). In making this determination, CBP will not speculate as to the reason for the error (*e.g.,* intentional, typographical, *etc.*). CBP must receive a corrected certification from the domestic producer and/or an association filing on behalf of an association member within 10 business days from the date of the original denial letter. Failure to receive a corrected certification within 10 business days will result in denial of the certification at issue. It is the sole responsibility of the domestic producer to ensure that the certification is correct, complete, and satisfactory so as to demonstrate the eligibility of the domestic producer to the distribution requested. Failure to ensure that the certification is correct, complete, and

satisfactory will result in the domestic producer not receiving a distribution.

Verification of Certification

Certifications are subject to CBP's verification. Claimants may also be required to provide copies of additional records for further review by CBP. Therefore, parties are required to maintain records supporting their claims for a period of five years after the filing of the certification (19 CFR 159.63(d)). The records must support each qualifying expenditure enumerated in the certification, and they must support how the qualifying expenditures are determined to be related to the production of the product covered by the order or finding. Although CBP will accept comments and information from the public and other domestic producers, CBP retains complete discretion regarding the initiation and conduct of investigations stemming from such information. In the event that a distribution is made to a domestic producer from whom CBP later seeks verification of the certification and sufficient supporting documentation is not provided as determined by CBP, then the amounts paid to the affected domestic producer are recoverable by CBP as an overpayment. CBP reserves the right to use all available collection tools to recover overpayments, including but not limited to garnishments, court orders, administrative offset, enrollment in the Treasury Offset program, and/or offset of tax refund payments. CBP considers the submission of a certification and the negotiation of any distribution checks received as acknowledgements and acceptance of the claimant's obligation to return those funds upon demand. Additionally, the submission of false statements, documents, or records in connection with a certification or verification of a certification may give rise to liability under the *False Claims Act* (*see* 31 U.S.C. 3729–3733) and/or to criminal prosecution.

Disclosure of Information in Certifications; Acceptance by Producer

The name of the claimant, the total dollar amount claimed by the party on the certification, as well as the total dollar amount that CBP actually disburses to that affected domestic producer as an offset, will be available for disclosure to the public, as specified in 19 CFR 159.63(e). To this extent, the submission of the certification is construed as an understanding and acceptance on the part of the domestic producer that this information will be disclosed to the public and a waiver of any right to privacy or non-disclosure. Additionally, a statement in a certification that this information is proprietary and exempt from disclosure may result in CBP's rejection of the certification.

List of Orders or Findings and Related Domestic Producers

The list of individual antidumping duty orders or findings and countervailing duty orders is set forth below together with the affected domestic producers associated with each order or finding who are potentially eligible to receive an offset. Those domestic producers not on the list must allege another basis for eligibility in their certification. Appearance of a domestic producer on the list is not a guarantee of distribution.

Dated: May 21, 2014.

Eugene Schied,

Assistant Commissioner, Office of Administration.

Commerce case No.	Commission case No.	Product/country	Petitioners/supporters
A–122–006	AA1921–49	Steel Jacks/Canada	Bloomfield Manufacturing (formerly Harrah Manufacturing).
			Seaburn Metal Products.
A–122–047	AA1921–127	Elemental Sulphur/Canada	Duval.
A–122–085	731–TA–3	Sugar and Syrups/Canada	Amstar Sugar.
A–122–401	731–TA–196	Red Raspberries/Canada	Northwest Food Producers' Association.
			Oregon Caneberry Commission.
			Rader Farms.
			Ron Roberts.
			Shuksan Frozen Food.
			Washington Red Raspberry Commission.
A–122–503	731–TA–263	Iron Construction Castings/Canada	Alhambra Foundry.
			Allegheny Foundry.
			Bingham & Taylor.
			Campbell Foundry.
			Charlotte Pipe & Foundry.
			Deeter Foundry.
			East Jordan Foundry.
			Le Baron Foundry.
			Municipal Castings.
			Neenah Foundry.
			Opelika Foundry.
			Pinkerton Foundry.
			Tyler Pipe.
			US Foundry & Manufacturing.
			Vulcan Foundry.
A–122–506	731–TA–276	Oil Country Tubular Goods/Canada	CF&I Steel.
			Copperweld Tubing.
			Cyclops.
			KPC.
			Lone Star Steel.
			LTV Steel.
			Maverick Tube.
			Quanex.
			US Steel.
A–122–601	731–TA–312	Brass Sheet and Strip/Canada	Allied Industrial Workers of America.
			American Brass.
			Bridgeport Brass.

Commerce case No.	Commission case No.	Product/country	Petitioners/supporters
			Chase Brass & Copper.
			Hussey Copper.
			International Association of Machinists & Aerospace Workers.
			Mechanics Educational Society of America (Local 56).
			The Miller Company.
			Olin.
			Revere Copper Products.
			United Steelworkers of America.
A–122–605	731–TA–367	Color Picture Tubes/Canada	Industrial Union Department, AFL–CIO.
			International Association of Machinists & Aerospace Workers.
			International Brotherhood of Electrical Workers.
			International Union of Electronic, Electrical, Technical, Salaried and Machine Workers.
			Philips Electronic Components Group.
			United Steelworkers of America.
			Zenith Electronics.
A–122–804	731–TA–422	Steel Rails/Canada	Bethlehem Steel.
			CF&I Steel.
A–122–814	731–TA–528	Pure Magnesium/Canada	Magnesium Corporation of America.
A–122–822	731–TA–614	Corrosion-Resistant Carbon Steel Flat Products/Canada.	Armco Steel.
			Bethlehem Steel.
			California Steel Industries.
			Geneva Steel.
			Gulf States Steel.
			Inland Steel Industries.
			LTV Steel.
			Lukens Steel.
			National Steel.
			Nextech.
			Rouge Steel Co.
			Sharon Steel.
			Theis Precision Steel.
			Thompson Steel.
			US Steel.
			United Steelworkers of America.
			WCI Steel.
			Weirton Steel.
A–122–823	731–TA–575	Cut-to-Length Carbon Steel Plate/Canada	Bethlehem Steel.
			California Steel Industries.
			Geneva Steel.
			Gulf States Steel.
			Inland Steel Industries.
			Lukens Steel.
			National Steel.
			Nextech.
			Sharon Steel.
			Theis Precision Steel.
			Thompson Steel.
			US Steel.
			United Steelworkers of America.
A–122–830	731–TA–789	Stainless Steel Plate in Coils/Canada	Allegheny Ludlum.
			Armco Steel.
			J&L Specialty Steel.
			Lukens Steel.
			North American Stainless.
A–122–838	731–TA–928	Softwood Lumber/Canada	71 Lumber Co.
			Almond Bros Lbr Co.
			Anthony Timberlands.
			Balfour Lbr Co.
			Ball Lumber.
			Banks Lumber Company.
			Barge Forest Products Co.
			Beadles Lumber Co.
			Bearden Lumber.
			Bennett Lumber.
			Big Valley Band Mill.
			Bighorn Lumber Co Inc.
			Blue Mountain Lumber.
			Buddy Bean Lumber.
			Burgin Lumber Co Ltd.

Commerce case No.	Commission case No.	Product/country	Petitioners/supporters
			Burt Lumber Company. C&D Lumber Co. Ceda-Pine Veneer. Cersosimo Lumber Co Inc. Charles Ingram Lumber Co Inc. Charleston Heart Pine. Chesterfield Lumber. Chips. Chocorua Valley Lumber Co. Claude Howard Lumber. Clearwater Forest Industries. CLW Inc. CM Tucker Lumber Corp. Coalition for Fair Lumber Imports Executive Committee. Cody Lumber Co. Collins Pine Co. Collums Lumber. Columbus Lumber Co. Contoocook River Lumber. Conway Guiteau Lumber. Cornwright Lumber Co. Crown Pacific. Daniels Lumber Inc. Dean Lumber Co Inc. Deltic Timber Corporation. Devils Tower Forest Products. DiPrizio Pine Sales. Dorchester Lumber Co. DR Johnson Lumber. East Brainerd Lumber Co. East Coast Lumber Company. Eas-Tex Lumber. ECK Wood Products. Ellingson Lumber Co. Elliott Sawmilling. Empire Lumber Co. Evergreen Forest Products. Excalibur Shelving Systems Inc. Exley Lumber Co. FH Stoltze Land & Lumber Co. FL Turlington Lbr Co Inc. Fleming Lumber. Flippo Lumber. Floragen Forest Products. Frank Lumber Co. Franklin Timber Co. Fred Tebb & Sons. Fremont Sawmill. Frontier Resources. Garrison Brothers Lumber Co and Subsidiaries. Georgia Lumber. Gilman Building Products. Godfrey Lumber. Granite State Forest Prod Inc. Great Western Lumber Co. Greenville Molding Inc. Griffin Lumber Company. Guess Brothers Lumber. Gulf Lumber. Gulf States Paper. Guy Bennett Lumber. Hampton Resources. Hancock Lumber. Hankins Inc. Hankins Lumber Co. Harrigan Lumber. Harwood Products. Haskell Lumber Inc. Hatfield Lumber. Hedstrom Lumber. Herrick Millwork Inc. HG Toler & Son Lumber Co Inc.

Commerce case No.	Commission case No.	Product/country	Petitioners/supporters
			HG Wood Industries LLC. Hogan & Storey Wood Prod. Hogan Lumber Co. Hood Industries. HS Hofler & Sons Lumber Co Inc. Hubbard Forest Ind Inc. HW Culp Lumber Co. Idaho Veneer Co. Industrial Wood Products. Intermountain Res LLC. International Paper. J Franklin Jones Lumber Co Inc. Jack Batte & Sons Inc. Jasper Lumber Company. JD Martin Lumber Co. JE Jones Lumber Co. Jerry G Williams & Sons. JH Knighton Lumber Co. Johnson Lumber Company. Jordan Lumber & Supply. Joseph Timber Co. JP Haynes Lbr Co Inc. JV Wells Inc. JW Jones Lumber. Keadle Lumber Enterprises. Keller Lumber. King Lumber Co. Konkolville Lumber. Langdale Forest Products. Laurel Lumber Company. Leavitt Lumber Co. Leesville Lumber Co. Limington Lumber Co. Longview Fibre Co. Lovell Lumber Co Inc. M Kendall Lumber Co. Manke Lumber Co. Marriner Lumber Co. Mason Lumber. MB Heath & Sons Lumber Co. MC Dixon Lumber Co Inc. Mebane Lumber Co Inc. Metcalf Lumber Co Inc. Millry Mill Co Inc. Moose Creek Lumber Co. Moose River Lumber. Morgan Lumber Co Inc. Mount Yonah Lumber Co. Nagel Lumber. New Kearsarge Corp. New South. Nicolet Hardwoods. Nieman Sawmills SD. Nieman Sawmills WY. North Florida. Northern Lights Timber & Lumber. Northern Neck Lumber Co. Ochoco Lumber Co. Olon Belcher Lumber Co. Owens and Hurst Lumber. Packaging Corp of America. Page & Hill Forest Products. Paper, Allied-Industrial, Chemical and Energy Workers International Union. Parker Lumber. Pate Lumber Co Inc. PBS Lumber. Pedigo Lumber Co. Piedmont Hardwood Lumber Co. Pine River Lumber Co. Pinecrest Lumber Co. Pleasant River Lumber Co. Pleasant Western Lumber Inc. Plum Creek Timber.

Commerce case No.	Commission case No.	Product/country	Petitioners/supporters
			Pollard Lumber. Portac. Potlatch. Potomac Supply. Precision Lumber Inc. Pruitt Lumber Inc. R Leon Williams Lumber Co. RA Yancey Lumber. Rajala Timber Co. Ralph Hamel Forest Products. Randy D Miller Lumber. Rappahannock Lumber Co. Regulus Stud Mills Inc. Riley Creek Lumber. Roanoke Lumber Co. Robbins Lumber. Robertson Lumber. Roseburg Forest Products Co. Rough & Ready. RSG Forest Products. Rushmore Forest Products. RY Timber Inc. Sam Mabry Lumber Co. Scotch Lumber. SDS Lumber Co. Seacoast Mills Inc. Seago Lumber. Seattle-Snohomish. Seneca Sawmill. Shaver Wood Products. Shearer Lumber Products. Shuqualak Lumber. SI Storey Lumber. Sierra Forest Products. Sierra Pacific Industries. Sigfridson Wood Products. Silver City Lumber Inc. Somers Lbr & Mfg Inc. South & Jones. South Coast. Southern Forest Industries Inc. Southern Lumber. St Laurent Forest Products. Starfire Lumber Co. Steely Lumber Co Inc. Stimson Lumber. Summit Timber Co. Sundance Lumber. Superior Lumber. Swanson Superior Forest Products Inc. Swift Lumber. Tamarack Mill. Taylor Lumber & Treating Inc. Temple-Inland Forest Products. Thompson River Lumber. Three Rivers Timber. Thrift Brothers Lumber Co Inc. Timco Inc. Tolleson Lumber. Toney Lumber. TR Miller Mill Co. Tradewinds of Virginia Ltd. Travis Lumber Co. Tree Source Industries Inc. Tri-State Lumber. TTT Studs. United Brotherhood of Carpenters and Joiners. Viking Lumber Co. VP Kiser Lumber Co. Walton Lumber Co Inc. Warm Springs Forest Products. Westvaco Corp. Wilkins, Kaiser & Olsen Inc.

Commerce case No.	Commission case No.	Product/country	Petitioners/supporters
			WM Shepherd Lumber Co. WR Robinson Lumber Co Inc. Wrenn Brothers Inc. Wyoming Sawmills. Yakama Forest Products. Younce & Ralph Lumber Co Inc. Zip-O-Log Mills Inc.
A–122–840	731–TA–954	Carbon and Certain Alloy Steel Wire Rod/Canada.	AmeriSteel. Birmingham Steel. Cascade Steel Rolling Mills. Connecticut Steel Corp. Co-Steel Raritan. GS Industries. Keystone Consolidated Industries. North Star Steel Texas. Nucor Steel-Nebraska (a division of Nucor Corp). Republic Technologies International. Rocky Mountain Steel Mills.
A–122–847	731–TA–1019B	Hard Red Spring Wheat/Canada	North Dakota Wheat Commission.
A–201–504	731–TA–297	Porcelain-on-Steel Cooking Ware/Mexico	General Housewares.
A–201–601	731–TA–333	Fresh Cut Flowers/Mexico	Burdette Coward. California Floral Council. Floral Trade Council. Florida Flower Association. Gold Coast Uanko Nursery. Hollandia Wholesale Florist. Manatee Fruit. Monterey Flower Farms. Topstar Nursery.
A–201–802	731–TA–451	Gray Portland Cement and Clinker/Mexico	Alamo Cement. Blue Circle. BoxCrow Cement. Calaveras Cement. Capitol Aggregates. Centex Cement. Florida Crushed Stone. Gifford-Hill. Hanson Permanente Cement. Ideal Basic Industries. Independent Workers of North America (Locals 49, 52, 89, 192 and 471). International Union of Operating Engineers (Local 12). National Cement Company of Alabama. National Cement Company of California. Phoenix Cement. Riverside Cement. Southdown. Tarmac America. Texas Industries.
A–201–805	731–TA–534	Circular Welded Nonalloy Steel Pipe/Mexico	Allied Tube & Conduit. American Tube. Bull Moose Tube. Century Tube. CSI Tubular Products. Cyclops. Laclede Steel. LTV Tubular Products. Maruichi American. Sharon Tube. USX. Western Tube & Conduit. Wheatland Tube.
A–201–806	731–TA–547	Carbon Steel Wire Rope/Mexico	Bridon American. Macwhyte. Paulsen Wire Rope. The Rochester Corporation. United Automobile, Aerospace and Agricultural Implement Workers (Local 960). Williamsport. Wire-rope Works. Wire Rope Corporation of America.
A–201–809	731–TA–582	Cut-to-Length Carbon Steel Plate/Mexico	Bethlehem Steel.

Commerce case No.	Commission case No.	Product/country	Petitioners/supporters
A–201–817	731–TA–716	Oil Country Tubular Goods/Mexico	California Steel Industries. CitiSteel USA Inc. Geneva Steel. Gulf States Steel. Inland Steel Industries. Lukens Steel. National Steel. Nextech. Sharon Steel. Theis Precision Steel. Thompson Steel. US Steel. United Steelworkers of America. IPSCO. Koppel Steel. Maverick Tube. Newport Steel. North Star Steel. US Steel. USS/Kobe.
A–201–820	731–TA–747	Fresh Tomatoes/Mexico	Accomack County Farm Bureau. Ad Hoc Group of Florida, California, Georgia, Pennsylvania, South Carolina, Tennessee and Virginia Tomato Growers. Florida Farm Bureau Federation. Florida Fruit and Vegetable Association. Florida Tomato Exchange. Florida Tomato Growers Exchange. Gadsden County Tomato Growers Association. South Carolina Tomato Association.
A–201–822	731–TA–802	Stainless Steel Sheet and Strip/Mexico	Allegheny Ludlum. Armco. Bethlehem Steel. Carpenter Technology Corp. J&L Specialty Steel. North American Stainless. United Steelworkers of America.
A–201–827	731–TA–848	Large-Diameter Carbon Steel Seamless Pipe/Mexico.	North Star Steel. Timken. US Steel. United Steelworkers of America. USS/Kobe.
A–201–828	731–TA–920	Welded Large Diameter Line Pipe/Mexico	American Cast Iron Pipe. Berg Steel Pipe. Bethlehem Steel. Napa Pipe/Oregon Steel Mills. Saw Pipes USA. Stupp. US Steel.
A–201–830	731–TA–958	Carbon and Certain Alloy Steel Wire Rod/Mexico.	AmeriSteel. Birmingham Steel. Cascade Steel Rolling Mills. Connecticut Steel Corp. Co-Steel Raritan. GS Industries. Keystone Consolidated Industries. North Star Steel Texas. Nucor Steel-Nebraska (a division of Nucor Corp). Republic Technologies International. Rocky Mountain Steel Mills.
A–201–831	731–TA–1027	Prestressed Concrete Steel Wire Strand/Mexico.	American Spring Wire Corp. Insteel Wire Products Co. Sivaco Georgia LLC. Strand Tech Martin Inc. Sumiden Wire Products Corp.
A–201–834	731–TA–1085	Purified Carboxymethylcellulose/Mexico	Aqualon Co a Division of Hercules Inc.
A–274–804	731–TA–961	Carbon and Certain Alloy Steel Wire Rod/Trinidad &Tobago.	AmeriSteel. Birmingham Steel. Cascade Steel Rolling Mills. Connecticut Steel Corp. Co-Steel Raritan. GS Industries.

Commerce case No.	Commission case No.	Product/country	Petitioners/supporters
			Keystone Consolidated Industries. North Star Steel Texas. Nucor Steel-Nebraska (a division of Nucor Corp). Republic Technologies International. Rocky Mountain Steel Mills.
A–301–602	731–TA–329	Fresh Cut Flowers/Colombia	Burdette Coward. California Floral Council. Floral Trade Council. Florida Flower Association. Gold Coast Uanko Nursery. Hollandia Wholesale Florist. Manatee Fruit. Monterey Flower Farms. Pajaro Valley Greenhouses. Topstar Nursery.
A–307–803	731–TA–519	Gray Portland Cement and Clinker/Venezuela	Florida Crushed Stone. Southdown. Tarmac America.
A–307–805	731–TA–537	Circular Welded Nonalloy Steel Pipe/Venezuela.	Allied Tube & Conduit. American Tube. Bull Moose Tube. Century Tube. CSI Tubular Products. Cyclops. Laclede Steel. LTV Tubular Products. Maruichi American. Sharon Tube. USX. Western Tube & Conduit. Wheatland Tube.
A–307–807	731–TA–570	Ferrosilicon/Venezuela	AIMCOR. Alabama Silicon. American Alloys. Globe Metallurgical. Oil, Chemical and Atomic Workers (Local 389). Silicon Metaltech. United Autoworkers of America (Local 523). United Steelworkers of America (Locals 2528, 3081, 5171 and 12646).
A–307–820	731–TA–931	Silicomanganese/Venezuela	Eramet Marietta. Paper, Allied-Industrial, Chemical and Energy Workers International Union, Local 5–0639.
A–331–602	731–TA–331	Fresh Cut Flowers/Ecuador	Burdette Coward. California Floral Council. Floral Trade Council. Florida Flower Association. Gold Coast Uanko Nursery. Hollandia Wholesale Florist. Manatee Fruit. Monterey Flower Farms. Topstar Nursery.
A–337–803	731–TA–768	Fresh Atlantic Salmon/Chile	Atlantic Salmon of Maine. Cooke Aquaculture US. DE Salmon. Global Aqua USA. Island Aquaculture. Maine Coast Nordic. Scan Am Fish Farms. Treats Island Fisheries. Trumpet Island Salmon Farm.
A–337–804	731–TA–776	Preserved Mushrooms/Chile	LK Bowman. Modern Mushroom Farms. Monterey Mushrooms. Mount Laurel Canning. Mushroom Canning. Southwood Farms. Sunny Dell Foods. United Canning.
A–337–806	731–TA–948	Individually Quick Frozen Red Raspberries/Chile.	A&A Berry Farms. Bahler Farms. Bear Creek Farms.

Commerce case No.	Commission case No.	Product/country	Petitioners/supporters
			David Burns. Columbia Farms. Columbia Fruit. George Culp. Dobbins Berry Farm. Enfield. Firestone Packing. George Hoffman Farms. Heckel Farms. Wendell Kreder. Curt Maberry. Maberry Packing. Mike & Jean's. Nguyen Berry Farms. Nick's Acres. North Fork. Parson Berry Farm. Pickin 'N' Pluckin. Postage Stamp Farm. Rader. RainSweet. Scenic Fruit. Silverstar Farms. Tim Straub. Thoeny Farms. Townsend. Tsugawa Farms. Updike Berry Farms Van Laeken Farms.
A–351–503	731–TA–262	Iron Construction Castings/Brazil	Alhambra Foundry. Allegheny Foundry. Bingham & Taylor. Campbell Foundry. Charlotte Pipe & Foundry. Deeter Foundry. East Jordan Foundry. Le Baron Foundry. Municipal Castings. Neenah Foundry. Opelika Foundry. Pinkerton Foundry. Tyler Pipe. US Foundry & Manufacturing. Vulcan Foundry.
A–351–505	731–TA–278	Malleable Cast Iron Pipe Fittings/Brazil	Grinnell. Stanley G Flagg. Stockham Valves & Fittings. U-Brand. Ward Manufacturing.
A–351–602	731–TA–308	Carbon Steel Butt-Weld Pipe Fittings/Brazil	Ladish. Mills Iron Works. Steel Forgings. Tube Forgings of America. Weldbend.
A–351–603	731–TA–311	Brass Sheet and Strip/Brazil	Allied Industrial Workers of America. American Brass. Bridgeport Brass. Chase Brass & Copper. Hussey Copper. International Association of Machinists & Aerospace Workers. Mechanics Educational Society of America (Local 56). The Miller Company. Olin. Revere Copper Products. United Steelworkers of America.
A–351–605	731–TA–326	Frozen Concentrated Orange Juice/Brazil	Alcoma Packing. B&W Canning. Berry Citrus Products. Caulkins Indiantown Citrus. Citrus Belle. Citrus World. Florida Citrus Mutual.

Commerce case No.	Commission case No.	Product/country	Petitioners/supporters
A–351–804	731–TA–439	Industrial Nitrocellulose/Brazil	Hercules.
A–351–806	731–TA–471	Silicon Metal/Brazil	American Alloys. Globe Metallurgical. International Union of Electronics, Electrical, Machine and Furniture Workers (Local 693) Oil, Chemical and Atomic Workers (Local 389). Silicon Metaltech. SiMETCO. Textile Processors, Service Trades, Health Care Professional and Technical Employees (Local 60). United Steelworkers of America (Locals 5171, 8538 and 12646).
A–351–809.	731–TA–532	Circular Welded Nonalloy Steel Pipe/Brazil	Allied Tube & Conduit. American Tube. Bull Moose Tube. Century Tube. CSI Tubular Products. Cyclops. Laclede Steel. LTV Tubular Products. Maruichi American. Sharon Tube. USX. Western Tube & Conduit. Wheatland Tube.
A–351–817	731–TA–574	Cut-to-Length Carbon Steel Plate/Brazil	Bethlehem Steel. California Steel Industries. CitiSteel USA Inc. Geneva Steel. Gulf States Steel. Inland Steel Industries. Lukens Steel. National Steel. Nextech. Sharon Steel. Theis Precision Steel. Thompson Steel. US Steel. United Steelworkers of America.
A–351–819	731–TA–636	Stainless Steel Wire Rod/Brazil	AL Tech Specialty Steel. Armco Steel. Carpenter Technology. Republic Engineered Steels. Talley Metals Technology. United Steelworkers of America.
A–351–820	731–TA–641	Ferrosilicon/Brazil	AIMCOR. Alabama Silicon. American Alloys. Globe Metallurgical. Oil, Chemical and Atomic Workers (Local 389). Silicon Metaltech. United Autoworkers of America (Local 523). United Steelworkers of America (Locals 2528, 3081, 5171 and 12646).
A–351–824	731–TA–671	Silicomanganese/Brazil	Elkem Metals. Oil, Chemical and Atomic Workers (Local 3–639).
A–351–825	731–TA–678	Stainless Steel Bar/Brazil	AL Tech Specialty Steel. Carpenter Technology. Crucible Specialty Metals. Electralloy. Republic Engineered Steels. Slater Steels. Talley Metals Technology. United Steelworkers of America.
A–351–826	731–TA–708	Seamless Pipe/Brazil	Koppel Steel. Quanex. Timken. United States Steel.
A–351–828	731–TA–806	Hot-Rolled Carbon Steel Flat Products/Brazil	Acme Steel. Bethlehem Steel.

Commerce case No.	Commission case No.	Product/country	Petitioners/supporters
			California Steel Industries. Gallatin Steel. Geneva Steel. Gulf States Steel. Independent Steelworkers. IPSCO. Ispat/Inland. LTV Steel. National Steel. Nucor. Rouge Steel Co. Steel Dynamics. US Steel. United Steelworkers of America. WCI Steel. Weirton Steel. Wheeling-Pittsburgh Steel Corp.
A–351–832	731–TA–953	Carbon and Certain Alloy Steel Wire Rod/ Brazil.	AmeriSteel. Birmingham Steel. Cascade Steel Rolling Mills. Connecticut Steel Corp. Co-Steel Raritan. GS Industries. Keystone Consolidated Industries. North Star Steel Texas. Nucor Steel-Nebraska (a division of Nucor Corp). Republic Technologies International. Rocky Mountain Steel Mills.
A–351–837	731–TA–1024	Prestressed Concrete Steel Wire Strand/Brazil	American Spring Wire Corp. Insteel Wire Products Co. Sivaco Georgia LLC. Strand Tech Martin Inc Sumiden Wire Products Corp.
A–351–840	731–TA–1089	Certain Orange Juice/Brazil	A Duda & Sons Inc. Alico Inc. John Barnelt. Ben Hill Griffin Inc. Bliss Citrus. BTS A Florida General Partnership. Cain Groves. California Citrus Mutual. Cedar Haven Inc. Citrus World Inc. Clonts Groves Inc. Davis Enterprises Inc. D Edwards Dickinson. Evans Properties Inc. Florida Citrus Commission. Florida Citrus Mutual. Florida Farm Bureau Federation. Florida Fruit & Vegetable Association. Florida State of Department of Citrus. Flying V Inc. GBS Groves Inc. Graves Brothers Co. H&S Groves. Hartwell Groves Inc. Holly Hill Fruit Products Co. Jack Melton Family Inc. K-Bob Inc. L Dicks Inc. Lake Pickett Partnership Inc. Lamb Revocable Trust Gerilyn Rebecca S Lamb Trustee. Lykes Bros Inc. Martin J McKenna. Orange & Sons Inc. Osgood Groves. William W Parshall. PH Freeman & Sons. Pierie Grove. Raymond & Melissa Pierie. Roper Growers Cooperative.

Commerce case No.	Commission case No.	Product/country	Petitioners/supporters
			Royal Brothers Groves. Seminole Tribe of Florida Inc Silverman Groves/Rilla Cooper. Smoak Groves Inc. Sorrells Groves Inc. Southern Gardens Groves Corp. Southern Gardens Processing Corp. Southern Groves Citrus. Sun Ag Inc. Sunkist Growers Inc. Texas Citrus Exchange. Texas Citrus Mutual. Texas Produce Association. Travis Wise Management Inc. Uncle Matt's Fresh Inc. Varn Citrus Growers Inc.
A–357–007	731–TA–157	Carbon Steel Wire Rod/Argentina	Atlantic Steel. Continental Steel. Georgetown Steel. North Star Steel. Raritan River Steel.
A–357–405	731–TA–208	Barbed Wire and Barbless Wire Strand/Argentina.	CF&I Steel. Davis Walker. Forbes Steel & Wire. Oklahoma Steel Wire.
A–357–802	731–TA–409	Light-Walled Rectangular Tube/Argentina	Bull Moose Tube. Hannibal Industries. Harris Tube. Maruichi American. Searing Industries. Southwestern Pipe. Western Tube & Conduit.
A–357–804	731–TA–470	Silicon Metal/Argentina	American Alloys. Elkem Metals. Globe Metallurgical. International Union of Electronics, Electrical, Machine and Furniture Workers (Local 693). Oil, Chemical and Atomic Workers (Local 389). Silicon Metaltech SiMETCO. SKW Alloys. Textile Processors, Service Trades, Health Care Professional and Technical Employees (Local 60). United Steelworkers of America (Locals 5171, 8538 and 12646).
A–357–809	731–TA–707	Seamless Pipe/Argentina	Koppel Steel. Quanex. Timken. United States Steel.
A–357–810	731–TA–711	Oil Country Tubular Goods/Argentina	IPSCO. Koppel Steel. Lone Star Steel. Maverick Tube. Newport Steel. North Star Steel. US Steel. USS/Kobe.
A–357–812	731–TA–892	Honey/Argentina	AH Meyer & Sons. Adee Honey Farms. Althoff Apiaries. American Beekeeping Federation. American Honey Producers Association. Anderson Apiaries. Arroyo Apiaries. Artesian Honey Producers. B Weaver Apiaries. Bailey Enterprises. Barkman Honey. Basler Honey Apiary. Beals Honey. Bears Paw Apiaries. Beaverhead Honey.

Commerce case No.	Commission case No.	Product/country	Petitioners/supporters
			Bee Biz. Bee Haven Honey. Belliston Brothers Apiaries. Big Sky Honey. Bill Rhodes Honey. Richard E Blake. Curt Bronnenbery. Brown's Honey Farms. Brumley's Bees. Buhmann Apiaries. Carys Honey Farms. Chaparrel Honey. Charles Apiaries. Mitchell Charles. Collins Honey. Conor Apiaries. Coy's Honey Farm. Dave Nelson Apiaries. Delta Bee. Eisele's Pollination & Honey. Ellingsoa's. Elliott Curtis & Sons. Charles L Emmons, Sr. Gause Honey. Gene Brandi Apiaries. Griffith Honey. Haff Apiaries. Hamilton Bee Farms. Hamilton Honey. Happie Bee. Harvest Honey. Harvey's Honey. Hiatt Honey. Hoffman Honey. Hollman Apiaries. Honey House. Honeybee Apiaries. Gary M Honl. Rand William Honl and Sydney Jo Honl. James R & Joann Smith Trust. Jaynes Bee Products. Johnston Honey Farms. Larry Johnston. Ke-An Honey. Kent Honeybees. Lake-Indianhead Honey Farms. Lamb's Honey Farm. Las Flores Apiaries. Mackrill Honey Farms & Sales. Raymond Marquette. Mason & Sons Honey. McCoy's Sunny South Apiaries. Merrimack Valley Apiaries & Evergreen Honey. Met 2 Honey Farm. Missouri River Honey. Mitchell Brothers Honey. Monda Honey Farm. Montana Dakota Honey. Northern Bloom Honey. Noye's Apiaries. Oakes Honey. Oakley Honey Farms. Old Mill Apiaries. Opp Honey. Oro Dulce. Peterson's "Naturally Sweet" Honey. Potoczak Bee Farms. Price Apiaries. Pure Sweet Honey Farms. Robertson Pollination Service. Robson Honey. William Robson. Rosedale Apiaries.

Commerce case No.	Commission case No.	Product/country	Petitioners/supporters
			Ryan Apiaries. Schmidt Honey Farms. Simpson Apiaries. Sioux Honey Association. Smoot Honey. Solby Honey. Stahlman Apiaries. Steve E Parks Apiaries. Stroope Bee & Honey. T&D Honey Bee. Talbott's Honey. Terry Apiaries. Thompson Apiaries. Triple A Farm. Tropical Blossom Honey. Tubbs Apiaries. Venable Wholesale. Walter L Wilson Buzz 76 Apiaries. Wiebersiek Honey Farms. Wilmer Farms. Brent J Woodworth. Wooten's Golden Queens. Yaddof Apiaries.
A–357–814	731–TA–898	Hot-Rolled Steel Products/Argentina	Bethlehem Steel. Gallatin Steel. Independent Steelworkers. IPSCO. LTV Steel. National Steel. Nucor. Rouge Steel Co. Steel Dynamics. US Steel. United Steelworkers of America. WCI Steel Inc. Weirton Steel. Wheeling-Pittsburgh Steel Corp.
A–401–040	AA1921–114	Stainless Steel Plate/Sweden	Jessop Steel.
A–401–601	731–TA–316	Brass Sheet and Strip/Sweden	Allied Industrial Workers of America. American Brass. Bridgeport Brass. Chase Brass & Copper. Hussey Copper. International Association of Machinists & Aerospace Workers. Mechanics Educational Society of America (Local 56). The Miller Company. Olin. Revere Copper Products. United Steelworkers of America.
A–401–603	731–TA–354	Stainless Steel Hollow Products/Sweden	AL Tech Specialty Steel. Allegheny Ludlum Steel. ARMCO. Carpenter Technology. Crucible Materials. Damacus Tubular Products. Specialty Tubing Group.
A–401–801	731–TA–397–A	Ball Bearings/Sweden	Barden Corp. Emerson Power Transmission. Kubar Bearings. MPB. Rollway Bearings. Torrington.
A–401–801	731–TA–397–B	Cylindrical Roller Bearings/Sweden	Barden Corp. Emerson Power Transmission. MPB. Rollway Bearings. Torrington.
A–401–805	731–TA–586	Cut-to-Length Carbon Steel Plate/Sweden	Bethlehem Steel. California Steel Industries. CitiSteel USA Inc. Geneva Steel. Gulf States Steel.

Commerce case No.	Commission case No.	Product/country	Petitioners/supporters
			Inland Steel Industries. Lukens Steel. National Steel. Nextech. Sharon Steel. Theis Precision Steel. Thompson Steel. US Steel. United Steelworkers of America.
A–401–806	731–TA–774	Stainless Steel Wire Rod/Sweden	AL Tech Specialty Steel. Carpenter Technology. Republic Engineered Steels. Talley Metals Technology. United Steelworkers of America.
A–401–808	731–TA–1087	Purified Carboxymethylcellulose/Sweden	Aqualon Co a Division of Hercules Inc.
A–403–801	731–TA–454	Fresh and Chilled Atlantic Salmon/Norway	Heritage Salmon. The Coalition for Fair Atlantic Salmon Trade.
A–405–802	731–TA–576	Cut-to-Length Carbon Steel Plate/Finland	Bethlehem Steel. California Steel Industries. CitiSteel USA Inc. Geneva Steel. Gulf States Steel. Inland Steel Industries. Lukens Steel. National Steel. Nextech. Sharon Steel. Theis Precision Steel. Thompson Steel. US Steel. United Steelworkers of America.
A–405–803	731–TA–1084	Purified Carboxymethylcellulose/Finland	Aqualon Co a Division of Hercules Inc.
A–412–801	731–TA–399–A	Ball Bearings/United Kingdom	Barden Corp. Emerson Power Transmission. Kubar Bearings. McGill Manufacturing Co. MPB. Rexnord Inc. Rollway Bearings. Torrington.
A–412–801	731–TA–399–B	Cylindrical Roller Bearings/United Kingdom	Barden Corp. Emerson Power Transmission. MPB. Rollway Bearings. Torrington.
A–412–803	731–TA–443	Industrial Nitrocellulose/United Kingdom	Hercules.
A–412–805	731–TA–468	Sodium Thiosulfate/United Kingdom	Calabrian.
A–412–814	731–TA–587	Cut-to-Length Carbon Steel Plate/United Kingdom.	Bethlehem Steel. California Steel Industries. CitiSteel USA Inc. Geneva Steel. Gulf States Steel. Inland Steel Industries. Lukens Steel. National Steel. Nextech. Sharon Steel. Theis Precision Steel. Thompson Steel. US Steel. United Steelworkers of America.
A–412–818	731–TA–804	Stainless Steel Sheet and Strip/United Kingdom.	Allegheny Ludlum. Armco Steel. Bethlehem Steel. Butler Armco Independent Union. Carpenter Technology Corp. J&L Specialty Steel. North American Stainless. United Steelworkers of America. Zanesville Armco Independent Organization.
A–412–822	731–TA–918	Stainless Steel Bar/United Kingdom	Carpenter Technology. Crucible Specialty Metals. Electralloy. Empire Specialty Steel.

Commerce case No.	Commission case No.	Product/country	Petitioners/supporters
			Republic Technologies International.
			Slater Steels.
			United Steelworkers of America.
A–421–701	731–TA–380	Brass Sheet and Strip/Netherlands	Allied Industrial Workers of America.
			American Brass.
			Bridgeport Brass.
			Chase Brass & Copper.
			Hussey Copper.
			International Association of Machinists & Aerospace Workers.
			Mechanics Educational Society of America (Local 56).
			The Miller Company.
			North Coast Brass & Copper.
			Olin.
			Pegg Metals.
			Revere Copper Products.
			United Steelworkers of America.
A–421–804	731–TA–608	Cold-Rolled Carbon Steel Flat Products/Netherlands.	Armco Steel.
			Bethlehem Steel.
			California Steel Industries.
			Gulf States Steel.
			Inland Steel Industries.
			LTV Steel.
			National Steel.
			Nextech.
			Rouge Steel Co.
			Sharon Steel.
			Theis Precision Steel.
			Thompson Steel.
			US Steel.
			United Steelworkers of America.
			WCI Steel.
			Weirton Steel.
A–421–805	731–TA–652	Aramid Fiber/Netherlands	E I du Pont de Nemours.
A–421–807	731–TA–903	Hot-Rolled Steel Products/Netherlands	Bethlehem Steel.
			Gallatin Steel.
			Independent Steelworkers.
			IPSCO.
			LTV Steel.
			National Steel.
			Nucor.
			Rouge Steel Co.
			Steel Dynamics.
			US Steel.
			United Steelworkers of America.
			WCI Steel Inc.
			Weirton Steel.
			Wheeling-Pittsburgh Steel Corp.
A–421–811	731–TA–1086	Purified Carboxymethylcellulose/Netherlands	Aqualon Co a Division of Hercules Inc.
A–423–077	AA1921–198	Sugar/Belgium	Florida Sugar Marketing and Terminal Association.
A–423–602	731–TA–365	Industrial Phosphoric Acid/Belgium	Albright & Wilson.
			FMC.
			Hydrite Chemical.
			Monsanto.
			Stauffer Chemical.
A–423–805	731–TA–573	Cut-to-Length Carbon Steel Plate/Belgium	Bethlehem Steel.
			California Steel Industries.
			CitiSteel USA Inc.
			Geneva Steel.
			Gulf States Steel.
			Inland Steel Industries.
			Lukens Steel.
			National Steel.
			Nextech.
			Sharon Steel.
			Theis Precision Steel.
			Thompson Steel.
			US Steel.
			United Steelworkers of America.
A–423–808	731–TA–788	Stainless Steel Plate in Coils/Belgium	Allegheny Ludlum.
			Armco Steel.
			Lukens Steel.

Commerce case No.	Commission case No.	Product/country	Petitioners/supporters
			North American Stainless. United Steelworkers of America.
A–427–001	731–TA–44	Sorbitol/France	Lonza. Pfizer.
A–427–009	731–TA–96	Industrial Nitrocellulose/France	Hercules.
A–427–078	AA1921–199	Sugar/France	Florida Sugar Marketing and Terminal Association.
A–427–098	731–TA–25	Anhydrous Sodium Metasilicate/France	PQ.
A–427–602	731–TA–313	Brass Sheet and Strip/France	Allied Industrial Workers of America. American Brass. Bridgeport Brass. Chase Brass & Copper. Hussey Copper. International Association of Machinists & Aerospace Workers. Mechanics Educational Society of America (Local 56). The Miller Company. Olin. Revere Copper Products. United Steelworkers of America.
A–427–801	731–TA–392–A	Ball Bearings/France	Barden Corp. Emerson Power Transmission. Kubar Bearings. McGill Manufacturing Co. MPB. Rexnord Inc. Rollway Bearings. Torrington.
A–427–801	731–TA–392–B	Cylindrical Roller Bearings/France	Barden Corp. Emerson Power Transmission. MPB. Rollway Bearings. Torrington.
A–427–801	731–TA–392–C	Spherical Plain Bearings/France	Barden Corp. Emerson Power Transmission. Kubar Bearings. McGill Manufacturing Co. Rexnord Inc. Rollway Bearings. Torrington.
A–427–804	731–TA–553	Hot-Rolled Lead and Bismuth Carbon Steel Products/France.	Bethlehem Steel. Inland Steel Industries. USS/Kobe Steel.
A–427–808	731–TA–615	Corrosion-Resistant Carbon Steel Flat Products/France.	Armco Steel. Bethlehem Steel. California Steel Industries. Geneva Steel. Gulf States Steel. Inland Steel Industries. LTV Steel. Lukens Steel. National Steel. Nextech. Rouge Steel Co. Sharon Steel. Theis Precision Steel. Thompson Steel. US Steel. United Steelworkers of America. WCI Steel. Weirton Steel.
A–427–811	731–TA–637	Stainless Steel Wire Rod/France	AL Tech Specialty Steel. Armco Steel. Carpenter Technology. Republic Engineered Steels. Talley Metals Technology. United Steelworkers of America.
A–427–814	731–TA–797	Stainless Steel Sheet and Strip/France	Allegheny Ludlum. Armco Steel. Bethlehem Steel. Butler Armco Independent Union. Carpenter Technology Corp. North American Stainless.

Commerce case No.	Commission case No.	Product/country	Petitioners/supporters
			United Steelworkers of America.
			Zanesville Armco Independent Organization.
A–427–816	731–TA–816	Cut-to-Length Carbon Steel Plate/France	Bethlehem Steel.
			Geneva Steel.
			IPSCO Steel.
			National Steel.
			US Steel.
			United Steelworkers of America.
A–427–818	731–TA–909	Low Enriched Uranium/France	United States Enrichment Corp.
			USEC Inc.
A–427–820	731–TA–913	Stainless Steel Bar/France	Carpenter Technology.
			Crucible Specialty Metals.
			Electralloy.
			Empire Specialty Steel.
			Republic Technologies International.
			Slater Steels.
			United Steelworkers of America.
A–428–082	AA1921–200	Sugar/Germany	Florida Sugar Marketing and Terminal Association.
A–428–602	731–TA–317	Brass Sheet and Strip/Germany	Allied Industrial Workers of America.
			American Brass.
			Bridgeport Brass.
			Chase Brass & Copper.
			Hussey Copper.
			International Association of Machinists & Aerospace Workers.
			Mechanics Educational Society of America (Local 56).
			The Miller Company.
			Olin.
			Revere Copper Products.
			United Steelworkers of America.
A–428–801	731–TA–391–A	Ball Bearings/Germany	Barden Corp.
			Emerson Power Transmission.
			Kubar Bearings.
			McGill Manufacturing Co.
			MPB.
			Rexnord Inc.
			Rollway Bearings.
			Torrington.
A–428–801	731–TA–391–B	Cylindrical Roller Bearings/Germany	Barden Corp.
			Emerson Power Transmission.
			MPB.
			Rollway Bearings.
			Torrington.
A–428–801	731–TA–391–C	Spherical Plain Bearings/Germany	Barden Corp.
			Emerson Power Transmission.
			Rollway Bearings.
			Torrington.
A–428–802	731–TA–419	Industrial Belts/Germany	The Gates Rubber Company.
			The Goodyear Tire and Rubber Company.
A–428–803	731–TA–444	Industrial Nitrocellulose/Germany	Hercules.
A–428–807	731–TA–465	Sodium Thiosulfate/Germany	Calabrian.
A–428–814	731–TA–604	Cold-Rolled Carbon Steel Flat Products/Germany.	Armco Steel.
			Bethlehem Steel.
			California Steel Industries.
			Gulf States Steel.
			Inland Steel Industries.
			LTV Steel.
			National Steel.
			Nextech.
			Rouge Steel Co.
			Sharon Steel.
			Theis Precision Steel.
			Thompson Steel.
			US Steel.
			United Steelworkers of America.
			WCI Steel.
			Weirton Steel.
A–428–815	731–TA–616	Corrosion-Resistant Carbon Steel Flat Products/Germany..	Armco Steel.
			Bethlehem Steel.
			California Steel Industries.
			Geneva Steel.
			Gulf States Steel.

Commerce case No.	Commission case No.	Product/country	Petitioners/supporters
			Inland Steel Industries.
			LTV Steel.
			Lukens Steel.
			National Steel.
			Nextech.
			Rouge Steel Co.
			Sharon Steel.
			Theis Precision Steel.
			Thompson Steel.
			US Steel.
			United Steelworkers of America.
			WCI Steel.
			Weirton Steel.
A–428–816	731–TA–578	Cut-to-Length Carbon Steel Plate/Germany	Bethlehem Steel.
			California Steel Industries.
			CitiSteel USA Inc.
			Geneva Steel.
			Gulf States Steel.
			Inland Steel Industries.
			Lukens Steel.
			National Steel.
			Nextech.
			Sharon Steel.
			Theis Precision Steel.
			Thompson Steel.
			US Steel.
			United Steelworkers of America.
A–428–820	731–TA–709	Seamless Pipe/Germany	Koppel Steel.
			Quanex.
			Timken.
			United States Steel.
A–428–821	731–TA–736	Large Newspaper Printing Presses/Germany	Rockwell Graphics Systems.
A–428–825	731–TA–798	Stainless Steel Sheet and Strip/Germany	Allegheny Ludlum.
			Armco Steel.
			Bethlehem Steel.
			Butler Armco Independent Union.
			Carpenter Technology Corp.
			J&L Specialty Steel.
			North American Stainless.
			United Steelworkers of America.
			Zanesville Armco Independent Organization.
A–428–830	731–TA–914	Stainless Steel Bar/Germany	Carpenter Technology.
			Crucible Specialty Metals.
			Electralloy.
			Empire Specialty Steel.
			Republic Technologies International.
			Slater Steels.
			United Steelworkers of America.
A–437–601	731–TA–341	Tapered Roller Bearings/Hungary	L&S Bearing.
			Timken.
			Torrington.
A–437–804	731–TA–426	Sulfanilic Acid/Hungary	Nation Ford Chemical.
A–447–801	731–TA–340C	Solid Urea/Estonia	Agrico Chemical.
			American Cyanamid.
			CF Industries.
			First Mississippi.
			Mississippi Chemical.
			Terra International.
			WR Grace.
A–449–804	731–TA–878	Steel Concrete Reinforcing Bar/Latvia	AB Steel Mill Inc.
			AmeriSteel.
			Auburn Steel.
			Birmingham Steel.
			Border Steel.
			Cascade Steel Rolling Mills Inc.
			CMC Steel Group.
			Co-Steel Inc.
			Marion Steel.
			North Star Steel Co.
			Nucor Steel.
			Rebar Trade Action Coalition.
			Riverview Steel.
			Sheffield Steel.
			TAMCO.

Commerce case No.	Commission case No.	Product/country	Petitioners/supporters
			TXI-Chaparral Steel Co.
A–451–801	731–TA–340D	Solid Urea/Lithuania	Agrico Chemical.
			American Cyanamid.
			CF Industries.
			First Mississippi.
			Mississippi Chemical.
			Terra International.
			WR Grace.
A–455–802	731–TA–583	Cut-to-Length Carbon Steel Plate/Poland	Bethlehem Steel.
			California Steel Industries.
			CitiSteel USA Inc.
			Geneva Steel.
			Gulf States Steel.
			Inland Steel Industries.
			Lukens Steel.
			National Steel.
			Nextech.
			Sharon Steel.
			Theis Precision Steel.
			Thompson Steel.
			US Steel.
			United Steelworkers of America.
A–455–803	731–TA–880	Steel Concrete Reinforcing Bar/Poland	AB Steel Mill Inc.
			AmeriSteel.
			Auburn Steel.
			Birmingham Steel.
			Border Steel.
			Cascade Steel Rolling Mills Inc.
			CMC Steel Group.
			Co-Steel Inc.
			Marion Steel.
			North Star Steel Co.
			Nucor Steel.
			Rebar Trade Action Coalition.
			Riverview Steel.
			Sheffield Steel.
			TAMCO.
			TXI-Chaparral Steel Co.
A–469–007	731–TA–126	Potassium Permanganate/Spain	Carus Chemical.
A–469–803	731–TA–585	Cut-to-Length Carbon Steel Plate/Spain	Bethlehem Steel.
			California Steel Industries.
			Geneva Steel.
			Gulf States Steel.
			Inland Steel Industries.
			Lukens Steel.
			National Steel.
			Nextech.
			Sharon Steel.
			Theis Precision Steel.
			Thompson Steel.
			US Steel.
			United Steelworkers of America.
A–469–805	731–TA–682	Stainless Steel Bar/Spain	AL Tech Specialty Steel.
			Carpenter Technology.
			Crucible Specialty Metals.
			Electralloy.
			Republic Engineered Steels.
			Slater Steels.
			Talley Metals Technology.
			United Steelworkers of America.
A–469–807	731–TA–773	Stainless Steel Wire Rod/Spain	AL Tech Specialty Steel.
			Carpenter Technology.
			Republic Engineered Steels.
			Talley Metals Technology.
			United Steelworkers of America.
A–469–810	731–TA–890	Stainless Steel Angle/Spain	Slater Steels.
			United Steelworkers of America.
A–469–814	731–TA–1083	Chlorinated Isocyanurates/Spain	BioLab Inc.
			Clearon Corp.
			Occidental Chemical Corp.
A–471–806	731–TA–427	Sulfanilic Acid/Portugal	Nation Ford Chemical.
A–475–059	AA1921–167	Pressure-Sensitive Plastic Tape/Italy	Minnesota Mining & Manufacturing.
A–475–601	731–TA–314	Brass Sheet and Strip/Italy	Allied Industrial Workers of America.
			American Brass.

Commerce case No.	Commission case No.	Product/country	Petitioners/supporters
			Bridgeport Brass. Chase Brass & Copper. Hussey Copper. International Association of Machinists & Aerospace Workers. Mechanics Educational Society of America (Local 56). The Miller Company. Olin. Revere Copper Products. United Steelworkers of America.
A–475–703	731–TA–385	Granular Polytetrafluoroethylene/Italy	E I du Pont de Nemours. ICI Americas.
A–475–801	731–TA–393–A	Ball Bearings/Italy	Barden Corp. Emerson Power Transmission. Kubar Bearings. McGill Manufacturing Co. MPB. Rexnord Inc. Rollway Bearings. Torrington.
A–475–801	731–TA–393–B	Cylindrical Roller Bearings/Italy	Barden Corp. Emerson Power Transmission. MPB. Rollway Bearings. Torrington.
A–475–802	731–TA–413	Industrial Belts/Italy	The Gates Rubber Company. The Goodyear Tire and Rubber Company.
A–475–811	731–TA–659	Grain-Oriented Silicon Electrical Steel/Italy	Allegheny Ludlum. Armco Steel. Butler Armco Independent Union. United Steelworkers of America. Zanesville Armco Independent Union.
A–475–814	731–TA–710	Seamless Pipe/Italy	Koppel Steel. Quanex. Timken. United States Steel.
A–475–816	731–TA–713	Oil Country Tubular Goods/Italy	Bellville Tube. IPSCO. Koppel Steel. Lone Star Steel. Maverick Tube. Newport Steel. North Star Steel. US Steel. USS/Kobe.
A–475–818	731–TA–734	Pasta/Italy	A Zerega's Sons. American Italian Pasta. Borden. D Merlino & Sons. Dakota Growers Pasta. Foulds. Gilster-Mary Lee. Gooch Foods. Hershey Foods. LaRinascente Macaroni Co. Pasta USA. Philadelphia Macaroni. ST Specialty Foods.
A–475–820	731–TA–770	Stainless Steel Wire Rod/Italy	AL Tech Specialty Steel. Carpenter Technology. Republic Engineered Steels. Talley Metals Technology. United Steelworkers of America.
A–475–822	731–TA–790	Stainless Steel Plate in Coils/Italy	Allegheny Ludlum. Armco Steel. J&L Specialty Steel. Lukens Steel. North American Stainless. United Steelworkers of America.
A–475–824	731–TA–799	Stainless Steel Sheet and Strip/Italy	Allegheny Ludlum. Armco Steel. Bethlehem Steel. Butler Armco Independent Union.

Commerce case No.	Commission case No.	Product/country	Petitioners/supporters
A–475–826	731–TA–819	Cut-to-Length Carbon Steel Plate/Italy	Carpenter Technology Corp. J&L Specialty Steel. North American Stainless. United Steelworkers of America. Zanesville Armco Independent Organization.
A–475–828	731–TA–865	Stainless Steel Butt-Weld Pipe Fittings/Italy	Bethlehem Steel. CitiSteel USA Inc. Geneva Steel. Gulf States Steel. IPSCO Steel. National Steel. US Steel. United Steelworkers of America.
A–475–829	731–TA–915	Stainless Steel Bar/Italy	Flo-Mac Inc. Gerlin. Markovitz Enterprises. Shaw Alloy Piping Products. Taylor Forge Stainless.
A–479–801	731–TA–445	Industrial Nitrocellulose/Yugoslavia	Carpenter Technology. Crucible Specialty Metals. Electralloy. Empire Specialty Steel. Republic Technologies International. Slater Steels. United Steelworkers of America.
A–484–801	731–TA–406	Electrolytic Manganese Dioxide/Greece	Hercules.
A–485–601	731–TA–339	Solid Urea/Romania	Chemetals. Kerr-McGee. Rayovac.
A–485–602	731–TA–345	Tapered Roller Bearings/Romania	Agrico Chemical. American Cyanamid. CF Industries. First Mississippi. Mississippi Chemical. Terra International. WR Grace.
A–485–801	731–TA–395	Ball Bearings/Romania	L&S Bearing. Timken. Torrington.
A–485–803	731–TA–584	Cut-to-Length Carbon Steel Plate/Romania	Barden Corp. Emerson Power Transmission. Kubar Bearings. MPB. Rollway Bearings. Torrington.
A–485–805	731–TA–849	Small-Diameter Carbon Steel Seamless Pipe/Romania.	Bethlehem Steel. California Steel Industries. CitiSteel USA Inc. Geneva Steel. Gulf States Steel. Inland Steel Industries. Lukens Steel. National Steel. Nextech. Sharon Steel. Theis Precision Steel. Thompson Steel. US Steel. United Steelworkers of America.
A–485–806	731–TA–904	Hot-Rolled Steel Products/Romania	Koppel Steel. North Star Steel. Sharon Tube. Timken. US Steel. United Steelworkers of America. USS/Kobe. Vision Metals' Gulf States Tube.
			Bethlehem Steel. Gallatin Steel. Independent Steelworkers. IPSCO. LTV Steel. National Steel. Nucor.

Commerce case No.	Commission case No.	Product/country	Petitioners/supporters
			Rouge Steel Co. Steel Dynamics. US Steel. United Steelworkers of America. WCI Steel Inc. Weirton Steel. Wheeling-Pittsburgh Steel Corp.
A–489–501	731–TA–273	Welded Carbon Steel Pipe and Tube/Turkey	Allied Tube & Conduit. American Tube. Bernard Epps. Bock Industries. Bull Moose Tube. Central Steel Tube. Century Tube. Copperweld Tubing. Cyclops. Hughes Steel & Tube. Kaiser Steel. Laclede Steel. Maruichi American. Maverick Tube. Merchant Metals. Phoenix Steel. Pittsburgh Tube. Quanex. Sharon Tube. Southwestern Pipe. UNR-Leavitt. Welded Tube. Western Tube & Conduit. Wheatland Tube.
A–489–602	731–TA–364	Aspirin/Turkey	Dow Chemical. Monsanto. Norwich-Eaton.
A–489–805	731–TA–735	Pasta/Turkey	A Zerega's Sons. American Italian Pasta. Borden. D Merlino & Sons. Dakota Growers Pasta. Foulds. Gilster-Mary Lee. Gooch Foods. Hershey Foods. LaRinascente Macaroni Co. Pasta USA. Philadelphia Macaroni. ST Specialty Foods.
A–489–807	731–TA–745	Steel Concrete Reinforcing Bar/Turkey	AmeriSteel. Auburn Steel. Birmingham Steel. Commercial Metals. Marion Steel. New Jersey Steel.
A–507–502	731–TA–287	Raw In-Shell Pistachios/Iran	Blackwell Land. California Pistachio Orchard. Keenan Farms. Kern Pistachio Hulling & Drying. Los Ranchos de Poco Pedro. Pistachio Producers of California. TM Duche Nut.
A–508–604	731–TA–366	Industrial Phosphoric Acid/Israel	Albright & Wilson. FMC. Hydrite Chemical. Monsanto. Stauffer Chemical.
A–533–502	731–TA–271	Welded Carbon Steel Pipe and Tube/India	Allied Tube & Conduit. American Tube. Bernard Epps. Bock Industries. Bull Moose Tube. Central Steel Tube. Century Tube. Copperweld Tubing. Cyclops.

Commerce case No.	Commission case No.	Product/country	Petitioners/supporters
			Hughes Steel & Tube. Kaiser Steel. Laclede Steel. Maruichi American. Maverick Tube. Merchant Metals. Phoenix Steel. Pittsburgh Tube. Quanex. Sharon Tube. Southwestern Pipe. UNR-Leavitt. Welded Tube. Western Tube & Conduit. Wheatland Tube.
A–533–806	731–TA–561	Sulfanilic Acid/India	R–M Industries.
A–533–808	731–TA–638	Stainless Steel Wire Rod/India	AL Tech Specialty Steel. Armco Steel. Carpenter Technology. Republic Engineered Steels. Talley Metals Technology. United Steelworkers of America.
A–533–809	731–TA–639	Forged Stainless Steel Flanges/India	Gerlin. Ideal Forging. Maass Flange. Markovitz Enterprises.
A–533–810	731–TA–679	Stainless Steel Bar/India	AL Tech Specialty Steel. Carpenter Technology. Crucible Specialty Metals. Electralloy. Republic Engineered Steels. Slater Steels. Talley Metals Technology. United Steelworkers of America.
A–533–813	731–TA–778	Preserved Mushrooms/India	LK Bowman. Modern Mushroom Farms. Monterey Mushrooms. Mount Laurel Canning. Mushroom Canning. Southwood Farms. Sunny Dell Foods. United Canning.
A–533–817	731–TA–817	Cut-to-Length Carbon Steel Plate/India	Bethlehem Steel. CitiSteel USA Inc. Geneva Steel. Gulf States Steel. IPSCO Steel. National Steel. Tuscaloosa Steel. US Steel. United Steelworkers of America.
A–533–820	731–TA–900	Hot-Rolled Steel Products/India	Bethlehem Steel. Gallatin Steel. Independent Steelworkers. IPSCO. LTV Steel. National Steel. Nucor. Rouge Steel Co. Steel Dynamics. US Steel. United Steelworkers of America. WCI Steel Inc. Weirton Steel. Wheeling-Pittsburgh Steel Corp.
A–533–823	731–TA–929	Silicomanganese/India	Eramet Marietta. Paper, Allied-Industrial, Chemical and Energy Workers International Union, Local 5–0639.
A–533–824	731–TA–933	Polyethylene Terephthalate Film, Sheet and Strip (PET Film)/India.	DuPont Teijin Films. Mitsubishi Polyester Film LLC. SKC America Inc. Toray Plastics (America).
A–533–828	731–TA–1025	Prestressed Concrete Steel Wire Strand/India	American Spring Wire Corp. Insteel Wire Products Co.

Commerce case No.	Commission case No.	Product/country	Petitioners/supporters
			Sivaco Georgia LLC.
			Strand Tech Martin Inc.
			Sumiden Wire Products Corp.
A–533–838	731–TA–1061	Carbazole Violet Pigment 23/India	Allegheny Color Corp.
			Barker Fine Color Inc.
			Clariant Corp.
			Nation Ford Chemical Co.
			Sun Chemical Co.
A–533–843	731–TA–1096	Certain Lined Paper School Supplies/India	Fay Paper Products Inc.
			MeadWestvaco Consumer & Office Products.
			Norcom Inc.
			Pacon Corp.
			Roaring Spring Blank Book Co.
			Top Flight Inc.
			United Steel, Paper and Forestry, Rubber, Manufacturing, Energy, Allied Industrial and Service Workers International Union, AFL–CIO–CLC (USW).
A–538–802	731–TA–514	Cotton Shop Towels/Bangladesh	Milliken.
A–549–502	731–TA–252	Welded Carbon Steel Pipe and Tube/Thailand	Allied Tube & Conduit.
			American Tube.
			Bernard Epps.
			Bock Industries.
			Bull Moose Tube.
			Central Steel Tube.
			Century Tube.
			Copperweld Tubing.
			Cyclops.
			Hughes Steel & Tube.
			Kaiser Steel.
			Laclede Steel.
			Maruichi American.
			Maverick Tube.
			Merchant Metals.
			Phoenix Steel.
			Pittsburgh Tube.
			Quanex.
			Sharon Tube.
			Southwestern Pipe.
			UNR-Leavitt.
			Welded Tube.
			Western Tube & Conduit.
			Wheatland Tube.
A–549–601	731–TA–348	Malleable Cast Iron Pipe Fittings/Thailand	Grinnell.
			Stanley G Flagg.
			Stockham Valves & Fittings.
			U-Brand.
			Ward Manufacturing.
A–549–807	731–TA–521	Carbon Steel Butt-Weld Pipe Fittings/Thailand	Hackney.
			Ladish.
			Mills Iron Works.
			Steel Forgings.
			Tube Forgings of America.
A–549–812	731–TA–705	Furfuryl Alcohol/Thailand	QO Chemicals.
A–549–813	731–TA–706	Canned Pineapple/Thailand	International Longshoreman's and Warehouseman's Union.
			Maui Pineapple.
A–549–817	731–TA–907	Hot-Rolled Steel Products/Thailand	Bethlehem Steel.
			Gallatin Steel.
			Independent Steelworkers.
			IPSCO.
			LTV Steel.
			National Steel.
			Nucor.
			Rouge Steel Co.
			Steel Dynamics.
			US Steel.
			United Steelworkers of America.
			WCI Steel Inc.
			Weirton Steel.
			Wheeling-Pittsburgh Steel Corp.
A–549–820	731–TA–1028	Prestressed Concrete Steel Wire Strand/Thailand.	American Spring Wire Corp.
			Insteel Wire Products Co.
			Sivaco Georgia LLC.

Commerce case No.	Commission case No.	Product/country	Petitioners/supporters
			Strand Tech Martin Inc. Sumiden Wire Products Corp.
A–549–821	731–TA–1045	Polyethylene Retail Carrier Bags/Thailand	Aargus Plastics Inc. Advance Polybags Inc. Advance Polybags (Nevada) Inc. Advance Polybags (Northeast) Inc. Alpha Industries Inc. Alpine Plastics Inc. Ampac Packaging LLC. API Enterprises Inc. Command Packaging. Continental Poly Bags Inc. Durabag Co Inc. Europackaging LLC. Genpak LLC (formerly Continental Superbag LLC). Genpak LLC (formerly Strout Plastics). Hilex Poly Co LLC. Inteplast Group Ltd. PCL Packaging Inc. Poly-Pak Industries Inc. Roplast Industries Inc. Superbag Corp. Unistar Plastics LLC. Vanguard Plastics Inc. VS Plastics LLC.
A–552–801	731–TA–1012	Certain Frozen Fish Fillets/Vietnam	America's Catch Inc. Aquafarms Catfish Inc. Carolina Classics Catfish Inc. Catfish Farmers of America. Consolidated Catfish Companies Inc. Delta Pride Catfish Inc. Fish Processors Inc. Guidry's Catfish Inc. Haring's Pride Catfish. Harvest Select Catfish (Alabama Catfish Inc). Heartland Catfish Co (TT&W Farm Products Inc). Prairie Lands Seafood (Illinois Fish Farmers Cooperative). Pride of the Pond. Pride of the South Catfish Inc. Prime Line Inc. Seabrook Seafood Inc. Seacat (Arkansas Catfish Growers). Simmons Farm Raised Catfish Inc. Southern Pride Catfish LLC. Verret Fisheries Inc.
A–557–805	731–TA–527	Extruded Rubber Thread/Malaysia	Globe Manufacturing. North American Rubber Thread.
A–557–809	731–TA–866	Stainless Steel Butt-Weld Pipe Fittings/Malaysia.	Flo-Mac Inc. Gerlin. Markovitz Enterprises. Shaw Alloy Piping Products. Taylor Forge Stainless.
A–557–813	731–TA–1044	Polyethylene Retail Carrier Bags/Malaysia	Aargus Plastics Inc. Advance Polybags Inc. Advance Polybags (Nevada) Inc. Advance Polybags (Northeast) Inc. Alpha Industries Inc. Alpine Plastics Inc. Ampac Packaging LLC. API Enterprises Inc. Command Packaging. Continental Poly Bags Inc. Durabag Co Inc. Europackaging LLC. Genpak LLC (formerly Continental Superbag LLC). Genpak LLC (formerly Strout Plastics). Hilex Poly Co LLC. Inteplast Group Ltd. PCL Packaging Inc. Poly-Pak Industries Inc.

Commerce case No.	Commission case No.	Product/country	Petitioners/supporters
			Roplast Industries Inc. Superbag Corp. Unistar Plastics LLC. Vanguard Plastics Inc. VS Plastics LLC.
A–559–502	731–TA–296	Small Diameter Standard and Rectangular Pipe and Tube/Singapore.	Allied Tube & Conduit. American Tube. Bull Moose Tube. Cyclops. Hannibal Industries. Laclede Steel. Pittsburgh Tube. Sharon Tube. Western Tube & Conduit. Wheatland Tube.
A–559–601	731–TA–370	Color Picture Tubes/Singapore	Industrial Union Department, AFL–CIO. International Association of Machinists & Aerospace Workers. International Brotherhood of Electrical Workers. International Union of Electronic, Electrical, Technical, Salaried and Machine Workers. Philips Electronic Components Group. United Steelworkers of America. Zenith Electronics.
A–559–801	731–TA–396	Ball Bearings/Singapore	Barden Corp. Emerson Power Transmission. Kubar Bearings. McGill Manufacturing Co. MPB. Rexnord Inc. Rollway Bearings. Torrington.
A–559–802	731–TA–415	Industrial Belts/Singapore	The Gates Rubber Company. The Goodyear Tire and Rubber Company.
A–560–801	731–TA–742	Melamine Institutional Dinnerware/Indonesia	Carlisle Food Service Products. Lexington United. Plastics Manufacturing.
A–560–802	731–TA–779	Preserved Mushrooms/Indonesia	LK Bowman. Modern Mushroom Farms. Monterey Mushrooms. Mount Laurel Canning. Mushroom Canning. Southwood Farms. Sunny Dell Foods. United Canning.
A–560–803	731–TA–787	Extruded Rubber Thread/Indonesia	North American Rubber Thread.
A–560–805	731–TA–818	Cut-to-Length Carbon Steel Plate/Indonesia	Bethlehem Steel. CitiSteel USA Inc. Geneva Steel. Gulf States Steel. IPSCO Steel. National Steel. Tuscaloosa Steel. US Steel. United Steelworkers of America.
A–560–811	731–TA–875	Steel Concrete Reinforcing Bar/Indonesia	AB Steel Mill Inc. AmeriSteel. Birmingham Steel. Border Steel. Cascade Steel Rolling Mills Inc. CMC Steel Group. Co-Steel Inc. Marion Steel. North Star Steel Co. Nucor Steel. Rebar Trade Action Coalition. Riverview Steel. Sheffield Steel. TAMCO. TXI-Chaparral Steel Co.
A–560–812	731–TA–901	Hot-Rolled Steel Products/Indonesia	Bethlehem Steel. Gallatin Steel. Independent Steelworkers.

Commerce case No.	Commission case No.	Product/country	Petitioners/supporters
			IPSCO. LTV Steel. National Steel. Nucor. Rouge Steel Co. Steel Dynamics. US Steel. United Steelworkers of America. WCI Steel Inc. Weirton Steel. Wheeling-Pittsburgh Steel Corp.
A–560–815	731–TA–957	Carbon and Certain Alloy Steel Wire Rod/Indonesia.	AmeriSteel. Birmingham Steel. Cascade Steel Rolling Mills. Connecticut Steel Corp. Co-Steel Raritan. GS Industries. Keystone Consolidated Industries. North Star Steel Texas. Nucor Steel-Nebraska (a division of Nucor Corp). Republic Technologies International. Rocky Mountain Steel Mills.
A–560–818	731–TA–1097	Certain Lined Paper School Supplies/Indonesia.	Fay Paper Products Inc. MeadWestvaco Consumer & Office Products. Norcom Inc. Pacon Corp. Roaring Spring Blank Book Co. Top Flight Inc. United Steel, Paper and Forestry, Rubber, Manufacturing, Energy, Allied Industrial and Service Workers International Union, AFL–CIO–CLC (USW).
A–565–801	731–TA–867	Stainless Steel Butt-Weld Pipe Fittings/Philippines.	Flo-Mac Inc. Gerlin. Markovitz Enterprises. Shaw Alloy Piping Products. Taylor Forge Stainless.
A–570–001	731–TA–125	Potassium Permanganate/China	Carus Chemical.
A–570–002	731–TA–130	Chloropicrin/China	LCP Chemicals & Plastics. Niklor Chemical.
A–570–003	731–TA–103	Cotton Shop Towels/China	Milliken. Texel Industries. Wikit.
A–570–007	731–TA–149	Barium Chloride/China	Chemical Products.
A–570–101	731–TA–101	Greige Polyester Cotton Printcloth/China	Alice Manufacturing. Clinton Mills. Dan River. Greenwood Mills. Hamrick Mills. M Lowenstein. Mayfair Mills. Mount Vernon Mills.
A–570–501	731–TA–244	Natural Bristle Paint Brushes/China	Baltimore Brush. Bestt Liebco. Elder & Jenks. EZ Paintr. H&G Industries. Joseph Lieberman & Sons. Purdy. Rubberset. Thomas Paint Applicators. Wooster Brush.
A–570–502	731–TA–265	Iron Construction Castings/China	Alhambra Foundry. Allegheny Foundry. Bingham & Taylor. Campbell Foundry. Charlotte Pipe & Foundry. Deeter Foundry. East Jordan Foundry. Le Baron Foundry. Municipal Castings. Neenah Foundry. Opelika Foundry.

Commerce case No.	Commission case No.	Product/country	Petitioners/supporters
			Pinkerton Foundry.
			Tyler Pipe.
			US Foundry & Manufacturing.
			Vulcan Foundry.
A–570–504	731–TA–282	Petroleum Wax Candles/China	The Al Root Company.
			Candle Artisans Inc.
			Candle-Lite.
			Cathedral Candle.
			Colonial Candle of Cape Cod.
			General Wax & Candle.
			Lenox Candles.
			Lumi-Lite Candle.
			Meuch-Kreuzer Candle.
			National Candle Association.
			Will & Baumer.
			WNS.
A–570–506	731–TA–298	Porcelain-on-Steel Cooking Ware/China	General Housewares.
A–570–601	731–TA–344	Tapered Roller Bearings/China	L&S Bearing.
			Timken.
			Torrington.
A–570–802	731–TA–441	Industrial Nitrocellulose/China	Hercules.
A–570–803	731–TA–457–A	Axes and Adzes/China	Council Tool Co Inc.
			Warwood Tool.
			Woodings-Verona.
A–570–803	731–TA–457–B	Bars and Wedges/China	Council Tool Co Inc.
			Warwood Tool.
			Woodings-Verona.
A–570–803	731–TA–457–C	Hammers and Sledges/China	Council Tool Co Inc.
			Warwood Tool.
			Woodings-Verona.
A–570–803	731–TA–457–D	Picks and Mattocks/China	Council Tool Co Inc.
			Warwood Tool.
			Woodings-Verona.
A–570–804	731–TA–464	Sparklers/China	BJ Alan.
			Diamond Sparkler.
			Elkton Sparkler.
A–570–805	731–TA–466	Sodium Thiosulfate/China	Calabrian.
A–570–806	731–TA–472	Silicon Metal/China	American Alloys.
			Elkem Metals.
			Globe Metallurgical.
			International Union of Electronics, Electrical, Machine and Furniture Workers (Local 693).
			Oil, Chemical and Atomic Workers (Local 389).
			Silicon Metaltech.
			SiMETCO.
			SKW Alloys.
			Textile Processors, Service Trades, Health Care.
			Professional and Technical Employees (Local 60).
			United Steelworkers of America (Locals 5171, 8538 and 12646).
A–570–808	731–TA–474	Chrome-Plated Lug Nuts/China	Consolidated International Automotive.
			Key Manufacturing.
			McGard.
A–570–811	731–TA–497	Tungsten Ore Concentrates/China	Curtis Tungsten.
			US Tungsten.
A–570–814	731–TA–520	Carbon Steel Butt-Weld Pipe Fittings/China	Hackney.
			Ladish.
			Mills Iron Works.
			Steel Forgings.
			Tube Forgings of America.
A–570–815	731–TA–538	Sulfanilic Acid/China	R–M Industries.
A–570–819	731–TA–567	Ferrosilicon/China	AIMCOR.
			Alabama Silicon.
			American Alloys.
			Globe Metallurgical.
			Oil, Chemical and Atomic Workers (Local 389).
			Silicon Metaltech.
			United Autoworkers of America (Local 523).
			United Steelworkers of America (Locals 2528, 3081, 5171 and 12646).

Commerce case No.	Commission case No.	Product/country	Petitioners/supporters
A–570–822	731–TA–624	Helical Spring Lock Washers/China	Illinois Tool Works.
A–570–825	731–TA–653	Sebacic Acid/China	Union Camp.
A–570–826	731–TA–663	Paper Clips/China	ACCO USA.
			Labelon/Noesting.
			TRICO Manufacturing.
A–570–827	731–TA–669	Cased Pencils/China	Blackfeet Indian Writing Instrument.
			Dixon-Ticonderoga.
			Empire Berol.
			Faber-Castell.
			General Pencil.
			JR Moon Pencil.
			Musgrave Pen & Pencil.
			Panda.
			Writing Instrument Manufacturers Association, Pencil Section.
A–570–828	731–TA–672	Silicomanganese/China	Elkem Metals.
			Oil, Chemical and Atomic Workers (Local 3–639).
A–570–830	731–TA–677	Coumarin/China	Rhone-Poulenc.
A–570–831	731–TA–683	Fresh Garlic/China	A&D Christopher Ranch.
			Belridge Packing.
			Colusa Produce.
			Denice & Filice Packing.
			El Camino Packing.
			The Garlic Company.
			Vessey and Company.
A–570–832	731–TA–696	Pure Magnesium/China	Dow Chemical.
			International Union of Operating Engineers (Local 564).
			Magnesium Corporation of America.
			United Steelworkers of America (Local 8319).
A–570–835	731–TA–703	Furfuryl Alcohol/China	QO Chemicals.
A–570–836	731–TA–718	Glycine/China	Chattem.
			Hampshire Chemical.
A–570–840	731–TA–724	Manganese Metal/China	Elkem Metals.
			Kerr-McGee.
A–570–842	731–TA–726	Polyvinyl Alcohol/China	Air Products and Chemicals.
A–570–844	731–TA–741	Melamine Institutional Dinnerware/China	Carlisle Food Service Products.
			Lexington United.
			Plastics Manufacturing.
A–570–846	731–TA–744	Brake Rotors/China	Brake Parts.
			Coalition for the Preservation of American Brake Drum and Rotor Aftermarket Manufacturers.
			Iroquois Tool Systems.
			Kelsey Hayes.
			Kinetic Parts Manufacturing.
			Overseas Auto Parts.
			Wagner Brake.
A–570–847	731–TA–749	Persulfates/China	FMC.
A–570–848	731–TA–752	Crawfish Tail Meat/China	A&S Crawfish.
			Acadiana Fisherman's Co-Op.
			Arnaudville Seafood.
			Atchafalaya Crawfish Processors.
			Basin Crawfish Processors.
			Bayou Land Seafood.
			Becnel's Meat & Seafood.
			Bellard's Poultry & Crawfish.
			Bonanza Crawfish Farm.
			Cajun Seafood Distributors.
			Carl's Seafood.
			Catahoula Crawfish.
			Choplin SFD.
			CJ's Seafood & Purged Crawfish.
			Clearwater Crawfish.
			Crawfish Processors Alliance.
			Harvey's Seafood.
			Lawtell Crawfish Processors.
			Louisiana Premium Seafoods.
			Louisiana Seafood.
			LT West.
			Phillips Seafood.
			Prairie Cajun Wholesale Seafood Dist.
			Riceland Crawfish.

Commerce case No.	Commission case No.	Product/country	Petitioners/supporters
			Schexnider Crawfish.
			Seafood International Distributors.
			Sylvester's Processors.
			Teche Valley Seafood.
A–570–849	731–TA–753	Cut-to-Length Carbon Steel Plate/China	Acme Metals Inc.
			Bethlehem Steel.
			CitiSteel USA Inc.
			Geneva Steel.
			Gulf States Steel.
			Lukens Inc.
			National Steel.
			US Steel.
			United Steelworkers of America.
A–570–850	731–TA–757	Collated Roofing Nails/China	Illinois Tool Works.
			International Staple and Machines.
			Stanley-Bostitch.
A–570–851	731–TA–777	Preserved Mushrooms/China	LK Bowman.
			Modern Mushroom Farms.
			Monterey Mushrooms.
			Mount Laurel Canning.
			Mushroom Canning.
			Southwood Farms.
			Sunny Dell Foods.
			United Canning.
A–570–852	731–TA–814	Creatine Monohydrate/China	Pfanstiehl Laboratories.
A–570–853	731–TA–828	Aspirin/China	Rhodia.
A–570–855	731–TA–841	Non-Frozen Apple Juice Concentrate/China	Coloma Frozen Foods.
			Green Valley Apples of California.
			Knouse Foods Coop.
			Mason County Fruit Packers Coop.
			Tree Top.
A–570–856	731–TA–851	Synthetic Indigo/China	Buffalo Color.
			United Steelworkers of America.
A–570–860	731–TA–874	Steel Concrete Reinforcing Bar/China	AB Steel Mill Inc.
			AmeriSteel.
			Auburn Steel.
			Birmingham Steel.
			Border Steel.
			Cascade Steel Rolling Mills Inc.
			CMC Steel Group.
			Co-Steel Inc.
			Marion Steel.
			North Star Steel Co.
			Nucor Steel.
			Rebar Trade Action Coalition.
			Riverview Steel.
			Sheffield Steel.
			TAMCO.
			TXI-Chaparral Steel Co.
A–570–862	731–TA–891	Foundry Coke/China	ABC Coke.
			Citizens Gas and Coke Utility.
			Erie Coke.
			Sloss Industries Corp.
			Tonawanda Coke.
			United Steelworkers of America.
A–570–863	731–TA–893	Honey/China	AH Meyer & Sons.
			Adee Honey Farms.
			Althoff Apiaries.
			American Beekeeping Federation.
			American Honey Producers Association.
			Anderson Apiaries.
			Arroyo Apiaries.
			Artesian Honey Producers.
			B Weaver Apiaries.
			Bailey Enterprises.
			Barkman Honey.
			Basler Honey Apiary.
			Beals Honey.
			Bears Paw Apiaries.
			Beaverhead Honey.
			Bee Biz.
			Bee Haven Honey.
			Belliston Brothers Apiaries.
			Big Sky Honey.

Commerce case No.	Commission case No.	Product/country	Petitioners/supporters
			Bill Rhodes Honey. Richard E Blake. Curt Bronnenbery. Brown's Honey Farms. Brumley's Bees. Buhmann Apiaries. Carys Honey Farms. Chaparrel Honey. Charles Apiaries. Mitchell Charles. Collins Honey. Conor Apiaries. Coy's Honey Farm. Dave Nelson Apiaries. Delta Bee. Eisele's Pollination & Honey. Ellingsoa's. Elliott Curtis & Sons. Charles L Emmons, Sr. Gause Honey. Gene Brandi Apiaries. Griffith Honey. Haff Apiaries. Hamilton Bee Farms. Hamilton Honey. Happie Bee. Harvest Honey. Harvey's Honey. Hiatt Honey. Hoffman Honey. Hollman Apiaries. Honey House. Honeybee Apiaries. Gary M Honl. Rand William Honl and Sydney Jo Honl. James R & Joann Smith Trust. Jaynes Bee Products. Johnston Honey Farms. Larry Johnston. Ke-An Honey. Kent Honeybees. Lake-Indianhead Honey Farms. Lamb's Honey Farm. Las Flores Apiaries. Mackrill Honey Farms & Sales. Raymond Marquette. Mason & Sons Honey. McCoy's Sunny South Apiaries. Merrimack Valley Apiaries & Evergreen Honey. Met 2 Honey Farm. Missouri River Honey. Mitchell Brothers Honey. Monda Honey Farm. Montana Dakota Honey. Northern Bloom Honey. Noye's Apiaries. Oakes Honey. Oakley Honey Farms. Old Mill Apiaries. Opp Honey. Oro Dulce. Peterson's "Naturally Sweet" Honey. Potoczak Bee Farms. Price Apiaries. Pure Sweet Honey Farms. Robertson Pollination Service. Robson Honey. William Robson. Rosedale Apiaries. Ryan Apiaries. Schmidt Honey Farms. Simpson Apiaries. Sioux Honey Association.

Commerce case No.	Commission case No.	Product/country	Petitioners/supporters
			Smoot Honey.
			Solby Honey.
			Stahlman Apiaries.
			Steve E Parks Apiaries.
			Stroope Bee & Honey.
			T&D Honey Bee.
			Talbott's Honey.
			Terry Apiaries.
			Thompson Apiaries.
			Triple A Farm.
			Tropical Blossom Honey.
			Tubbs Apiaries.
			Venable Wholesale.
			Walter L Wilson Buzz 76 Apiaries.
			Wiebersiek Honey Farms.
			Wilmer Farms.
			Brent J Woodworth.
			Wooten's Golden Queens.
			Yaddof Apiaries.
A–570–864	731–TA–895	Pure Magnesium (Granular)/China	Concerned Employees of Northwest Alloys.
			Magnesium Corporation of America.
			United Steelworkers of America.
			United Steelworkers of America (Local 8319).
A–570–865	731–TA–899	Hot-Rolled Steel Products/China	Bethlehem Steel.
			Gallatin Steel.
			Independent Steelworkers.
			IPSCO.
			LTV Steel.
			National Steel.
			Nucor.
			Rouge Steel Co.
			Steel Dynamics.
			US Steel.
			United Steelworkers of America.
			WCI Steel Inc.
			Weirton Steel.
			Wheeling-Pittsburgh Steel Corp.
A–570–866	731–TA–921	Folding Gift Boxes/China	Field Container.
			Harvard Folding Box.
			Sterling Packaging.
			Superior Packaging.
A–570–867	731–TA–922	Automotive Replacement Glass Windshields/China.	PPG Industries.
			Safelite Glass.
			Viracon/Curvlite Inc.
			Visteon Corporation.
A–570–868	731–TA–932	Folding Metal Tables and Chairs/China	Krueger International.
			McCourt Manufacturing.
			Meco.
			Virco Manufacturing.
A–570–873	731–TA–986	Ferrovanadium/China	Bear Metallurgical Co.
			Shieldalloy Metallurgical Corp.
A–570–875	731–TA–990	Non-Malleable Cast Iron Pipe Fittings/China	Anvil International Inc.
			Buck Co Inc.
			Frazier & Frazier Industries.
			Ward Manufacturing Inc.
A–570–877	731–TA–1010	Lawn and Garden Steel Fence Posts/China	Steel City Corp.
A–570–878	731–TA–1013	Saccharin/China	PMC Specialties Group Inc.
A–570–879	731–TA–1014	Polyvinyl Alcohol/China	Celanese Ltd.
			E I du Pont de Nemours & Co.
A–570–880	731–TA–1020	Barium Carbonate/China	Chemical Products Corp.
A–570–881	731–TA–1021	Malleable Iron Pipe Fittings/China	Anvil International Inc.
			Buck Co Inc.
			Ward Manufacturing Inc.
A–570–882	731–TA–1022	Refined Brown Aluminum Oxide/China	C–E Minerals.
			Treibacher Schleifmittel North America Inc.
			Washington Mills Co Inc.
A–570–884	731–TA–1034	Certain Color Television Receivers/China	Five Rivers Electronic Innovations LLC.
			Industrial Division of the Communications Workers of America (IUECWA).
			International Brotherhood of Electrical Workers (IBEW).
A–570–886	731–TA–1043	Polyethylene Retail Carrier Bags/China	Aargus Plastics Inc.
			Advance Polybags Inc.
			Advance Polybags (Nevada) Inc.

Commerce case No.	Commission case No.	Product/country	Petitioners/supporters
			Advance Polybags (Northeast) Inc. Alpha Industries Inc. Alpine Plastics Inc. Ampac Packaging LLC. API Enterprises Inc. Command Packaging. Continental Poly Bags Inc. Durabag Co Inc. Europackaging LLC. Genpak LLC (formerly Continental Superbag LLC). Genpak LLC (formerly Strout Plastics). Hilex Poly Co LLC. Inteplast Group Ltd. PCL Packaging Inc. Poly-Pak Industries Inc. Roplast Industries Inc. Superbag Corp. Unistar Plastics LLC. Vanguard Plastics Inc. VS Plastics LLC.
A–570–887	731–TA–1046	Tetrahydrofurfuryl Alcohol/China	Penn Specialty Chemicals Inc.
A–570–888	731–TA–1047	Ironing Tables and Certain Parts Thereof/China.	Home Products International Inc.
A–570–890	731–TA–1058	Wooden Bedroom Furniture/China	American Drew. American of Martinsville. Bassett Furniture Industries Inc. Bebe Furniture. Carolina Furniture Works Inc. Carpenters Industrial Union Local 2093. Century Furniture Industries. Country Craft Furniture Inc. Craftique. Crawford Furniture Mfg Corp. EJ Victor Inc. Forest Designs. Harden Furniture Inc. Hart Furniture. Higdon Furniture Co. IUE Industrial Division of CWA Local 82472. Johnston Tombigbee Furniture Mfg Co. Kincaid Furniture Co Inc. L & J G Stickley Inc. Lea Industries. Michels & Co. MJ Wood Products Inc. Mobel Inc. Modern Furniture Manufacturers Inc. Moosehead Mfg Co. Oakwood Interiors. O'Sullivan Industries Inc. Pennsylvania House Inc. Perdues Inc. Sandberg Furniture Mfg Co Inc. Stanley Furniture Co Inc. Statton Furniture Mfg Assoc. T Copeland & Sons. Teamsters, Chauffeurs, Warehousemen and Helpers Local 991. Tom Seely Furniture. UBC Southern Council of Industrial Workers Local Union 2305. United Steelworkers of America Local 193U. Vaughan Furniture Co Inc. Vaughan-Bassett Furniture Co Inc. Vermont Tubbs. Webb Furniture Enterprises Inc.
A–570–891	731–TA–1059	Hand Trucks and Certain Parts Thereof/China	B&P Manufacturing. Gleason Industrial Products Inc. Harper Trucks Inc. Magline Inc. Precision Products Inc. Wesco Industrial Products Inc.
A–570–892	731–TA–1060	Carbazole Violet Pigment 23/China	Allegheny Color Corp.

Commerce case No.	Commission case No.	Product/country	Petitioners/supporters
A–570–894	731–TA–1070	Certain Tissue Paper Products/China	Barker Fine Color Inc. Clariant Corp. Nation Ford Chemical Co. Sun Chemical Co. American Crepe Corp. Cindus Corp. Eagle Tissue LLC. Flower City Tissue Mills Co and Subsidiary. Garlock Printing & Converting Corp. Green Mtn Specialties Inc. Hallmark Cards Inc. Pacon Corp. Paper, Allied-Industrial, Chemical and Energy Workers. International Union AFL–CIO (''PACE''). Paper Service LTD. Putney Paper. Seaman Paper Co of MA Inc.
A–570–895	731–TA–1069	Certain Crepe Paper Products/China	American Crepe Corp. Cindus Corp. Paper, Allied-Industrial, Chemical and Energy Workers International Union AFL–CIO (''PACE''). Seaman Paper Co of MA Inc.
A–570–896	731–TA–1071	Alloy Magnesium/China	Garfield Alloys Inc. Glass, Molders, Pottery, Plastics & Allied Workers International Local 374. Halaco Engineering. MagReTech Inc. United Steelworkers of America Local 8319. US Magnesium LLC.
A–570–899	731–TA–1091	Artists' Canvas/China	Duro Art Industries. ICG/Holliston Mills Inc. Signature World Class Canvas LLC. Tara Materials Inc.
A–570–898	731–TA–1082	Chlorinated Isocyanurates/China	BioLab Inc. Clearon Corp. Occidental Chemical Corp.
A–570–901	731–TA–1095	Certain Lined Paper School Supplies/China	Fay Paper Products Inc. MeadWestvaco Consumer & Office Products. Norcom Inc. Pacon Corp. Roaring Spring Blank Book Co. Top Flight Inc. United Steel, Paper and Forestry, Rubber, Manufacturing, Energy, Allied Industrial and Service Workers International Union, AFL–CIO–CLC (USW).
A–570–904	731–TA–1103	Certain Activated Carbon/China	Calgon Carbon Corp. Norit Americas Inc.
A–570–905	731–TA–1104	Certain Polyester Staple Fiber/China	DAK Americas LLC. Formed Fiber Techmologies LLC. Nan Ya Plastics Corp America. Palmetto Synthetics LLC. United Synthetics Inc (USI). Wellman Inc.
A–570–908	731–TA–1110	Soium Hexametaphosphate (SHMP)/China	ICL Performance Products LP. Innophos Inc.
A–580–008	731–TA–134	Color Television Receivers/Korea	Committee to Preserve American Color Television. Independent Radionic Workers of America. Industrial Union Department, AFL–CIO. International Brotherhood of Electrical Workers. International Union of Electrical, Radio and Machine Workers.
A–580–507	731–TA–279	Malleable Cast Iron Pipe Fittings/Korea	Grinnell. Stanley G Flagg. Stockham Valves & Fittings. U-Brand. Ward Manufacturing.
A–580–601	731–TA–304	Top-of-the-Stove Stainless Steel Cooking Ware/Korea.	Farberware. Regal Ware. Revere Copper & Brass.

Commerce case No.	Commission case No.	Product/country	Petitioners/supporters
			WearEver/Proctor Silex.
A–580–603	731–TA–315	Brass Sheet and Strip/Korea	Allied Industrial Workers of America. American Brass. Bridgeport Brass. Chase Brass & Copper. Hussey Copper. International Association of Machinists & Aerospace Workers. Mechanics Educational Society of America (Local 56). The Miller Company. Olin. Revere Copper Products. United Steelworkers of America.
A–580–605	731–TA–369	Color Picture Tubes/Korea	Industrial Union Department, AFL–CIO. International Association of Machinists & Aerospace Workers. International Brotherhood of Electrical Workers. International Union of Electronic, Electrical, Technical, Salaried and Machine Workers. Philips Electronic Components Group. United Steelworkers of America. Zenith Electronics.
A–580–803	731–TA–427	Small Business Telephone Systems/Korea	American Telephone & Telegraph. Comdial. Eagle Telephonic.
A–580–805	731–TA–442	Industrial Nitrocellulose/Korea	Hercules.
A–580–807	731–TA–459	Polyethylene Terephthalate Film/Korea	E I du Pont de Nemours. Hoechst Celanese. ICI Americas.
A–580–809	731–TA–533	Circular Welded Nonalloy Steel Pipe/Korea	Allied Tube & Conduit. American Tube. Bull Moose Tube. Century Tube. CSI Tubular Products. Cyclops. Laclede Steel. LTV Tubular Products. Maruichi American. Sharon Tube. USX. Western Tube & Conduit. Wheatland Tube.
A–580–810	731–TA–540	Welded ASTM A–312 Stainless Steel Pipe/Korea.	Avesta Sandvik Tube. Bristol Metals. Crucible Materials. Damascus Tubular Products. United Steelworkers of America.
A–580–811	731–TA–546	Carbon Steel Wire Rope/Korea	Bridon American. Macwhyte. Paulsen Wire Rope. The Rochester Corporation. United Automobile, Aerospace and Agricultural Implement Workers (Local 960). Williamsport. Wire-rope Works. Wire Rope Corporation of America.
A–580–812	731–TA–556	DRAMs of 1 Megabit and Above/Korea	Micron Technology. NEC Electronics. Texas Instruments.
A–580–813	731–TA–563	Stainless Steel Butt-Weld Pipe Fittings/Korea	Flo-Mac Inc. Gerlin. Markovitz Enterprises. Shaw Alloy Piping Products. Taylor Forge Stainless.
A–580–815	731–TA–607	Cold-Rolled Carbon Steel Flat Products/Korea	Armco Steel. Bethlehem Steel. California Steel Industries. Gulf States Steel. Inland Steel Industries. LTV Steel. National Steel. Nextech.

Commerce case No.	Commission case No.	Product/country	Petitioners/supporters
A–580–816	731–TA–618	Corrosion-Resistant Carbon Steel Flat Products/Korea.	Rouge Steel Co. Sharon Steel. Theis Precision Steel. Thompson Steel. US Steel. United Steelworkers of America. WCI Steel. Weirton Steel. Armco Steel. Bethlehem Steel. California Steel Industries. Geneva Steel. Gulf States Steel. Inland Steel Industries. LTV Steel. Lukens Steel. National Steel. Nextech.
A–580–825	731–TA–715	Oil Country Tubular Goods/Korea	Rouge Steel Co. Sharon Steel. Theis Precision Steel. Thompson Steel. US Steel. United Steelworkers of America. WCI Steel. Weirton Steel. Bellville Tube. IPSCO. Koppel Steel. Lone Star Steel. Maverick Tube. Newport Steel. North Star Steel. US Steel. USS/Kobe.
A–580–829	731–TA–772	Stainless Steel Wire Rod/Korea	AL Tech Specialty Steel. Carpenter Technology. Republic Engineered Steels. Talley Metals Technology. United Steelworkers of America.
A–580–831	731–TA–791	Stainless Steel Plate in Coils/Korea	Allegheny Ludlum. Armco Steel. J&L Specialty Steel. Lukens Steel. North American Stainless. United Steelworkers of America.
A–580–834	731–TA–801	Stainless Steel Sheet and Strip/Korea	Allegheny Ludlum. Armco Steel. Bethlehem Steel. Butler Armco Independent Union. Carpenter Technology Corp. J&L Specialty Steel. North American Stainless. United Steelworkers of America. Zanesville Armco Independent Organization.
A–580–836	731–TA–821	Cut-to-Length Carbon Steel Plate/Korea	Bethlehem Steel. CitiSteel USA Inc. Geneva Steel. Gulf States Steel. IPSCO Steel. National Steel. Tuscaloosa Steel. US Steel. United Steelworkers of America.
A–580–839	731–TA–825	Polyester Staple Fiber/Korea	Arteva Specialties Sarl. E I du Pont de Nemours. Intercontinental Polymers. Wellman.
A–580–841	731–TA–854	Structural Steel Beams/Korea	Northwestern Steel and Wire. Nucor. Nucor-Yamato Steel. TXI-Chaparral Steel. United Steelworkers of America.
A–580–844	731–TA–877	Steel Concrete Reinforcing Bar/Korea	AB Steel Mill Inc.

Commerce case No.	Commission case No.	Product/country	Petitioners/supporters
			AmeriSteel.
			Auburn Steel.
			Birmingham Steel.
			Border Steel.
			Cascade Steel Rolling Mills Inc.
			CMC Steel Group.
			Co-Steel Inc.
			Marion Steel.
			North Star Steel Co.
			Nucor Steel.
			Rebar Trade Action Coalition.
			Riverview Steel.
			Sheffield Steel.
			TAMCO.
			TXI-Chaparral Steel Co.
A–580–846	731–TA–889	Stainless Steel Angle/Korea	Slater Steels.
			United Steelworkers of America.
A–580–847	731–TA–916	Stainless Steel Bar/Korea	Carpenter Technology.
			Crucible Specialty Metals.
			Electralloy.
			Empire Specialty Steel.
			Republic Technologies International.
			Slater Steels.
			United Steelworkers of America.
A–580–850	731–TA–1017	Polyvinyl Alcohol/Korea	Celanese Ltd.
			E I du Pont de Nemours & Co.
A–580–852	731–TA–1026	Prestressed Concrete Steel Wire Strand/Korea.	American Spring Wire Corp.
			Insteel Wire Products Co.
			Sivaco Georgia LLC.
			Strand Tech Martin Inc.
			Sumiden Wire Products Corp.
A–583–008	731–TA–132	Small Diameter Carbon Steel Pipe and Tube/Tawian.	Allied Tube & Conduit.
			American Tube.
			Bull Moose Tube.
			Copperweld Tubing.
			J&L Steel.
			Kaiser Steel.
			Merchant Metals.
			Pittsburgh Tube.
			Southwestern Pipe.
			Western Tube & Conduit.
A–583–009	731–TA–135	Color Television Receivers/Taiwan	Committee to Preserve American Color Television.
			Independent Radionic Workers of America.
			Industrial Union Department, AFL–CIO.
			International Brotherhood of Electrical Workers.
			International Union of Electrical, Radio and Machine Workers.
A–583–080	AA1921–197	Carbon Steel Plate/Taiwan	No Petition (self-initiated by Treasury); Commerce service list identifies:.
			Bethlehem Steel.
			China Steel.
			US Steel.
A–583–505	731–TA–277	Oil Country Tubular Goods/Taiwan	CF&I Steel.
			Copperweld Tubing.
			Cyclops.
			KPC.
			Lone Star Steel.
			LTV Steel.
			Maverick Tube.
			Quanex.
			US Steel.
A–583–507	731–TA–280	Malleable Cast Iron Pipe Fittings/Taiwan	Grinnell.
			Stanley G Flagg.
			Stockham Valves & Fittings.
			U-Brand.
			Ward Manufacturing.
A–583–508	731–TA–299	Porcelain-on-Steel Cooking Ware/Taiwan	General Housewares.
A–583–603	731–TA–305	Top-of-the-Stove Stainless Steel Cooking Ware/Taiwan.	Farberware.
			Regal Ware.
			Revere Copper & Brass.
			WearEver/Proctor Silex.

Commerce case No.	Commission case No.	Product/country	Petitioners/supporters
A–583–605	731–TA–310	Carbon Steel Butt-Weld Pipe Fittings/Taiwan	Ladish. Mills Iron Works. Steel Forgings. Tube Forgings of America. Weldbend.
A–583–803	731–TA–410	Light-Walled Rectangular Tube/Taiwan	Bull Moose Tube. Hannibal Industries. Harris Tube. Maruichi American. Searing Industries. Southwestern Pipe. Western Tube & Conduit.
A–583–806	731–TA–428	Small Business Telephone Systems/Taiwan	American Telephone & Telegraph. Comdial. Eagle Telephonic.
A–583–810	731–TA–475	Chrome-Plated Lug Nuts/Taiwan	Consolidated International Automotive. Key Manufacturing. McGard.
A–583–814	731–TA–536	Circular Welded Nonalloy Steel Pipe/Taiwan	Allied Tube & Conduit. American Tube. Bull Moose Tube. Century Tube. CSI Tubular Products. Cyclops. Laclede Steel. LTV Tubular Products. Maruichi American. Sharon Tube. USX. Western Tube & Conduit. Wheatland Tube.
A–583–815	731–TA–541	Welded ASTM A–312 Stainless Steel Pipe/Taiwan.	Avesta Sandvik Tube. Bristol Metals. Crucible Materials. Damascus Tubular Products. United Steelworkers of America.
A–583–816	731–TA–564	Stainless Steel Butt-Weld Pipe Fittings/Taiwan	Flo-Mac Inc. Gerlin. Markovitz Enterprises. Shaw Alloy Piping Products. Taylor Forge Stainless.
A–583–820	731–TA–625	Helical Spring Lock Washers/Taiwan	Illinois Tool Works.
A–583–821	731–TA–640	Forged Stainless Steel Flanges/Taiwan	Gerlin. Ideal Forging. Maass Flange. Markovitz Enterprises.
A–583–824	731–TA–729	Polyvinyl Alcohol/Taiwan	Air Products and Chemicals.
A–583–825	731–TA–743	Melamine Institutional Dinnerware/Taiwan	Carlisle Food Service Products. Lexington United. Plastics Manufacturing.
A–583–826	731–TA–759	Collated Roofing Nails/Taiwan	Illinois Tool Works. International Staple and Machines. Stanley-Bostitch.
A–583–827	731–TA–762	SRAMs/Taiwan	Micron Technology.
A–583–828	731–TA–775	Stainless Steel Wire Rod/Taiwan	AL Tech Specialty Steel. Carpenter Technology. Republic Engineered Steels. Talley Metals Technology. United Steelworkers of America.
A–583–830	731–TA–793	Stainless Steel Plate in Coils/Taiwan	Allegheny Ludlum. Armco Steel. J&L Specialty Steel. Lukens Steel. North American Stainless. United Steelworkers of America.
A–583–831	731–TA–803	Stainless Steel Sheet and Strip/Taiwan	Allegheny Ludlum. Armco Steel. Bethlehem Steel. Butler Armco Independent Union. Carpenter Technology Corp. J&L Specialty Steel. North American Stainless. United Steelworkers of America. Zanesville Armco Independent Organization.

Commerce case No.	Commission case No.	Product/country	Petitioners/supporters
A–583–833	731–TA–826	Polyester Staple Fiber/Taiwan	Arteva Specialties Sarl. Intercontinental Polymers. Wellman.
A–583–835	731–TA–906	Hot-Rolled Steel Products/Taiwan	Bethlehem Steel. Gallatin Steel. Independent Steelworkers. IPSCO. LTV Steel. National Steel. Nucor. Rouge Steel Co. Steel Dynamics. US Steel. United Steelworkers of America. WCI Steel Inc. Weirton Steel. Wheeling-Pittsburgh Steel Corp.
A–583–837	731–TA–934	Polyethylene Terephthalate Film, Sheet and Strip (PET Film)/Taiwan.	DuPont Teijin Films. Mitsubishi Polyester Film LLC. SKC America Inc. Toray Plastics (America).
A–588–005	731–TA–48	High Power Microwave Amplifiers/Japan	Aydin. MCL.
A–588–015	AA1921–66	Television Receivers/Japan	AGIV (USA). Casio Computer. CBM America. Citizen Watch. Funai Electric. Hitachi. Industrial Union Department. JC Penny. Matsushita. Mitsubishi Electric. Montgomery Ward. NEC. Orion Electric. PT Imports. Philips Electronics. Philips Magnavox. Sanyo. Sharp. Toshiba. Toshiba America Consumer Products. Victor Company of Japan. Zenith Electronics.
A–588–028	AA1921–111	Roller Chain/Japan	Acme Chain Division, North American Rockwell. American Chain Association. Atlas Chain & Precision Products. Diamond Chain. Link-Belt Chain Division, FMC. Morse Chain Division, Borg Warner. Rex Chainbelt.
A–588–029	AA1921–85	Fish Netting of Man-Made Fiber/Japan	Jovanovich Supply. LFSI. Trans-Pacific Trading.
A–588–038	AA1921–98	Bicycle Speedometers/Japan	Avocet. Cat Eye. Diversified Products. NS International. Sanyo Electric. Stewart-Warner.
A–588–041	AA1921–115	Synthetic Methionine/Japan	Monsanto.
A–588–045	AA1921–124	Steel Wire Rope/Japan	AMSTED Industries.
A–588–046	AA1921–129	Polychloroprene Rubber/Japan	E I du Pont de Nemours.
A–588–054	AA1921–143	Tapered Roller Bearings 4 Inches and Under/Japan.	No companies identified as petitioners at the Commission; Commerce service list identifies: American Honda Motor. Federal Mogul. Ford Motor. General Motors. Honda. Hoover-NSK Bearing.

Commerce case No.	Commission case No.	Product/country	Petitioners/supporters
			Isuzu. Itocho. ITOCHU International. Kanematsu-Goshu USA. Kawasaki Heavy Duty Industries. Komatsu America. Koyo Seiko. Kubota Tractor. Mitsubishi. Motorambar. Nachi America. Nachi Western. Nachi-Fujikoshi. Nippon Seiko. Nissan Motor. Nissan Motor USA. NSK. NTN. Subaru of America. Sumitomo. Suzuki Motor. Timken. Toyota Motor Sales. Yamaha Motors.
A–588–055	AA1921–154	Acrylic Sheet/Japan	Polycast Technology.
A–588–056	AA1921–162	Melamine/Japan	Melamine Chemical.
A–588–068	AA1921–188	Prestressed Concrete Steel Wire Strand/Japan.	American Spring Wire. Armco Steel. Bethlehem Steel. CF&I Steel. Florida Wire & Cable.
A–588–405	731–TA–207	Cellular Mobile Telephones/Japan	EF Johnson. Motorola.
A–588–602	731–TA–309	Carbon Steel Butt-Weld Pipe Fittings/Japan	Ladish. Mills Iron Works. Steel Forgings. Tube Forgings of America. Weldbend.
A–588–604	731–TA–343	Tapered Roller Bearings Over 4 Inches/Japan	L&S Bearing. Timken. Torrington.
A–588–605	731–TA–347	Malleable Cast Iron Pipe Fittings/Japan	Grinnell. Stanley G Flagg. Stockham Valves & Fittings. U-Brand. Ward Manufacturing.
A–588–609	731–TA–368	Color Picture Tubes/Japan	Industrial Union Department, AFL–CIO. International Association of Machinists & Aerospace Workers. International Brotherhood of Electrical Workers. International Union of Electronic, Electrical, Technical, Salaried and Machine Workers. Philips Electronic Components Group. United Steelworkers of America. Zenith Electronics.
A–588–702	731–TA–376	Stainless Steel Butt-Weld Pipe Fittings/Japan	Flo-Mac Inc. Flowline. Shaw Alloy Piping Products. Taylor Forge Stainless.
A–588–703	731–TA–377	Internal Combustion Industrial Forklift Trucks/Japan.	Ad-Hoc Group of Workers from Hyster's Berea, Kentucky and Sulligent, Alabama Facilities. Allied Industrial Workers of America. Hyster. Independent Lift Truck Builders Union. International Association of Machinists & Aerospace Workers. United Shop & Service Employees.
A–588–704	731–TA–379	Brass Sheet and Strip/Japan	Allied Industrial Workers of America. American Brass. Bridgeport Brass. Chase Brass & Copper. Hussey Copper.

Commerce case No.	Commission case No.	Product/country	Petitioners/supporters
			International Association of Machinists & Aerospace Workers.
			Mechanics Educational Society of America (Local 56).
			The Miller Company.
			North Coast Brass & Copper.
			Olin.
			Pegg Metals.
			Revere Copper Products.
			United Steelworkers of America.
A–588–706	731–TA–384	Nitrile Rubber/Japan	Uniroyal Chemical.
A–588–707	731–TA–386	Granular Polytetrafluoroethylene/Japan	E I du Pont de Nemours.
			ICI Americas.
A–588–802	731–TA–389	3.5'' Microdisks/Japan	Verbatim.
A–588–804	731–TA–394–A	Ball Bearings/Japan	Barden Corp.
			Emerson Power Transmission.
			Kubar Bearings.
			McGill Manufacturing Co.
			MPB.
			Rexnord Inc.
			Rollway Bearings.
			Torrington.
A–588–804	731–TA–394–B	Cylindrical Roller Bearings/Japan	Barden Corp.
			Emerson Power Transmission.
			Kubar Bearings.
			MPB.
			Rollway Bearings.
			Torrington.
A–588–804	731–TA–394–C	Spherical Plain Bearings/Japan	Barden Corp.
			Emerson Power Transmission.
			Kubar Bearings.
			Rollway Bearings.
			Torrington.
A–588–806	731–TA–408	Electrolytic Manganese Dioxide/Japan	Chemetals.
			Kerr-McGee.
			Rayovac.
A–588–807	731–TA–414	Industrial Belts/Japan	The Gates Rubber Company.
			The Goodyear Tire and Rubber Company.
A–588–809	731–TA–426	Small Business Telephone Systems/Japan	American Telephone & Telegraph.
			Comdial.
			Eagle Telephonic.
A–588–810	731–TA–429	Mechanical Transfer Presses/Japan	Allied Products.
			United Autoworkers of America.
			United Steelworkers of America.
A–588–811	731–TA–432	Drafting Machines/Japan	Vemco.
A–588–812	731–TA–440	Industrial Nitrocellulose/Japan	Hercules.
A–588–815	731–TA–461	Gray Portland Cement and Clinker/Japan	Calaveras Cement.
			Hanson Permanente Cement.
			Independent Workers of North America (Locals 49, 52, 89, 192 and 471).
			International Union of Operating Engineers (Local 12).
			National Cement Co Inc.
			National Cement Company of California.
			Southdown.
A–588–817	731–TA–469	Electroluminescent Flat-Panel Displays/Japan	The Cherry Corporation.
			Electro Plasma.
			Magnascreen.
			OIS Optical Imaging Systems.
			Photonics Technology.
			Planar Systems.
			Plasmaco.
A–588–823	731–TA–571	Professional Electric Cutting Tools/Japan	Black & Decker.
A–588–826	731–TA–617	Corrosion-Resistant Carbon Steel Flat Products/Japan.	Bethlehem Steel.
			California Steel Industries.
			Geneva Steel.
			Gulf States Steel.
			Lukens Steel.
			Nextech.
			Rouge Steel Co.
			Sharon Steel.
			Theis Precision Steel.
			Thompson Steel.

Commerce case No.	Commission case No.	Product/country	Petitioners/supporters
			US Steel. United Steelworkers of America. WCI Steel. Weirton Steel.
A–588–831	731–TA–660	Grain-Oriented Silicon Electrical Steel/Japan	Allegheny Ludlum. Armco Steel. United Steelworkers of America.
A–588–833	731–TA–681	Stainless Steel Bar/Japan	AL Tech Specialty Steel. Carpenter Technology. Crucible Specialty Metals. Electralloy. Republic Engineered Steels. Slater Steels. Talley Metals Technology. United Steelworkers of America.
A–588–835	731–TA–714	Oil Country Tubular Goods/Japan	IPSCO. Koppel Steel. Lone Star Steel Co. Maverick Tube. Newport Steel. North Star Steel. US Steel.
A–588–836	731–TA–727	Polyvinyl Alcohol/Japan	Air Products and Chemicals.
A–588–837	731–TA–737	Large Newspaper Printing Presses/Japan	Rockwell Graphics Systems.
A–588–838	731–TA–739	Clad Steel Plate/Japan	Lukens Steel.
A–588–839	731–TA–740	Sodium Azide/Japan	American Azide.
A–588–840	731–TA–748	Gas Turbo-Compressor Systems/Japan	Demag Delaval. Dresser-Rand. United Steelworkers of America.
A–588–841	731–TA–750	Vector Supercomputers/Japan	Cray Research.
A–588–843	731–TA–771	Stainless Steel Wire Rod/Japan	AL Tech Specialty Steel. Carpenter Technology. Republic Engineered Steels. Talley Metals Technology. United Steelworkers of America.
A–588–845	731–TA–800	Stainless Steel Sheet and Strip/Japan	Allegheny Ludlum. Armco Steel. Bethlehem Steel. Butler Armco Independent Union. Carpenter Technology Corp. J&L Specialty Steel. North American Stainless. United Steelworkers of America. Zanesville Armco Independent Organization.
A–588–846	731–TA–807	Hot-Rolled Carbon Steel Flat Products/Japan	Acme Steel. Bethlehem Steel. California Steel Industries. Gallatin Steel. Geneva Steel. Gulf States Steel. Independent Steelworkers. IPSCO. Ispat/Inland. LTV Steel. Nucor. Rouge Steel Co. Steel Dynamics. US Steel. United Steelworkers of America. WCI Steel. Weirton Steel. Wheeling-Pittsburgh Steel Corp.
A–588–847	731–TA–820	Cut-to-Length Carbon Steel Plate/Japan	Bethlehem Steel. CitiSteel USA Inc. Geneva Steel. Gulf States Steel. IPSCO Steel. Tuscaloosa Steel. US Steel. United Steelworkers of America.
A–588–850	731–TA–847	Large-Diameter Carbon Steel Seamless Pipe/Japan.	North Star Steel. Timken. US Steel. United Steelworkers of America.

Commerce case No.	Commission case No.	Product/country	Petitioners/supporters
			USS/Kobe.
A–588–851	731–TA–847	Small-Diameter Carbon Steel Seamless Pipe/Japan.	Koppel Steel. North Star Steel. Sharon Tube. Timken. US Steel. United Steelworkers of America. USS/Kobe. Vision Metals' Gulf States Tube.
A–588–852	731–TA–853	Structural Steel Beams/Japan	Northwestern Steel and Wire. Nucor. Nucor-Yamato Steel. TXI-Chaparral Steel. United Steelworkers of America.
A–588–854	731–TA–860	Tin-Mill Products/Japan	Independent Steelworkers. United Steelworkers of America. Weirton Steel.
A–588–856	731–TA–888	Stainless Steel Angle/Japan	Slater Steels. United Steelworkers of America.
A–588–857	731–TA–919	Welded Large Diameter Line Pipe/Japan	American Cast Iron Pipe. Berg Steel Pipe. Bethlehem Steel. Napa Pipe/Oregon Steel Mills. Saw Pipes USA. Stupp. US Steel.
A–588–861	731–TA–1016	Polyvinyl Alcohol/Japan	Celenex Ltd. E I du Pont de Nemours & Co.
A–588–862	731–TA–1023	Certain Ceramic Station Post Insulators/Japan	Lapp Insulator Co LLC. Newell Porcelain Co Inc. Victor Insulators Inc.
A–588–866	731–TA–1090	Superalloy Degassed Chromium/Japan	Eramet Marietta Inc.
A–602–803	731–TA–612	Corrosion-Resistant Carbon Steel Flat Products/Australia.	Armco Steel. Bethlehem Steel. California Steel Industries. Geneva Steel. Gulf States Steel. Inland Steel Industries. LTV Steel. Lukens Steel. National Steel. Nextech. Rouge Steel Co. Sharon Steel. Theis Precision Steel. Thompson Steel. US Steel. United Steelworkers of America. WCI Steel. Weirton Steel.
A–791–805	731–TA–792	Stainless Steel Plate in Coils/South Africa	Allegheny Ludlum. Armco Steel. J&L Specialty Steel. Lukens Steel. North American Stainless. United Steelworkers of America.
A–791–808	731–TA–850	Small-Diameter Carbon Steel Seamless Pipe/South Africa.	Koppel Steel. North Star Steel. Sharon Tube. Timken. US Steel. United Steelworkers of America. USS/Kobe. Vision Metals' Gulf States Tube.
A–791–809	731–TA–905	Hot-Rolled Steel Products/South Africa	Bethlehem Steel. Gallatin Steel. Independent Steelworkers. IPSCO. LTV Steel. National Steel. Nucor. Rouge Steel Co. Steel Dynamics.

Commerce case No.	Commission case No.	Product/country	Petitioners/supporters
			US Steel.
			United Steelworkers of America.
			WCI Steel Inc.
			Weirton Steel.
			Wheeling-Pittsburgh Steel Corp.
A–791–815	731–TA–987	Ferrovanadium/South Africa	Bear Metallurgical Co.
			Shieldalloy Metallurgical Corp.
A–821–801	731–TA–340E	Solid Urea/Russia	Agrico Chemical.
			American Cyanamid.
			CF Industries.
			First Mississippi.
			Mississippi Chemical.
			Terra International.
			WR Grace.
A–821–802	731–TA–539–C	Uranium/Russia	Ferret Exploration.
			First Holding.
			Geomex Minerals.
			IMC Fertilizer.
			Malapai Resources.
			Oil, Chemical and Atomic Workers.
			Pathfinder Mines.
			Power Resources.
			Rio Algom Mining.
			Solution Mining.
			Total Minerals.
			Umetco Minerals.
			Uranium Resources.
A–821–804	731–TA–568	Ferrosilicon/Russia	AIMCOR.
			Alabama Silicon.
			American Alloys.
			Globe Metallurgical.
			Oil, Chemical and Atomic Workers (Local 389).
			Silicon Metaltech.
			United Autoworkers of America (Local 523).
			United Steelworkers of America (Locals 2528, 3081, 5171 and 12646).
A–821–805	731–TA–697	Pure Magnesium/Russia	Dow Chemical.
			International Union of Operating Engineers (Local 564).
			Magnesium Corporation of America.
			United Steelworkers of America (Local 8319).
A–821–807	731–TA–702	Ferrovanadium and Nitrided Vanadium/Russia	Shieldalloy Metallurgical.
A–821–809	731–TA–808	Hot-Rolled Carbon Steel Flat Products/Russia	Acme Steel.
			Bethlehem Steel.
			California Steel Industries.
			Gallatin Steel.
			Geneva Steel.
			Gulf States Steel.
			Independent Steelworkers.
			IPSCO.
			Ispat/Inland.
			LTV Steel.
			National Steel.
			Nucor.
			Rouge Steel Co.
			Steel Dynamics.
			US Steel.
			United Steelworkers of America.
			WCI Steel.
			Weirton Steel.
			Wheeling-Pittsburgh Steel Corp.
A–821–811	731–TA–856	Ammonium Nitrate/Russia	Agrium.
			Air Products and Chemicals.
			El Dorado Chemical.
			LaRoche.
			Mississippi Chemical.
			Nitram.
			Wil-Gro Fertilizer.
A–821–817	731–TA–991	Silicon Metal/Russia	Globe Metallurgical Inc.
			SIMCALA Inc.
A–821–819	731–TA1072	Pure and Alloy Magnesium/Russia	Garfield Alloys Inc.
			Glass, Molders, Pottery, Plastics & Allied Workers.

Commerce case No.	Commission case No.	Product/country	Petitioners/supporters
			International Local 374. Halaco Engineering. MagReTech Inc. United Steelworkers of America Local 8319. US Magnesium LLC.
A–822–801	731–TA–340B	Solid Urea/Belarus	Agrico Chemical. American Cyanamid. CF Industries. First Mississippi. Mississippi Chemical. Terra International. WR Grace.
A–822–804	731–TA–873	Steel Concrete Reinforcing Bar/Belarus	AB Steel Mill Inc. AmeriSteel. Auburn Steel. Birmingham Steel. Border Steel. Cascade Steel Rolling Mills Inc. CMC Steel Group. Co-Steel Inc. Marion Steel. North Star Steel Co. Nucor Steel. Rebar Trade Action Coalition. Riverview Steel. Sheffield Steel. TAMCO. TXI-Chaparral Steel Co.
A–823–801	731–TA–340H	Solid Urea/Ukraine	Agrico Chemical. American Cyanamid. CF Industries. First Mississippi. Mississippi Chemical. Terra International. WR Grace.
A–823–802	731–TA–539–E	Uranium/Ukraine	Ferret Exploration. First Holding. Geomex Minerals. IMC Fertilizer. Malapai Resources. Oil, Chemical and Atomic Workers. Pathfinder Mines. Power Resources. Rio Algom Mining. Solution Mining. Total Minerals. Umetco Minerals. Uranium Resources.
A–823–804	731–TA–569	Ferrosilicon/Ukraine	AIMCOR. Alabama Silicon. American Alloys. Globe Metallurgical. Oil, Chemical and Atomic Workers (Local 389). Silicon Metaltech. United Autoworkers of America (Local 523). United Steelworkers of America (Locals 2528, 3081,. 5171 and 12646).
A–823–805	731–TA–673	Silicomanganese/Ukraine	Elkem Metals. Oil, Chemical and Atomic Workers (Local 3–639).
A–823–809	731–TA–882	Steel Concrete Reinforcing Bar/Ukraine	AB Steel Mill Inc. AmeriSteel. Auburn Steel. Birmingham Steel. Border Steel. Cascade Steel Rolling Mills Inc. CMC Steel Group. Co-Steel Inc. Marion Steel. North Star Steel Co. Nucor Steel. Rebar Trade Action Coalition.

Commerce case No.	Commission case No.	Product/country	Petitioners/supporters
			Riverview Steel.
			Sheffield Steel.
			TAMCO.
			TXI-Chaparral Steel Co.
A–823–810	731–TA–894	Ammonium Nitrate/Ukraine	Agrium.
			Air Products and Chemicals.
			Committee for Fair Ammonium Nitrate Trade.
			El Dorado Chemical.
			LaRoche Industries.
			Mississippi Chemical.
			Nitram.
			Prodica.
A–823–811	731–TA–908	Hot-Rolled Steel Products/Ukraine	Bethlehem Steel.
			Gallatin Steel.
			Independent Steelworkers.
			IPSCO.
			LTV Steel.
			National Steel.
			Nucor.
			Rouge Steel Co.
			Steel Dynamics.
			US Steel.
			United Steelworkers of America.
			WCI Steel Inc.
			Weirton Steel.
			Wheeling-Pittsburgh Steel Corp.
A–823–812	731–TA–962	Carbon and Certain Alloy Steel Wire Rod/ Ukraine.	AmeriSteel.
			Birmingham Steel.
			Cascade Steel Rolling Mills.
			Connecticut Steel Corp.
			Co-Steel Raritan.
			GS Industries.
			Keystone Consolidated Industries.
			North Star Steel Texas.
			Nucor Steel-Nebraska (a division of Nucor Corp).
			Republic Technologies International.
			Rocky Mountain Steel Mills.
A–831–801	731–TA–340A	Solid Urea/Armenia	Agrico Chemical.
			American Cyanamid.
			CF Industries.
			First Mississippi.
			Mississippi Chemical.
			Terra International.
			WR Grace.
A–834–806	731–TA–902	Hot-Rolled Steel Products/Kazakhstan	Bethlehem Steel.
			Gallatin Steel.
			Independent Steelworkers.
			IPSCO.
			LTV Steel.
			National Steel.
			Nucor.
			Rouge Steel Co.
			Steel Dymanics.
			US Steel.
			United Steelworkers of America.
			WCI Steel Inc.
			Weirton Steel.
			Wheeling-Pittsburgh Steel Corp.
A–834–807	731–TA–930	Silicomanganese/Kazakhstan	Eramet Marietta.
			Paper, Allied-Industrial, Chemical and Energy Workers International Union, Local 5–0639.
A–841–804	731–TA–879	Steel Concrete Reinforcing Bar/Moldova	AB Steel Mill Inc.
			AmeriSteel.
			Auburn Steel.
			Birmingham Steel.
			Border Steel.
			Cascade Steel Rolling Mills Inc.
			CMC Steel Group.
			Co-Steel Inc.
			Marion Steel.
			North Star Steel Co.
			Nucor Steel.

Commerce case No.	Commission case No.	Product/country	Petitioners/supporters
A–841–805	731–TA–959	Carbon and Certain Alloy Steel Wire Rod/ Moldova.	Rebar Trade Action Coalition. Riverview Steel. Sheffield Steel. TAMCO. TXI-Chaparral Steel Co. AmeriSteel. Birmingham Steel. Cascade Steel Rolling Mills. Connecticut Steel Corp. Co-Steel Raritan. GS Industries. Keystone Consolidated Industries. North Star Steel Texas. Nucor Steel-Nebraska (a division of Nucor Corp). Republic Technologies International. Rocky Mountain Steel Mills.
A–842–801	731–TA–340F	Solid Urea/Tajikistan	Agrico Chemical. American Cyanamid. CF Industries. First Mississippi. Mississippi Chemical. Terra International. WR Grace.
A–843–801	731–TA–340G	Solid Urea/Turkmenistan	Agrico Chemical. American Cyanamid. CF Industries. First Mississippi. Mississippi Chemical. Terra International. WR Grace.
A–843–802	731–TA–539	Uranium/Kazakhstan	Ferret Exploration. First Holding. Geomex Minerals. IMC Fertilizer. Malapai Resources. Oil, Chemical and Atomic Workers. Pathfinder Mines. Power Resources. Rio Algom Mining. Solution Mining. Total Minerals. Umetco Minerals. Uranium Resources.
A–843–804	731–TA–566	Ferrosilicon/Kazakhstan	AIMCOR. Alabama Silicon. American Alloys. Globe Metallurgical. Oil, Chemical and Atomic Workers (Local 389). Silicon Metaltech. United Autoworkers of America (Local 523). United Steelworkers of America (Locals 2528, 3081, 5171 and 12646).
A–844–801	731–TA–340I	Solid Urea/Uzbekistan	Agrico Chemical. American Cyanamid. CF Industries. First Mississippi. Mississippi Chemical. Terra International. WR Grace.
A–844–802	731–TA–539–F	Uranium/Uzbekistan	Ferret Exploration. First Holding. Geomex Minerals. IMC Fertilizer. Malapai Resources. Oil, Chemical and Atomic Workers. Pathfinder Mines. Power Resources. Rio Algom Mining. Solution Mining. Total Minerals. Umetco Minerals. Uranium Resources.

Commerce case No.	Commission case No.	Product/country	Petitioners/supporters
A–851–802	731–TA–846	Small-Diameter Carbon Steel Seamless Pipe/ Czech Republic.	Koppel Steel. North Star Steel. Sharon Tube. Timken. US Steel. United Steelworkers of America. USS/Kobe. Vision Metals' Gulf States Tube.
C–122–404	701–TA–224	Live Swine/Canada	National Pork Producers Council. Wilson Foods.
C–122–805	701–TA–297	Steel Rails/Canada	Bethlehem Steel. CF&I Steel.
C–122–815	701–TA–309–A	Alloy Magnesium/Canada	Magnesium Corporation of America.
C–122–815	701–TA–309–B	Pure Magnesium/Canada	Magnesium Corporation of America.
C–122–839	701–TA–414	Softwood Lumber/Canada	71 Lumber Co. Almond Bros Lbr Co. Anthony Timberlands. Balfour Lbr Co. Ball Lumber. Banks Lumber Company. Barge Forest Products Co. Beadles Lumber Co. Bearden Lumber. Bennett Lumber. Big Valley Band Mill. Bighorn Lumber Co Inc. Blue Mountain Lumber. Buddy Bean Lumber. Burgin Lumber Co Ltd. Burt Lumber Company. C&D Lumber Co. Ceda-Pine Veneer. Cersosimo Lumber Co Inc. Charles Ingram Lumber Co Inc. Charleston Heart Pine. Chesterfield Lumber. Chips. Chocorua Valley Lumber Co. Claude Howard Lumber. Clearwater Forest Industries. CLW Inc. CM Tucker Lumber Corp. Coalition for Fair Lumber Imports Executive Committee. Cody Lumber Co. Collins Pine Co. Collums Lumber. Columbus Lumber Co. Contoocook River Lumber. Conway Guiteau Lumber. Cornwright Lumber Co. Crown Pacific. Daniels Lumber Inc. Dean Lumber Co Inc. Deltic Timber Corporation. Devils Tower Forest Products. DiPrizio Pine Sales. Dorchester Lumber Co. DR Johnson Lumber. East Brainerd Lumber Co. East Coast Lumber Company. Eas-Tex Lumber. ECK Wood Products. Ellingson Lumber Co. Elliott Sawmilling. Empire Lumber Co. Evergreen Forest Products. Excalibur Shelving Systems Inc. Exley Lumber Co. FH Stoltze Land & Lumber Co. FL Turlington Lbr Co Inc. Fleming Lumber. Flippo Lumber. Floragen Forest Products.

Commerce case No.	Commission case No.	Product/country	Petitioners/supporters
			Frank Lumber Co. Franklin Timber Co. Fred Tebb & Sons. Fremont Sawmill. Frontier Resources. Garrison Brothers Lumber Co and Subsidiaries. Georgia Lumber. Gilman Building Products. Godfrey Lumber. Granite State Forest Prod Inc. Great Western Lumber Co. Greenville Molding Inc. Griffin Lumber Company. Guess Brothers Lumber. Gulf Lumber. Gulf States Paper. Guy Bennett Lumber. Hampton Resources. Hancock Lumber. Hankins Inc. Hankins Lumber Co. Harrigan Lumber. Harwood Products. Haskell Lumber Inc. Hatfield Lumber. Hedstrom Lumber. Herrick Millwork Inc. HG Toler & Son Lumber Co Inc. HG Wood Industries LLC. Hogan & Storey Wood Prod. Hogan Lumber Co. Hood Industries. HS Hofler & Sons Lumber Co Inc. Hubbard Forest Ind Inc. HW Culp Lumber Co. Idaho Veneer Co. Industrial Wood Products. Intermountain Res LLC. International Paper. J Franklin Jones Lumber Co Inc. Jack Batte & Sons Inc. Jasper Lumber Company. JD Martin Lumber Co. JE Jones Lumber Co. Jerry G Williams & Sons. JH Knighton Lumber Co. Johnson Lumber Company. Jordan Lumber & Supply. Joseph Timber Co. JP Haynes Lbr Co Inc. JV Wells Inc. JW Jones Lumber. Keadle Lumber Enterprises. Keller Lumber. King Lumber Co. Konkolville Lumber. Langdale Forest Products. Laurel Lumber Company. Leavitt Lumber Co. Leesville Lumber Co. Limington Lumber Co. Longview Fibre Co. Lovell Lumber Co Inc. M Kendall Lumber Co. Manke Lumber Co. Marriner Lumber Co. Mason Lumber. MB Heath & Sons Lumber Co. MC Dixon Lumber Co Inc. Mebane Lumber Co Inc. Metcalf Lumber Co Inc. Millry Mill Co Inc. Moose Creek Lumber Co.

Commerce case No.	Commission case No.	Product/country	Petitioners/supporters
			Moose River Lumber. Morgan Lumber Co Inc. Mount Yonah Lumber Co. Nagel Lumber. New Kearsarge Corp. New South. Nicolet Hardwoods. Nieman Sawmills SD. Nieman Sawmills WY. North Florida. Northern Lights Timber & Lumber. Northern Neck Lumber Co. Ochoco Lumber Co. Olon Belcher Lumber Co. Owens and Hurst Lumber. Packaging Corp of America. Page & Hill Forest Products. Paper, Allied-Industrial, Chemical and Energy Workers International Union. Parker Lumber. Pate Lumber Co Inc. PBS Lumber. Pedigo Lumber Co. Piedmont Hardwood Lumber Co. Pine River Lumber Co. Pinecrest Lumber Co. Pleasant River Lumber Co. Pleasant Western Lumber Inc. Plum Creek Timber. Pollard Lumber. Portac. Potlatch. Potomac Supply. Precision Lumber Inc. Pruitt Lumber Inc. R Leon Williams Lumber Co. RA Yancey Lumber. Rajala Timber Co. Ralph Hamel Forest Products. Randy D Miller Lumber. Rappahannock Lumber Co. Regulus Stud Mills Inc. Riley Creek Lumber. Roanoke Lumber Co. Robbins Lumber. Robertson Lumber. Roseburg Forest Products Co. Rough & Ready. RSG Forest Products. Rushmore Forest Products. RY Timber Inc. Sam Mabry Lumber Co. Scotch Lumber. SDS Lumber Co. Seacoast Mills Inc. Seago Lumber. Seattle-Snohomish. Seneca Sawmill. Shaver Wood Products. Shearer Lumber Products. Shuqualak Lumber. SI Storey Lumber. Sierra Forest Products. Sierra Pacific Industries. Sigfridson Wood Products. Silver City Lumber Inc. Somers Lbr & Mfg Inc. South & Jones. South Coast. Southern Forest Industries Inc. Southern Lumber. St Laurent Forest Products. Starfire Lumber Co. Steely Lumber Co Inc.

Commerce case No.	Commission case No.	Product/country	Petitioners/supporters
			Stimson Lumber.
			Summit Timber Co.
			Sundance Lumber.
			Superior Lumber.
			Swanson Superior Forest Products Inc.
			Swift Lumber.
			Tamarack Mill.
			Taylor Lumber & Treating Inc.
			Temple-Inland Forest Products.
			Thompson River Lumber.
			Three Rivers Timber.
			Thrift Brothers Lumber Co Inc.
			Timco Inc.
			Tolleson Lumber.
			Toney Lumber.
			TR Miller Mill Co.
			Tradewinds of Virginia Ltd.
			Travis Lumber Co.
			Tree Source Industries Inc.
			Tri-State Lumber.
			TTT Studs.
			United Brotherhood of Carpenters and Joiners.
			Viking Lumber Co.
			VP Kiser Lumber Co.
			Walton Lumber Co Inc.
			Warm Springs Forest Products.
			Westvaco Corp.
			Wilkins, Kaiser & Olsen Inc.
			WM Shepherd Lumber Co.
			WR Robinson Lumber Co Inc.
			Wrenn Brothers Inc.
			Wyoming Sawmills.
			Yakama Forest Products.
			Younce & Ralph Lumber Co Inc.
			Zip-O-Log Mills Inc.
C–122–841	701–TA–418	Carbon and Certain Alloy Steel Wire Rod/Canada.	AmeriSteel.
			Birmingham Steel.
			Cascade Steel Rolling Mills.
			Connecticut Steel Corp.
			Co-Steel Raritan.
			GS Industries.
			Keystone Consolidated Industries.
			North Star Steel Texas.
			Nucor Steel-Nebraska (a division of Nucor Corp).
			Republic Technologies International.
			Rocky Mountain Steel Mills.
C–122–848	701–TA–430B	Hard Red Spring Wheat/Canada	North Dakota Wheat Commission.
C–201–505	701–TA–265	Porcelain-on-Steel Cooking Ware/Mexico	General Housewares.
C–201–810	701–TA–325	Cut-to-Length Carbon Steel Plate/Mexico	Bethlehem Steel.
			California Steel Industries.
			CitiSteel USA Inc.
			Geneva Steel.
			Gulf States Steel.
			Inland Steel Industries.
			Lukens Steel.
			National Steel.
			Nextech.
			Sharon Steel.
			Theis Precision Steel.
			Thompson Steel.
			US Steel.
			United Steelworkers of America.
C–307–804	303–TA–21	Gray Portland Cement and Clinker/Venezuela	Florida Crushed Stone.
			Southdown.
			Tarmac America.
C–307–808	303–TA–23	Ferrosilicon/Venezuela	AIMCOR.
			Alabama Silicon.
			American Alloys.
			Globe Metallurgical.
			Oil, Chemical and Atomic Workers (Local 389).
			Silicon Metaltech.

Commerce case No.	Commission case No.	Product/country	Petitioners/supporters
			United Autoworkers of America (Local 523). United Steelworkers of America (Locals 2528, 3081, 5171 and 12646).
C–333–401	701–TA–E	Cotton Shop Towels/Peru	No case at the Commission; Commerce service list identifies: Durafab. Kleen-Tex Industries. Lewis Eckert Robb. Milliken. Pavis & Harcourt.
C–351–037	104–TAA–21	Cotton Yarn/Brazil	American Yarn Spinners Association. Harriet & Henderson Yarns. LaFar Industries.
C–351–504	701–TA–249	Heavy Iron Construction Castings/Brazil	Alhambra Foundry. Allegheny Foundry. Bingham & Taylor. Campbell Foundry. Charlotte Pipe & Foundry. Deeter Foundry. East Jordan Foundry. Le Baron Foundry. Municipal Castings. Neenah Foundry. Opelika Foundry. Pinkerton Foundry. Tyler Pipe. US Foundry & Manufacturing. Vulcan Foundry.
C–351–604	701–TA–269	Brass Sheet and Strip/Brazil	Allied Industrial Workers of America. American Brass. Bridgeport Brass. Chase Brass & Copper. Hussey Copper. International Association of Machinists & Aerospace Workers. Mechanics Educational Society of America (Local 56). The Miller Company. Olin. Revere Copper Products. United Steelworkers of America.
C–351–818	701–TA–320	Cut-to-Length Carbon Steel Plate/Brazil	Bethlehem Steel. California Steel Industries. CitiSteel USA Inc. Geneva Steel. Gulf States Steel. Inland Steel Industries. Lukens Steel. National Steel. Nextech. Sharon Steel. Theis Precision Steel. Thompson Steel. US Steel. United Steelworkers of America.
C–351–829	701–TA–384	Hot-Rolled Carbon Steel Flat Products/Brazil	Acme Steel. Bethlehem Steel. California Steel Industries. Gallatin Steel. Geneva Steel. Gulf States Steel. Independent Steelworkers. IPSCO. Ispat/Inland. LTV Steel. National Steel. Nucor. Rouge Steel Co. Steel Dynamics. US Steel. United Steelworkers of America. WCI Steel. Weirton Steel.

Commerce case No.	Commission case No.	Product/country	Petitioners/supporters
			Wheeling-Pittsburgh Steel Corp.
C–351–833	701–TA–417	Carbon and Certain Alloy Steel Wire Rod/ Brazil.	AmeriSteel. Birmingham Steel. Cascade Steel Rolling Mills. Connecticut Steel Corp. Co-Steel Raritan. GS Industries. Keystone Consolidated Industries. North Star Steel Texas. Nucor Steel-Nebraska (a division of Nucor Corp). Republic Technologies International. Rocky Mountain Steel Mills.
C–357–004	701–TA–A	Carbon Steel Wire Rod/Argentina	Atlantic Steel. Continental Steel. Georgetown Steel. North Star Steel. Raritan River Steel.
C–357–813	701–TA–402	Honey/Argentina	AH Meyer & Sons. Adee Honey Farms. Althoff Apiaries. American Beekeeping Federation. American Honey Producers Association. Anderson Apiaries. Arroyo Apiaries. Artesian Honey Producers. B Weaver Apiaries. Bailey Enterprises. Barkman Honey. Basler Honey Apiary. Beals Honey. Bears Paw Apiaries. Beaverhead Honey. Bee Biz. Bee Haven Honey. Belliston Brothers Apiaries. Big Sky Honey. Bill Rhodes Honey. Richard E Blake. Curt Bronnenbery. Brown's Honey Farms. Brumley's Bees. Buhmann Apiaries. Carys Honey Farms. Chaparrel Honey. Charles Apiaries. Mitchell Charles. Collins Honey. Conor Apiaries. Coy's Honey Farm. Dave Nelson Apiaries. Delta Bee. Eisele's Pollination & Honey. Ellingsoa's. Elliott Curtis & Sons. Charles L Emmons, Sr. Gause Honey. Gene Brandi Apiaries. Griffith Honey. Haff Apiaries. Hamilton Bee Farms. Hamilton Honey. Happie Bee. Harvest Honey. Harvey's Honey. Hiatt Honey. Hoffman Honey. Hollman Apiaries. Honey House. Honeybee Apiaries. Gary M Honl. Rand William Honl and Sydney Jo Honl. James R & Joann Smith Trust. Jaynes Bee Products.

Commerce case No.	Commission case No.	Product/country	Petitioners/supporters
			Johnston Honey Farms. Larry Johnston. Ke-An Honey. Kent Honeybees. Lake-Indianhead Honey Farms. Lamb's Honey Farm. Las Flores Apiaries. Mackrill Honey Farms & Sales. Raymond Marquette. Mason & Sons Honey. McCoy's Sunny South Apiaries. Merrimack Valley Apiaries & Evergreen Honey. Met 2 Honey Farm. Missouri River Honey. Mitchell Brothers Honey. Monda Honey Farm. Montana Dakota Honey. Northern Bloom Honey. Noye's Apiaries. Oakes Honey. Oakley Honey Farms. Old Mill Apiaries. Opp Honey. Oro Dulce. Peterson's "Naturally Sweet" Honey. Potoczak Bee Farms. Price Apiaries. Pure Sweet Honey Farms. Robertson Pollination Service. Robson Honey. William Robson. Rosedale Apiaries. Ryan Apiaries. Schmidt Honey Farms. Simpson Apiaries. Sioux Honey Association. Smoot Honey. Solby Honey. Stahlman Apiaries. Steve E Parks Apiaries. Stroope Bee & Honey. T&D Honey Bee. Talbott's Honey. Terry Apiaries. Thompson Apiaries. Triple A Farm. Tropical Blossom Honey. Tubbs Apiaries. Venable Wholesale. Walter L Wilson Buzz 76 Apiaries. Wiebersiek Honey Farms. Wilmer Farms. Brent J Woodworth. Wooten's Golden Queens. Yaddof Apiaries.
C–357–815	701–TA–404	Hot-Rolled Steel Products/Argentina	Bethlehem Steel. Gallatin Steel. Independent Steelworkers. IPSCO. LTV Steel. National Steel. Nucor. Rouge Steel Co. Steel Dynamics. US Steel. United Steelworkers of America. WCI Steel Inc. Weirton Steel. Wheeling-Pittsburgh Steel Corp.
C–401–401	701–TA–231	Cold-Rolled Carbon Steel Flat Products/Sweden.	Bethlehem Steel. Chaparral. US Steel.
C–401–804	701–TA–327	Cut-to-Length Carbon Steel Plate/Sweden	Bethlehem Steel.

Commerce case No.	Commission case No.	Product/country	Petitioners/supporters
			California Steel Industries. CitiSteel USA Inc. Geneva Steel. Gulf States Steel. Inland Steel Industries. Lukens Steel. National Steel. Nextech. Sharon Steel. Theis Precision Steel. Thompson Steel. US Steel. United Steelworkers of America.
C–403–802	701–TA–302	Fresh and Chilled Atlantic Salmon/Norway	Heritage Salmon. The Coalition for Fair Atlantic Salmon Trade.
C–408–046	104–TAA–7	Sugar/EU	No petition at the Commission;. Commerce service list identifies:. AJ Yates. Alexander & Baldwin. American Farm Bureau Federation. American Sugar Cane League. American Sugarbeet Growers Association. Amstar Sugar. Florida Sugar Cane League. Florida Sugar Marketing and Terminal Association. H&R Brokerage. Hawaiian Agricultural Research Center. Leach Farms. Michigan Farm Bureau. Michigan Sugar. Rio Grande Valley Sugar Growers Association. Sugar Cane Growers Cooperative of Florida. Talisman Sugar. US Beet Sugar Association. United States Beet Sugar Association. United States Cane Sugar Refiners' Association.
C–412–815	701–TA–328	Cut-to-Length Carbon Steel Plate/United Kingdom.	Bethlehem Steel. California Steel Industries. Geneva Steel. Gulf States Steel. Inland Steel Industries. Lukens Steel. National Steel. Nextech. Sharon Steel. Theis Precision Steel. Thompson Steel. US Steel. United Steelworkers of America.
C–412–821	701–TA–412	Low Enriched Uranium/United Kingdom	United States Enrichment Corp. USEC Inc.
C–421–601	701–TA–278	Fresh Cut Flowers/Netherlands	Burdette Coward. California Floral Council. Floral Trade Council. Florida Flower Association. Gold Coast Uanko Nursery. Hollandia Wholesale Florist. Manatee Fruit. Monterey Flower Farms. Topstar Nursery.
C–421–809	701–TA–411	Low Enriched Uranium/Netherlands	United States Enrichment Corp. USEC Inc.
C–423–806	701–TA–319	Cut-to-Length Carbon Steel Plate/Belgium	Bethlehem Steel. California Steel Industries. CitiSteel USA Inc. Geneva Steel. Gulf States Steel. Inland Steel Industries. Lukens Steel. National Steel. Nextech.

Commerce case No.	Commission case No.	Product/country	Petitioners/supporters
			Sharon Steel. Theis Precision Steel. Thompson Steel. US Steel. United Steelworkers of America.
C–423–809	701–TA–376	Stainless Steel Plate in Coils/Belgium	Allegheny Ludlum. Armco Steel. Lukens Steel. North American Stainless. United Steelworkers of America.
C–427–603	701–TA–270	Brass Sheet and Strip/France	Allied Industrial Workers of America. American Brass. Bridgeport Brass. Chase Brass & Copper. Hussey Copper. International Association of Machinists & Aerospace Workers. Mechanics Educational Society of America (Local 56). The Miller Company. Olin. Revere Copper Products. United Steelworkers of America.
C–427–805	701–TA–315	Hot-Rolled Lead and Bismuth Carbon Steel Products/France.	Bethlehem Steel. Inland Steel Industries. USS/Kobe Steel.
C–427–810	701–TA–348	Corrosion-Resistant Carbon Steel Flat Products/France.	Armco Steel. Bethlehem Steel. California Steel Industries. Geneva Steel. Gulf States Steel. Inland Steel Industries. LTV Steel. Lukens Steel. National Steel. Nextech. Rouge Steel Co. Sharon Steel. Theis Precision Steel. Thompson Steel. US Steel. United Steelworkers of America. WCI Steel. Weirton Steel.
C–427–815	701–TA–380	Stainless Steel Sheet and Strip/France	Allegheny Ludlum. Armco Steel. Bethlehem Steel. Butler Armco Independent Union. Carpenter Technology Corp. North American Stainless. United Steelworkers of America. Zanesville Armco Independent Organization.
C–427–817	701–TA–387	Cut-to-Length Carbon Steel Plate/France	Bethlehem Steel. Geneva Steel. IPSCO Steel. National Steel. US Steel. United Steelworkers of America.
C–427–819	701–TA–409	Low Enriched Uranium/France	United States Enrichment Corp. USEC Inc.
C–428–817	701–TA–340	Cold-Rolled Carbon Steel Flat Products/Germany.	Armco Steel. Bethlehem Steel. California Steel Industries. Gulf States Steel. Inland Steel Industries. LTV Steel. National Steel. Nextech. Rouge Steel Co. Sharon Steel. Theis Precision Steel. Thompson Steel. US Steel. United Steelworkers of America.

Commerce case No.	Commission case No.	Product/country	Petitioners/supporters
C–428–817	701–TA–349	Corrosion-Resistant Carbon Steel Flat Products/Germany.	WCI Steel. Weirton Steel. Armco Steel. Bethlehem Steel. California Steel Industries. Geneva Steel. Gulf States Steel. Inland Steel Industries. LTV Steel. Lukens Steel. National Steel. Nextech. Rouge Steel Co. Sharon Steel. Theis Precision Steel. Thompson Steel. US Steel. United Steelworkers of America.
C–428–817	701–TA–322	Cut-to-Length Carbon Steel Plate/Germany	WCI Steel. Weirton Steel. Bethlehem Steel. California Steel Industries. Geneva Steel. Gulf States Steel. Inland Steel Industries. Lukens Steel. National Steel. Nextech. Sharon Steel. Theis Precision Steel. Thompson Steel. US Steel. United Steelworkers of America.
C–428–829	701–TA–410	Low Enriched Uranium/Germany	United States Enrichment Corp. USEC Inc.
C–437–805	701–TA–426	Sulfanilic Acid/Hungary	Nation Ford Chemical.
C–469–004	701–TA–178	Stainless Steel Wire Rod/Spain	AL Tech Specialty Steel. NT Armco Steel. Carpenter Technology. Colt Industries. Cyclops. Guterl Special Steel. Joslyn Stainless Steels. Republic Steel.
C–469–804	701–TA–326	Cut-to-Length Carbon Steel Plate/Spain	Bethlehem Steel. California Steel Industries. CitiSteel USA Inc. Geneva Steel. Gulf States Steel. Inland Steel Industries. Lukens Steel. National Steel. Nextech. Sharon Steel. Theis Precision Steel. Thompson Steel. US Steel. United Steelworkers of America.
C–475–812	701–TA–355	Grain-Oriented Silicon Electrical Steel/Italy	Allegheny Ludlum. Armco Steel. Butler Armco Independent Union. United Steelworkers of America. Zanesville Armco Independent Union.
C–475–815	701–TA–362	Seamless Pipe/Italy	Koppel Steel. Quanex. Timken. United States Steel.
C–475–817	701–TA–364	Oil Country Tubular Goods/Italy	IPSCO. Koppel Steel. Lone Star Steel. Maverick Tube. Newport Steel. North Star Steel. US Steel.

Commerce case No.	Commission case No.	Product/country	Petitioners/supporters
			USS/Kobe.
C–475–819	701–TA–365	Pasta/Italy	A Zerega's Sons. American Italian Pasta. Borden. D Merlino & Sons. Dakota Growers Pasta. Foulds. Gilster-Mary Lee. Gooch Foods. Hershey Foods. LaRinascente Macaroni Co. Pasta USA. Philadelphia Macaroni. ST Specialty Foods.
C–475–821	701–TA–373	Stainless Steel Wire Rod/Italy	AL Tech Specialty Steel. Carpenter Technology. Republic Engineered Steels. Talley Metals Technology. United Steelworkers of America.
C–475–823	701–TA–377	Stainless Steel Plate in Coils/Italy	Allegheny Ludlum. Armco Steel. J&L Specialty Steel. Lukens Steel. North American Stainless. United Steelworkers of America.
C–475–825	701–TA–381	Stainless Steel Sheet and Strip/Italy	Allegheny Ludlum. Armco Steel. Bethlehem Steel. Butler Armco Independent Union. Carpenter Technology Corp. J&L Specialty Steel. North American Stainless. United Steelworkers of America. Zanesville Armco Independent Organization.
C–475–827	701–TA–390	Cut-to-Length Carbon Steel Plate/Italy	Bethlehem Steel. CitiSteel USA Inc. Geneva Steel. Gulf States Steel. IPSCO Steel. National Steel. US Steel. United Steelworkers of America.
C–475–830	701–TA–413	Stainless Steel Bar/Italy	Carpenter Technology. Crucible Specialty Metals. Electralloy. Empire Specialty Steel. Republic Technologies International. Slater Steels. United Steelworkers of America.
C–489–502	701–TA–253	Welded Carbon Steel Pipe and Tube/Turkey	Allied Tube & Conduit. American Tube. Bernard Epps. Bock Industries. Bull Moose Tube. Central Steel Tube. Century Tube. Copperweld Tubing. Cyclops. Hughes Steel & Tube. Kaiser Steel. Laclede Steel. Maruichi American. Maverick Tube. Merchant Metals. Phoenix Steel. Pittsburgh Tube. Quanex. Sharon Tube. Southwestern Pipe. UNR-Leavitt. Welded Tube. Western Tube & Conduit. Wheatland Tube.
C–489–806	701–TA–366	Pasta/Turkey	A Zerega's Sons.

Commerce case No.	Commission case No.	Product/country	Petitioners/supporters
			American Italian Pasta.
			Borden.
			D Merlino & Sons.
			Dakota Growers Pasta.
			Foulds.
			Gilster-Mary Lee.
			Gooch Foods.
			Hershey Foods.
			LaRinascente Macaroni Co.
			Pasta USA.
			Philadelphia Macaroni.
			ST Specialty Foods.
C–507–501	N/A	Raw In-Shell Pistachios/Iran	Blackwell Land Co.
			Cal Pure Pistachios Inc.
			California Pistachio Commission.
			California Pistachio Orchards.
			Keenan Farms Inc.
			Kern Pistachio Hulling & Drying Co-Op.
			Los Rancheros de Poco Pedro.
			Pistachio Producers of California.
			TM Duche Nut Co Inc.
C–507–601	N/A	Roasted In-Shell Pistachios/Iran	Cal Pure Pistachios Inc.
			California Pistachio Commission.
			Keenan Farms Inc.
			Kern Pistachio Hulling & Drying Co-Op.
			Pistachio Producers of California.
			TM Duche Nut Co Inc.
C–508–605	701–TA–286	Industrial Phosphoric Acid/Israel	Albright & Wilson.
			FMC.
			Hydrite Chemical.
			Monsanto.
			Stauffer Chemical.
C–533–063	303–TA–13	Iron Metal Castings/India	Campbell Foundry.
			Le Baron Foundry.
			Municipal Castings.
			Neenah Foundry.
			Pinkerton Foundry.
			US Foundry & Manufacturing.
			Vulcan Foundry.
C–533–807	701–TA–318	Sulfanilic Acid/India	R–M Industries.
C–533–818	701–TA–388	Cut-to-Length Carbon Steel Plate/India	Bethlehem Steel.
			CitiSteel USA Inc.
			Geneva Steel.
			Gulf States Steel.
			IPSCO Steel.
			National Steel.
			Tuscaloosa Steel.
			US Steel.
			United Steelworkers of America.
C–533–821	701–TA–405	Hot-Rolled Steel Products/India	Bethlehem Steel.
			Gallatin Steel.
			Independent Steelworkers.
			IPSCO.
			LTV Steel.
			National Steel.
			Nucor.
			Rouge Steel Co.
			Steel Dynamics.
			US Steel.
			United Steelworkers of America.
			WCI Steel Inc.
			Weirton Steel.
			Wheeling-Pittsburgh Steel Corp.
C–533–825	701–TA–415	Polyethylene Terephthalate Film, Sheet and Strip (PET Film)/India.	DuPont Teijin Films.
			Mitsubishi Polyester Film LLC.
			SKC America Inc.
			Toray Plastics (America).
C–533–829	701–TA–432	Prestressed Concrete Steel Wire Strand/India	American Spring Wire Corp.
			Insteel Wire Products Co.
			Sivaco Georgia LLC.
			Strand Tech Martin Inc.
			Sumiden Wire Products Corp.
C–533–839	701–TA–437	Carbazole Violet Pigment 23/India	Allegheny Color Corp.
			Barker Fine Color Inc.

Commerce case No.	Commission case No.	Product/country	Petitioners/supporters
			Clariant Corp. Nation Ford Chemical Co. Sun Chemical Co.
C–533–844	701–TA–442	Certain Lined Paper School Supplies/India	Fay Paper Products Inc. MeadWestvaco Consumer & Office Products. Norcom Inc. Pacon Corp. Roaring Spring Blank Book Co. Top Flight Inc. United Steel, Paper and Forestry, Rubber, Manufacturing, Energy, Allied Industrial and Service Workers International Union, AFL–CIO–CLC (USW).
C–535–001	701–TA–202	Cotton Shop Towels/Pakistan	Milliken.
C–549–818	701–TA–408	Hot-Rolled Steel Products/Thailand	Bethlehem Steel. Gallatin Steel. Independent Steelworkers. IPSCO. LTV Steel. National Steel. Nucor. Rouge Steel Co. Steel Dynamics. US Steel. United Steelworkers of America. WCI Steel Inc. Weirton Steel. Wheeling-Pittsburgh Steel Corp.
C–560–806	701–TA–389	Cut-to-Length Carbon Steel Plate/Indonesia	Bethlehem Steel. CitiSteel USA Inc. Geneva Steel. Gulf States Steel. IPSCO Steel. National Steel. Tuscaloosa Steel. US Steel. United Steelworkers of America.
C–560–813	701–TA–406	Hot-Rolled Steel Products/Indonesia	Bethlehem Steel. Gallatin Steel. Independent Steelworkers. IPSCO. LTV Steel. National Steel. Nucor. Rouge Steel Co. Steel Dynamics. US Steel. United Steelworkers of America. WCI Steel Inc. Weirton Steel. Wheeling-Pittsburgh Steel Corp.
C–560–819	701–TA–443	Certain Lined Paper School Supplies/Indonesia.	Fay Paper Products Inc. MeadWestvaco Consumer & Office Products. Norcom Inc. Pacon Corp. Roaring Spring Blank Book Co. Top Flight Inc. United Steel, Paper and Forestry, Rubber, Manufacturing, Energy, Allied Industrial and Service Workers International Union, AFL–CIO–CLC (USW).
C–580–602	701–TA–267	Top-of-the-Stove Stainless Steel Cooking Ware/Korea.	Farberware. Regal Ware. Revere Copper & Brass. WearEver/Proctor Silex.
C–580–818	701–TA–342	Cold-Rolled Carbon Steel Flat Products/Korea	Armco Steel. Bethlehem Steel. California Steel Industries. Gulf States Steel. Inland Steel Industries. LTV Steel. National Steel. Nextech. Rouge Steel Co.

Commerce case No.	Commission case No.	Product/country	Petitioners/supporters
C–580–818	701–TA–350	Corrosion-Resistant Carbon Steel Flat Products/Korea.	Sharon Steel. Theis Precision Steel. Thompson Steel. US Steel. United Steelworkers of America. WCI Steel. Weirton Steel.
C–580–835	701–TA–382	Stainless Steel Sheet and Strip/Korea	Armco Steel. Bethlehem Steel. California Steel Industries. Geneva Steel. Gulf States Steel. Inland Steel Industries. LTV Steel. Lukens Steel. National Steel. Nextech. Rouge Steel Co. Sharon Steel. Theis Precision Steel. Thompson Steel. US Steel. United Steelworkers of America. WCI Steel. Weirton Steel.
C–580–837	701–TA–391	Cut-to-Length Carbon Steel Plate/Korea	Allegheny Ludlum. Armco Steel. Bethlehem Steel. Butler Armco Independent Union. Carpenter Technology Corp. J&L Specialty Steel. North American Stainless. United Steelworkers of America. Zanesville Armco Independent Organization.
C–580–842	701–TA–401	Structural Steel Beams/Korea	Bethlehem Steel. CitiSteel USA Inc. Geneva Steel. Gulf States Steel. IPSCO Steel. National Steel. Tuscaloosa Steel. US Steel. United Steelworkers of America.
C–580–851	701–TA–431	DRAMs and DRAM Modules/Korea	Northwestern Steel and Wire. Nucor. Nucor-Yamato Steel. TXI-Chaparral Steel. United Steelworkers of America.
C–583–604	701–TA–268	Top-of-the-Stove Stainless Steel Cooking Ware/Taiwan.	Dominion Semiconductor LLC/Micron Technology Inc. Infineon Technologies Richmond LP. Micron Technology Inc.
C–791–806	701–TA–379	Stainless Steel Plate in Coils/South Africa	Farberware. Regal Ware. Revere Copper & Brass. WearEver/Proctor Silex.
C–791–810	701–TA–407	Hot-Rolled Steel Products/South Africa	Allegheny Ludlum. Armco Steel. J&L Specialty Steel. Lukens Steel. North American Stainless. United Steelworkers of America.
			Bethlehem Steel. Gallatin Steel. Independent Steelworkers. IPSCO. LTV Steel. National Steel. Nucor. Rouge Steel Co. Steel Dynamics. US Steel. United Steelworkers of America. WCI Steel Inc.

Commerce case No.	Commission case No.	Product/country	Petitioners/supporters
			Weirton Steel. Wheeling-Pittsburgh Steel Corp.
A–331–802	731–TA–1065	Certain Frozen Warmwater Shrimp and Prawns/Ecuador.	
A–351–838	731–TA–1063	Certain Frozen Warmwater Shrimp and Prawns/Brazil.	
A–533–840	731–TA–1066	Certain Frozen Warmwater Shrimp and Prawns/India.	
A–549–822	731–TA–1067	Certain Frozen Warmwater Shrimp and Prawns/Thailand.	
A–552–802	731–TA–1068	Certain Frozen Warmwater Shrimp and Prawns/Vietnam.	
A–570–893	731–TA–1064	Certain Frozen Warmwater Shrimp and Prawns/China.	Petitioners/Supporters for all six cases listed: Abadie, Al J. Abadie, Anthony. Abner, Charles. Abraham, Steven. Abshire, Gabriel J. Ackerman, Dale J. Acosta, Darryl L. Acosta, Jerry J Sr. Acosta, Leonard C. Acosta, Wilson Pula Sr. Adam, Denise T. Adam, Michael A. Adam, Richard B Jr Adam, Sherry P Adam, William E Adam, Alcide J Jr Adams, Dudley Adams, Elizabeth L Adams, Ervin Adams, Ervin Adams, George E Adams, Hursy J Adams, James Arthur Adams, Kelly Adams, Lawrence J Jr. Adams, Randy. Adams, Ritchie. Adams, Steven A. Adams, Ted J. Adams, Tim. Adams, Whitney P Jr. Agoff, Ralph J. Aguilar, Rikardo. Aguillard, Roddy G. Alario, Don Ray. Alario, Nat. Alario, Pete J. Alario, Timmy. Albert, Craig J. Albert, Junior J. Alexander, Everett O. Alexander, Robert F Jr. Alexie, Benny J. Alexie, Corkey A. Alexie, Dolphy. Alexie, Felix Jr. Alexie, Gwendolyn. Alexie, John J. Alexie, John V. Alexie, Larry J Sr. Alexie, Larry Jr. Alexie, Vincent L Jr. Alexis, Barry S. Alexis, Craig W. Alexis, Micheal. Alexis, Monique. Alfonso, Anthony E Jr. Alfonso, Jesse. Alfonso, Nicholas. Alfonso, Paul Anthony.

Commerce case No.	Commission case No.	Product/country	Petitioners/supporters
			Alfonso, Randy.
			Alfonso, Terry S Jr.
			Alfonso, Vernon Jr.
			Alfonso, Yvette.
			Alimia, Angelo A Jr.
			Allemand, Dean J.
			Allen, Annie.
			Allen, Carolyn Sue.
			Allen, Jackie.
			Allen, Robin.
			Allen, Wayne.
			Allen, Wilbur L.
			Allen, Willie J III.
			Allen, Willie Sr.
			Alphonso, John.
			Ancalade, Leo J.
			Ancar, Claudene.
			Ancar, Jerry T.
			Ancar, Joe C.
			Ancar, Merlin Sr.
			Ancar, William Sr.
			Ancelet, Gerald Ray.
			Anderson, Andrew David.
			Anderson, Ernest W.
			Anderson, Jerry.
			Anderson, John.
			Anderson, Lynwood.
			Anderson, Melinda Rene.
			Anderson, Michael Brian.
			Anderson, Ronald L Sr.
			Anderson, Ronald Louis Jr.
			Andonie, Miguel.
			Andrews, Anthony R.
			Andry, Janice M.
			Andry, Rondey S.
			Angelle, Louis.
			Anglada, Eugene Sr.
			Ansardi, Lester.
			Anselmi, Darren.
			Aparicio, Alfred.
			Aparicio, David.
			Aparicio, Ernest.
			Arabie, Georgia P.
			Arabie, Joseph.
			Arcement, Craig J.
			Arcement, Lester C.
			Arcemont, Donald Sr.
			Arceneaux, Matthew J.
			Arceneaux, Michael K.
			Areas, Christopher J.
			Armbruster, John III.
			Armbruster, Paula D.
			Armstrong, Jude Jr.
			Arnesen, George.
			Arnold, Lonnie L Jr.
			Arnona, Joseph T.
			Arnondin, Robert.
			Arthur, Brenda J.
			Assavedo, Floyd.
			Atwood, Gregory Kenneth.
			Au, Chow D.
			Au, Robert.
			Aucoin, Dewey F.
			Aucoin, Earl.
			Aucoin, Laine A.
			Aucoin, Perry J.
			Austin, Dennis.
			Austin, Dennis J.
			Authement, Brice.
			Authement, Craig L.
			Authement, Dion J.
			Authement, Gordon.
			Authement, Lance M.
			Authement, Larry.

Commerce case No.	Commission case No.	Product/country	Petitioners/supporters
			Authement, Larry Sr.
			Authement, Roger J.
			Authement, Sterling P.
			Autin, Bobby.
			Autin, Bruce J.
			Autin, Kenneth D.
			Autin, Marvin J.
			Autin, Paul F Jr.
			Autin, Roy.
			Avenel, Albert J Jr.
			Ba Wells, Tran Thi.
			Babb, Conny.
			Babin, Brad.
			Babin, Joey L.
			Babin, Klint.
			Babin, Molly.
			Babin, Norman J.
			Babineaux, Kirby.
			Babineaux, Vicki.
			Bach, Ke Van.
			Bach, Reo Long.
			Backman, Benny.
			Badeaux, Todd.
			Baham, Dewayne.
			Bailey, Albert.
			Bailey, Antoine III.
			Bailey, David B Sr.
			Bailey, Don.
			Baker, Clarence.
			Baker, Donald Earl.
			Baker, James.
			Baker, Kenneth.
			Baker, Ronald J.
			Balderas, Antonio.
			Baldwin, Richard Prentiss.
			Ballard, Albert.
			Ballas, Barbara A.
			Ballas, Charles J.
			Baltz, John F.
			Ban, John.
			Bang, Bruce K.
			Barbaree, Joe W.
			Barbe, Mark A and Cindy.
			Barber, Louie W Jr.
			Barber, Louie W Sr.
			Barbier, Percy T.
			Barbour, Raymond A.
			Bargainear, James E.
			Barisich, George A.
			Barisich, Joseph J.
			Barnette, Earl.
			Barnhill, Nathan.
			Barrios, Clarence.
			Barrios, Corbert J.
			Barrios, Corbert M.
			Barrios, David.
			Barrios, John.
			Barrios, Shane James.
			Barrois, Angela Gail.
			Barrois, Dana A.
			Barrois, Tracy James.
			Barrois, Wendell Jude Jr.
			Barthe, Keith Sr.
			Barthelemy, Allen M.
			Barthelemy, John A.
			Barthelemy, Rene T Sr.
			Barthelemy, Walter A Jr.
			Bartholomew, Mitchell.
			Bartholomew, Neil W.
			Bartholomew, Thomas E.
			Bartholomew, Wanda C.
			Basse, Donald J Sr.
			Bates, Mark.
			Bates, Ted Jr.

Commerce case No.	Commission case No.	Product/country	Petitioners/supporters
			Bates, Vernon Jr. Battle, Louis. Baudoin, Drake J. Baudoin, Murphy A. Baudouin, Stephen. Bauer, Gary. Baye, Glen P. Bean, Charles A. Beazley, William E. Becnel, Glenn J. Becnel, Kent. Beecher, Carold F. Beechler, Ronald. Bell, James E. Bell, Ronald A. Bellanger, Arnold. Bellanger, Clifton. Bellanger, Scott J. Belsome, Derrell M. Belsome, Karl M. Bennett, Cecil A Jr. Bennett, Gary Lynn. Bennett, Irin Jr. Bennett, James W Jr. Bennett, Louis. Benoit, Francis J. Benoit, Nicholas L. Benoit, Paula T. Benoit, Tenna J Jr. Benton, Walter T. Berger, Ray W. Bergeron, Alfred Scott. Bergeron, Jeff. Bergeron, Nolan A. Bergeron, Ulysses J. Bernard, Lamont L. Berner, Mark J. Berthelot, Gerard J Sr. Berthelot, James A. Berthelot, Myron J. Bertrand, Jerl C. Beverung, Keith J. Bianchini, Raymond W. Bickham, Leo E. Bienvenu, Charles. Biggs, Jerry W Sr. Bigler, Delbert. Billington, Richard. Billiot, Alfredia. Billiot, Arthur. Billiot, Aubrey. Billiot, Barell J. Billiot, Betty. Billiot, Bobby J. Billiot, Brian K. Billiot, Cassidy. Billiot, Charles Sr. Billiot, Chris J Sr. Billiot, E J E. Billiot, Earl W Sr. Billiot, Ecton L. Billiot, Emary. Billiot, Forest Jr. Billiot, Gerald. Billiot, Harold J. Billiot, Jacco A. Billiot, Jake A. Billiot, James Jr. Billiot, Joseph S Jr. Billiot, Laurence V. Billiot, Leonard F Jr. Billiot, Lisa. Billiot, Mary L. Billiot, Paul J Sr.

Commerce case No.	Commission case No.	Product/country	Petitioners/supporters
			Billiot, Shirley L. Billiot, Steve M. Billiot, Thomas Adam. Billiot, Thomas Sr. Billiot, Wenceslaus Jr. Billiott, Alexander J. Biron, Yale. Black, William C. Blackston, Larry E. Blackwell, Wade H III. Blackwell, Wade H Jr. Blanchard, Albert. Blanchard, Andrew J. Blanchard, Billy J. Blanchard, Cyrus. Blanchard, Daniel A. Blanchard, Dean. Blanchard, Douglas Jr. Blanchard, Dwayne. Blanchard, Elgin. Blanchard, Gilbert. Blanchard, Jade. Blanchard, James. Blanchard, John F Jr. Blanchard, Katie. Blanchard, Kelly. Blanchard, Matt Joseph. Blanchard, Michael. Blanchard, Quentin Timothy. Blanchard, Roger Sr. Blanchard, Walton H Jr. Bland, Quyen T. Blouin, Roy A. Blume, Jack Jr. Bodden, Arturo. Bodden, Jasper. Bollinger, Donald E. Bolotte, Darren W. Bolton, Larry F. Bondi, Paul J. Bonvillain, Jimmy J. Bonvillian, Donna M. Boone, Clifton Felix. Boone, Donald F II. Boone, Donald F III (Ricky). Boone, Gregory T. Boquet, Noriss P Jr. Boquet, Wilfred Jr. Bordelon, Glenn Sr. Bordelon, James P. Bordelon, Shelby P. Borden, Benny. Borne, Crystal. Borne, Dina L. Borne, Edward Joseph Jr. Borne, Edward Sr. Bosarge, Hubert Lawrence. Bosarge, Robert. Bosarge, Sandra. Bosarge, Steve. Boudlauch, Durel A Jr. Boudoin, Larry Terrell. Boudoin, Nathan. Boudreaux, Brent J. Boudreaux, Elvin J III. Boudreaux, James C Jr. Boudreaux, James N. Boudreaux, Jessie. Boudreaux, Leroy A. Boudreaux, Mark. Boudreaux, Paul Sr. Boudreaux, Richard D. Boudreaux, Ronald Sr. Boudreaux, Sally.

Commerce case No.	Commission case No.	Product/country	Petitioners/supporters
			Boudreaux, Veronica.
			Boudwin, Dwayne.
			Boudwin, Jewel James Sr.
			Boudwin, Wayne.
			Bouise, Norman.
			Boulet, Irwin J Jr.
			Boullion, Debra.
			Bourg, Allen T.
			Bourg, Benny.
			Bourg, Chad J.
			Bourg, Channon.
			Bourg, Chris.
			Bourg, Douglas.
			Bourg, Glenn A.
			Bourg, Jearmie Sr.
			Bourg, Kent A.
			Bourg, Mark.
			Bourg, Nolan P.
			Bourg, Ricky J.
			Bourgeois, Albert P.
			Bourgeois, Brian J Jr.
			Bourgeois, Daniel.
			Bourgeois, Dwayne.
			Bourgeois, Jake.
			Bourgeois, Johnny M.
			Bourgeois, Johnny M Jr.
			Bourgeois, Leon A.
			Bourgeois, Louis A.
			Bourgeois, Merrie E.
			Bourgeois, Randy P.
			Bourgeois, Reed.
			Bourgeois, Webley.
			Bourn, Chris.
			Bourque, Murphy Paul.
			Bourque, Ray.
			Bousegard, Duvic Jr.
			Boutte, Manuel J Jr.
			Bouvier, Colbert A II.
			Bouzigard, Dale J.
			Bouzigard, Edgar J III.
			Bouzigard, Eeris.
			Bowers, Harold.
			Bowers, Tommy.
			Boyd, David E Sr.
			Boyd, Elbert.
			Boykin, Darren L.
			Boykin, Thomas Carol.
			Bradley, James.
			Brady, Brian.
			Brandhurst, Kay.
			Brandhurst, Ray E Sr.
			Brandhurst, Raymond J.
			Braneff, David G.
			Brannan, William P.
			Branom, Donald James Jr.
			Braud, James M.
			Brazan, Frank J.
			Breaud, Irvin F Jr.
			Breaux, Barbara.
			Breaux, Brian J.
			Breaux, Charlie M.
			Breaux, Clifford.
			Breaux, Colin E.
			Breaux, Daniel Jr.
			Breaux, Larry J.
			Breaux, Robert J Jr.
			Breaux, Shelby.
			Briscoe, Robert F Jr.
			Britsch, L D Jr.
			Broussard, Dwayne E.
			Broussard, Eric.
			Broussard, Keith.
			Broussard, Larry.
			Broussard, Mark A.

Commerce case No.	Commission case No.	Product/country	Petitioners/supporters
			Broussard, Roger David.
			Broussard, Roger R.
			Broussard, Steve P.
			Brown, Cindy B.
			Brown, Colleen.
			Brown, Donald G.
			Brown, John W.
			Brown, Paul R.
			Brown, Ricky.
			Brown, Toby H.
			Bruce, Adam J.
			Bruce, Adam J Jr.
			Bruce, Bob R.
			Bruce, Daniel M Sr.
			Bruce, Eli T Sr.
			Bruce, Emelda L.
			Bruce, Gary J Sr.
			Bruce, James P.
			Bruce, Lester J Jr.
			Bruce, Margie L.
			Bruce, Mary P.
			Bruce, Nathan.
			Bruce, Robert.
			Bruce, Russell.
			Brudnock, Peter Sr.
			Brunet, Elton J.
			Brunet, Joseph A.
			Brunet, Joseph A.
			Brunet, Levy J Jr.
			Brunet, Raymond Sr.
			Bryan, David N.
			Bryant, Ina Fay V.
			Bryant, Jack D Sr.
			Bryant, James Larry.
			Buford, Ernest.
			Bui, Ben.
			Bui, Dich.
			Bui, Dung Thi.
			Bui, Huong T.
			Bui, Ngan.
			Bui, Nhuan.
			Bui, Nuoi Van.
			Bui, Tai.
			Bui, Tieu.
			Bui, Tommy.
			Bui, Xuan and De Nguyen.
			Bui, Xuanmai.
			Bull, Delbert E.
			Bundy, Belvina (Kenneth).
			Bundy, Kenneth Sr.
			Bundy, Nicky.
			Bundy, Ronald J.
			Bundy, Ronnie J.
			Buquet, John Jr.
			Buras, Clayton M.
			Buras, Leander.
			Buras, Robert M Jr.
			Buras, Waylon J.
			Burlett, Elliott C.
			Burlett, John C Jr.
			Burnell, Charles B.
			Burnell, Charles R.
			Burnham, Deanna Lea.
			Burns, Stuart E.
			Burroughs, Lindsey Hilton Jr.
			Burton, Ronnie.
			Busby, Hardy E.
			Busby, Tex H.
			Busch, RC.
			Bush, Robert A.
			Bussey, Tyler.
			Butcher, Dorothy.
			Butcher, Rocky J.
			Butler, Albert A.

Commerce case No.	Commission case No.	Product/country	Petitioners/supporters
			Butler, Aline M.
			Bychurch, Johnny.
			Bychurch, Johnny Jr.
			Cabanilla, Alex.
			Caboz, Jose Santos.
			Cacioppo, Anthony Jr.
			Caddell, David.
			Cadiere, Mae Quick.
			Cadiere, Ronald J.
			Cahill, Jack.
			Caillouet, Stanford Jr.
			Caison, Jerry Lane Jr.
			Calcagno, Stephen Paul Sr.
			Calderone, John S.
			Callahan, Gene P Sr.
			Callahan, Michael J.
			Callahan, Russell.
			Callais, Ann.
			Callais, Franklin D.
			Callais, Gary D.
			Callais, Michael.
			Callais, Michael.
			Callais, Sandy.
			Callais, Terrence.
			Camardelle, Anna M.
			Camardelle, Chris J.
			Camardelle, David.
			Camardelle, Edward J III.
			Camardelle, Edward J Jr.
			Camardelle, Harris A.
			Camardelle, Knowles.
			Camardelle, Noel T.
			Camardelle, Tilman J.
			Caminita, John A III.
			Campo, Donald Paul.
			Campo, Kevin.
			Campo, Nicholas J.
			Campo, Roy.
			Campo, Roy Sr.
			Camus, Ernest M Jr.
			Canova, Carl.
			Cantrelle, Alvin.
			Cantrelle, Eugene J.
			Cantrelle, Otis A Sr.
			Cantrelle, Otis Jr (Buddy).
			Cantrelle, Philip A.
			Cantrelle, Tate Joseph.
			Canty, Robert Jamies.
			Cao, Anna.
			Cao, Billy.
			Cao, Billy Viet.
			Cao, Binh Quang.
			Cao, Chau.
			Cao, Dan Dien.
			Cao, Dung Van.
			Cao, Gio Van.
			Cao, Heip A.
			Cao, Linh Huyen.
			Cao, Nghia Thi.
			Cao, Nhieu V.
			Cao, Si-Van.
			Cao, Thanh Kim.
			Cao, Tuong Van.
			Carinhas, Jack G Jr.
			Carl, Joseph Allen.
			Carlos, Gregory.
			Carlos, Irvin.
			Carmadelle, David J.
			Carmadelle, Larry G.
			Carmadelle, Rudy J.
			Carrere, Anthony T Jr.
			Carrier, Larry J.
			Caruso, Michael.
			Casanova, David W Sr.

Commerce case No.	Commission case No.	Product/country	Petitioners/supporters
			Cassagne, Alphonse G III.
			Cassagne, Alphonse G IV.
			Cassidy, Mark.
			Casso, Joseph.
			Castelin, Gilbert.
			Castelin, Sharon.
			Castellanos, Raul L.
			Castelluccio, John A Jr.
			Castille, Joshua.
			Caulfield, Adolph Jr.
			Caulfield, Hope.
			Caulfield, James M Jr.
			Caulfield, Jean.
			Cepriano, Salvador.
			Cerdes, Julius W Jr.
			Cerise, Marla.
			Chabert, John.
			Chaisson, Dean J.
			Chaisson, Henry.
			Chaisson, Vincent A.
			Chaix, Thomas B III.
			Champagne, Brian.
			Champagne, Harold P.
			Champagne, Kenton.
			Champagne, Leon J.
			Champagne, Leroy A.
			Champagne, Lori.
			Champagne, Timmy D.
			Champagne, Willard.
			Champlin, Kim J.
			Chance, Jason R.
			Chancey, Jeff.
			Chapa, Arturo.
			Chaplin Robert G Sr.
			Chaplin, Saxby Stowe.
			Charles, Christopher.
			Charpentier, Allen J.
			Charpentier, Alvin J.
			Charpentier, Daniel J.
			Charpentier, Lawrence.
			Charpentier, Linton.
			Charpentier, Melanie.
			Charpentier, Murphy Jr.
			Charpentier, Robert J.
			Chartier, Michelle.
			Chau, Minh Huu.
			Chauvin, Anthony.
			Chauvin, Anthony P Jr.
			Chauvin, Carey M.
			Chauvin, David James.
			Chauvin, James E.
			Chauvin, Kimberly Kay.
			Cheeks, Alton Bruce.
			Cheers, Elwood.
			Chenier, Ricky.
			Cheramie, Alan.
			Cheramie, Alan J Jr.
			Cheramie, Alton J.
			Cheramie, Berwick Jr.
			Cheramie, Berwick Sr.
			Cheramie, Daniel James Sr.
			Cheramie, Danny.
			Cheramie, David J.
			Cheramie, David P.
			Cheramie, Dickey J.
			Cheramie, Donald.
			Cheramie, Enola.
			Cheramie, Flint.
			Cheramie, Harold L.
			Cheramie, Harry J Sr.
			Cheramie, Harry Jr.
			Cheramie, Harvey Jr.
			Cheramie, Harvey Sr.
			Cheramie, Henry J Sr.

Commerce case No.	Commission case No.	Product/country	Petitioners/supporters
			Cheramie, James A.
			Cheramie, James P.
			Cheramie, Jody P.
			Cheramie, Joey J.
			Cheramie, Johnny.
			Cheramie, Joseph A.
			Cheramie, Lee Allen.
			Cheramie, Linton J.
			Cheramie, Mark A.
			Cheramie, Murphy J.
			Cheramie, Nathan A Sr.
			Cheramie, Neddy P.
			Cheramie, Nicky J.
			Cheramie, Ojess M.
			Cheramie, Paris P.
			Cheramie, Robbie.
			Cheramie, Rodney E Jr.
			Cheramie, Ronald.
			Cheramie, Roy.
			Cheramie, Roy A.
			Cheramie, Sally K.
			Cheramie, Terry J.
			Cheramie, Terry Jr.
			Cheramie, Timmy.
			Cheramie, Tina.
			Cheramie, Todd M.
			Cheramie, Tommy.
			Cheramie, Wayne A.
			Cheramie, Wayne A Jr.
			Cheramie, Wayne F Sr.
			Cheramie, Wayne J.
			Cheramie, Webb Jr.
			Chevalier, Mitch.
			Chew, Thomas J.
			Chhun, Samantha.
			Chiasson, Jody J.
			Chiasson, Manton P Jr.
			Chiasson, Michael P.
			Childress, Gordon.
			Chisholm, Arthur.
			Chisholm, Henry Jr.
			Christen, David Jr.
			Christen, Vernon.
			Christmas, John T Jr.
			Chung, Long V.
			Ciaccio, Vance.
			Cibilic, Bozidar.
			Cieutat, John.
			Cisneros, Albino.
			Ciuffi, Michael L.
			Clark, James M.
			Clark, Jennings.
			Clark, Mark A.
			Clark, Ricky L.
			Cobb, Michael A.
			Cochran, Jimmy.
			Coleman, Ernest.
			Coleman, Freddie Jr.
			Colletti, Rodney A.
			Collier, Ervin J.
			Collier, Wade.
			Collins, Bernard J.
			Collins, Bruce J Jr.
			Collins, Donald.
			Collins, Earline.
			Collins, Eddie F Jr.
			Collins, Jack.
			Collins, Jack.
			Collins, Julius.
			Collins, Lawson Bruce Sr.
			Collins, Lindy S Jr.
			Collins, Logan A Jr.
			Collins, Robert.
			Collins, Timmy P.

Commerce case No.	Commission case No.	Product/country	Petitioners/supporters
			Collins, Vendon Jr.
			Collins, Wilbert Jr.
			Collins, Woodrow.
			Colson, Chris and Michelle.
			Comardelle, Michael J.
			Comeaux, Allen J.
			Compeaux, Curtis J.
			Compeaux, Gary P.
			Compeaux, Harris.
			Cone, Jody.
			Contreras, Mario.
			Cook, Edwin A Jr.
			Cook, Edwin A Sr.
			Cook, Joshua.
			Cook, Larry R Sr.
			Cook, Scott.
			Cook, Theodore D.
			Cooksey, Ernest Neal.
			Cooper, Acy J III.
			Cooper, Acy J Jr.
			Cooper, Acy Sr.
			Cooper, Christopher W.
			Cooper, Jon C.
			Cooper, Marla F.
			Cooper, Vincent J.
			Copeman, John R.
			Corley, Ronald E.
			Cornett, Eddie.
			Cornwall, Roger.
			Cortez, Brenda M.
			Cortez, Cathy.
			Cortez, Curtis.
			Cortez, Daniel P.
			Cortez, Edgar.
			Cortez, Keith J.
			Cortez, Leslie J.
			Cosse, Robert K.
			Coston, Clayton.
			Cotsovolos, John Gordon.
			Coulon, Allen J Jr.
			Coulon, Allen J Sr.
			Coulon, Amy M.
			Coulon, Cleveland F.
			Coulon, Darrin M.
			Coulon, Don.
			Coulon, Earline N.
			Coulon, Ellis Jr.
			Coursey, John W.
			Courville, Ronnie P.
			Cover, Darryl L.
			Cowdrey, Michael Dudley.
			Cowdrey, Michael Nelson.
			Crain, Michael T.
			Crawford, Bryan D.
			Crawford, Steven J.
			Creamer, Quention.
			Credeur, Todd A Sr.
			Credeur, Tony J.
			Creppel, Carlton.
			Creppel, Catherine.
			Creppel, Craig Anthony.
			Creppel, Freddy.
			Creppel, Isadore Jr.
			Creppel, Julinne G III.
			Creppel, Kenneth.
			Creppel, Kenneth.
			Creppel, Nathan J Jr.
			Creppell, Michel P.
			Cristina, Charles J.
			Crochet, Sterling James.
			Crochet, Tony J.
			Crosby, Benjy J.
			Crosby, Darlene.
			Crosby, Leonard W Jr.

Commerce case No.	Commission case No.	Product/country	Petitioners/supporters
			Crosby, Ted J.
			Crosby, Thomas.
			Crum, Lonnie.
			Crum, Tommy Lloyd.
			Cruz, Jesus.
			Cubbage, Melinda T.
			Cuccia, Anthony J.
			Cuccia, Anthony J Jr.
			Cuccia, Kevin.
			Cumbie, Bryan E.
			Cure, Mike.
			Curole, Keith J.
			Curole, Kevin P.
			Curole, Margaret B.
			Curole, Willie P Jr.
			Cutrer, Jason C.
			Cvitanovich, T.
			Daigle, Alfred.
			Daigle, Cleve and Nona.
			Daigle, David John.
			Daigle, EJ.
			Daigle, Glenn.
			Daigle, Jamie J.
			Daigle, Jason.
			Daigle, Kirk.
			Daigle, Leonard P.
			Daigle, Lloyd.
			Daigle, Louis J.
			Daigle, Melanie.
			Daigle, Michael J.
			Daigle, Michael Wayne and JoAnn.
			Daisy, Jeff.
			Dale, Cleveland L.
			Dang, Ba.
			Dang, Dap.
			Dang, David.
			Dang, Duong.
			Dang, Khang.
			Dang, Khang and Tam Phan.
			Dang, Loan Thi.
			Dang, Minh.
			Dang, Minh Van.
			Dang, Son.
			Dang, Tao Kevin.
			Dang, Thang Duc.
			Dang, Thien Van.
			Dang, Thuong.
			Dang, Thuy.
			Dang, Van D.
			Daniels, David.
			Daniels, Henry.
			Daniels, Leslie.
			Danos, Albert Sr.
			Danos, James A.
			Danos, Jared.
			Danos, Oliver J.
			Danos, Ricky P.
			Danos, Rodney.
			Danos, Timothy A.
			d'Antignac, Debi.
			d'Antignac, Jack.
			Dantin, Archie A.
			Dantin, Mark S Sr.
			Dantin, Stephen Jr.
			Dao, Paul.
			Dao, Vang.
			Dao-Nguyen, Chrysti.
			Darda, Albert L Jr.
			Darda, Gertrude.
			Darda, Herbert.
			Darda, J C.
			Darda, Jeremy.
			Darda, Tammy.
			Darda, Trudy.

Commerce case No.	Commission case No.	Product/country	Petitioners/supporters
			Dardar, Alvin.
			Dardar, Basile J.
			Dardar, Basile Sr.
			Dardar, Cindy.
			Dardar, David.
			Dardar, Donald S.
			Dardar, Edison J Sr.
			Dardar, Gayle Picou.
			Dardar, Gilbert B.
			Dardar, Gilbert Sr.
			Dardar, Isadore J Jr.
			Dardar, Jacqueline.
			Dardar, Jonathan M.
			Dardar, Lanny.
			Dardar, Larry J.
			Dardar, Many.
			Dardar, Neal A.
			Dardar, Norbert.
			Dardar, Patti V.
			Dardar, Percy B Sr.
			Dardar, Rose.
			Dardar, Rusty J.
			Dardar, Samuel.
			Dardar, Summersgill.
			Dardar, Terry P.
			Dardar, Toney M Jr.
			Dardar, Toney Sr.
			Dargis, Stephen M.
			Dassau, Louis.
			David, Philip J Jr.
			Davis, Cliff.
			Davis, Daniel A.
			Davis, Danny A.
			Davis, James.
			Davis, John W.
			Davis, Joseph D.
			Davis, Michael Steven.
			Davis, Ronald B.
			Davis, William T Jr.
			Davis, William Theron.
			Dawson, JT.
			de la Cruz, Avery T.
			Dean, Ilene L.
			Dean, John N.
			Dean, Stephen.
			DeBarge, Brian K.
			DeBarge, Sherry.
			DeBarge, Thomas W.
			Decoursey, John.
			Dedon, Walter.
			Deere, Daryl.
			Deere, David E.
			Deere, Dennis H.
			Defelice, Robin.
			Defelice, Tracie L.
			DeHart, Ashton J Sr.
			Dehart, Bernard J.
			Dehart, Blair.
			Dehart, Clevis.
			Dehart, Clevis Jr.
			DeHart, Curtis P Sr.
			Dehart, Eura Sr.
			Dehart, Ferrell John.
			Dehart, Leonard M.
			DeHart, Troy.
			DeJean, Chris N Jr.
			DeJean, Chris N Sr.
			Dekemel, Bonnie D.
			Dekemel, Wm J Jr.
			Delande, Paul.
			Delande, Ten Chie.
			Delatte, Michael J Sr.
			Delaune, Kip M.
			Delaune, Thomas J.

Commerce case No.	Commission case No.	Product/country	Petitioners/supporters
			Delaune, Todd J.
			Delcambre, Carroll A.
			Delgado, Jesse.
			Delino, Carlton.
			Delino, Lorene.
			Deloach, Stephen W Jr.
			DeMoll, Herman J Jr.
			DeMoll, Herman J Sr.
			DeMoll, James C Jr.
			DeMoll, Ralph.
			DeMoll, Robert C.
			DeMoll, Terry R.
			DeMolle, Freddy.
			DeMolle, Otis.
			Dennis, Fred.
			Denty, Steve.
			Deroche, Barbara H.
			Derouen, Caghe.
			Deshotel, Rodney.
			DeSilvey, David.
			Despaux, Byron J.
			Despaux, Byron J Jr.
			Despaux, Glen A.
			Despaux, Ken.
			Despaux, Kerry.
			Despaux, Suzanna.
			Detillier, David E.
			DeVaney, Bobby C Jr.
			Dickey, Wesley Frank.
			Diep, Vu.
			Dinger, Anita.
			Dinger, Corbert Sr.
			Dinger, Eric.
			Dingler, Mark H.
			Dinh, Chau Thanh.
			Dinh, Khai Duc.
			Dinh, Lien.
			Dinh, Toan.
			Dinh, Vincent.
			Dion, Ernest.
			Dion, Paul A.
			Dion, Thomas Autry.
			Disalvo, Paul A.
			Dismuke, Robert E Sr.
			Ditcharo, Dominick III.
			Dixon, David.
			Do, Cuong V.
			Do, Dan C.
			Do, Dung V.
			Do, Hai Van.
			Do, Hieu.
			Do, Hung V.
			Do, Hung V.
			Do, Johnny.
			Do, Kiet Van.
			Do, Ky Hong.
			Do, Ky Quoc.
			Do, Lam.
			Do, Liet Van.
			Do, Luong Van.
			Do, Minh Van.
			Do, Nghiep Van.
			Do, Ta.
			Do, Ta Phon.
			Do, Than Viet.
			Do, Thanh V.
			Do, Theo Van.
			Do, Thien Van.
			Do, Tinh A.
			Do, Tri.
			Do, Vi V.
			Doan, Anh Thi.
			Doan, Joseph.
			Doan, Mai.

Commerce case No.	Commission case No.	Product/country	Petitioners/supporters
			Doan, Minh.
			Doan, Ngoc.
			Doan, Tran Van.
			Domangue, Darryl.
			Domangue, Emile.
			Domangue, Mary.
			Domangue, Michael.
			Domangue, Paul.
			Domangue, Ranzell Sr.
			Domangue, Stephen.
			Domangue, Westley.
			Domingo, Carolyn.
			Dominique, Amy R.
			Dominque, Gerald R.
			Donini, Ernest N.
			Donnelly, David C.
			Donohue, Holly M.
			Dooley, Denise F.
			Dopson, Craig B.
			Dore, Presley J.
			Dore, Preston J Jr.
			Dorr, Janthan C Jr.
			Doucet, Paul J Sr.
			Downey, Colleen.
			Doxey, Robert Lee Sr.
			Doxey, Ruben A.
			Doxey, William L.
			Doyle, John T.
			Drawdy, John Joseph.
			Drury, Bruce W Jr.
			Drury, Bruce W Sr.
			Drury, Bryant J.
			Drury, Eric S.
			Drury, Helen M.
			Drury, Jeff III.
			Drury, Kevin.
			Drury, Kevin S Sr.
			Drury, Steve R.
			Drury, Steven J.
			Dubberly, James F.
			Dubberly, James Michael.
			Dubberly, James Michael Jr.
			Dubberly, John J.
			Dubois, Euris A.
			Dubois, John D Jr.
			Dubois, Lonnie J.
			Duck, Kermit Paul.
			Dudenhefer, Anthony.
			Dudenhefer, Connie S.
			Dudenhefer, Eugene A.
			Dudenhefer, Milton J Jr.
			Duet, Brad J.
			Duet, Darrel A.
			Duet, Guy J.
			Duet, Jace J.
			Duet, Jay.
			Duet, John P.
			Duet, Larson.
			Duet, Ramie.
			Duet, Raymond J.
			Duet, Tammy B.
			Duet, Tyrone.
			Dufrene, Archie.
			Dufrene, Charles.
			Dufrene, Curt F.
			Dufrene, Elson A.
			Dufrene, Eric F.
			Dufrene, Eric F Jr.
			Dufrene, Eric John.
			Dufrene, Golden J.
			Dufrene, Jeremy M.
			Dufrene, Juliette B.
			Dufrene, Leroy J.
			Dufrene, Milton J.

Commerce case No.	Commission case No.	Product/country	Petitioners/supporters
			Dufrene, Ronald A Jr.
			Dufrene, Ronald A Sr.
			Dufrene, Scottie M.
			Dufrene, Toby.
			Dugar, Edward A II.
			Dugas, Donald John.
			Dugas, Henri J IV.
			Duhe, Greta.
			Duhe, Robert.
			Duhon, Charles.
			Duhon, Douglas P.
			Duncan, Faye E.
			Duncan, Gary.
			Duncan, Loyde C.
			Dunn, Bob.
			Duong, Billy.
			Duong, Chamroeun.
			Duong, EM.
			Duong, Ho Tan Phi.
			Duong, Kong.
			Duong, Mau.
			Duplantis, Blair P.
			Duplantis, David.
			Duplantis, Frankie J.
			Duplantis, Maria.
			Duplantis, Teddy W.
			Duplantis, Wedgir J Jr.
			Duplessis, Anthony James Sr.
			Duplessis, Bonnie S.
			Duplessis, Clarence R.
			Dupre, Brandon P.
			Dupre, Cecile.
			Dupre, David A.
			Dupre, Davis J Jr.
			Dupre, Easton J.
			Dupre, Jimmie Sr.
			Dupre, Linward P.
			Dupre, Mary L.
			Dupre, Michael J.
			Dupre, Michael J Jr.
			Dupre, Randall P.
			Dupre, Richard A.
			Dupre, Rudy P.
			Dupre, Ryan A.
			Dupre, Tony J.
			Dupre, Troy A.
			Dupree, Bryan.
			Dupree, Derrick.
			Dupree, Malcolm J Sr.
			Dupuis, Clayton J.
			Durand, Walter Y.
			Dusang, Melvin A.
			Duval, Denval H Sr.
			Duval, Wayne.
			Dyer, Nadine D.
			Dyer, Tony.
			Dykes, Bert L.
			Dyson, Adley L Jr.
			Dyson, Adley L Sr.
			Dyson, Amy.
			Dyson, Casandra.
			Dyson, Clarence III.
			Dyson, Jimmy Jr.
			Dyson, Jimmy L Sr.
			Dyson, Kathleen.
			Dyson, Maricela.
			Dyson, Phillip II.
			Dyson, Phillip Sr.
			Dyson, William.
			Eckerd, Bill.
			Edens, Angela Blake.
			Edens, Donnie.
			Edens, Jeremy Donald.
			Edens, Nancy M.

Commerce case No.	Commission case No.	Product/country	Petitioners/supporters
			Edens, Steven L.
			Edens, Timothy Dale.
			Edgar, Daniel.
			Edgar, Joey.
			Edgerson, Roosevelt.
			Edwards,Tommy W III.
			Ellerbee, Jody Duane.
			Ellison, David Jr.
			Encalade, Alfred Jr.
			Encalade, Anthony T.
			Encalade, Cary.
			Encalade, Joshua C.
			Encalade, Stanley A.
			Enclade, Joseph L.
			Enclade, Michael Sr and Jeannie Pitre.
			Enclade, Rodney J.
			Englade, Alfred.
			Ennis, A L Jr.
			Erickson, Grant G.
			Erlinger, Carroll.
			Erlinger, Gary R.
			Eschete, Keith A.
			Esfeller, Benny A.
			Eskine, Kenneth.
			Esponge, Ernest J.
			Estaves, David Sr.
			Estaves, Ricky Joseph.
			Estay, Allen J.
			Estay, Wayne.
			Esteves, Anthony E Jr.
			Estrada, Orestes.
			Evans, Emile J Jr.
			Evans, Kevin J.
			Evans, Lester.
			Evans, Lester J Jr.
			Evans, Tracey J Sr.
			Everson, George C.
			Eymard, Brian P Sr.
			Eymard, Jervis J and Carolyn B.
			Fabiano, Morris C.
			Fabra, Mark.
			Fabre, Alton Jr.
			Fabre, Ernest J.
			Fabre, Kelly V.
			Fabre, Peggy B.
			Fabre, Sheron.
			Fabre, Terry A.
			Fabre, Wayne M.
			Falcon, Mitchell J.
			Falgout, Barney.
			Falgout, Jerry P.
			Falgout, Leroy J.
			Falgout, Timothy J.
			Fanguy, Barry G.
			Fanning, Paul Jr.
			Farris, Thomas J.
			Fasone, Christopher J.
			Fasone, William J.
			Faulk, Lester J.
			Favaloro, Thomas J.
			Favre, Michael Jr.
			Fazende, Jeffery.
			Fazende, Thomas.
			Fazende, Thomas G.
			Fazzio, Anthony.
			Fazzio, Douglas P.
			Fazzio, Maxine J.
			Fazzio, Steve.
			Felarise, EJ.
			Felarise, Wayne A Sr.
			Fernandez, John.
			Fernandez, Laudelino.
			Ferrara, Audrey B.
			Ficarino, Dominick Jr.

Commerce case No.	Commission case No.	Product/country	Petitioners/supporters
			Fields, Bryan. Fillinich, Anthony. Fillinich, Anthony Sr. Fillinich, Jack. Fincher, Penny. Fincher, William. Fisch, Burton E. Fisher, Kelly. Fisher, Kirk. Fisher, Kirk A. Fitch, Adam. Fitch, Clarence J Jr. Fitch, Hanson. Fitzgerald, Burnell. Fitzgerald, Kirk. Fitzgerald, Kirk D. Fitzgerald, Ricky J Jr. Fleming, John M. Fleming, Meigs F. Fleming, Mike. Flick, Dana. Flores, Helena D. Flores, Thomas. Flowers, Steve W. Flowers, Vincent F. Folse, David M. Folse, Heath. Folse, Mary L. Folse, Ronald B. Fonseca, Francis Sr. Fontaine, William S. Fontenot, Peggy D. Ford, Judy. Ford, Warren Wayne. Foreman, Ralph Jr. Foret, Alva J. Foret, Billy J. Foret, Brent J. Foret, Glenn. Foret, Houston. Foret, Jackie P. Foret, Kurt J Sr. Foret, Lovelace A Sr. Foret, Loveless A Jr. Foret, Mark M. Foret, Patricia C. Forrest, David P. Forsyth, Hunter. Forsythe, John. Fortune, Michael A. France, George J. Francis, Albert. Franklin, James K. Frankovich, Anthony. Franks, Michael. Frauenberger, Richard Wayne. Frazier, David J. Frazier, David M. Frazier, James. Frazier, Michael. Frederick, Davis. Frederick, Johnnie and Jeannie. Fredrick, Michael. Freeman, Arthur D. Freeman, Darrel P Sr. Freeman, Kenneth F. Freeman, Larry Scott. Frelich, Charles P. Frelich, Floyd J. Frelich, Kent. Frerics, Doug. Frerks, Albert R Jr. Frickey, Darell. Frickey, Darren.

Commerce case No.	Commission case No.	Product/country	Petitioners/supporters
			Frickey, Dirk I.
			Frickey, Eric J.
			Frickey, Harry J Jr.
			Frickey, Jimmy.
			Frickey, Rickey J.
			Frickey, Westley J.
			Friloux, Brad.
			Frisella, Jeanette M.
			Frisella, Jerome A Jr.
			Frost, Michael R.
			Fruge, Wade P.
			Gadson, James.
			Gaines, Dwayne.
			Gala, Christine.
			Galjour, Jess J.
			Galjour, Reed.
			Gallardo, John W.
			Gallardo, Johnny M.
			Galliano, Anthony.
			Galliano, Horace J.
			Galliano, Joseph Sr.
			Galliano, Logan J.
			Galliano, Lynne L.
			Galliano, Moise Jr.
			Galloway, AT Jr.
			Galloway, Jimmy D.
			Galloway, Judy L.
			Galloway, Mark D.
			Galt, Giles F.
			Gambarella, Luvencie J.
			Ganoi, Kristine.
			Garcia, Ana Maria.
			Garcia, Anthony.
			Garcia, Edward.
			Garcia, Kenneth.
			Garner, Larry S.
			Gary, Dalton J.
			Gary, Ernest J.
			Gary, Leonce Jr.
			Garza, Andrew.
			Garza, Jose H.
			Gaskill, Elbert Clinton and Sandra.
			Gaspar, Timothy.
			Gaspard, Aaron and Hazel C.
			Gaspard, Dudley A Jr.
			Gaspard, Leonard J.
			Gaspard, Michael A.
			Gaspard, Michael Sr.
			Gaspard, Murry.
			Gaspard, Murry A Jr.
			Gaspard, Murry Sr.
			Gaspard, Murvin.
			Gaspard, Ronald Sr.
			Gaspard, Ronald Wayne Jr.
			Gaubert, Elizabeth.
			Gaubert, Gregory M.
			Gaubert, Melvin.
			Gaudet, Allen J IV.
			Gaudet, Ricky Jr.
			Gauthier, Hewitt J Sr.
			Gautreaux, William A.
			Gay, Norman F.
			Gay, Robert G.
			Gazzier, Daryl G.
			Gazzier, Emanuel A.
			Gazzier, Wilfred E.
			Gegenheimer, William F.
			Geiling, James.
			Geisman, Tony.
			Gentry, Robert.
			Gentry, Samuel W Jr.
			George, James J Jr.
			Gerica, Clara.
			Gerica, Peter.

Commerce case No.	Commission case No.	Product/country	Petitioners/supporters
			Giambrone, Corey P.
			Gibson, Eddie E.
			Gibson, Joseph.
			Gibson, Ronald F.
			Gilden, Eddie Jr.
			Gilden, Eddie Sr.
			Gilden, Inez W.
			Gilden, Wayne.
			Gillikin, James D.
			Girard, Chad Paul.
			Giroir, Mark S.
			Gisclair, Anthony J.
			Gisclair, Anthony Joseph Sr.
			Gisclair, August.
			Gisclair, Dallas J Sr.
			Gisclair, Doyle A.
			Gisclair, Kip J.
			Gisclair, Ramona D.
			Gisclair, Wade.
			Gisclair, Walter.
			Glover, Charles D.
			Glynn, Larry.
			Goetz, George.
			Goings, Robert Eugene.
			Golden, George T.
			Golden, William L.
			Gollot, Brian.
			Gollot, Edgar R.
			Gonzales, Arnold Jr.
			Gonzales, Mrs Cyril E Jr.
			Gonzales, Rene R.
			Gonzales, Rudolph S Jr.
			Gonzales, Rudolph S Sr.
			Gonzales, Sylvia A.
			Gonzales, Tim J.
			Gonzalez, Jorge Jr.
			Gonzalez, Julio.
			Gordon, Donald E.
			Gordon, Patrick Alvin.
			Gore, Henry H.
			Gore, Isabel.
			Gore, Pam.
			Gore, Thomas L.
			Gore, Timothy Ansel.
			Gottschalk, Gregory.
			Gourgues, Harold C Jr.
			Goutierrez, Tony C.
			Govea, Joaquin.
			Graham, Darrell.
			Graham, Steven H.
			Granger, Albert J Sr.
			Granich, James.
			Granier, Stephen J.
			Grass, Michael.
			Graves, Robert N Sr.
			Gray, Jeannette.
			Gray, Monroe.
			Gray, Shirley E.
			Gray, Wayne A Sr.
			Graybill, Ruston.
			Green, Craig X.
			Green, James W.
			Green, James W Jr.
			Green, Shaun.
			Greenlaw, W C Jr.
			Gregoire, Ernest L.
			Gregoire, Rita M.
			Gregory, Curtis B.
			Gregory, Mercedes E.
			Grice, Raymond L Jr.
			Griffin, Alden J Sr.
			Griffin, Craig.
			Griffin, David D.
			Griffin, Elvis Joseph Jr.

Commerce case No.	Commission case No.	Product/country	Petitioners/supporters
			Griffin, Faye.
			Griffin, Faye Ann.
			Griffin, Jimmie J.
			Griffin, Nolty J.
			Griffin, Rickey.
			Griffin, Sharon.
			Griffin, Timothy.
			Griffin, Troy D.
			Groff, Alfred A.
			Groff, John A.
			Groover, Hank.
			Gros, Brent J Sr.
			Gros, Craig J.
			Gros, Danny A.
			Gros, Gary Sr.
			Gros, Junius A Jr.
			Gros, Keven.
			Gros, Michael A.
			Gross, Homer.
			Grossie, Janet M.
			Grossie, Shane A.
			Grossie, Tate.
			Grow, Jimmie C.
			Guenther, John J.
			Guenther, Raphael.
			Guerra, Bruce.
			Guerra, Chad L.
			Guerra, Fabian C.
			Guerra, Guy A.
			Guerra, Jerry V Sr.
			Guerra, Kurt P Sr.
			Guerra, Ricky J Sr.
			Guerra, Robert.
			Guerra, Ryan.
			Guerra, Troy A.
			Guerra, William Jr.
			Guidroz, Warren J.
			Guidry, Alvin A.
			Guidry, Andy J.
			Guidry, Arthur.
			Guidry, Bud.
			Guidry, Calvin P.
			Guidry, Carl J.
			Guidry, Charles J.
			Guidry, Chris J.
			Guidry, Clarence P.
			Guidry, Clark.
			Guidry, Clint.
			Guidry, Clinton P Jr.
			Guidry, Clyde A.
			Guidry, David.
			Guidry, Dobie.
			Guidry, Douglas J Sr.
			Guidry, Elgy III.
			Guidry, Elgy Jr.
			Guidry, Elwin A Jr.
			Guidry, Gerald A.
			Guidry, Gordon Jr.
			Guidry, Guillaume A.
			Guidry, Harold.
			Guidry, Jason.
			Guidry, Jessie J.
			Guidry, Jessie Joseph.
			Guidry, Jonathan B.
			Guidry, Joseph T Jr.
			Guidry, Keith M.
			Guidry, Kenneth J.
			Guidry, Kerry A.
			Guidry, Marco.
			Guidry, Maurin T and Tamika.
			Guidry, Michael J.
			Guidry, Nolan J Sr.
			Guidry, Randy Peter Sr.
			Guidry, Rhonda S.

Commerce case No.	Commission case No.	Product/country	Petitioners/supporters
			Guidry, Robert C. Guidry, Robert Joseph. Guidry, Robert Wayne. Guidry, Roger. Guidry, Ronald. Guidry, Roy Anthony. Guidry, Roy J. Guidry, Tammy. Guidry, Ted. Guidry, Thomas P. Guidry, Timothy. Guidry, Troy. Guidry, Troy. Guidry, Ulysses. Guidry, Vicki. Guidry, Wayne J. Guidry, Wyatt. Guidry, Yvonne. Guidry-Calva, Holly A. Guilbeaux, Donald J. Guilbeaux, Lou. Guillie, Shirley. Guillory, Horace H. Guillot, Benjamin J Jr. Guillot, Rickey A. Gulledge, Lee. Gutierrez, Anita. Guy, Jody. Guy, Kimothy Paul. Guy, Wilson. Ha, Cherie Lan. Ha, Co Dong. Ha, Lai Thuy Thi. Ha, Lyanna. Hadwall, John R. Hafford, Johnny. Hagan, Jules. Hagan, Marianna. Haiglea, Robbin Richard. Hales, William E. Halili, Rhonda L. Hall, Byron S. Hall, Darrel T Sr. Hall, Lorrie A. Hammer, Michael P. Hammock, Julius Michael. Hancock, Jimmy L. Handlin, William Sr. Hang, Cam T. Hansen, Chris. Hansen, Eric P. Hanson, Edmond A. Harbison, Louis. Hardee, William P. Hardison, Louis. Hardy John C. Hardy, Sharon. Harmon, Michelle. Harrington, George J. Harrington, Jay. Harris, Bobby D. Harris, Buster. Harris, Jimmy Wayne Sr. Harris, Johnny Ray. Harris, Kenneth A. Harris, Ronnie. Harris, Susan D. Harris, William. Harrison, Daniel L. Hartmann, Leon M Jr. Hartmann, Walter Jr. Hattaway, Errol Henry. Haycock, Kenneth. Haydel, Gregory.

Commerce case No.	Commission case No.	Product/country	Petitioners/supporters
			Hayes, Clinton.
			Hayes, Katherine F.
			Hayes, Lod Jr.
			Hean, Hong.
			Heathcock, Walter Jr.
			Hebert, Albert Joseph.
			Hebert, Bernie.
			Hebert, Betty Jo.
			Hebert, Chris.
			Hebert, Craig J.
			Hebert, David.
			Hebert, David Jr.
			Hebert, Earl J.
			Hebert, Eric J.
			Hebert, Jack M.
			Hebert, Johnny Paul.
			Hebert, Jonathan.
			Hebert, Jules J.
			Hebert, Kim M.
			Hebert, Lloyd S III.
			Hebert, Michael J.
			Hebert, Myron A.
			Hebert, Norman.
			Hebert, Patrick.
			Hebert, Patrick A.
			Hebert, Pennington Jr.
			Hebert, Philip.
			Hebert, Robert A.
			Hebert, Terry W.
			Hedrick, Gerald J Jr.
			Helmer, Claudia A.
			Helmer, Gerry J.
			Helmer, Herman C Jr.
			Helmer, Kenneth.
			Helmer, Larry J Sr.
			Helmer, Michael A Sr.
			Helmer, Rusty L.
			Helmer, Windy.
			Hemmenway, Jack.
			Henderson, Brad.
			Henderson, Curtis.
			Henderson, David A Jr.
			Henderson, David A Sr.
			Henderson, Johnny.
			Henderson, Olen.
			Henderson, P Loam.
			Henry, Joanne.
			Henry, Rodney.
			Herbert, Patrick and Terry.
			Hereford, Rodney O Jr.
			Hereford, Rodney O Sr.
			Hernandez, Corey.
			Herndon, Mark.
			Hertel, Charles W.
			Hertz, Edward C Sr.
			Hess, Allen L Sr.
			Hess, Henry D Jr.
			Hess, Jessica R.
			Hess, Wayne B.
			Hewett, Emma.
			Hewett, James.
			Hickman, John.
			Hickman, Marvin.
			Hicks, Billy M.
			Hicks, James W.
			Hicks, Larry W.
			Hicks, Walter R.
			Hien, Nguyen.
			Higgins, Joseph J III.
			Hill, Darren S.
			Hill, Joseph R.
			Hill, Sharon.
			Hill, Willie E Jr.
			Hills, Herman W.

Commerce case No.	Commission case No.	Product/country	Petitioners/supporters
			Hingle, Barbara E.
			Hingle, Rick A.
			Hingle, Roland T Jr.
			Hingle, Roland T Sr.
			Hingle, Ronald J.
			Hinojosa, R.
			Hinojosa, Randy.
			Hinojosa, Ricky A.
			Hipps, Nicole Marie.
			Ho, Dung Tan.
			Ho, Hung.
			Ho, Jennifer.
			Ho, Jimmy.
			Ho, Lam.
			Ho, Nam.
			Ho, Nga T.
			Ho, O.
			Ho, Sang N.
			Ho, Thanh Quoc.
			Ho, Thien Dang.
			Ho, Tien Van.
			Ho, Tri Tran.
			Hoang, Dung T.
			Hoang, Hoa T and Tam Hoang.
			Hoang, Huy Van.
			Hoang, Jennifer Vu.
			Hoang, John.
			Hoang, Julie.
			Hoang, Kimberly.
			Hoang, Linda.
			Hoang, Loan.
			Hoang, San Ngoc.
			Hoang, Tro Van.
			Hoang, Trung Kim.
			Hoang, Trung Tuan.
			Hoang, Vincent Huynh.
			Hodges, Ralph W.
			Hoffpaviiz, Harry K.
			Holland, Vidal.
			Holler, Boyce Dwight Jr.
			Hollier, Dennis J.
			Holloway, Carl D.
			Hong, Tai Van.
			Hood, Malcolm.
			Hopton, Douglas.
			Horaist, Shawn P.
			Hostetler, Warren L II.
			Hotard, Claude.
			Hotard, Emile J Jr.
			Howard, Jeff.
			Howerin, Billy Sr.
			Howerin, Wendell Sr.
			Hubbard, Keith.
			Hubbard, Perry III.
			Huber, Berry T.
			Huber, Charles A.
			Huck, Irma Elaine.
			Huck, Steven R.
			Huckabee, Harold.
			Hue, Patrick A.
			Hughes, Brad J.
			Hults, Thomas.
			Hutcherson, Daniel J.
			Hutchinson, Douglas.
			Hutchinson, George D.
			Hutchinson, William H.
			Hutto, Cynthia E.
			Hutto, Henry G Jr.
			Huynh, Chien Thi.
			Huynh, Dong Xuan.
			Huynh, Dung.
			Huynh, Dung V.
			Huynh, Hai.
			Huynh, Hai.

Commerce case No.	Commission case No.	Product/country	Petitioners/supporters
			Huynh, Hai Van.
			Huynh, Hoang D.
			Huynh, Hoang Van.
			Huynh, Hung.
			Huynh, James N.
			Huynh, Johhny Hiep.
			Huynh, Johnnie.
			Huynh, Kim.
			Huynh, Lay.
			Huynh, Long.
			Huynh, Mack Van.
			Huynh, Mau Van.
			Huynh, Minh.
			Huynh, Minh Van.
			Huynh, Nam Van.
			Huynh, Thai.
			Huynh, Tham Thi.
			Huynh, Thanh.
			Huynh, The V.
			Huynh, Tri.
			Huynh, Truc.
			Huynh, Tu.
			Huynh, Tu.
			Huynh, Tung Van.
			Huynh, Van X.
			Huynh, Viet Van.
			Huynh, Vuong Van.
			Hymel, Joseph Jr.
			Hymel, Michael D.
			Hymel, Nolan J Sr.
			Ingham, Herbert W.
			Inglis, Richard M.
			Ingraham, Joseph S.
			Ingraham, Joyce.
			Ipock, Billy.
			Ipock, William B.
			Ireland, Arthur Allen.
			Iver, George Jr.
			Jackson, Alfred M.
			Jackson, Carl John.
			Jackson, David.
			Jackson, Eugene O.
			Jackson, Glenn C Jr.
			Jackson, Glenn C Sr.
			Jackson, James Jerome.
			Jackson, John D.
			Jackson, John Elton Sr.
			Jackson, Levi.
			Jackson, Nancy L.
			Jackson, Robert W.
			Jackson, Shannon.
			Jackson, Shaun C.
			Jackson, Steven A.
			Jacob, Ronald R.
			Jacob, Warren J Jr.
			Jacobs, L Anthony.
			Jacobs, Lawrence F.
			Jarreau, Billy and Marilyn.
			Jarvis, James D.
			Jaye, Emma.
			Jeanfreau, Vincent R.
			Jefferies, William.
			Jemison, Timothy Michael Sr.
			Jennings, Jacob.
			Joffrion, Harold J Jr.
			Johnson, Albert F.
			Johnson, Ashley Lamar.
			Johnson, Bernard Jr.
			Johnson, Brent W.
			Johnson, Bruce Warem.
			Johnson, Carl S.
			Johnson, Carolyn.
			Johnson, Clyde Sr.
			Johnson, David G.

Commerce case No.	Commission case No.	Product/country	Petitioners/supporters
			Johnson, David Paul.
			Johnson, Gary Allen Sr.
			Johnson, George D.
			Johnson, Michael A.
			Johnson, Randy J.
			Johnson, Regenia.
			Johnson, Robert.
			Johnson, Ronald Ray Sr.
			Johnson, Steve.
			Johnson, Thomas Allen Jr.
			Johnston, Ronald.
			Joly, Nicholas J Jr.
			Jones, Charles.
			Jones, Clinton.
			Jones, Daisy Mae.
			Jones, Jeffery E.
			Jones, Jerome N Sr.
			Jones, John W.
			Jones, Larry.
			Jones, Len.
			Jones, Michael G Sr.
			Jones, Paul E.
			Jones, Perry T Sr.
			Jones, Ralph William.
			Jones, Richard G Sr.
			Jones, Stephen K.
			Jones, Wayne.
			Joost, Donald F.
			Jordan, Dean.
			Jordan, Hubert William III (Bert).
			Jordan, Hurbert W Jr.
			Judalet, Ramon G.
			Judy, William Roger.
			Julian, Ida.
			Julian, John I Sr.
			Juneau, Anthony Sr.
			Juneau, Bruce.
			Juneau, Robert A Jr and Laura K.
			Jurjevich, Leander J.
			Kain, Jules B Sr.
			Kain, Martin A.
			Kalliainen, Dale.
			Kalliainen, Richard.
			Kang, Chamroeun.
			Kang, Sambo.
			Kap, Brenda.
			Keen, Robert Steven.
			Keenan, Robert M.
			Kellum, Kenneth Sr.
			Kellum, Larry Gray Sr.
			Kellum, Roxanne.
			Kelly, Roger B.
			Kelly, Thomas E.
			Kendrick, Chuck J.
			Kennair, Michael S.
			Kennedy, Dothan.
			Kenney, David Jr.
			Kenney, Robert W.
			Kent, Michael A.
			Keo, Bunly.
			Kerchner, Steve.
			Kern, Thurmond.
			Khin, Sochenda.
			Khui, Lep and Nga Ho.
			Kidd, Frank.
			Kiesel, Edward C and Lorraine T.
			Kiff, Hank J.
			Kiff, Melvin.
			Kiffe, Horace.
			Kim, Puch.
			Kimbrough, Carson.
			Kim-Tun, Soeun.
			King, Andy A.
			King, Donald Jr.

Commerce case No.	Commission case No.	Product/country	Petitioners/supporters
			King, James B.
			King, Thornell.
			King, Wesley.
			Kit, An.
			Kizer, Anthony J.
			Kleimann, Robert.
			Knapp, Alton P Jr.
			Knapp, Alton P Sr.
			Knapp, Ellis L Jr.
			Knapp, Melvin L.
			Knapp, Theresa.
			Knecht, Frederick Jr.
			Knezek, Lee.
			Knight, George.
			Knight, Keith B.
			Knight, Robert E.
			Koch, Howard J.
			Kong, Seng.
			Konitz, Bobby.
			Koo, Herman.
			Koonce, Curtis S.
			Koonce, Howard N.
			Kopszywa, Mark L.
			Kopszywa, Stanley J.
			Kotulja, Stejepan.
			Kraemer, Bridget.
			Kraemer, Wilbert J.
			Kraemer, Wilbert Jr.
			Kramer, David.
			Krantz, Arthur Jr.
			Krantz, Lori.
			Kraver, C W.
			Kreger, Ronald A Sr.
			Kreger, Roy J Sr.
			Kreger, Ryan A.
			Krennerich, Raymond A.
			Kroke, Stephen E.
			Kruth, Frank D.
			Kuchler, Alphonse L III.
			Kuhn, Bruce A Sr.
			Kuhn, Gerard R Jr.
			Kuhn, Gerard R Sr.
			Kuhns, Deborah.
			LaBauve, Kerry.
			LaBauve, Sabrina.
			LaBauve, Terry.
			LaBiche, Todd A.
			LaBove, Carroll.
			LaBove, Frederick P.
			Lachica, Jacqueline.
			Lachico, Douglas.
			Lacobon, Tommy W Jr.
			Lacobon, Tony C.
			LaCoste, Broddie.
			LaCoste, Carl.
			LaCoste, Dennis E.
			LaCoste, Grayland J.
			LaCoste, Malcolm Jr.
			LaCoste, Melvin.
			LaCoste, Melvin W Jr.
			LaCoste, Ravin J Jr.
			LaCoste, Ravin Sr.
			Ladner, Clarence J III.
			Ladson, Earlene G.
			LaFont, Douglas A Sr.
			LaFont, Edna S.
			LaFont, Jackin.
			LaFont, Noces J Jr.
			LaFont, Weyland J Sr.
			LaFrance, Joseph T.
			Lagarde, Frank N.
			Lagarde, Gary Paul.
			Lagasse, Michael F.
			Lai, Hen K.

Commerce case No.	Commission case No.	Product/country	Petitioners/supporters
			Lai, Then.
			Lam, Cang Van.
			Lam, Cui.
			Lam, Dong Van.
			Lam, Hiep Tan.
			Lam, Lan Van.
			Lam, Lee Phenh.
			Lam, Phan.
			Lam, Qui.
			Lam, Sochen.
			Lam, Tai.
			Lam, Tinh Huu.
			Lambas, Jessie J Sr.
			Lanclos, Paul.
			Landry, David A.
			Landry, Dennis J.
			Landry, Edward N Jr.
			Landry, George.
			Landry, George M.
			Landry, James F.
			Landry, Jude C.
			Landry, Robert E.
			Landry, Ronald J.
			Landry, Samuel J Jr.
			Landry, Tracy.
			Lane, Daniel E.
			Lapeyrouse, Lance M.
			Lapeyrouse, Rosalie.
			Lapeyrouse, Tillman Joseph.
			LaRive, James L Jr.
			LaRoche, Daniel S.
			Lasseigne, Betty.
			Lasseigne, Blake.
			Lasseigne, Floyd.
			Lasseigne, Frank.
			Lasseigne, Harris Jr.
			Lasseigne, Ivy Jr.
			Lasseigne, Jefferson.
			Lasseigne, Jefferson P Jr.
			Lasseigne, Johnny J.
			Lasseigne, Marlene.
			Lasseigne, Nolan J.
			Lasseigne, Trent.
			Lat, Chhiet.
			Latapie, Charlotte A.
			Latapie, Crystal.
			Latapie, Jerry.
			Latapie, Joey G.
			Latapie, Joseph.
			Latapie, Joseph F Sr.
			Latapie, Travis.
			Latiolais, Craig J.
			Latiolais, Joel.
			Lau, Ho Thanh.
			Laughlin, James G.
			Laughlin, James Mitchell.
			Laurent, Yvonne M.
			Lavergne, Roger.
			Lawdros, Terrance Jr.
			Layrisson, Michael A III.
			Le, Amanda.
			Le, An Van.
			Le, Ben.
			Le, Binh T.
			Le, Cheo Van.
			Le, Chinh Thanh.
			Le, Chinh Thanh and Yen Vo.
			Le, Cu Thi.
			Le, Dai M.
			Le, Dale.
			Le, David Rung.
			Le, Du M.
			Le, Duc V.
			Le, Duoc M.

Commerce case No.	Commission case No.	Product/country	Petitioners/supporters
			Le, Hien V. Le, Houston T. Le, Hung. Le, Jimmy. Le, Jimmy and Hoang. Le, Khoa. Le, Kim. Le, Ky Van. Le, Lang Van. Le, Lily. Le, Lisa Tuyet Thi. Le, Loi. Le, Minh Van. Le, Muoi Van. Le, My. Le, My V. Le, Nam and Xhan-Minh Le. Le, Nam Van. Le, Nhieu T. Le, Nhut Hoang. Le, Nu Thi. Le, Phuc Van. Le, Que V. Le, Quy. Le, Robert. Le, Sam Van. Le, Sau V. Le, Son. Le, Son. Le, Son H. Le, Son Quoc. Le, Son Van. Le, Su. Le, Tam V. Le, Thanh Huong. Le, Tong Minh. Le, Tony. Le, Tracy Lan Chi. Le, Tuan Nhu. Le, Viet Hoang. Le, Vui. Leaf, Andrew Scott. Leary, Roland. LeBeauf, Thomas. LeBlanc, Donnie. LeBlanc, Edwin J. LeBlanc, Enoch P. LeBlanc, Gareth R III. LeBlanc, Gareth R Jr. LeBlanc, Gerald E. LeBlanc, Hubert C. LeBlanc, Jerald. LeBlanc, Jesse Jr. LeBlanc, Keenon Anthony. LeBlanc, Lanvin J. LeBlanc, Luke A. LeBlanc, Marty J. LeBlanc, Marty J Jr. LeBlanc, Mickel J. LeBlanc, Robert Patrick. LeBlanc, Scotty M. LeBlanc, Shelton. LeBlanc, Terry J. LeBoeuf, Brent J. LeBoeuf, Emery J. LeBoeuf, Joseph R. LeBoeuf, Tammy Y. LeBouef, Dale. LeBouef, Edward J. LeBouef, Ellis J Jr. LeBouef, Gillis. LeBouef, Jimmie. LeBouef, Leslie. LeBouef, Lindy J.

Commerce case No.	Commission case No.	Product/country	Petitioners/supporters
			LeBouef, Micheal J.
			LeBouef, Raymond.
			LeBouef, Tommy J.
			LeBouef, Wiley Sr.
			LeBourgeois, Stephen A.
			LeCompte, Alena.
			LeCompte, Aubrey J.
			LeCompte, Etha.
			LeCompte, Jesse C Jr.
			LeCompte, Jesse Jr.
			LeCompte, Jesse Sr.
			LeCompte, Lyle.
			LeCompte, Patricia F.
			LeCompte, Todd.
			LeCompte, Troy A Sr.
			Ledet, Brad.
			Ledet, Bryan.
			Ledet, Carlton.
			Ledet, Charles J.
			Ledet, Jack A.
			Ledet, Kenneth A.
			Ledet, Mark.
			Ledet, Maxine B.
			Ledet, Mervin.
			Ledet, Phillip John.
			Ledoux, Dennis.
			Ledwig, Joe J.
			Lee, Carl.
			Lee, James K.
			Lee, Marilyn.
			Lee, Otis M Jr.
			Lee, Raymond C.
			Lee, Robert E.
			Lee, Steven J.
			Leek, Mark A.
			LeGaux, Roy J Jr.
			Legendre, Kerry.
			Legendre, Paul.
			Leger, Andre.
			LeGros, Alex M.
			LeJeune, Philip Jr.
			LeJeune, Philip Sr.
			LeJeune, Ramona V.
			LeJeunee, Debbie.
			LeJuine, Eddie R.
			LeLand, Allston Bochet.
			Leland, Rutledge B III.
			Leland, Rutledge B Jr.
			LeLeaux, David.
			Leleux, Kevin J.
			Lemoine, Jeffery Jr.
			Leonard, Dan.
			Leonard, Dexter J Jr.
			Leonard, Micheal A.
			Lepine, Leroy L.
			Lesso, Rudy Jr.
			Lester, Shawn.
			Levron, Dale T.
			Levy, Patrick T.
			Lewis, Kenneth.
			Lewis, Mark Steven.
			Libersat, Anthony R.
			Libersat, Kim.
			Licatino, Daniel Jr.
			Lichenstein, Donald L.
			Lilley, Douglas P.
			Lim, Chhay.
			Lim, Koung.
			Lim, Tav Seng.
			Linden, Eric L.
			Liner, Claude J Jr.
			Liner, Harold.
			Liner, Jerry.
			Liner, Kevin.

Commerce case No.	Commission case No.	Product/country	Petitioners/supporters
			Liner, Michael B Sr.
			Liner, Morris T Jr.
			Liner, Morris T Sr.
			Liner, Tandy M.
			Linh, Pham.
			Linwood, Dolby.
			Lirette, Alex J Sr.
			Lirette, Bobby and Sheri.
			Lirette, Chester Patrick.
			Lirette, Daniel J.
			Lirette, Dean J.
			Lirette, Delvin J Jr.
			Lirette, Delvin Jr.
			Lirette, Desaire J.
			Lirette, Eugis P Sr.
			Lirette, Guy A.
			Lirette, Jeannie.
			Lirette, Kern A.
			Lirette, Ron C.
			Lirette, Russell (Chico) Jr.
			Lirette, Shaun Patrick.
			Lirette, Terry J Sr.
			Little, William A.
			Little, William Boyd.
			Liv, Niem S.
			Livaudais, Ernest J.
			Liverman, Harry R.
			LoBue, Michael Anthony Sr.
			Locascio, Dustin.
			Lockhart, William T.
			Lodrigue, Jimmy A.
			Lodrigue, Kerry.
			Lombardo, Joseph P.
			Lombas, James A Jr.
			Lombas, Kim D.
			Londrie, Harley.
			Long, Cao Thanh.
			Long, Dinh.
			Long, Robert.
			Longo, Ronald S Jr.
			Longwater, Ryan Heath.
			Loomer, Rhonda.
			Lopez, Celestino.
			Lopez, Evelio.
			Lopez, Harry N.
			Lopez, Ron.
			Lopez, Scott.
			Lopez, Stephen R Jr.
			Lord, Michael E Sr.
			Loupe, George Jr.
			Loupe, Ted.
			Lovell, Billy.
			Lovell, Bobby Jason.
			Lovell, Bradford John.
			Lovell, Charles J Jr.
			Lovell, Clayton.
			Lovell, Douglas P.
			Lovell, Jacob G.
			Lovell, Lois.
			Lovell, Slade M.
			Luke, Bernadette C.
			Luke, David.
			Luke, Dustan.
			Luke, Henry.
			Luke, Jeremy Paul.
			Luke, Keith J.
			Luke, Patrick A.
			Luke, Patrick J.
			Luke, Paul Leroy.
			Luke, Rudolph J.
			Luke, Samantha.
			Luke, Sidney Jr.
			Luke, Terry Patrick Jr.
			Luke, Terry Patrick Sr.

Commerce case No.	Commission case No.	Product/country	Petitioners/supporters
			Luke, Timothy.
			Luke, Wiltz J.
			Lund, Ora G.
			Luneau, Ferrell J.
			Luong, Kevin.
			Luong, Thu X.
			Luscy, Lydia.
			Luscy, Richard.
			Lutz, William A.
			Luu, Binh.
			Luu, Vinh.
			Luu, Vinh V.
			Ly, Bui.
			Ly, Hen.
			Ly, Hoc.
			Ly, Kelly D.
			Ly, Nu.
			Ly, Sa.
			Ly, Ven.
			Lyall, Rosalie.
			Lycett, James A.
			Lyons, Berton J.
			Lyons, Berton J Sr.
			Lyons, Jack.
			Lyons, Jerome M.
			Mackey, Marvin Sr.
			Mackie, Kevin L.
			Maggio, Wayne A.
			Magwood, Edwin Wayne.
			Mai, Danny V.
			Mai, Lang V.
			Mai, Tai.
			Mai, Trach Xuan.
			Maise, Rubin J.
			Maise, Todd.
			Majoue, Ernest J.
			Majoue, Nathan L.
			Malcombe, David.
			Mallett, Irvin Ray.
			Mallett, Jimmie.
			Mallett, Lawrence J.
			Mallett, Mervin B.
			Mallett, Rainbow.
			Mallett, Stephney.
			Malley, Ned F Jr.
			Mamolo, Charles H Sr.
			Mamolo, Romeo C Jr.
			Mamolo, Terry A.
			Mancera, Jesus.
			Manuel, Joseph R.
			Manuel, Shon.
			Mao, Chandarasy.
			Mao, Kim.
			Marcel, Michelle.
			Marchese, Joe Jr.
			Mareno, Ansley.
			Mareno, Brent J.
			Mareno, Kenneth L.
			Marie, Allen J.
			Marie, Marty.
			Marmande, Al.
			Marmande, Alidore.
			Marmande, Denise.
			Marquize, Heather.
			Marquize, Kip.
			Marris, Roy C Jr.
			Martin, Darren.
			Martin, Dean J.
			Martin, Dennis.
			Martin, Jody W.
			Martin, John F III.
			Martin, Michael A.
			Martin, Nora S.
			Martin, Rod J.

Commerce case No.	Commission case No.	Product/country	Petitioners/supporters
			Martin, Roland J Jr.
			Martin, Russel J Sr.
			Martin, Sharon J.
			Martin, Tanna G.
			Martin, Wendy.
			Martinez, Carl R.
			Martinez, Henry.
			Martinez, Henry Joseph.
			Martinez, Lupe.
			Martinez, Michael.
			Martinez, Rene J.
			Mason, James F Jr.
			Mason, Johnnie W.
			Mason, Luther.
			Mason, Mary Lois.
			Mason, Percy D Jr.
			Mason, Walter.
			Matherne, Anthony.
			Matherne, Blakland Sr.
			Matherne, Bradley J.
			Matherne, Claude I Jr.
			Matherne, Clifford P.
			Matherne, Curlis J.
			Matherne, Forest J.
			Matherne, George J.
			Matherne, Glenn A.
			Matherne, Grace L.
			Matherne, James C.
			Matherne, James J Jr.
			Matherne, James J Sr.
			Matherne, Joey A.
			Matherne, Keith.
			Matherne, Larry Jr.
			Matherne, Louis M Sr.
			Matherne, Louis Michael.
			Matherne, Nelson.
			Matherne, Thomas G.
			Matherne, Thomas G Jr.
			Matherne, Thomas Jr.
			Matherne, Thomas M Sr.
			Matherne, Wesley J.
			Mathews, Patrick.
			Mathurne, Barry.
			Matte, Martin J Sr.
			Mauldin, Johnny.
			Mauldin, Mary.
			Mauldin, Shannon.
			Mavar, Mark D.
			Mayeux, Lonies A Jr.
			Mayeux, Roselyn P.
			Mayfield, Gary.
			Mayfield, Henry A Jr.
			Mayfield, James J III.
			Mayon, Allen J.
			Mayon, Wayne Sr.
			McAnespy, Henry.
			McAnespy, Louis.
			McCall, Marcus H.
			McCall, R Terry Sr.
			McCarthy, Carliss.
			McCarthy, Michael.
			McCauley, Byron Keith.
			McCauley, Katrina.
			McClantoc, Robert R and Debra.
			McClellan, Eugene Gardner.
			McCormick, Len.
			McCuiston, Denny Carlton.
			McDonald, Allan.
			McElroy, Harry J.
			McFarlain, Merlin J Jr.
			McGuinn, Dennis.
			McIntosh, James Richard.
			McIntyre, Michael D.
			McIver, John H Jr.

Commerce case No.	Commission case No.	Product/country	Petitioners/supporters
			McKendree, Roy.
			McKenzie, George B.
			McKinzie, Bobby E.
			McKoin, Robert.
			McKoin, Robert F Jr.
			McLendon, Jonathon S.
			McNab, Robert Jr.
			McQuaig, Don W.
			McQuaig, Oliver J.
			Medine, David P.
			Mehaffey, John P.
			Melancon, Brent K.
			Melancon, Neva.
			Melancon, Rickey.
			Melancon, Roland Jr.
			Melancon, Roland T Jr.
			Melancon, Sean P.
			Melancon, Terral J.
			Melancon, Timmy J.
			Melanson, Ozimea J III.
			Melerine, Angela.
			Melerine, Brandon T.
			Melerine, Claude A.
			Melerine, Claude A Jr.
			Melerine, Dean J.
			Melerine, Eric W Jr.
			Melerine, John D Sr.
			Melerine, Linda C.
			Melerine, Raymond Joseph.
			Melford, Daniel W Sr.
			Mello, Nelvin.
			Men, Sophin.
			Menendez, Wade E.
			Menesses, Dennis.
			Menesses, James H.
			Menesses, Jimmy.
			Menesses, Louis.
			Menge, Lionel A.
			Menge, Vincent J.
			Mercy, Dempsey.
			Merrick, Harold A.
			Merrick, Kevin Sr.
			Merritt, Darren Sr.
			Messer, Chase.
			Meyers, Otis J.
			Miarm, Soeum.
			Michel, Steven D.
			Middleton, Dan Sr.
			Migues, Henry.
			Migues, Kevin L Sr.
			Milam, Ricky.
			Miles, Ricky David.
			Miley, Donna J.
			Militello, Joseph.
			Miller, David W.
			Miller, Fletcher N.
			Miller, James A.
			Miller, Larry B.
			Miller, Mabry Allen Jr.
			Miller, Michael E.
			Miller, Michele K.
			Miller, Randy A.
			Miller, Rhonda E.
			Miller, Wayne.
			Millet, Leon B.
			Millington, Donnie.
			Millington, Ronnie.
			Millis, Moses.
			Millis, Raeford.
			Millis, Timmie Lee.
			Mine, Derrick.
			Miner, Peter G.
			Minh, Kha.
			Minh, Phuc-Truong.

Commerce case No.	Commission case No.	Product/country	Petitioners/supporters
			Mitchell, Ricky Allen.
			Mitchell, Todd.
			Mitchum, Francis Craig.
			Mixon, G C.
			Mobley, Bryan A.
			Mobley, Jimmy Sr.
			Mobley, Robertson.
			Mock, Frank Sr.
			Mock, Frankie E Jr.
			Mock, Jesse R II.
			Mock, Terry Lyn.
			Molero, Louis F III.
			Molero, Louis Frank.
			Molinere, Al L.
			Molinere, Floyd.
			Molinere, Roland Jr.
			Molinere, Stacey.
			Moll, Angela.
			Moll, Jerry J Jr.
			Moll, Jonathan P.
			Moll, Julius J.
			Moll, Randall Jr.
			Mollere, Randall.
			Mones, Philip J Jr.
			Mones, Tino.
			Moody, Guy D.
			Moore, Carl Stephen.
			Moore, Curtis L.
			Moore, Kenneth.
			Moore, Richard.
			Moore, Willis.
			Morales, Anthony.
			Morales, Clinton A.
			Morales, Daniel Jr.
			Morales, Daniel Sr.
			Morales, David.
			Morales, Elwood J Jr.
			Morales, Eugene J Jr.
			Morales, Eugene J Sr.
			Morales, Kimberly.
			Morales, Leonard L.
			Morales, Phil J Jr.
			Morales, Raul.
			Moran, Scott.
			Moreau, Allen Joseph.
			Moreau, Berlin J Sr.
			Moreau, Daniel R.
			Moreau, Hubert J.
			Moreau, Mary.
			Moreau, Rickey J Sr.
			Morehead, Arthur B Jr.
			Moreno, Ansley.
			Morgan, Harold R.
			Morici, John.
			Morris, Herbert Eugene.
			Morris, Jesse A.
			Morris, Jesse A Sr.
			Morris, Preston.
			Morrison, Stephen D Jr.
			Morton, Robert A.
			Morvant, Keith M.
			Morvant, Patsy Lishman.
			Moschettieri, Chalam.
			Moseley, Kevin R.
			Motley, Michele.
			Mouille, William L.
			Mouton, Ashton J.
			Moveront, Timothy.
			Mund, Mark.
			Murphy, Denis R.
			Muth, Gary J Sr.
			Myers, Joseph E Jr.
			Na, Tran Van.
			Naccio, Andrew.

Commerce case No.	Commission case No.	Product/country	Petitioners/supporters
			Nacio, Lance M. Nacio, Noel. Nacio, Philocles J Sr. Naquin, Alton J. Naquin, Andrew J Sr. Naquin, Antoine Jr. Naquin, Autry James. Naquin, Bobby J and Sheila. Naquin, Bobby Jr. Naquin, Christine. Naquin, Dean J. Naquin, Donna P. Naquin, Earl. Naquin, Earl L. Naquin, Freddie. Naquin, Gerald. Naquin, Henry. Naquin, Irvin J. Naquin, Jerry Joseph Jr. Naquin, Kenneth J Jr. Naquin, Kenneth J Sr. Naquin, Linda L. Naquin, Lionel A Jr. Naquin, Mark D Jr. Naquin, Marty J Sr. Naquin, Milton H IV. Naquin, Oliver A. Naquin, Robert. Naquin, Roy A. Naquin, Vernon. Navarre, Curtis J. Navero, Floyd G Jr. Neal, Craig A. Neal, Roy J Jr. Neely, Bobby H. Nehlig, Raymond E Sr. Neil, Dean. Neil, Jacob. Neil, Julius. Neil, Robert J Jr. Neil, Tommy Sr. Nelson, Billy J Sr. Nelson, Deborah. Nelson, Elisha W. Nelson, Ernest R. Nelson, Faye. Nelson, Fred H Sr. Nelson, Gordon Kent Sr. Nelson, Gordon W III. Nelson, Gordon W Jr. Nelson, John Andrew. Nelson, William Owen Jr. Nelton, Aaron J Jr. Nelton, Steven J. Nettleton, Cody. Newell, Ronald B. Newsome, Thomas E. Newton, Paul J. Nghiem, Billy. Ngo, Chuong Van. Ngo, Duc. Ngo, Hung V. Ngo, Liem Thanh. Ngo, Maxie. Ngo, The T. Ngo, Truong Dinh. Ngo, Van Lo. Ngo, Vu Hoang. Ngoc, Lam Lam. Ngu,Thoi. Nguyen, Amy. Nguyen, An Hoang. Nguyen, Andy Dung. Nguyen, Andy T.

Commerce case No.	Commission case No.	Product/country	Petitioners/supporters
			Nguyen, Anh and Thanh D Tiet.
			Nguyen, Ba.
			Nguyen, Ba Van.
			Nguyen, Bac Van.
			Nguyen, Bao Q.
			Nguyen, Bay Van.
			Nguyen, Be.
			Nguyen, Be.
			Nguyen, Be.
			Nguyen, Be Em.
			Nguyen, Bich Thao.
			Nguyen, Bien V.
			Nguyen, Binh.
			Nguyen, Binh Cong.
			Nguyen, Binh V.
			Nguyen, Binh Van.
			Nguyen, Binh Van.
			Nguyen, Binh Van.
			Nguyen, Bui Van.
			Nguyen, Ca Em.
			Nguyen, Can.
			Nguyen, Can Van.
			Nguyen, Canh V.
			Nguyen, Charlie.
			Nguyen, Chien.
			Nguyen, Chien Van.
			Nguyen, Chin.
			Nguyen, Chinh Van.
			Nguyen, Christian.
			Nguyen, Chuc.
			Nguyen, Chung.
			Nguyen, Chung Van.
			Nguyen, Chuong Hoang.
			Nguyen, Chuong V.
			Nguyen, Chuyen.
			Nguyen, Coolly Dinh.
			Nguyen, Cuong.
			Nguyen, Dai.
			Nguyen, Dan T.
			Nguyen, Dan Van.
			Nguyen, Dan Van.
			Nguyen, Dang.
			Nguyen, Danny.
			Nguyen, David.
			Nguyen, Day Van.
			Nguyen, De Van.
			Nguyen, Den.
			Nguyen, Diem.
			Nguyen, Dien.
			Nguyen, Diep.
			Nguyen, Dinh.
			Nguyen, Dinh V.
			Nguyen, Dong T.
			Nguyen, Dong Thi.
			Nguyen, Dong X.
			Nguyen, Duc.
			Nguyen, Duc Van.
			Nguyen, Dung.
			Nguyen, Dung Anh and Xuan Duong.
			Nguyen, Dung Ngoc.
			Nguyen, Dung Van.
			Nguyen, Dung Van.
			Nguyen, Duoc.
			Nguyen, Duong V.
			Nguyen, Duong Van.
			Nguyen, Duong Xuan.
			Nguyen, Francis N.
			Nguyen, Frank.
			Nguyen, Gary.
			Nguyen, Giang T.
			Nguyen, Giang Truong.
			Nguyen, Giau Van.
			Nguyen, Ha T.
			Nguyen, Ha Van.

Commerce case No.	Commission case No.	Product/country	Petitioners/supporters
			Nguyen, Hai Van.
			Nguyen, Hai Van.
			Nguyen, Han Van.
			Nguyen, Han Van.
			Nguyen, Hang.
			Nguyen, Hanh T.
			Nguyen, Hao Van.
			Nguyen, Harry H.
			Nguyen, Henri Hiep.
			Nguyen, Henry-Trang.
			Nguyen, Hien.
			Nguyen, Hien V.
			Nguyen, Hiep.
			Nguyen, Ho.
			Nguyen, Ho V.
			Nguyen, Hoa.
			Nguyen, Hoa.
			Nguyen, Hoa N.
			Nguyen, Hoa Van.
			Nguyen, Hoang.
			Nguyen, Hoang.
			Nguyen, Hoang T.
			Nguyen, Hoi.
			Nguyen, Hon Xuong.
			Nguyen, Huan.
			Nguyen, Hung.
			Nguyen, Hung.
			Nguyen, Hung.
			Nguyen, Hung M.
			Nguyen, Hung Manh.
			Nguyen, Hung Van.
			Nguyen, Hung-Joseph.
			Nguyen, Huu Nghia.
			Nguyen, Hy Don N.
			Nguyen, Jackie Tin.
			Nguyen, James.
			Nguyen, James N.
			Nguyen, Jefferson.
			Nguyen, Jennifer.
			Nguyen, Jimmy.
			Nguyen, Jimmy.
			Nguyen, Joachim.
			Nguyen, Joe.
			Nguyen, John R.
			Nguyen, John Van.
			Nguyen, Johnny.
			Nguyen, Joseph Minh.
			Nguyen, Kenny Hung Mong.
			Nguyen, Kevin.
			Nguyen, Khai.
			Nguyen, Khanh.
			Nguyen, Khanh and Viet Dinh.
			Nguyen, Khanh Q.
			Nguyen, Khiem.
			Nguyen, Kien Phan.
			Nguyen, Kim.
			Nguyen, Kim Mai.
			Nguyen, Kim Thoa.
			Nguyen, Kinh V.
			Nguyen, Lai.
			Nguyen, Lai.
			Nguyen, Lai Tan.
			Nguyen, Lam.
			Nguyen, Lam Van.
			Nguyen, Lam Van.
			Nguyen, Lam Van.
			Nguyen, Lan.
			Nguyen, Lang.
			Nguyen, Lang.
			Nguyen, Lanh.
			Nguyen, Lap Van.
			Nguyen, Lap Van.
			Nguyen, Le.
			Nguyen, Lien and Hang Luong.

Commerce case No.	Commission case No.	Product/country	Petitioners/supporters
			Nguyen, Lien Thi.
			Nguyen, Linda Oan.
			Nguyen, Linh Thi.
			Nguyen, Linh Van.
			Nguyen, Lintt Danny.
			Nguyen, Lluu.
			Nguyen, Loc.
			Nguyen, Loi.
			Nguyen, Loi.
			Nguyen, Long Phi.
			Nguyen, Long T.
			Nguyen, Long Viet.
			Nguyen, Luom T.
			Nguyen, Mai Van.
			Nguyen, Man.
			Nguyen, Mao-Van.
			Nguyen, Mary.
			Nguyen, Mary.
			Nguyen, Melissa.
			Nguyen, Minh.
			Nguyen, Minh.
			Nguyen, Minh.
			Nguyen, Minh.
			Nguyen, Minh.
			Nguyen, Minh Ngoc.
			Nguyen, Minh Van.
			Nguyen, Moot.
			Nguyen, Mui Van.
			Nguyen, Mung T.
			Nguyen, Muoi.
			Nguyen, My Le Thi.
			Nguyen, My Tan.
			Nguyen, My V.
			Nguyen, Nam Van.
			Nguyen, Nam Van.
			Nguyen, Nam Van.
			Nguyen, Nam Van.
			Nguyen, Nancy.
			Nguyen, Nancy.
			Nguyen, Nghi.
			Nguyen, Nghi Q.
			Nguyen, Nghia.
			Nguyen, Nghiep.
			Nguyen, Ngoc Tim.
			Nguyen, Ngoc Van.
			Nguyen, Nguyet.
			Nguyen, Nhi.
			Nguyen, Nho Van.
			Nguyen, Nina.
			Nguyen, Nuong.
			Nguyen, Peter.
			Nguyen, Peter Thang.
			Nguyen, Peter V.
			Nguyen, Phe.
			Nguyen, Phong.
			Nguyen, Phong Ngoc.
			Nguyen, Phong T.
			Nguyen, Phong Xuan.
			Nguyen, Phu Huu.
			Nguyen, Phuc.
			Nguyen, Phuoc H.
			Nguyen, Phuoc Van.
			Nguyen, Phuong.
			Nguyen, Phuong.
			Nguyen, Quang.
			Nguyen, Quang.
			Nguyen, Quang Dang.
			Nguyen, Quang Dinh.
			Nguyen, Quang Van.
			Nguyen, Quoc Van.
			Nguyen, Quyen Minh.
			Nguyen, Quyen T.
			Nguyen, Quyen-Van.
			Nguyen, Ran T.

Commerce case No.	Commission case No.	Product/country	Petitioners/supporters
			Nguyen, Randon.
			Nguyen, Richard.
			Nguyen, Richard Nghia.
			Nguyen, Rick Van.
			Nguyen, Ricky Tinh.
			Nguyen, Roe Van.
			Nguyen, Rose.
			Nguyen, Sam.
			Nguyen, Sandy Ha.
			Nguyen, Sang Van.
			Nguyen, Sau V.
			Nguyen, Si Ngoc.
			Nguyen, Son.
			Nguyen, Son Thanh.
			Nguyen, Son Van.
			Nguyen, Song V.
			Nguyen, Steve.
			Nguyen, Steve Q.
			Nguyen, Steven Giap.
			Nguyen, Sung.
			Nguyen, Tai.
			Nguyen, Tai The.
			Nguyen, Tai Thi.
			Nguyen, Tam.
			Nguyen, Tam Minh.
			Nguyen, Tam Thanh.
			Nguyen, Tam V.
			Nguyen, Tam Van.
			Nguyen, Tan.
			Nguyen, Ten Tan.
			Nguyen, Thach.
			Nguyen, Thang.
			Nguyen, Thanh.
			Nguyen, Thanh.
			Nguyen, Thanh.
			Nguyen, Thanh Phuc.
			Nguyen, Thanh V.
			Nguyen, Thanh Van.
			Nguyen, Thanh Van.
			Nguyen, Thanh Van.
			Nguyen, Thanh Van.
			Nguyen, Thao.
			Nguyen, Thi Bich Hang.
			Nguyen, Thiet.
			Nguyen, Thiet.
			Nguyen, Tho Duke.
			Nguyen, Thoa D.
			Nguyen, Thoa Thi.
			Nguyen, Thomas.
			Nguyen, Thu.
			Nguyen, Thu and Rose.
			Nguyen, Thu Duc.
			Nguyen, Thu Van.
			Nguyen, Thuan.
			Nguyen, Thuan.
			Nguyen, Thuong.
			Nguyen, Thuong Van.
			Nguyen, Thuy.
			Nguyen, Thuyen.
			Nguyen, Thuyen.
			Nguyen, Tinh.
			Nguyen, Tinh Van.
			Nguyen, Toan.
			Nguyen, Toan Van.
			Nguyen, Tommy.
			Nguyen, Tony.
			Nguyen, Tony.
			Nguyen, Tony.
			Nguyen, Tony D.
			Nguyen, Tony Hong.
			Nguyen, Tony Si.
			Nguyen, Tra.
			Nguyen, Tra.
			Nguyen, Tracy T.

Commerce case No.	Commission case No.	Product/country	Petitioners/supporters
			Nguyen, Tri D.
			Nguyen, Trich Van.
			Nguyen, Trung Van.
			Nguyen, Tu Van.
			Nguyen, Tuan.
			Nguyen, Tuan A.
			Nguyen, Tuan H.
			Nguyen, Tuan Ngoc.
			Nguyen, Tuan Q.
			Nguyen, Tuan Van.
			Nguyen, Tung.
			Nguyen, Tuyen Duc.
			Nguyen, Tuyen Van.
			Nguyen, Ty and Ngoc Ngo.
			Nguyen, Van H.
			Nguyen, Van Loi.
			Nguyen, Vang Van.
			Nguyen, Viet.
			Nguyen, Viet.
			Nguyen, Viet V.
			Nguyen, Viet Van.
			Nguyen, Vinh Van.
			Nguyen, Vinh Van.
			Nguyen, Vinh Van.
			Nguyen, VT.
			Nguyen, Vu Minh.
			Nguyen, Vu T.
			Nguyen, Vu Xuan.
			Nguyen, Vui.
			Nguyen, Vuong V.
			Nguyen, Xuong Kim.
			Nhan, Tran Quoc.
			Nhon, Seri.
			Nichols, Steve Anna.
			Nicholson, Gary.
			Nixon, Leonard.
			Noble, Earl.
			Noland, Terrel W.
			Normand, Timothy.
			Norris, Candace P.
			Norris, John A.
			Norris, Kenneth L.
			Norris, Kevin J.
			Nowell, James E.
			Noy, Phen.
			Nunez, Conrad.
			Nunez, Jody.
			Nunez, Joseph Paul.
			Nunez, Randy.
			Nunez, Wade Joseph.
			Nyuyen, Toan.
			Oberling, Darryl.
			O'Blance, Adam.
			O'Brien, Gary S.
			O'Brien, Mark.
			O'Brien, Michele.
			Ogden, John M.
			Oglesby, Henry.
			Oglesby, Phyllis.
			O'Gwynn, Michael P Sr.
			Ohmer, Eva G.
			Ohmer, George J.
			Olander, Hazel.
			Olander, Rodney.
			Olander, Roland J.
			Olander, Russell J.
			Olander, Thomas.
			Olano, Kevin.
			Olano, Owen J.
			Olano, Shelby F.
			Olds, Malcolm D Jr.
			Olinde, Wilfred J Jr.
			Oliver, Charles.
			O'Neil, Carey.

Commerce case No.	Commission case No.	Product/country	Petitioners/supporters
			Oracoy, Brad R. Orage, Eugene. Orlando, Het. Oteri, Robert F. Oubre, Faron P. Oubre, Thomas W. Ourks, SokHoms K. Owens, Larry E. Owens, Sheppard. Owens, Timothy. Pacaccio, Thomas Jr. Padgett, Kenneth J. Palmer, Gay Ann P. Palmer, John W. Palmer, Mack. Palmisano, Daniel P. Palmisano, Dwayne Jr. Palmisano, Kim. Palmisano, Larry J. Palmisano, Leroy J. Palmisano, Robin G. Pam, Phuong Bui. Parfait, Antoine C Jr. Parfait, Jerry Jr. Parfait, John C. Parfait, Joshua K. Parfait, Mary F. Parfait, Mary S. Parfait, Olden G Jr. Parfait, Robert C Jr. Parfait, Robert C Sr. Parfait, Rodney. Parfait, Shane A. Parfait, Shelton J. Parfait, Timmy J. Parker, Clyde A. Parker, Franklin L. Parker, Paul A. Parker, Percy Todd. Parks, Daniel Duane. Parks, Ellery Doyle Jr. Parrett, Joseph D Jr. Parria, Danny. Parria, Gavin C Sr. Parria, Gillis F Jr. Parria, Gillis F Sr. Parria, Jerry D. Parria, Kip G. Parria, Lionel J Sr. Parria, Louis III. Parria, Louis J Sr. Parria, Louis Jr. Parria, Michael. Parria, Ronald. Parria, Ross. Parria, Troy M. Parrish, Charles. Parrish, Walter L. Passmore, Penny. Pate, Shane. Paterbaugh, Richard. Patingo, Roger D. Paul, Robert Emmett. Payne, John Francis. Payne, Stuart. Peatross, David A. Pelas, James Curtis. Pelas, Jeffery. Pellegrin, Corey P. Pellegrin, Curlynn. Pellegrin, James A Jr. Pellegrin, Jordey. Pellegrin, Karl. Pellegrin, Karl J.

Commerce case No.	Commission case No.	Product/country	Petitioners/supporters
			Pellegrin, Randy.
			Pellegrin, Randy Sr.
			Pellegrin, Rodney J Sr.
			Pellegrin, Samuel.
			Pellegrin, Troy Sr.
			Peltier, Clyde.
			Peltier, Rodney J.
			Pena, Bartolo Jr.
			Pena, Israel.
			Pendarvis, Gracie.
			Pennison, Elaine.
			Pennison, Milton G.
			Pequeno, Julius.
			Percle, David P.
			Perez, Allen M.
			Perez, David J.
			Perez, David P.
			Perez, Derek.
			Perez, Edward Jr.
			Perez, Henry Jr.
			Perez, Joe B.
			Perez, Tilden A Jr.
			Perez, Warren A Jr.
			Perez, Warren A Sr.
			Perez, Wesley.
			Perrin, Dale.
			Perrin, David M.
			Perrin, Edward G Sr.
			Perrin, Errol Joseph Jr.
			Perrin, Jerry J.
			Perrin, Kenneth V.
			Perrin, Kevin.
			Perrin, Kline J Sr.
			Perrin, Kurt M.
			Perrin, Michael.
			Perrin, Michael A.
			Perrin, Murphy P.
			Perrin, Nelson C Jr.
			Perrin, Pershing J Jr.
			Perrin, Robert.
			Perrin, Tim J.
			Perrin, Tony.
			Persohn, William T.
			Peshoff, Kirk Lynn.
			Pete, Alfred F Jr.
			Pete, Alfred F Sr.
			Pfleeger, William A.
			Pham, An V.
			Pham, Anh My.
			Pham, Bob.
			Pham, Cho.
			Pham, Cindy.
			Pham, David.
			Pham, Dung.
			Pham, Dung Phuoc.
			Pham, Dung Phuoc.
			Pham, Duong Van.
			Pham, Gai.
			Pham, Hai.
			Pham, Hai Hong.
			Pham, Hien.
			Pham, Hien C.
			Pham, Hiep.
			Pham, Hieu.
			Pham, Huan Van.
			Pham, Hung.
			Pham, Hung V.
			Pham, Hung V.
			Pham, Huynh.
			Pham, John.
			Pham, Johnny.
			Pham, Joseph S.
			Pham, Kannin.
			Pham, Nga T.

Commerce case No.	Commission case No.	Product/country	Petitioners/supporters
			Pham, Nhung T. Pham, Osmond. Pham, Paul P. Pham, Phong-Thanh. Pham, Phung. Pham, Quoc V. Pham, Steve Ban. Pham, Steve V. Pham, Thai Van. Pham, Thai Van. Pham, Thanh. Pham, Thanh. Pham, Thanh V. Pham, Thinh. Pham, Thinh V. Pham, Tommy V. Pham, Tran and Thu Quang. Pham, Ut Van. Phan, Anh Thi. Phan, Banh Van. Phan, Cong Van. Phan, Dan T. Phan, Hoang. Phan, Hung Thanh. Phan, Johnny. Phan, Lam. Phan, Luyen Van. Phan, Nam V. Phan, Thong. Phan, Tien V. Phan, Toan. Phan, Tu Van. Phat, Lam Mau. Phelps, John D. Phillips, Bruce A. Phillips, Danny D. Phillips, Gary. Phillips, Harry Louis. Phillips, James C Jr. Phillips, Kristrina W. Phipps, AW. Phonthaasa, Khaolop. Phorn, Phen. Pickett, Kathy. Picou, Calvin Jr. Picou, Gary M. Picou, Jennifer. Picou, Jerome J. Picou, Jordan J. Picou, Randy John. Picou, Ricky Sr. Picou, Terry. Pierce, Aaron. Pierce, Dean. Pierce, Elwood. Pierce, Imogene. Pierce, Stanley. Pierce, Taffie Boone. Pierre, Ivy. Pierre, Joseph. Pierre, Joseph C Jr. Pierre, Paul J. Pierre, Ronald J. Pierron, Jake. Pierron, Patsy H. Pierron, Roger D. Pinell, Ernie A. Pinell, Harry J Jr. Pinell, Jody J. Pinell, Randall James. Pinnell, Richard J. Pinnell, Robert. Pitre, Benton J. Pitre, Carol.

Commerce case No.	Commission case No.	Product/country	Petitioners/supporters
			Pitre, Claude A Sr.
			Pitre, Elrod.
			Pitre, Emily B.
			Pitre, Glenn P.
			Pitre, Herbert.
			Pitre, Jeannie.
			Pitre, Leo P.
			Pitre, Robert Jr.
			Pitre, Robin.
			Pitre, Ryan P.
			Pitre, Ted J.
			Pittman, Roger.
			Pizani, Bonnie.
			Pizani, Craig.
			Pizani, Jane.
			Pizani, Terrill J.
			Pizani, Terry M.
			Pizani, Terry M Jr.
			Plaisance, Arthur E.
			Plaisance, Burgess.
			Plaisance, Darren.
			Plaisance, Dean J Sr.
			Plaisance, Dorothy B.
			Plaisance, Dwayne.
			Plaisance, Earl J Jr.
			Plaisance, Errance H.
			Plaisance, Evans P.
			Plaisance, Eves A III.
			Plaisance, Gideons.
			Plaisance, Gillis S.
			Plaisance, Henry A Jr.
			Plaisance, Jacob.
			Plaisance, Jimmie J.
			Plaisance, Joyce.
			Plaisance, Keith.
			Plaisance, Ken G.
			Plaisance, Lawrence J.
			Plaisance, Lucien Jr.
			Plaisance, Peter A Sr.
			Plaisance, Peter Jr.
			Plaisance, Richard J.
			Plaisance, Russel P.
			Plaisance, Russell P Sr.
			Plaisance, Thomas.
			Plaisance, Thomas J.
			Plaisance, Wayne P.
			Plaisance, Whitney III.
			Plork, Phan.
			Poche, Glenn J Jr.
			Poche, Glenn J Sr.
			Pockrus, Gerald.
			Poiencot, Russell Jr.
			Poillion, Charles A.
			Polito, Gerald.
			Polkey, Gary J.
			Polkey, Richard R Jr.
			Polkey, Ronald.
			Polkey, Shawn Michael.
			Pollet, Lionel J Sr.
			Pomgoria, Mario.
			Ponce, Ben.
			Ponce, Lewis B.
			Poon, Raymond.
			Pope, Robert.
			Popham, Winford A.
			Poppell, David M.
			Porche, Ricky J.
			Portier, Bobby.
			Portier, Chad.
			Portier, Corinne L.
			Portier, Penelope J.
			Portier, Robbie.
			Portier, Russel A Sr.
			Portier, Russell.

Commerce case No.	Commission case No.	Product/country	Petitioners/supporters
			Potter, Hubert Edward Jr.
			Potter, Robert D.
			Potter, Robert J.
			Pounds, Terry Wayne.
			Powers, Clyde T.
			Prejean, Dennis J.
			Price, Carl.
			Price, Curtis.
			Price, Edwin J.
			Price, Franklin J.
			Price, George J Sr.
			Price, Norris J Sr.
			Price, Steve J Jr.
			Price, Timmy T.
			Price, Wade J.
			Price, Warren J.
			Prihoda, Steve.
			Primeaux, Scott.
			Pritchard, Dixie J.
			Pritchard, James Ross Jr.
			Prosperie, Claude J Jr.
			Prosperie, Myron.
			Prout, Rollen.
			Prout, Sharonski K.
			Prum, Thou.
			Pugh, Charles D Jr.
			Pugh, Charles Sr.
			Pugh, Cody.
			Pugh, Deanna.
			Pugh, Donald.
			Pugh, Nickolas.
			Punch, Alvin Jr.
			Punch, Donald J.
			Punch, Todd M.
			Punch, Travis J.
			Purata, Maria.
			Purse, Emil.
			Purvis, George.
			Quach, Duc.
			Quach, James D.
			Quach, Joe.
			Quach, Si Tan.
			Quinn, Dora M.
			Racca, Charles.
			Racine, Sylvan P Jr.
			Radulic, Igor.
			Ragas, Albert G.
			Ragas, Gene.
			Ragas, John D.
			Ragas, Jonathan.
			Ragas, Richard A.
			Ragas, Ronda S.
			Ralph, Lester B.
			Ramirez, Alfred J Jr.
			Randazzo, John A Jr.
			Randazzo, Rick A.
			Rando, Stanley D.
			Ranko, Ellis Gerald.
			Rapp, Dwayne.
			Rapp, Leroy and Sedonia.
			Rawlings, John H Sr.
			Rawlings, Ralph E.
			Rawls, Norman E.
			Ray, Leo.
			Ray, William C Jr.
			Raynor, Steven Earl.
			Readenour, Kelty O.
			Reagan, Roy.
			Reason, Patrick W.
			Reaux, Paul S Sr.
			Reaves, Craig A.
			Reaves, Laten.
			Rebert, Paul J Sr.
			Rebert, Steve M Jr.

Commerce case No.	Commission case No.	Product/country	Petitioners/supporters
			Rebstock, Charles.
			Recter, Lance Jr.
			Rector, Warren L.
			Redden, Yvonne.
			Regnier, Leoncea B.
			Remondet, Garland Jr.
			Renard, Lanny.
			Reno, Edward.
			Reno, George C.
			Reno, George H.
			Reno, George T.
			Reno, Harry.
			Revell, Ben David.
			Reyes, Carlton.
			Reyes, Dwight D Sr.
			Reynon, Marcello Jr.
			Rhodes, Randolph N.
			Rhoto, Christopher L.
			Ribardi, Frank A.
			Rich, Wanda Heafner.
			Richard, Bruce J.
			Richard, David L.
			Richard, Edgar J.
			Richard, James Ray.
			Richard, Melissa.
			Richard, Randall K.
			Richardson, James T.
			Richert, Daniel E.
			Richo, Earl Sr.
			Richoux, Dudley Donald Jr.
			Richoux, Irvin J Jr.
			Richoux, Judy.
			Richoux, Larry.
			Richoux, Mary A.
			Riego, Raymond A.
			Riffle, Josiah B.
			Rigaud, Randall Ryan.
			Riggs, Jeffrey B.
			Riley, Jackie Sr.
			Riley, Raymond.
			Rinkus, Anthony J III.
			Rios, Amado.
			Ripp, Norris M.
			Robbins, Tony.
			Robert, Dan S.
			Roberts, Michael A.
			Robertson, Kevin.
			Robeson, Richard S Jr.
			Robichaux, Craig J.
			Robin, Alvin G.
			Robin, Cary Joseph.
			Robin, Charles R III.
			Robin, Danny J.
			Robin, Donald.
			Robin, Floyd A.
			Robin, Kenneth J Sr.
			Robin, Ricky R.
			Robinson, Johnson P III.
			Robinson, Walter.
			Roccaforte, Clay.
			Rodi, Dominick R.
			Rodi, Rhonda.
			Rodrigue, Brent J.
			Rodrigue, Carrol Sr.
			Rodrigue, Glenn.
			Rodrigue, Lerlene.
			Rodrigue, Reggie Sr.
			Rodrigue, Sonya.
			Rodrigue, Wayne.
			Rodriguez, Barry.
			Rodriguez, Charles V Sr.
			Rodriguez, Gregory.
			Rodriguez, Jesus.
			Rodriguez, Joseph C Jr.

Commerce case No.	Commission case No.	Product/country	Petitioners/supporters
			Roeum, Orn.
			Rogers, Barry David.
			Rogers, Chad.
			Rogers, Chad M.
			Rogers, Kevin J.
			Rogers, Nathan J.
			Rojas, Carlton J Sr.
			Rojas, Curtis Sr.
			Rojas, Dennis J Jr.
			Rojas, Dennis J Sr.
			Rojas, Gordon V.
			Rojas, Kerry D.
			Rojas, Kerry D Jr.
			Rojas, Randy J Sr.
			Rojas, Raymond J Jr.
			Roland, Brad.
			Roland, Mathias C.
			Roland, Vincent.
			Rollins, Theresa.
			Rollo, Wayne A.
			Rome, Victor J IV.
			Romero, D H.
			Romero, Kardel J.
			Romero, Norman.
			Romero, Philip J.
			Ronquille, Glenn.
			Ronquille, Norman C.
			Ronquillo, Earl.
			Ronquillo, Richard J.
			Ronquillo, Timothy.
			Roseburrough, Charles R Jr.
			Ross, Dorothy.
			Ross, Edward Danny Jr.
			Ross, Leo L.
			Ross, Robert A.
			Roth, Joseph F Jr.
			Roth, Joseph M Jr.
			Rotolo, Carolyn.
			Rotolo, Feliz.
			Rouse, Jimmy.
			Roussel, Michael D Jr.
			Roy, Henry Lee Jr.
			Rudolph, Chad A.
			Ruiz, Donald W.
			Ruiz, James L.
			Ruiz, Paul E.
			Ruiz, Paul R.
			Russell, Bentley R.
			Russell, Casey.
			Russell, Daniel.
			Russell, James III.
			Russell, Julie Ann.
			Russell, Michael J.
			Russell, Nicholas M.
			Russell, Paul.
			Rustick, Kenneth.
			Ruttley, Adrian K.
			Ruttley, Ernest T Jr.
			Ruttley, JT.
			Ryan, James C Sr.
			Rybiski, Rhebb R.
			Ryder, Luther V.
			Sadler, Stewart.
			Sagnes, Everett.
			Saha, Amanda K.
			Saling, Don M.
			Saltalamacchia, Preston J.
			Saltalamacchia, Sue A.
			Salvato, Lawrence Jr.
			Samanie, Caroll J.
			Samanie, Frank J.
			Samsome, Don.
			Sanamo, Troy P.
			Sanchez, Augustine.

Commerce case No.	Commission case No.	Product/country	Petitioners/supporters
			Sanchez, Jeffery A.
			Sanchez, Juan.
			Sanchez, Robert A.
			Sanders, William Shannon.
			Sandras, R J.
			Sandras, R J Jr.
			Sandrock, Roy R III.
			Santini, Lindberg W Jr.
			Santiny, James.
			Santiny, Patrick.
			Sapia, Carroll J Jr.
			Sapia, Eddie J Jr.
			Sapia, Willard.
			Saturday, Michael Rance.
			Sauce, Carlton Joseph.
			Sauce, Joseph C Jr.
			Saucier, Houston J.
			Sauls, Russell.
			Savage, Malcolm H.
			Savant, Raymond.
			Savoie, Allen.
			Savoie, Brent T.
			Savoie, James.
			Savoie, Merlin F Jr.
			Savoie, Reginald M II.
			Sawyer, Gerald.
			Sawyer, Rodney.
			Scarabin, Clifford.
			Scarabin, Michael J.
			Schaffer, Kelly.
			Schaubhut, Curry A.
			Schellinger, Lester B Jr.
			Schexnaydre, Michael.
			Schirmer, Robert Jr.
			Schjott, Joseph J Sr.
			Schlindwein, Henry.
			Schmit, Paul A Jr.
			Schmit, Paul A Sr.
			Schmit, Victor J Jr.
			Schouest, Ellis J III.
			Schouest, Ellis Jr.
			Schouest, Juston.
			Schouest, Mark.
			Schouest, Noel.
			Schrimpf, Robert H Jr.
			Schultz, Troy A.
			Schwartz, Sidney.
			Scott, Aaron J.
			Scott, Audie B.
			Scott, James E III.
			Scott, Milford P.
			Scott, Paul.
			Seabrook, Terry G.
			Seal, Charles T.
			Seal, Joseph G.
			Seaman, Garry.
			Seaman, Greg.
			Seaman, Ollie L Jr.
			Seaman, Ollie L Sr.
			Seang, Meng.
			Sehon, Robert Craig.
			Sekul, Morris G.
			Sekul, S George.
			Sellers, Isaac Charles.
			Seng, Sophan.
			Serigne, Adam R.
			Serigne, Elizabeth.
			Serigne, James J III.
			Serigne, Kimmie J.
			Serigne, Lisa M.
			Serigne, Neil.
			Serigne, O'Neil N.
			Serigne, Richard J Sr.
			Serigne, Rickey N.

Commerce case No.	Commission case No.	Product/country	Petitioners/supporters
			Serigne, Ronald Raymond.
			Serigne, Ronald Roch.
			Serigne, Ross.
			Serigny, Gail.
			Serigny, Wayne A.
			Serpas, Lenny Jr.
			Sessions, William O III.
			Sessions, William O Jr.
			Sevel, Michael D.
			Sevin, Carl Anthony.
			Sevin, Earline.
			Sevin, Janell A.
			Sevin, Joey.
			Sevin, Nac J.
			Sevin, O'Neil and Symantha.
			Sevin, Phillip T.
			Sevin, Shane.
			Sevin, Shane Anthony.
			Sevin, Stanley J.
			Sevin, Willis.
			Seymour, Janet A.
			Shackelford, David M.
			Shaffer, Curtis E.
			Shaffer, Glynnon D.
			Shay, Daniel A.
			Shilling, Jason.
			Shilling, L E.
			Shugars, Robert L.
			Shutt, Randy.
			Sifuentes, Esteban.
			Sifuentes, Fernando.
			Silver, Curtis A Jr.
			Simon, Curnis.
			Simon, John.
			Simon, Leo.
			Simpson, Mark.
			Sims, Donald L.
			Sims, Mike.
			Singley, Charlie Sr.
			Singley, Glenn.
			Singley, Robert Joseph.
			Sirgo, Jace.
			Sisung, Walter.
			Sisung, Walter Jr.
			Skinner, Gary M Sr.
			Skinner, Richard.
			Skipper, Malcolm W.
			Skrmetta, Martin J.
			Smelker, Brian H.
			Smith, Brian.
			Smith, Carl R Jr.
			Smith, Clark W.
			Smith, Danny.
			Smith, Danny M Jr.
			Smith, Donna.
			Smith, Elmer T Jr.
			Smith, Glenda F.
			Smith, James E.
			Smith, Margie T.
			Smith, Mark A.
			Smith, Nancy F.
			Smith, Raymond C Sr.
			Smith, Tim.
			Smith, Walter M Jr.
			Smith, William T.
			Smithwick, Ted Wayne.
			Smoak, Bill.
			Smoak, William W III.
			Snell, Erick.
			Snodgrass, Sam.
			Soeung, Phat.
			Soileau, John C Sr.
			Sok, Kheng.
			Sok, Montha.

Commerce case No.	Commission case No.	Product/country	Petitioners/supporters
			Sok, Nhip.
			Solet, Darren.
			Solet, Donald M.
			Solet, Joseph R.
			Solet, Raymond J.
			Solorzano, Marilyn.
			Son, Kim.
			Son, Sam Nang.
			Son, Samay.
			Son, Thuong Cong.
			Soprano, Daniel.
			Sork, William.
			Sou, Mang.
			Soudelier, Louis Jr.
			Soudelier, Shannon.
			Sour, Yem Kim.
			Southerland, Robert.
			Speir, Barbara Kay.
			Spell, Jeffrey B.
			Spell, Mark A.
			Spellmeyer, Joel F Sr.
			Spencer, Casey.
			Spiers, Donald A.
			Sprinkle, Avery M.
			Sprinkle, Emery Shelton Jr.
			Sprinkle, Joseph Warren.
			Squarsich, Kenneth J.
			Sreiy, Siphan.
			St Amant, Dana A.
			St Ann, Mr and Mrs Jerome K.
			St Pierre, Darren.
			St Pierre, Scott A.
			Staves, Patrick.
			Stechmann, Chad.
			Stechmann, Karl J.
			Stechmann, Todd.
			Steele, Arnold D Jr.
			Steele, Henry H III.
			Steen, Carl L.
			Steen, James D.
			Steen, Kathy G.
			Stein, Norris J Jr.
			Stelly, Adlar.
			Stelly, Carl A.
			Stelly, Chad P.
			Stelly, Delores.
			Stelly, Sandrus J Sr.
			Stelly, Sandrus Jr.
			Stelly, Toby J.
			Stelly, Veronica G.
			Stelly, Warren.
			Stephenson, Louis.
			Stevens, Alvin.
			Stevens, Curtis D.
			Stevens, Donald.
			Stevens, Glenda.
			Stewart, Chester Jr.
			Stewart, Derald.
			Stewart, Derek.
			Stewart, Fred.
			Stewart, Jason F.
			Stewart, Ronald G.
			Stewart, William C.
			Stiffler, Thanh.
			Stipelcovich, Lawrence L.
			Stipelcovich, Todd J.
			Stockfett, Brenda.
			Stokes, Todd.
			Stone-Rinkus, Pamela.
			Strader, Steven R.
			Strickland, Kenneth.
			Strickland, Rita G.
			Stuart, James Vernon.
			Stutes, Rex E.

Commerce case No.	Commission case No.	Product/country	Petitioners/supporters
			Sulak, Billy W.
			Sun, Hong Sreng.
			Surmik, Donald D.
			Swindell, Keith M.
			Sylve, Dennis A.
			Sylve, James L.
			Sylve, Nathan.
			Sylve, Scott.
			Sylvesr, Paul A.
			Ta, Ba Van.
			Ta, Chris.
			Tabb, Calvin.
			Taliancich, Andrew.
			Taliancich, Ivan.
			Taliancich, Joseph M.
			Taliancich, Srecka.
			Tan, Ho Dung.
			Tan, Hung.
			Tan, Lan T.
			Tan, Ngo The.
			Tang, Thanh.
			Tanner, Robert Charles.
			Taravella, Raymond.
			Tassin, Alton J.
			Tassin, Keith P.
			Tate, Archie P.
			Tate, Terrell.
			Tauzier, Kevin M.
			Taylor, Doyle L.
			Taylor, Herman R.
			Taylor, Herman R Jr.
			Taylor, J P Jr.
			Taylor, John C.
			Taylor, Leander J Sr.
			Taylor, Leo Jr.
			Taylor, Lewis.
			Taylor, Nathan L.
			Taylor, Robert L.
			Taylor, Robert M.
			Teap, Phal.
			Tek, Heng.
			Templat, Paul.
			Terluin, John L III.
			Terrebonne, Adrein Scott.
			Terrebonne, Alphonse J.
			Terrebonne, Alton S Jr.
			Terrebonne, Alton S Sr.
			Terrebonne, Carol.
			Terrebonne, Carroll.
			Terrebonne, Chad.
			Terrebonne, Chad Sr.
			Terrebonne, Daniel J.
			Terrebonne, Donavon J.
			Terrebonne, Gary J Sr.
			Terrebonne, Jimmy Jr.
			Terrebonne, Jimmy Sr.
			Terrebonne, Kline A.
			Terrebonne, Lanny.
			Terrebonne, Larry F Jr.
			Terrebonne, Scott.
			Terrebonne, Steven.
			Terrebonne, Steven.
			Terrebonne, Toby J.
			Terrel, Chad J Sr.
			Terrell, C Todd.
			Terrio, Brandon James.
			Terrio, Harvey J Jr.
			Terry, Eloise P.
			Tesvich, Kuzma D.
			Thac, Dang Van.
			Thach, Phuong.
			Thai, Huynh Tan.
			Thai, Paul.
			Thai, Thomas.

Commerce case No.	Commission case No.	Product/country	Petitioners/supporters
			Thanh, Thien.
			Tharpe, Jack.
			Theriot, Anthony.
			Theriot, Carroll A Jr.
			Theriot, Clay J Jr.
			Theriot, Craig A.
			Theriot, Dean P.
			Theriot, Donnie.
			Theriot, Jeffery C.
			Theriot, Larry J.
			Theriot, Lynn.
			Theriot, Mark A.
			Theriot, Roland P Jr.
			Theriot, Wanda J.
			Thibodaux, Jared.
			Thibodeaux, Bart James.
			Thibodeaux, Brian A.
			Thibodeaux, Brian M.
			Thibodeaux, Calvin A Jr.
			Thibodeaux, Fay F.
			Thibodeaux, Glenn P.
			Thibodeaux, Jeffrey.
			Thibodeaux, Jonathan.
			Thibodeaux, Josephine.
			Thibodeaux, Keith.
			Thibodeaux, Tony J.
			Thibodeaux, Warren J.
			Thidobaux, James V Sr.
			Thiet, Tran.
			Thomas, Alvin.
			Thomas, Brent.
			Thomas, Dally S.
			Thomas, Janie G.
			Thomas, John Richard.
			Thomas, Kenneth Ward.
			Thomas, Monica P.
			Thomas, Ralph L Jr.
			Thomas, Ralph Lee Jr.
			Thomas, Randall.
			Thomas, Robert W.
			Thomas, Willard N Jr.
			Thomassie, Gerard.
			Thomassie, Nathan A.
			Thomassie, Philip A.
			Thomassie, Ronald J.
			Thomassie, Tracy Joseph.
			Thompson, Bobbie.
			Thompson, David W.
			Thompson, Edwin A.
			Thompson, George.
			Thompson, James D Jr.
			Thompson, James Jr.
			Thompson, John E.
			Thompson, John R.
			Thompson, Randall.
			Thompson, Sammy.
			Thompson, Shawn.
			Thong, R.
			Thonn, John J Jr.
			Thonn, Victor J.
			Thorpe, Robert Lee Jr.
			Thurman, Charles E.
			Tiet, Thanh Duc.
			Tilghman, Gene E.
			Tillett, Billy Carl.
			Tillman, Lewis A Jr.
			Tillman, Timothy P and Yvonne M.
			Tillotson, Pat.
			Tinney, Mark A.
			Tisdale, Georgia W.
			Tiser, Oscar.
			Tiser, Thomas C Jr.
			Tiser, Thomas C Sr.
			To, Cang Van.

Commerce case No.	Commission case No.	Product/country	Petitioners/supporters
			To, Du Van.
			Todd, Fred Noel.
			Todd, Patricia J.
			Todd, Rebecca G.
			Todd, Robert C and Patricia J.
			Todd, Vonnie Frank Jr.
			Tompkins, Gerald Paul II.
			Toney, George Jr.
			Tong, Hai V.
			Tony, Linh C.
			Toomer, Christina Abbott.
			Toomer, Christy.
			Toomer, Frank G Jr.
			Toomer, Jeffrey E.
			Toomer, Kenneth.
			Toomer, Lamar K.
			Toomer, Larry Curtis and Tina.
			Toomer, William Kemp.
			Torrible, David P.
			Torrible, Jason.
			Touchard, Anthony H.
			Touchard, John B Jr.
			Touchard, Paul V Jr.
			Touchet, Eldridge III.
			Touchet, Eldridge Jr.
			Toups, Anthony G.
			Toups, Bryan.
			Toups, Jeff.
			Toups, Jimmie J.
			Toups, Kim.
			Toups, Manuel.
			Toups, Ted.
			Toups, Tommy.
			Toureau, James.
			Tower, H Melvin.
			Townsend, Harmon Lynn.
			Townsend, Marion Brooks.
			Tra, Hop T.
			Trabeau, James D.
			Trahan, Allen A Jr.
			Trahan, Alvin Jr.
			Trahan, Druby.
			Trahan, Dudley.
			Trahan, Elie J.
			Trahan, Eric J.
			Trahan, James.
			Trahan, Karen C.
			Trahan, Lynn P Sr.
			Trahan, Ricky.
			Trahan, Ronald J.
			Trahan, Tracey L.
			Trahan, Wayne Paul.
			Tran, Allen Hai.
			Tran, Andana.
			Tran, Anh.
			Tran, Anh.
			Tran, Anh N.
			Tran, Bay V.
			Tran, Bay Van.
			Tran, Binh.
			Tran, Binh Van.
			Tran, Ca Van.
			Tran, Cam Van.
			Tran, Chau V.
			Tran, Chau Van.
			Tran, Chau Van.
			Tran, Chi T.
			Tran, Christina Phuong.
			Tran, Chu V.
			Tran, Cuong.
			Tran, Cuong.
			Tran, Danny Duc.
			Tran, Den.
			Tran, Dien.

Commerce case No.	Commission case No.	Product/country	Petitioners/supporters
			Tran, Dinh M. Tran, Dinh Q. Tran, Doan. Tran, Dung Van. Tran, Duoc. Tran, Duoc. Tran, Duong. Tran, Eric. Tran, Francis. Tran, Francis. Tran, Giang. Tran, Giao. Tran, Ha Mike. Tran, Hai. Tran, Hien H. Tran, Hiep Phuoc. Tran, Hieu. Tran, Hoa. Tran, Hoa. Tran, Hue T. Tran, Huey. Tran, Hung. Tran, Hung. Tran, Hung. Tran, Hung P. Tran, Hung Van. Tran, Hung Van. Tran, Hung Viet. Tran, James N. Tran, John. Tran, Johnny Dinh. Tran, Joseph. Tran, Joseph T. Tran, Khan Van. Tran, Khanh. Tran, Kim. Tran, Kim Chi Thi. Tran, Lan Tina. Tran, Le and Phat Le. Tran, Leo Van. Tran, Loan. Tran, Long. Tran, Long Van. Tran, Luu Van. Tran, Ly. Tran, Ly Van. Tran, Mai Thi. Tran, Mary. Tran, Miel Van. Tran, Mien. Tran, Mike. Tran, Mike Dai. Tran, Minh Huu. Tran, Muoi. Tran, My T. Tran, Nam Van. Tran, Nang Van. Tran, Nghia and T Le Banh. Tran, Ngoc. Tran, Nhanh Van. Tran, Nhieu T. Tran, Nhieu Van. Tran, Nho. Tran, Peter. Tran, Phu Van. Tran, Phuc D. Tran, Phuc V. Tran, Phung. Tran, Quan Van. Tran, Quang Quang. Tran, Quang T. Tran, Quang Van. Tran, Qui V. Tran, Quy Van.

Commerce case No.	Commission case No.	Product/country	Petitioners/supporters
			Tran, Ran Van.
			Tran, Sarah T.
			Tran, Sau.
			Tran, Scotty.
			Tran, Son.
			Tran, Son Van.
			Tran, Steven Tuan.
			Tran, Tam.
			Tran, Te Van.
			Tran, Than.
			Tran, Thang Van.
			Tran, Thanh.
			Tran, Thanh.
			Tran, Thanh Van.
			Tran, Theresa.
			Tran, Thi.
			Tran, Thich Van.
			Tran, Thien.
			Tran, Thien Van.
			Tran, Thiet.
			Tran, Tommy.
			Tran, Tony.
			Tran, Tri.
			Tran, Trinh.
			Tran, Trung.
			Tran, Trung Van.
			Tran, Tu.
			Tran, Tuan.
			Tran, Tuan.
			Tran, Tuan Minh.
			Tran, Tuong Van.
			Tran, Tuyet Thi.
			Tran, Van T.
			Tran, Victor.
			Tran, Vinh.
			Tran, Vinh Q.
			Tran, Vinh Q.
			Tran, Vui Kim.
			Trang, Tan.
			Trapp, Tommy.
			Treadaway, Michael.
			Tregle, Curtis.
			Treloar, William Paul.
			Treuil, Gary J.
			Trevino, Manuel.
			Treybig, E H ''Buddy'' Jr.
			Triche, Donald G.
			Trieu, Hiep and Jackie.
			Trieu, Hung Hoa.
			Trieu, Jasmine and Ly.
			Trieu, Lorie and Tam.
			Trieu, Tam.
			Trinh, Christopher B.
			Trinh, Philip P.
			Trosclair, Clark K.
			Trosclair, Clark P.
			Trosclair, Eugene P.
			Trosclair, James J.
			Trosclair, Jerome.
			Trosclair, Joseph.
			Trosclair, Lori.
			Trosclair, Louis V.
			Trosclair, Patricia.
			Trosclair, Randy.
			Trosclair, Ricky.
			Trosclair, Wallace Sr.
			Truong, Andre.
			Truong, Andre V.
			Truong, Be Van.
			Truong, Benjamin.
			Truong, Dac.
			Truong, Huan.
			Truong, Kim.
			Truong, Nhut Van.

Commerce case No.	Commission case No.	Product/country	Petitioners/supporters
			Truong, Steve.
			Truong, Tham T.
			Truong, Thanh Minh.
			Truong, Them Van.
			Truong, Thom.
			Truong, Timmy.
			Trutt, George W Sr.
			Trutt, Wanda.
			Turlich, Mervin A.
			Turner, Calvin L.
			Tyre, John.
			Upton, Terry R.
			Valentino, J G Jr.
			Valentino, James.
			Vallot, Christopher A.
			Vallot, Nancy H.
			Valure, Hugh P.
			Van Alsburg, Charles.
			Van Gordstnoven, Jean J.
			Van Nguyen, Irving.
			Van, Than.
			Van, Vui.
			Vanacor, Kathy D.
			Vanacor, Malcolm J Sr.
			Vanicor, Bobbie.
			VanMeter, Matthew T.
			VanMeter, William Earl.
			Varney, Randy L.
			Vath, Raymond S.
			Veasel, William E III.
			Vegas, Brien J.
			Vegas, Percy J.
			Vegas, Terry J.
			Vegas, Terry J Jr.
			Vegas, Terry Jr.
			Vela, Peter.
			Verdin, Aaron.
			Verdin, Av.
			Verdin, Bradley J.
			Verdin, Brent A.
			Verdin, Charles A.
			Verdin, Charles E.
			Verdin, Coy P.
			Verdin, Curtis A Jr.
			Verdin, Delphine.
			Verdin, Diana A.
			Verdin, Ebro W.
			Verdin, Eric P.
			Verdin, Ernest Joseph Sr.
			Verdin, Jeff C.
			Verdin, Jeffrey A.
			Verdin, Jessie J.
			Verdin, John P.
			Verdin, Joseph.
			Verdin, Joseph A Jr.
			Verdin, Joseph Cleveland.
			Verdin, Joseph D Jr.
			Verdin, Joseph S.
			Verdin, Joseph W Jr.
			Verdin, Justilien G.
			Verdin, Matthew W Sr.
			Verdin, Michel A.
			Verdin, Paul E.
			Verdin, Perry Anthony.
			Verdin, Rodney.
			Verdin, Rodney P.
			Verdin, Rodney P.
			Verdin, Skylar.
			Verdin, Timmy J.
			Verdin, Toby.
			Verdin, Tommy P.
			Verdin, Tony J.
			Verdin, Troy.
			Verdin, Vincent.

Commerce case No.	Commission case No.	Product/country	Petitioners/supporters
			Verdin, Viness Jr. Verdin, Wallace P. Verdin, Webb A Sr. Verdin, Wesley D Sr. Verdine, Jimmy R. Vermeulen, Joseph Thomas. Verret, Darren L. Verret, Donald J. Verret, Ernest J Sr. Verret, James A. Verret, Jean E. Verret, Jimmy J Sr. Verret, Johnny R. Verret, Joseph L. Verret, Paul L. Verret, Preston. Verret, Quincy. Verret, Ronald Paul Sr. Versaggi, Joseph A. Versaggi, Salvatore J. Vicknair, Brent J Sr. Vicknair, Duane P. Vicknair, Henry Dale. Vicknair, Ricky A. Vidrine, Bill and Kathi. Vidrine, Corey. Vidrine, Richard. Vila, William F. Villers, Joseph A. Vincent, Gage Tyler. Vincent, Gene. Vincent, Gene B. Vincent, Robert N. Vise, Charles E III. Vizier, Barry A. Vizier, Christopher. Vizier, Clovis J III. Vizier, Douglas M. Vizier, Tommie Jr. Vo, Anh M. Vo, Chin Van. Vo, Dam. Vo, Dan M. Vo, Dany. Vo, Day V. Vo, Duong V. Vo, Dustin. Vo, Hai Van. Vo, Hanh Xuan. Vo, Hien Van. Vo, Hoang The. Vo, Hong. Vo, Hung Thanh. Vo, Huy K. Vo, Johnny. Vo, Kent. Vo, Lien Van. Vo, Man. Vo, Mark Van. Vo, Minh Hung. Vo, Minh Ngoc. Vo, Minh Ray. Vo, Mong V. Vo, My Dung Thi. Vo, My Lynn. Vo, Nga. Vo, Nhon Tai. Vo, Nhu Thanh. Vo, Quang Minh. Vo, Sang M. Vo, Sanh M. Vo, Song V. Vo, Tan Thanh. Vo, Tan Thanh.

Commerce case No.	Commission case No.	Product/country	Petitioners/supporters
			Vo, Thanh Van.
			Vo, Thao.
			Vo, Thuan Van.
			Vo, Tien Van.
			Vo, Tom.
			Vo, Tong Ba.
			Vo, Trao Van.
			Vo, Truong.
			Vo, Van Van.
			Vo, Vi Viet.
			Vodopija, Benjamin S.
			Vogt, James L.
			Voisin, Eddie James.
			Voisin, Joyce.
			Voison, Jamie.
			Von Harten, Harold L.
			Vona, Michael A.
			Vongrith, Richard.
			Vossler, Kirk.
			Vu, Hung.
			Vu, John H.
			Vu, Khanh.
			Vu, Khoi Van.
			Vu, Quan Quoc.
			Vu, Ruyen Viet.
			Vu, Sac.
			Vu, Sean.
			Vu, Tam.
			Vu, Thiem Ngoc.
			Vu, Thuy.
			Vu, Tom.
			Vu, Tu Viet.
			Vu, Tuyen Jack.
			Vu, Tuyen Viet.
			Wade, Calvin J Jr.
			Wade, Gerard.
			Waguespack, David M Sr.
			Waguespack, Randy P II.
			Wainwright, Vernon.
			Walker, Jerry.
			Walker, Rogers H.
			Wallace, Dennis.
			Wallace, Edward.
			Wallace, John A.
			Wallace, John K.
			Wallace, Trevis L.
			Waller, Jack Jr.
			Waller, John M.
			Waller, Mike.
			Wallis, Craig A.
			Wallis, Keith.
			Walters, Samuel G.
			Walton, Marion M.
			Wannage, Edward Joseph.
			Wannage, Fred Jr.
			Wannage, Frederick W Sr.
			Ward, Clarence Jr.
			Ward, Olan B.
			Ward, Walter M.
			Washington, Clifford.
			Washington, John Emile III.
			Washington, Kevin.
			Washington, Louis N.
			Wattigney, Cecil K Jr.
			Wattigney, Michael.
			Watts, Brandon A.
			Watts, Warren.
			Webb, Bobby.
			Webb, Bobby N.
			Webb, Josie M.
			Webre, Donald.
			Webre, Dudley A.
			Webster, Harold.
			Weeks, Don Franklin.

Commerce case No.	Commission case No.	Product/country	Petitioners/supporters
			Weems, Laddie E.
			Weinstein, Barry C.
			Weiskopf, Rodney.
			Weiskopf, Rodney Sr.
			Weiskopf, Todd.
			Welch, Amos J.
			Wells, Douglas E.
			Wells, Stephen Ray.
			Wendling, Steven W.
			Wescovich, Charles W.
			Wescovich, Wesley Darryl.
			Whatley, William J.
			White, Allen Sr.
			White, Charles.
			White, Charles Fulton.
			White, David L.
			White, Gary Farrell.
			White, James Hugh.
			White, Perry J.
			White, Raymond.
			White, Robert Sr.
			Wicher, John.
			Wiggins, Chad M Sr.
			Wiggins, Ernest.
			Wiggins, Harry L.
			Wiggins, Kenneth A.
			Wiggins, Matthew.
			Wilbur, Gerald Anthony.
			Wilcox, Robert.
			Wiles, Alfred Adam.
			Wiles, Glen Gilbert.
			Wiles, Sonny Joel Sr.
			Wilkerson, Gene Dillard and Judith.
			Wilkinson, William Riley.
			Williams, Allen Jr.
			Williams, Andrew.
			Williams, B Dean.
			Williams, Clyde L.
			Williams, Dale A.
			Williams, Emmett J.
			Williams, Herman J Jr.
			Williams, J T.
			Williams, John A.
			Williams, Johnny Paul.
			Williams, Joseph H.
			Williams, Kirk.
			Williams, Leopold A.
			Williams, Mark A.
			Williams, Mary Ann C.
			Williams, Melissa A.
			Williams, Nina.
			Williams, Oliver Kent.
			Williams, Parish.
			Williams, Roberto.
			Williams, Ronnie.
			Williams, Scott A.
			Williams, Steven.
			Williams, Thomas D.
			Williamson, Richard L Sr.
			Willyard, Derek C.
			Willyard, Donald R.
			Wilson, Alward.
			Wilson, Hosea.
			Wilson, Joe R.
			Wilson, Jonathan.
			Wilson, Katherine.
			Wiltz, Allen.
			Wing, Melvin.
			Wiseman, Allen.
			Wiseman, Clarence J Jr.
			Wiseman, Jean P.
			Wiseman, Joseph A.
			Wiseman, Michael T Jr.
			Wiseman, Michael T Sr.

Commerce case No.	Commission case No.	Product/country	Petitioners/supporters
			Wolfe, Charles.
			Woods, John T III.
			Wright, Curtis.
			Wright, Leonard.
			Wright, Randy D.
			Yeamans, Douglas.
			Yeamans, Neil.
			Yeamans, Ronnie.
			Yoeuth, Peon.
			Yopp, Harold.
			Yopp, Jonathon.
			Yopp, Milton Thomas.
			Young, James.
			Young, Taing.
			Young, Willie.
			Yow, Patricia D.
			Yow, Richard C.
			Zanca, Anthony V Sr.
			Zar, Ashley A.
			Zar, Carl J.
			Zar, John III.
			Zar, Steve.
			Zar, Steven.
			Zar, Troy A.
			Zerinque, John S Jr.
			Zirlott, Curtis.
			Zirlott, Jason D.
			Zirlott, Jeremy.
			Zirlott, Kimberly.
			Zirlott, Milton.
			Zirlott, Perry.
			Zirlott, Rosa H.
			Zito, Brian C.
			Zuvich, Michael A Jr.
			Ad Hoc Shrimp Trade Action Committee.
			Bryan Fishermens' Co-Op Inc.
			Louisiana Shrimp Association.
			South Carolina Shrimpers Association.
			Vietnamese-American Commerical Fisherman's Union.
			3–G Enterprize dba Griffin's Seafood.
			A & G Trawlers Inc.
			A & T Shrimping.
			A Ford Able Seafood.
			A J Horizon Inc.
			A&M Inc.
			A&R Shrimp Co.
			A&T Shrimping.
			AAH Inc.
			AC Christopher Sea Food Inc.
			Ace of Trade LLC.
			Adriana Corp.
			AJ Boats Inc.
			AJ Horizon Inc.
			AJ's Seafood.
			Alario Inc.
			Alcide J Adams Jr.
			Aldebaran Inc.
			Aldebran Inc.
			Alexander and Dola.
			Alfred Englade Inc.
			Alfred Trawlers Inc.
			Allen Hai Tran dba Kien Giang.
			Al's Shrimp Co.
			Al's Shrimp Co LLC.
			Al's Shrimp Co LLC.
			Al's Whosale & Retail.
			Alton Cheeks.
			Amada Inc.
			Amber Waves.
			Amelia Isle.
			American Beauty.

Commerce case No.	Commission case No.	Product/country	Petitioners/supporters
			American Beauty Inc.
			American Eagle Enterprise Inc.
			American Girl.
			American Seafood.
			Americana Shrimp.
			Amvina II.
			Amvina II.
			Amy D Inc.
			Amy's Seafood Mart.
			An Kit.
			Andy Boy.
			Andy's SFD.
			Angel Annie Inc.
			Angel Leigh.
			Angel Seafood Inc.
			Angela Marie Inc.
			Angela Marie Inc.
			Angelina Inc.
			Anna Grace LLC.
			Anna Grace LLC.
			Annie Thornton Inc.
			Annie Thornton Inc.
			Anthony Boy I.
			Anthony Boy I.
			Anthony Fillinich Sr.
			Apalachee Girl Inc.
			Aparicio Trawlers Inc dba Marcosa.
			Apple Jack Inc.
			Aquila Seafood Inc.
			Aquillard Seafood.
			Argo Marine.
			Arnold's Seafood.
			Arroya Cruz Inc.
			Art & Red Inc.
			Arthur Chisholm.
			A-Seafood Express.
			Ashley Deeb Inc.
			Ashley W 648675.
			Asian Gulf Corp.
			Atlantic.
			Atocha Troy A LeCompte Sr.
			Atwood Enterprises.
			B & B Boats Inc.
			B & B Seafood.
			B&J Seafood.
			BaBe Inc.
			Baby Ruth.
			Bailey, David B Sr—Bailey's Seafood.
			Bailey's Seafood of Cameron Inc.
			Bait Inc.
			Bait Inc.
			Baker Shrimp.
			Bama Love Inc.
			Bama Sea Products Inc.
			Bao Hung Inc.
			Bao Hung Inc.
			Bar Shrimp.
			Barbara Brooks Inc.
			Barbara Brooks Inc.
			Barisich Inc.
			Barisich Inc.
			Barnacle-Bill Inc.
			Barney's Bait & Seafood.
			Barrios Seafood.
			Bay Boy.
			Bay Islander Inc.
			Bay Sweeper Nets.
			Baye's Seafood 335654.
			Bayou Bounty Seafood LLC.
			Bayou Caddy Fisheries Inc.
			Bayou Carlin Fisheries.
			Bayou Carlin Fisheries Inc.
			Bayou Shrimp Processors Inc.
			BBC Trawlers Inc.

Commerce case No.	Commission case No.	Product/country	Petitioners/supporters
			BBS Inc.
			Beachcomber Inc.
			Beachcomber Inc.
			Bea's Corp.
			Beecher's Seafood.
			Believer Inc.
			Bennett's Seafood.
			Benny Alexie.
			Bergeron's Seafood.
			Bertileana Corp.
			Best Sea-Pack of Texas Inc.
			Beth Lomonte Inc.
			Beth Lomonte Inc.
			Betty B.
			Betty H Inc.
			Bety Inc.
			BF Millis & Sons Seafood.
			Big Daddy Seafood Inc.
			Big Grapes Inc.
			Big Kev.
			Big Oak Seafood.
			Big Oak Seafood.
			Big Oaks Seafood.
			Big Shrimp Inc.
			Billy J Foret—BJF Inc.
			Billy Sue Inc.
			Billy Sue Inc.
			Biloxi Freezing & Processing.
			Binh Duong.
			BJB LLC.
			Blain & Melissa Inc.
			Blanca Cruz Inc.
			Blanchard & Cheramie Inc.
			Blanchard Seafood.
			Blazing Sun Inc.
			Blazing Sun Inc.
			Blue Water Seafood.
			Bluewater Shrimp Co.
			Bluffton Oyster Co.
			Boat Josey Wales.
			Boat Josey Wales LLC.
			Boat Monica Kiff.
			Boat Warrior.
			Bob-Rey Fisheries Inc.
			Bodden Trawlers Inc.
			Bolillo Prieto Inc.
			Bon Secour Boats Inc.
			Bon Secour Fisheries Inc.
			Bon Secur Boats Inc.
			Bonnie Lass Inc.
			Boone Seafood.
			Bosarge Boats.
			Bosarge Boats.
			Bosarge Boats Inc.
			Bottom Verification LLC.
			Bowers Shrimp.
			Bowers Shrimp Farm.
			Bowers Valley Shrimp Inc.
			Brad Friloux.
			Brad Nicole Seafood.
			Bradley John Inc.
			Bradley's Seafood Mkt.
			Brava Cruz Inc.
			Brenda Darlene Inc.
			Brett Anthony.
			Bridgeside Marina.
			Bridgeside Seafood.
			Bridget's Seafood Service Inc.
			Bridget's Seafood Service Inc.
			BRS Seafood.
			BRS Seafood.
			Bruce W Johnson Inc.
			Bubba Daniels Inc.
			Bubba Tower Shrimp Co.

Commerce case No.	Commission case No.	Product/country	Petitioners/supporters
			Buccaneer Shrimp Co.
			Buchmer Inc.
			Buck & Peed Inc.
			Buddy Boy Inc.
			Buddy's Seafood.
			Bumble Bee Seafoods LLC.
			Bumble Bee Seafoods LLC.
			Bundy Seafood.
			Bundy's Seafood.
			Bunny's Shrimp.
			Burgbe Gump Seafood.
			Burnell Trawlers Inc.
			Burnell Trawlers Inc/Mamacita/Swamp Irish.
			Buster Brown Inc.
			By You Seafood.
			C & R Trawlers Inc.
			CA Magwood Enterprises Inc.
			Cajun Queen of LA LLC.
			Calcasien Point Bait N More Inc.
			Cam Ranh Bay.
			Camardelle's Seafood.
			Candy Inc.
			Cao Family Inc.
			Cap Robear.
			Cap'n Bozo Inc.
			Capn Jasper's Seafood Inc.
			Capt Aaron.
			Capt Adam.
			Capt Anthony Inc.
			Capt Bean (Richard A Ragas).
			Capt Beb Inc.
			Capt Bill Jr Inc.
			Capt Brother Inc.
			Capt Bubba.
			Capt Buck.
			Capt Carl.
			Capt Carlos Trawlers Inc.
			Capt Chance Inc.
			Capt Christopher Inc.
			Capt Chuckie.
			Capt Craig.
			Capt Craig Inc.
			Capt Crockett Inc.
			Capt Darren Hill Inc.
			Capt Dennis Inc.
			Capt Dickie Inc.
			Capt Dickie V Inc.
			Capt Doug.
			Capt Eddie Inc.
			Capt Edward Inc.
			Capt Eli's.
			Capt Elroy Inc.
			Capt Ernest LLC.
			Capt Ernest LLC.
			Capt GDA Inc.
			Capt George.
			Capt H & P Corp.
			Capt Havey Seafood.
			Capt Henry Seafood Dock.
			Capt Huy.
			Capt JDL Inc.
			Capt Jimmy Inc.
			Capt Joe.
			Capt Johnny II.
			Capt Jonathan.
			Capt Jonathan Inc.
			Capt Joshua Inc.
			Capt Jude 520556 13026.
			Capt Ken.
			Capt Kevin Inc.
			Capt Ko Inc.
			Capt Koung Lim.
			Capt Larry Seafood Market.
			Capt Larry's Inc.

Commerce case No.	Commission case No.	Product/country	Petitioners/supporters
			Capt LC Corp.
			Capt LD Seafood Inc.
			Capt Linton Inc.
			Capt Mack Inc.
			Capt Marcus Inc.
			Capt Morris.
			Capt Opie.
			Capt P Inc.
			Capt Pappie Inc.
			Capt Pat.
			Capt Paw Paw.
			Capt Pete Inc.
			Capt Peter Long Inc.
			Capt Pool Bear II's Seafood.
			Capt Quang.
			Capt Quina Inc.
			Capt Richard.
			Capt Ross Inc.
			Capt Roy.
			Capt Russell Jr Inc.
			Capt Ryan Inc.
			Capt Ryan's.
			Capt Sam.
			Capt Sang.
			Capt Scar Inc.
			Capt Scott.
			Capt Scott 5.
			Capt Scott Seafood.
			Capt Sparkers Shrimp.
			Capt St Peter.
			Capt T&T Corp.
			Capt Thien.
			Capt Tommy Inc.
			Capt Two Inc.
			Capt Van's Seafood.
			Capt Walley Inc.
			Capt Zoe Inc.
			Captain Allen's Bait & Tackle.
			Captain Arnulfo Inc.
			Captain Blair Seafood.
			Captain Dexter Inc.
			Captain D's.
			Captain Homer Inc.
			Captain Jeff.
			Captain JH III Inc.
			Captain Joshua.
			Captain Larry'O.
			Captain Miss Cammy Nhung.
			Captain Regis.
			Captain Rick.
			Captain T/Thiet Nguyen.
			Captain Tony.
			Captain Truong Phi Corp.
			Captain Vinh.
			Cap't-Brandon.
			Captian Thomas Trawler Inc.
			Carlino Seafood.
			Carly Sue Inc.
			Carmelita Inc.
			Carolina Lady Inc.
			Carolina Sea Foods Inc.
			Caroline and Calandra Inc.
			Carson & Co.
			Carson & Co Inc.
			Cary Encalade Trawling.
			Castellano's Corp.
			Cathy Cheramie Inc.
			CBS Seafood & Catering LLC.
			CBS Seafood & Catering LLC.
			Cecilia Enterprise Inc.
			CF Gollot & Son Sfd Inc.
			CF Gollott and Son Seafood Inc.
			Chackbay Lady.
			Chad & Chaz LLC.

Commerce case No.	Commission case No.	Product/country	Petitioners/supporters
			Challenger Shrimp Co Inc.
			Chalmette Marine Supply Co Inc.
			Chalmette Net & Trawl.
			Chapa Shrimp Trawlers.
			Chaplin Seafood.
			Charlee Girl.
			Charles Guidry Inc.
			Charles Sellers.
			Charles White.
			Charlotte Maier Inc.
			Charlotte Maier Inc.
			Chef Seafood Ent LLC.
			Cheramies Landing.
			Cherry Pt Seafood.
			Cheryl Lynn Inc.
			Chez Francois Seafood.
			Chilling Pride Inc.
			Chin Nguyen Co.
			Chin Nguyen Co.
			Chinatown Seafood Co Inc.
			Chines Cajun Net Shop.
			Chris Hansen Seafood.
			Christian G Inc.
			Christina Leigh Shrimp Co.
			Christina Leigh Shrimp Company Inc.
			Christina Leigh Shrimp Company Inc.
			Cieutat Trawlers.
			Cinco de Mayo Inc.
			Cindy Lynn Inc.
			Cindy Mae Inc.
			City Market Inc.
			CJ Seafood.
			CJs Seafood.
			Clifford Washington.
			Clinton Hayes—C&S Enterprises of Brandon Inc.
			Cochran's Boat Yard.
			Colorado River Seafood.
			Colson Marine.
			Comm Fishing.
			Commercial Fishing Service CFS Seafoods.
			Cong Son.
			Cong-An Inc.
			Country Girl Inc.
			Country Inc.
			Courtney & Ory Inc.
			Cowdrey Fish.
			Cptn David.
			Crab-Man Bait Shop.
			Craig A Wallis, Keith Wallis dba W&W Dock & 10 boats.
			Cristina Seafood.
			CRJ Inc.
			Cruillas Inc.
			Crusader Inc.
			Crustacean Frustration.
			Crystal Gayle Inc.
			Crystal Light Inc.
			Crystal Light Inc.
			Curtis Henderson.
			Custom Pack Inc.
			Custom Pack Inc.
			Cyril's Ice House & Supplies.
			D & A Seafood.
			D & C Seafood Inc.
			D & J Shrimping LLC.
			D & M Seafood & Rental LLC.
			D Ditcharo Jr Seafoods.
			D G & R C Inc.
			D S L & R Inc.
			D&T Marine Inc.
			Daddys Boys.
			DaHa Inc/Cat'Sass.
			DAHAPA Inc.

Commerce case No.	Commission case No.	Product/country	Petitioners/supporters
			Dale's Seafood Inc.
			Dang Nguyen.
			Daniel E Lane.
			Danny Boy Inc.
			Danny Max.
			David & Danny Inc.
			David C Donnelly.
			David Daniels.
			David Ellison Jr.
			David Gollott Sfd Inc.
			David W Casanova's Seafood.
			David White.
			David's Shrimping Co.
			Davis Seafood.
			Davis Seafood.
			Davis Seafood Inc.
			Dawn Marie.
			Deana Cheramie Inc.
			Deanna Lea.
			Dean's Seafood.
			Deau Nook.
			Debbe Anne Inc.
			Deep Sea Foods Inc/Jubilee Foods Inc.
			Delcambre Seafood.
			Dell Marine Inc.
			Dennis Menesses Seafood.
			Dennis' Seafood Inc.
			Dennis Shrimp Co Inc.
			Desperado.
			DFS Inc.
			Diamond Reef Seafood.
			Diem Inc.
			Dinh Nguyen.
			Dixie General Store LLC.
			Dixie Twister.
			Dominick's Seafood Inc.
			Don Paco Inc.
			Donald F Boone II.
			Dong Nguyen.
			Donini Seafoods Inc.
			Donna Marie.
			Donovan Tien I & II.
			Dopson Seafood.
			Dorada Cruz Inc.
			Double Do Inc.
			Double Do Inc.
			Doug and Neil Inc.
			Douglas Landing.
			Doxey's Oyster & Shrimp.
			Dragnet II.
			Dragnet Inc.
			Dragnet Seafood LLC.
			Dubberly's Mobile Seafood.
			Dudenhefer Seafood.
			Dugas Shrimp Co LLC.
			Dunamis Towing Inc.
			Dupree's Seafood.
			Duval & Duval Inc.
			Dwayne's Dream Inc.
			E & M Seafood.
			E & T Boating.
			E Gardner McClellan.
			E&E Shrimp Co Inc.
			East Coast Seafood.
			East Coast Seafood.
			East Coast Seafood.
			East Coast Seafood.
			Edisto Queen LLC.
			Edward Garcia Trawlers.
			EKV Inc.
			El Pedro Fishing & Trading Co Inc.
			Eliminator Inc.
			Elizabeth Nguyen.
			Ellerbee Seafoods.

Commerce case No.	Commission case No.	Product/country	Petitioners/supporters
			Ellie May.
			Elmira Pflueckhahn Inc.
			Elmira Pflueckhahn Inc.
			Elvira G Inc.
			Emily's SFD.
			Emmanuel Inc.
			Ensenada Cruz Inc.
			Enterprise.
			Enterprise Inc.
			Equalizer Shrimp Co Inc.
			Eric F Dufrene Jr LLC.
			Erica Lynn Inc.
			Erickson & Jensen Seafood Packers.
			Ethan G Inc.
			Excalibur LLC.
			F/V Apalachee Warrior.
			F/V Atlantis I.
			F/V Capt Walter B.
			F/V Captain Andy.
			F/V Eight Flags.
			F/V Mary Ann.
			F/V Miss Betty.
			F/V Morning Star.
			F/V Nam Linh.
			F/V Olivia B.
			F/V Phuoc Thanh Mai II.
			F/V Sea Dolphin.
			F/V Southern Grace.
			F/V Steven Mai.
			F/V Steven Mai II.
			Famer Boys Catfish Kitchens.
			Family Thing.
			Father Dan Inc.
			Father Lasimir Inc.
			Father Mike Inc.
			Fiesta Cruz Inc.
			Fine Shrimp Co.
			Fire Fox Inc.
			Fisherman's Reef Shrimp Co.
			Fishermen IX Inc.
			Fishing Vessel Enterprise Inc.
			Five Princesses Inc.
			FKM Inc.
			Fleet Products Inc.
			Flower Shrimp House.
			Flowers Seafood Co.
			Floyd's Wholesale Seafood Inc.
			Fly By Night Inc.
			Forest Billiot Jr.
			Fortune Shrimp Co Inc.
			FP Oubre.
			Francis Brothers Inc.
			Francis Brothers Inc.
			Francis III.
			Frank Toomer Jr.
			Fran-Tastic Too.
			Frederick-Dan.
			Freedom Fishing Inc.
			Freeman Seafood.
			Frelich Seafood Inc.
			Frenchie D–282226.
			Fripp Point Seafood.
			G & L Trawling Inc.
			G & O Shrimp Co Inc.
			G & O Trawlers Inc.
			G & S Trawlers Inc.
			G D Ventures II Inc.
			G G Seafood.
			G R LeBlanc Trawlers Inc.
			Gail's Bait Shop.
			Gale Force Inc.
			Gambler Inc.
			Gambler Inc.
			Garijak Inc.

Commerce case No.	Commission case No.	Product/country	Petitioners/supporters
			Gary F White.
			Gator's Seafood.
			Gay Fish Co.
			Gay Fish Co.
			GeeChee Fresh Seafood.
			Gemita Inc.
			Gene P Callahan Inc.
			George J Price Sr Ent Inc.
			Georgia Shrimp Co LLC.
			Gerica Marine.
			Gilden Enterprises.
			Gillikin Marine Railways Inc.
			Gina K Inc.
			Gisco Inc.
			Gisco Inc.
			Glenda Guidry Inc.
			Gloria Cruz Inc.
			Go Fish Inc.
			God's Gift.
			God's Gift Shrimp Vessel.
			Gogie.
			Gold Coast Seafood Inc.
			Golden Gulf Coast Pkg Co Inc.
			Golden Phase Inc.
			Golden Text Inc.
			Golden Text Inc.
			Golden Text Inc.
			Goldenstar.
			Gollott Brothers Sfd Co Inc.
			Gollott's Oil Dock & Ice House Inc.
			Gonzalez Trawlers Inc.
			Gore Enterprises Inc.
			Gore Enterprizes Inc.
			Gore Seafood Co.
			Gore Seafood Inc.
			Gove Lopez.
			Graham Fisheries Inc.
			Graham Shrimp Co Inc.
			Graham Shrimp Co Inc.
			Gramps Shrimp Co.
			Grandma Inc.
			Grandpa's Dream.
			Grandpa's Dream.
			Granny's Garden and Seafood.
			Green Flash LLC.
			Greg Inc.
			Gregory Mark Gaubert.
			Gregory Mark Gaubert.
			Gregory T Boone.
			Gros Tete Trucking Inc.
			Guidry's Bait Shop.
			Guidry's Net Shop.
			Gulf Central Seaood Inc.
			Gulf Crown Seafood Co Inc.
			Gulf Fish Inc.
			Gulf Fisheries Inc.
			Gulf Island Shrimp & Seafood II LLC.
			Gulf King Services Inc.
			Gulf Pride Enterprises Inc.
			Gulf Seaway Seafood Inc.
			Gulf Shrimp.
			Gulf South Inc.
			Gulf Stream Marina LLC.
			Gulf Sweeper Inc (Trawler Gulf Sweeper).
			Gypsy Girl Inc.
			H & L Seafood.
			Hack Berry Seafood.
			Hagen & Miley Inc.
			Hailey Marie Inc.
			Hanh Lai Inc.
			Hannah Joyce Inc.
			Hardy Trawlers.
			Hardy Trawlers.
			Harrington Fish Co Inc.

Commerce case No.	Commission case No.	Product/country	Petitioners/supporters
			Harrington Seafood & Supply Inc.
			Harrington Shrimp Co Inc.
			Harrington Trawlers Inc.
			Harris Fisheries Inc.
			Hazel's Hustler.
			HCP LLC.
			Heather Lynn Inc.
			Heavy Metal Inc.
			Hebert Investments Inc.
			Hebert's Mini Mart LLC.
			Helen E Inc.
			Helen Kay Inc.
			Helen Kay Inc.
			Helen W Smith Inc.
			Henderson Seafood.
			Henry Daniels Inc.
			Hermosa Cruz Inc.
			Hi Seas of Dulac Inc.
			Hien Le Van Inc.
			High Hope Inc.
			Hoang Anh.
			Hoang Long I, II.
			Holland Enterprises.
			Holly Beach Seafood.
			Holly Marie's Seafood Market.
			Hombre Inc.
			Home Loving Care Co.
			Hondumex Ent Inc.
			Hong Nga Inc.
			Hongri Inc.
			Houston Foret Seafood.
			Howerin Trawlers Inc.
			HTH Marine Inc.
			Hubbard Seafood.
			Hurricane Emily Seafood Inc.
			Hutcherson Christian Shrimp Inc.
			Huyen Inc.
			Icy Seafood II Inc.
			ICY Seafood Inc.
			Icy Seafood Inc.
			Ida's Seafood Rest & Market.
			Ike & Zack Inc.
			Independent Fish Company Inc.
			Inflation Inc.
			Integrity Fisheries Inc.
			Integrity Fishing Inc.
			International Oceanic Ent.
			Interstate Vo LLC.
			Intracoastal Seafood Inc.
			Iorn Will Inc.
			Irma Trawlers Inc.
			Iron Horse Inc.
			Isabel Maier Inc.
			Isabel Maier Inc.
			Isla Cruz Inc.
			J & J Rentals Inc.
			J & J Trawler's Inc.
			J & R Seafood.
			J Collins Trawlers.
			J D Land Co.
			Jackie & Hiep Trieu.
			Jacob A Inc.
			Jacquelin Marie Inc.
			Jacquelin Marie Inc.
			James D Quach Inc.
			James E Scott III.
			James F Dubberly.
			James Gadson.
			James J Matherne Jr.
			James J Matherne Sr.
			James Kenneth Lewis Sr.
			James LaRive Jr.
			James W Green Jr dba Miss Emilie Ann.
			James W Hicks.

Commerce case No.	Commission case No.	Product/country	Petitioners/supporters
			Janet Louise Inc.
			Jani Marie.
			JAS Inc.
			JBS Packing Co Inc.
			JBS Packing Inc.
			JCM.
			Jean's Bait.
			Jeff Chancey.
			Jemison Trawler's Inc.
			Jenna Dawn LLC.
			Jennifer Nguyen—Capt T.
			Jensen Seafood Pkg Co Inc.
			Jesse LeCompte Jr.
			Jesse LeCompte Sr.
			Jesse Shantelle Inc.
			Jessica Ann Inc.
			Jessica Inc.
			Jesus G Inc.
			Jimmy and Valerie Bonvillain.
			Jimmy Le Inc.
			Jim's Cajen Shrimp.
			Joan of Arc Inc.
			JoAnn and Michael W Daigle.
			Jody Martin.
			Joe Quach.
			Joel's Wild Oak Bait Shop & Fresh Seafood.
			John A Norris.
			John J Alexie.
			John Michael E Inc.
			John V Alexie.
			Johnny & Joyce's Seafood.
			Johnny O Co.
			Johnny's Seafood.
			John's Seafood.
			Joker's Wild.
			Jones—Kain Inc.
			Joni John Inc (Leon J Champagne).
			Jon's C Seafood Inc.
			Joseph Anthony.
			Joseph Anthony Inc.
			Joseph Garcia.
			Joseph Martino.
			Joseph Martino Corp.
			Joseph T Vermeulen.
			Josh & Jake Inc.
			Joya Cruz Inc.
			JP Fisheries.
			Julie Ann LLC.
			Julie Hoang.
			Julie Shrimp Co Inc (Trawler Julie).
			Julio Gonzalez Boat Builders Inc.
			Justin Dang.
			JW Enterprise.
			K & J Trawlers.
			K&D Boat Company.
			K&S Enterprises Inc.
			Kalliainen Seafoods Inc.
			KAM Fishing.
			Kandi Sue Inc.
			Karl M Belsome LLC.
			KBL Corp.
			KDH Inc.
			Keith M Swindell.
			Kellum's Seafood.
			Kellum's Seafood.
			Kelly Marie Inc.
			Ken Lee's Dock LLC.
			Kenneth Guidry.
			Kenny-Nancy Inc.
			Kentucky Fisheries Inc.
			Kentucky Trawlers Inc.
			Kevin & Bryan (M/V).
			Kevin Dang.
			Khang Dang.

Commerce case No.	Commission case No.	Product/country	Petitioners/supporters
			Khanh Huu Vu.
			Kheng Sok Shrimping.
			Kim & James Inc.
			Kim Hai II Inc.
			Kim Hai Inc.
			Kim's Seafood.
			Kingdom World Inc.
			Kirby Seafood.
			Klein Express.
			KMB Inc.
			Knight's Seafood Inc.
			Knight's Seafood Inc.
			Knowles Noel Camardelle.
			Kramer's Bait Co.
			Kris & Cody Inc.
			KTC Fishery LLC.
			L & M.
			L & N Friendship Corp.
			L & O Trawlers Inc.
			L & T Inc.
			L&M.
			LA—3184 CA.
			La Belle Idee.
			La Macarela Inc.
			La Pachita Inc.
			LA–6327–CA.
			LaBauve Inc.
			LaBauve Inc.
			Lade Melissa Inc.
			Lady Agnes II.
			Lady Agnes III.
			Lady Amelia Inc.
			Lady Anna I.
			Lady Anna II.
			Lady Barbara Inc.
			Lady Carolyn Inc.
			Lady Catherine.
			Lady Chancery Inc.
			Lady Chelsea Inc.
			Lady Danielle.
			Lady Debra Inc.
			Lady Dolcina Inc.
			Lady Gail Inc.
			Lady Katherine Inc.
			Lady Kelly Inc.
			Lady Kelly Inc.
			Lady Kristie.
			Lady Lavang LLC.
			Lady Liberty Seafood Co.
			Lady Lynn Ltd.
			Lady Marie Inc.
			Lady Melissa Inc.
			Lady Shelly.
			Lady Shelly.
			Lady Snow Inc.
			Lady Stephanie.
			Lady Susie Inc.
			Lady T Kim Inc.
			Lady TheLna.
			Lady Toni Inc.
			Lady Veronica.
			Lafitte Frozen Foods Corp.
			Lafont Inc.
			Lafourche Clipper Inc.
			Lafourche Clipper Inc.
			Lamarah Sue Inc.
			Lan Chi Inc.
			Lan Chi Inc.
			Lancero Inc.
			Lanny Renard and Daniel Bourque.
			Lapeyrouse Seafood Bar Groc Inc.
			Larry G Kellum Sr.
			Larry Scott Freeman.
			Larry W Hicks.

Commerce case No.	Commission case No.	Product/country	Petitioners/supporters
			Lasseigne & Sons Inc.
			Laura Lee.
			Lauren O.
			Lawrence Jacobs Sfd.
			Lazaretta Packing Inc.
			Le & Le Inc.
			Le Family Inc.
			Le Family Inc.
			Le Tra Inc.
			Leek & Millington Trawler Privateeer.
			Lee's Sales & Distribution.
			Leonard Shrimp Producers Inc.
			Leoncea B Regnier.
			Lerin Lane.
			Li Johnson.
			Liar Liar.
			Libertad Fisheries Inc.
			Liberty I.
			Lighthouse Fisheries Inc.
			Lil Aly.
			Lil Arthur Inc.
			Lil BJ LLC.
			Lil Robbie Inc.
			Lil Robbie Inc.
			Lil Robin.
			Lil Robin.
			Lilla.
			Lincoln.
			Linda & Tot Inc.
			Linda Cruz Inc.
			Linda Hoang Shrimp.
			Linda Lou Boat Corp.
			Linda Lou Boat Corp.
			Lisa Lynn Inc.
			Lisa Lynn Inc.
			Little Andrew Inc.
			Little Andy Inc.
			Little Arthur.
			Little David Gulf Trawler Inc.
			Little Ernie Gulf Trawler Inc.
			Little Ken Inc.
			Little Mark.
			Little William Inc.
			Little World.
			LJL Inc.
			Long Viet Nguyen.
			Longwater Seafood dba Ryan H Longwater.
			Louisiana Gulf Shrimp LLC.
			Louisiana Lady Inc.
			Louisiana Man.
			Louisiana Newpack Shrimp Co Inc.
			Louisiana Pride Seafood Inc.
			Louisiana Pride Seafood Inc.
			Louisiana Seafood Dist LLC.
			Louisiana Shrimp & Packing Inc.
			Louisiana Shrimp and Packing Co Inc.
			Lovely Daddy II & III.
			Lovely Jennie.
			Low Country Lady (Randolph N Rhodes).
			Low County Lady.
			Luchador Inc.
			Lucky.
			Lucky I.
			Lucky Jack Inc.
			Lucky Lady.
			Lucky Lady II.
			Lucky Leven Inc.
			Lucky MV.
			Lucky Ocean.
			Lucky Sea Star Inc.
			Lucky Star.
			Lucky World.
			Lucky's Seafood Market & Poboys LLC.
			Luco Drew's.

Commerce case No.	Commission case No.	Product/country	Petitioners/supporters
			Luisa Inc.
			Lupe Martinez Inc.
			LV Marine Inc.
			LW Graham Inc.
			Lyle LeCompte.
			Lynda Riley Inc.
			Lynda Riley Inc.
			M & M Seafood.
			M V Sherry D.
			M V Tony Inc.
			M&C Fisheries.
			M/V Baby Doll.
			M/V Chevo's Bitch.
			M/V Lil Vicki.
			M/V Loco-N Motion.
			M/V Patsy K #556871.
			M/V X L.
			Mabry Allen Miller Jr.
			Mad Max Seafood.
			Madera Cruz Inc.
			Madison Seafood.
			Madlin Shrimp Co Inc.
			Malibu.
			Malolo LLC.
			Mamacita Inc.
			Man Van Nguyen.
			Manteo Shrimp Co.
			Marco Corp.
			Marcos A.
			Maria Elena Inc.
			Maria Sandi.
			Mariachi Trawlers Inc.
			Mariah Jade Shrimp Company.
			Marie Teresa Inc.
			Marine Fisheries.
			Marisa Elida Inc.
			Mark and Jace.
			Marleann.
			Martin's Fresh Shrimp.
			Mary Bea Inc.
			Master Brandon Inc.
			Master Brock.
			Master Brock.
			Master Dylan.
			Master Gerald Trawlers Inc.
			Master Hai.
			Master Hai II.
			Master Henry.
			Master Jared Inc.
			Master Jhy Inc.
			Master John Inc.
			Master Justin Inc.
			Master Justin Inc.
			Master Ken Inc.
			Master Kevin Inc.
			Master Martin Inc.
			Master Mike Inc.
			Master NT Inc.
			Master Pee-Wee.
			Master Ronald Inc.
			Master Scott.
			Master Scott II.
			Master Seelos Inc.
			Master T.
			Master Tai LLC.
			Master Tai LLC.
			Mat Roland Seafood Co.
			Maw Doo.
			Mayflower.
			McQuaig Shrimp Co Inc.
			Me Kong.
			Melerine Seafood.
			Melody Shrimp Co.
			Mer Shrimp Inc.

Commerce case No.	Commission case No.	Product/country	Petitioners/supporters
			Michael Lynn.
			Michael Nguyen.
			Michael Saturday's Fresh Every Day South Carolina Shrimp.
			Mickey Nelson Net Shop.
			Mickey's Net.
			Midnight Prowler.
			Mike's Seafood Inc.
			Miley's Seafood Inc.
			Militello and Son Inc.
			Miller & Son Seafood Inc.
			Miller Fishing.
			Milliken & Son's.
			Milton J Dufrene and Son Inc.
			Milton Yopp—Capt'n Nathan & Thomas Winfield.
			Minh & Liem Doan.
			Mis Quynh Chi II.
			Miss Adrianna Inc.
			Miss Alice Inc.
			Miss Ann Inc.
			Miss Ann Inc.
			Miss Ashleigh.
			Miss Ashleigh Inc.
			Miss Barbara.
			Miss Barbara Inc.
			Miss Bernadette A Inc.
			Miss Bertha (M/V).
			Miss Beverly Kay.
			Miss Brenda.
			Miss Candace.
			Miss Candace Nicole Inc.
			Miss Carla Jean Inc.
			Miss Caroline Inc.
			Miss Carolyn Louise Inc.
			Miss Caylee.
			Miss Charlotte Inc.
			Miss Christine III.
			Miss Cleda Jo Inc.
			Miss Courtney Inc.
			Miss Courtney Inc.
			Miss Cynthia.
			Miss Danielle Gulf Trawler Inc.
			Miss Danielle LLC.
			Miss Dawn.
			Miss Ellie Inc.
			Miss Faye LLC.
			Miss Fina Inc.
			Miss Georgia Inc.
			Miss Hannah.
			Miss Hannah Inc.
			Miss Hazel Inc.
			Miss Hilary Inc.
			Miss Jennifer Inc.
			Miss Joanna Inc.
			Miss Julia.
			Miss Kandy Tran LLC.
			Miss Kandy Tran LLC.
			Miss Karen.
			Miss Kathi Inc.
			Miss Kathy.
			Miss Kaylyn LLC.
			Miss Khayla.
			Miss Lil.
			Miss Lillie Inc.
			Miss Liz Inc.
			Miss Loraine.
			Miss Loraine Inc.
			Miss Lori Dawn IV Inc.
			Miss Lori Dawn V Inc.
			Miss Lori Dawn VI Inc.
			Miss Lori Dawn VII Inc.
			Miss Lorie Inc.
			Miss Luana D Shrimp Co.

Commerce case No.	Commission case No.	Product/country	Petitioners/supporters
			Miss Luana D Shrimp Co.
			Miss Madeline Inc.
			Miss Madison.
			Miss Marie.
			Miss Marie Inc.
			Miss Marilyn Louis Inc.
			Miss Marilyn Louise.
			Miss Marilyn Louise Inc.
			Miss Marissa Inc.
			Miss Martha Inc.
			Miss Martha Inc.
			Miss Mary T.
			Miss Myle.
			Miss Narla.
			Miss Nicole.
			Miss Nicole Inc.
			Miss Plum Inc.
			Miss Quynh Anh I.
			Miss Quynh Anh I LLC.
			Miss Quynh Anh II LLC.
			Miss Redemption LLC.
			Miss Rhianna Inc.
			Miss Sambath.
			Miss Sandra II.
			Miss Sara Ann.
			Miss Savannah.
			Miss Savannah II.
			Miss Soriya.
			Miss Suzanne.
			Miss Sylvia.
			Miss Than.
			Miss Thom.
			Miss Thom Inc.
			Miss Tina Inc.
			Miss Trinh Trinh.
			Miss Trisha Inc.
			Miss Trisha Inc.
			Miss Verna Inc.
			Miss Vicki.
			Miss Victoria Inc.
			Miss Vivian Inc.
			Miss WillaDean.
			Miss Winnie Inc.
			Miss Yvette Inc.
			Miss Yvonne.
			Misty Morn Eat.
			Misty Star.
			MJM Seafood Inc.
			M'M Shrimp Co Inc.
			Mom & Dad Inc.
			Mona-Dianne Seafood.
			Montha Sok and Tan No Le.
			Moon River Inc.
			Moon Tillett Fish Co Inc.
			Moonlight.
			Moonlight Mfg.
			Moore Trawlers Inc.
			Morgan Creek Seafood.
			Morgan Rae Inc.
			Morning Star.
			Morrison Seafood.
			Mother Cabrini.
			Mother Teresa Inc.
			Mr & Mrs Inc.
			Mr & Mrs Inc.
			Mr Coolly.
			Mr Fox.
			Mr Fox.
			Mr G.
			Mr Gaget LLC.
			Mr Henry.
			Mr Natural Inc.
			Mr Neil.
			Mr Phil T Inc.

Commerce case No.	Commission case No.	Product/country	Petitioners/supporters
			Mr Sea Inc.
			Mr Verdin Inc.
			Mr Williams.
			Mrs Judy Too.
			Mrs Tina Lan Inc.
			Ms Alva Inc.
			Ms An.
			My Angel II.
			My Blues.
			My Dad Whitney Inc.
			My Girls LLC.
			My Thi Tran Inc.
			My Three Sons Inc.
			My V Le Inc.
			My-Le Thi Nguyen.
			Myron A Smith Inc.
			Nancy Joy.
			Nancy Joy Inc.
			Nancy Joy Inc.
			Nanny Granny Inc.
			Nanny Kat Seafood LLC.
			Napolean Seafoods.
			Napoleon II.
			Napoleon Seafood.
			Napoleon SF.
			Naquin's Seafood.
			Nautilus LLC.
			Nelma Y Lane.
			Nelson and Son.
			Nelson Trawlers Inc.
			Nelson's Quality Shrimp Company.
			Nevgulmarco Co Inc.
			New Deal Comm Fishing.
			New Way Inc.
			Nguyen Day Van.
			Nguyen Express.
			Nguyen Int'l Enterprises Inc.
			Nguyen Shipping Inc.
			NHU UYEN.
			Night Moves of Cut Off Inc.
			Night Shift LLC.
			Night Star.
			North Point Trawlers Inc.
			North Point Trawlers Inc.
			Nuestra Cruz Inc.
			Nunez Seafood.
			Oasis.
			Ocean Bird Inc.
			Ocean Breeze Inc.
			Ocean Breeze Inc.
			Ocean City Corp.
			Ocean Emperor Inc.
			Ocean Harvest Wholesale Inc.
			Ocean Pride Seafood Inc.
			Ocean Seafood.
			Ocean Select Seafood LLC.
			Ocean Springs Seafood Market Inc.
			Ocean Wind Inc.
			Oceanica Cruz Inc.
			Odin LLC.
			Old Maw Inc.
			Ole Holbrook's Fresh Fish Market LLC.
			Ole Nelle.
			One Stop Bait & Ice.
			Open Sea Inc.
			Orage Enterprises Inc.
			Orn Roeum Shrimping.
			Otis Cantrelle Jr.
			Otis M Lee Jr.
			Owens Shrimping.
			Palmetto Seafood Inc.
			Papa Rod Inc.
			Papa T.
			Pappy Inc.

Commerce case No.	Commission case No.	Product/country	Petitioners/supporters
			Pappy's Gold.
			Parfait Enterprises Inc.
			Paris/Asia.
			Parramore Inc.
			Parrish Shrimping Inc.
			Pascagoula Ice & Freezer Co Inc.
			Pat-Lin Enterprises Inc.
			Patricia Foret.
			Patrick Sutton Inc.
			Patty Trish Inc.
			Paul Piazza and Son Inc.
			Paw Paw Allen.
			Paw Paw Pride Inc.
			Pearl Inc dba Indian Ridge Shrimp Co.
			Pei Gratia Inc.
			Pelican Point Seafood Inc.
			Penny V LLC.
			Perlita Inc.
			Perseverance I LLC.
			Pete & Queenie Inc.
			Phat Le and Le Tran.
			Phi Long Inc.
			Phi-Ho LLC.
			Pip's Place Marina Inc.
			Plaisance Trawlers Inc.
			Plata Cruz Inc.
			Poc-Tal Trawlers Inc.
			Pointe-Aux-Chene Marina.
			Pontchautrain Blue Crab.
			Pony Express.
			Poppee.
			Poppy's Pride Seafood.
			Port Bolivar Fisheries Inc.
			Port Marine Supplies.
			Port Royal Seafood Inc.
			Poteet Seafood Co Inc.
			Potter Boats Inc.
			Price Seafood Inc.
			Prince of Tides.
			Princess Ashley Inc.
			Princess Celine Inc.
			Princess Cindy Inc.
			Princess Lorie LLC.
			Princess Mary Inc.
			Prosperity.
			PT Fisheries Inc.
			Punch's Seafood Mkt.
			Purata Trawlers Inc.
			Pursuer Inc.
			Quality Seafood.
			Quang Minh II Inc.
			Queen Lily Inc.
			Queen Mary.
			Queen Mary Inc.
			Quinta Cruz Inc.
			Quoc Bao Inc.
			Quynh NHU Inc.
			Quynh Nhu Inc.
			R & J Inc.
			R & K Fisheries LLC.
			R & L Shrimp Inc.
			R & P Fisheries.
			R & R Bait/Seafood.
			R & S Shrimping.
			R & T Atocha LLC.
			R&D Seafood.
			R&K Fisheries LLC.
			R&R Seafood.
			RA Lesso Brokerage Co Inc.
			RA Lesso Seafood Co Inc.
			Rachel-Jade.
			Ralph Lee Thomas Jr.
			Ralph W Jones.
			Ramblin Man Inc.

Commerce case No.	Commission case No.	Product/country	Petitioners/supporters
			Ranchero Trawlers Inc.
			Randall J Pinell Inc.
			Randall J Pinell Inc.
			Randall K and Melissa B Richard.
			Randall Pinell.
			Randy Boy Inc.
			Randy Boy Inc.
			Rang Dong.
			Raul L Castellanos.
			Raul's Seafood.
			Raul's Seafood.
			Rayda Cheramie Inc.
			Raymond LeBouef.
			RCP Seafood I II III.
			RDR Shrimp Inc.
			Reagan's Seafood.
			Rebecca Shrimp Co Inc.
			Rebel Seafood.
			Regulus.
			Rejimi Inc.
			Reno's Sea Food.
			Res Vessel.
			Reyes Trawlers Inc.
			Rick's Seafood Inc.
			Ricky B LLC.
			Ricky G Inc.
			Riffle Seafood.
			Rigolets Bait & Seafood LLC.
			Riverside Bait & Tackle.
			RJ's.
			Roatex Ent Inc.
			Robanie C Inc.
			Robanie C Inc.
			Robanie C Inc.
			Robert E Landry.
			Robert H Schrimpf.
			Robert Johnson.
			Robert Keenan Seafood.
			Robert Upton or Terry Upton.
			Robert White Seafood.
			Rockin Robbin Fishing Boat Inc.
			Rodney Hereford Jr.
			Rodney Hereford Sr.
			Rodney Hereford Sr.
			Roger Blanchard Inc.
			Rolling On Inc.
			Romo Inc.
			Ronald Louis Anderson Jr.
			Rosa Marie Inc.
			Rose Island Seafood.
			RPM Enterprises LLC.
			Rubi Cruz Inc.
			Ruf-N-Redy Inc.
			Rutley Boys Inc.
			Sadie D Seafood.
			Safe Harbour Seafood Inc.
			Salina Cruz Inc.
			Sally Kim III.
			Sally Kim IV.
			Sam Snodgrass & Co.
			Samaira Inc.
			San Dia.
			Sand Dollar Inc.
			Sandy N.
			Sandy O Inc.
			Santa Fe Cruz Inc.
			Santa Maria I Inc.
			Santa Maria II.
			Santa Monica Inc.
			Scavanger.
			Scooby Inc.
			Scooby Inc.
			Scottie and Juliette Dufrene.
			Scottie and Juliette Dufrene.

Commerce case No.	Commission case No.	Product/country	Petitioners/supporters
			Sea Angel.
			Sea Angel Inc.
			Sea Bastion Inc.
			Sea Drifter Inc.
			Sea Durbin Inc.
			Sea Eagle.
			Sea Eagle Fisheries Inc.
			Sea Frontier Inc.
			Sea Gold Inc.
			Sea Gulf Fisheries Inc.
			Sea Gypsy Inc.
			Sea Hawk I Inc.
			Sea Horse Fisheries.
			Sea Horse Fisheries Inc.
			Sea King Inc.
			Sea Pearl Seafood Company Inc.
			Sea Queen IV.
			Sea Trawlers Inc.
			Sea World.
			Seabrook Seafood Inc.
			Seabrook Seafood Inc.
			Seafood & Us Inc.
			Seaman's Magic Inc.
			Seaman's Magic Inc.
			Seaside Seafood Inc.
			Seaweed 2000.
			Seawolf Seafood.
			Second Generation Seafood.
			Shark Co Seafood Inter Inc.
			Sharon—Ali Michelle Inc.
			Shelby & Barbara Seafood.
			Shelby & Barbara Seafood.
			Shelia Marie LLC.
			Shell Creek Seafood Inc.
			Shirley Elaine.
			Shirley Girl LLC.
			Shrimp Boat Patrice.
			Shrimp Boating Inc.
			Shrimp Express.
			Shrimp Man.
			Shrimp Networks Inc.
			Shrimp Trawler.
			Shrimper.
			Shrimper.
			Shrimpy's.
			Si Ky Lan Inc.
			Si Ky Lan Inc.
			Si Ky Lan Inc.
			Sidney Fisheries Inc.
			Silver Fox.
			Silver Fox LLC.
			Simon.
			Sims Shrimping.
			Skip Toomer Inc.
			Skip Toomer Inc.
			Skyla Marie Inc.
			Smith & Sons Seafood Inc.
			Snowdrift.
			Snowdrift.
			Sochenda.
			Soeung Phat.
			Son T Le Inc.
			Son's Pride Inc.
			Sophie Marie Inc.
			Soul Mama Inc.
			Souther Obsession Inc.
			Southern Lady.
			Southern Nightmare Inc.
			Southern Star.
			Southshore Seafood.
			Spencers Seafood.
			Sprig Co Inc.
			St Anthony Inc.
			St Daniel Phillip Inc.

Commerce case No.	Commission case No.	Product/country	Petitioners/supporters
			St Dominic.
			St Joseph.
			St Joseph.
			St Joseph II Inc.
			St Joseph III Inc.
			St Joseph IV Inc.
			St Martin.
			St Martyrs VN.
			St Mary Seafood.
			St Mary Seven.
			St Mary Tai.
			St Michael Fuel & Ice Inc.
			St Michael's Ice & Fuel.
			St Peter.
			St Peter 550775.
			St Teresa Inc.
			St Vincent Andrew Inc.
			St Vincent Gulf Shrimp Inc.
			St Vincent One B.
			St Vincent One B Inc.
			St Vincent SF.
			St Vincent Sfd Inc.
			Start Young Inc.
			Steamboat Bills Seafood.
			Stella Mestre Inc.
			Stephen Dantin Jr.
			Stephney's Seafood.
			Stipelcovich Marine Wks.
			Stone-Co Farms LP.
			Stone-Co Farms LP.
			Stormy Sean Inc.
			Stormy Seas Inc.
			Sun Star Inc.
			Sun Swift Inc.
			Sunshine.
			Super Coon Inc.
			Super Cooper Inc.
			Swamp Irish Inc.
			Sylvan P Racine Jr—Capt Romain.
			T & T Seafood.
			T Brothers.
			T Cvitanovich Seafood LLC.
			Ta Do.
			Ta T Vo Inc.
			Ta T Vo Inc.
			Tana Inc.
			Tanya Lea Inc.
			Tanya Lea Inc.
			Tanya Lea Inc.
			Tasha Lou.
			T-Brown Inc.
			Tee Frank Inc.
			Tee Tigre Inc.
			Tercera Cruz Inc.
			Terrebonne Seafood Inc.
			Terri Monica.
			Terry Luke Corp.
			Terry Luke Corp.
			Terry Luke Corp.
			Terry Lynn Inc.
			Te-Sam Inc.
			Texas 1 Inc.
			Texas 18 Inc.
			Texas Lady Inc.
			Texas Pack Inc.
			Tex-Mex Cold Storage Inc.
			Tex-Mex Cold Storage Inc.
			Thai & Tran Inc.
			Thai Bao Inc.
			Thanh Phong.
			The Boat Phat Tai.
			The Fishermans Dock.
			The Last One.
			The Light House Bait & Seafood Shack LLC.

Commerce case No.	Commission case No.	Product/country	Petitioners/supporters
			The Mayporter Inc.
			The NGO.
			The Seafood Shed.
			Thelma J Inc.
			Theresa Seafood Inc.
			Third Tower Inc.
			Thomas Winfield—Capt Nathan.
			Thompson Bros.
			Three C's.
			Three Dads.
			Three Sons.
			Three Sons Inc.
			Three Sons Inc.
			Thunder Roll.
			Thunderbolt Fisherman's Seafood Inc.
			Thy Tra Inc.
			Thy Tra Inc.
			Tidelands Seafood Co Inc.
			Tiffani Claire Inc.
			Tiffani Claire Inc.
			Tiger Seafood.
			Tikede Inc.
			Timmy Boy Corp.
			Tina Chow.
			Tina T LLC.
			Tino Mones Seafood.
			TJ's Seafood.
			Toan Inc.
			Todd Co.
			Todd's Fisheries.
			Tom LE LLC.
			Tom Le LLC.
			Tom N & Bill N Inc.
			Tommy Bui dba Mana II.
			Tommy Cheramie Inc.
			Tommy Gulf Sea Food Inc.
			Tommy's Seafood Inc.
			Tonya Jane Inc.
			Tony-N.
			Tookie Inc.
			Tot & Linda Inc.
			T-Pops Inc.
			Tran Phu Van.
			Tran's Express Inc.
			Travis—Shawn.
			Travis—Shawn.
			Trawler Azteca.
			Trawler Becky Lyn Inc.
			Trawler Capt GC.
			Trawler Capt GC II.
			Trawler Dalia.
			Trawler Doctor Bill.
			Trawler Gulf Runner.
			Trawler HT Seaman.
			Trawler Joyce.
			Trawler Kristi Nicole.
			Trawler Kyle & Courtney.
			Trawler Lady Catherine.
			Trawler Lady Gwen Doe.
			Trawler Linda B Inc.
			Trawler Linda June.
			Trawler Little Brothers.
			Trawler Little Gavino.
			Trawler Little Rookie Inc.
			Trawler Mary Bea.
			Trawler Master Alston.
			Trawler Master Jeffery Inc.
			Trawler Michael Anthony Inc.
			Trawler Mildred Barr.
			Trawler Miss Alice Inc.
			Trawler Miss Jamie.
			Trawler Miss Kelsey.
			Trawler Miss Sylvia Inc.
			Trawler Mrs Viola.

Commerce case No.	Commission case No.	Product/country	Petitioners/supporters
			Trawler Nichols Dream.
			Trawler Raindear Partnership.
			Trawler Rhonda Kathleen.
			Trawler Rhonda Lynn.
			Trawler Sandra Kay.
			Trawler Sarah Jane.
			Trawler Sea Wolf.
			Trawler Sea Wolf.
			Trawler SS Chaplin.
			Trawler The Mexican.
			Trawler Wallace B.
			Trawler Wylie Milam.
			Triple C Seafood.
			Triple T Enterprises Inc.
			Triplets Production.
			Tropical SFD.
			Troy A LeCompte Sr.
			True World Foods Inc.
			T's Seafood.
			Tu Viet Vu.
			TVN Marine Inc.
			TVN Marine Inc.
			Two Flags Inc.
			Tyler James.
			Ultima Cruz Inc.
			UTK Enterprises Inc.
			V & B Shrimping LLC.
			Valona Sea Food.
			Valona Seafood Inc.
			Van Burren Shrimp Co.
			Vaquero Inc.
			Varon Inc.
			Venetian Isles Marina.
			Venice Seafood Exchange Inc.
			Venice Seafood LLC.
			Vera Cruz Inc.
			Veronica Inc.
			Versaggi Shrimp Corp.
			Victoria Rose Inc.
			Viet Giang Corp.
			Vigilante Trawlers Inc.
			Village Creek Seafood.
			Villers Seafood Co Inc.
			Vina Enterprises Inc.
			Vincent L Alexie Jr.
			Vincent Piazza Jr & Sons Seafood Inc.
			Vin-Penny.
			Vivian Lee Inc.
			Von Harten Shrimp Co Inc.
			VT & L Inc.
			Vu NGO.
			Vu-Nguyen Partners.
			W L & O Inc.
			Waccamaw Producers.
			Wait-N-Sea Inc.
			Waller Boat Corp.
			Walter R Hicks.
			Ward Seafood Inc.
			Washington Seafood.
			Watermen Industries Inc.
			Watermen Industries Inc.
			Waymaker Inc.
			Wayne Estay Shrimp Co Inc.
			WC Trawlers Inc.
			We Three Inc.
			We Three Inc.
			Webster's Inc.
			Weems Bros.
			Weems Bros.
			Weems Bros.
			Weems Bros.
			Weems Bros.
			Weems Bros.
			Weems Bros.

Commerce case No.	Commission case No.	Product/country	Petitioners/supporters
			Weems Bros.
			Weems Bros.
			Weems Bros.
			Weems Bros.
			Weems Bros.
			Weems Bros.
			Weems Bros.
			Weems Bros Seafood.
			Weems Bros Seafood Co.
			Weiskopf Fisheries LLC.
			Wendy & Eric Inc.
			Wescovich Inc.
			West Point Trawlers Inc.
			Westley J Domangue.
			WH Blanchard Inc.
			Whiskey Joe Inc.
			White and Black.
			White Bird.
			White Foam.
			White Gold.
			Wilcox Shrimping Inc.
			Wild Bill.
			Wild Eagle Inc.
			William E Smith Jr Inc.
			William Lee Inc.
			William O Nelson Jr.
			William Patrick Inc.
			William Smith Jr Inc.
			Willie Joe Inc.
			Wind Song Inc.
			Wonder Woman.
			Woods Fisheries Inc.
			Woody Shrimp Co Inc.
			Yeaman's Inc.
			Yen Ta.
			Yogi's Shrimp.
			You & Me Shrimp.
			Ysclaskey Seafood.
			Zirlott Trawlers Inc.
			Zirlott Trawlers Inc.

[FR Doc. 2014–12250 Filed 5–30–14; 8:45 am]
BILLING CODE 9111–14–P

FEDERAL REGISTER

Vol. 79 Monday,

No. 105 June 2, 2014

Part III

Environmental Protection Agency

40 CFR Chapter I

Identification of Nonattainment Classification and Deadlines for Submission of State Implementation Plan (SIP) Provisions for the 1997 Fine Particle ($PM_{2.5}$) National Ambient Air Quality Standard (NAAQS) and 2006 $PM_{2.5}$ NAAQS; Final Rule

ENVIRONMENTAL PROTECTION AGENCY

40 CFR Chapter I

[EPA–HQ–OAR–2013–0694, FRL–9909–93–OAR]

RIN 2060–AS12

Identification of Nonattainment Classification and Deadlines for Submission of State Implementation Plan (SIP) Provisions for the 1997 Fine Particle ($PM_{2.5}$) National Ambient Air Quality Standard (NAAQS) and 2006 $PM_{2.5}$ NAAQS

AGENCY: Environmental Protection Agency.

ACTION: Final rule.

SUMMARY: On January 4, 2013, in *Natural Resources Defense Council (NRDC)* v. *EPA,* the D.C. Circuit Court remanded to the Environmental Protection Agency (EPA) the ''Final Clean Air Fine Particle Implementation Rule'' (April 25, 2007) (the ''2007 $PM_{2.5}$ Implementation Rule'') and the ''Implementation of the New Source Review (NSR) Program for Particulate Matter Less than 2.5 Micrometers ($PM_{2.5}$)'' final rule (May 16, 2008) (the ''2008 $PM_{2.5}$ NSR Rule''). The Court found that the EPA erred in implementing the 1997 $PM_{2.5}$ National Ambient Air Quality Standards (NAAQS) pursuant solely to the general implementation provisions of subpart 1 of Part D of Title I of the Clean Air Act (CAA or Act), without also considering the particulate matter-specific provisions of subpart 4 of Part D. The Court's ruling remanded the rules to the EPA to address implementation of the 1997 $PM_{2.5}$ NAAQS under subpart 4. This final rulemaking identifies the classification under subpart 4 for areas currently designated nonattainment for the 1997 and/or 2006 $PM_{2.5}$ standards, the deadlines for states to submit attainment-related and nonattainment new source review (NNSR) state implementation plan (SIP) elements required for these areas pursuant to subpart 4, and the EPA guidance that is currently available regarding subpart 4 requirements. The final deadlines for 1997 and 2006 $PM_{2.5}$ NAAQS attainment-related SIP submissions and NNSR requirements for nonattainment areas would replace previous deadlines that were set solely pursuant to subpart 1. Specifically, the EPA is identifying the initial classification of current 1997 and/or 2006 $PM_{2.5}$ NAAQS nonattainment areas as ''Moderate,'' and the EPA is setting a deadline of December 31, 2014, for submission of remaining required SIP submissions for these areas, pursuant to and considering the application of subpart 4. This rulemaking affects 1997 and 2006 $PM_{2.5}$ NAAQS nonattainment areas. After the careful consideration of the comments received on the proposal, the EPA is planning to finalize the rule as it was proposed. As part of the final rulemaking, the EPA is also updating 40 CFR part 81, ''Designation of Areas for Air Quality Planning Purposes'' for the 1997 and 2006 $PM_{2.5}$ NAAQS nonattainment areas.

DATES: This final rule is effective on July 2, 2014.

ADDRESSES: The EPA has established a docket for this action under Docket ID No. EPA–HQ–OAR–2013–0694. All documents in the docket are listed on the *www.regulations.gov* Web site. Although listed in the index, some information is not publicly available, i.e., confidential business information or other information whose disclosure is restricted by statute. Certain other material, such as copyrighted material, will be publicly available only in hard copy. Publicly available docket materials are available either electronically in *www.regulations.gov* or in hard copy at the Docket ID No. EPA–HQ–OAR–2010–0605, EPA/DC, William Jefferson Clinton West Building, Room 3334, 1301 Constitution Avenue Northwest, Washington, DC. The Public Reading Room is open from 8:30 a.m. to 4:30 p.m., Monday through Friday, excluding legal holidays. The telephone number for the Public Reading Room is (202) 566–1744 and the telephone number for the Air and Radiation Docket Information Center is (202) 566–1742. For additional information about the EPA's public docket, visit the EPA Docket Center homepage at: *http://www.epa.gov/epahome/dockets.htm.*

FOR FURTHER INFORMATION CONTACT: For further general information on this rulemaking, contact Ms. Mia South, Air Quality Policy Division, Office of Air Quality Planning and Standards (C539–01), Environmental Protection Agency, Research Triangle Park, North Carolina 27711; telephone number (919) 541–5550; fax number (919) 541–5315; email at *south.mia@epa.gov.*

SUPPLEMENTARY INFORMATION:

I. General Information

A. Does this action apply to me?

Entities potentially affected directly by this final rulemaking include state, local and tribal governments.

B. Where can I get a copy of this document and other related information?

In addition to being available in the docket, an electronic copy of this notice will be posted at *http://www.epa.gov/airquality/particlepollution/actions.html.*

C. How is this notice organized?

The information presented in this notice is organized as follows:

I. General Information
- A. Does this action apply to me?
- B. Where can I get a copy of this document and other related information?
- C. How is this notice organized?

II. Background for the Final Rulemaking

III. Initial Identification of ''Moderate'' Classification for $PM_{2.5}$ Nonattainment Areas under Subpart 4
- A. Summary of Proposal
- B. Comments and Responses
- C. Final Action

IV. Deadline for Submission of Remaining Required SIP Elements
- A. Summary of Proposal
- B. Comments and Responses
- C. Final Action

V. What guidance is currently available to states regarding subpart 4 requirements?
- A. Summary of Proposal
- B. Comments and Responses
- C. Final Response

VI. Statutory and Executive Order Reviews
- A. Executive Order 12866: Regulatory Planning and Review and Executive Order 13563: Improving Regulation and Regulatory Review
- B. Paperwork Reduction Act
- C. Regulatory Flexibility Act
- D. Unfunded Mandates Reform Act
- E. Executive Order 13132: Federalism
- F. Executive Order 13175: Consultation and Coordination with Indian Tribal Governments
- G. Executive Order 13045: Protection of Children from Environmental Health and Safety Risks
- H. Executive Order 13211: Actions Concerning Regulations That Significantly Affect Energy Supply, Distribution, or Use
- I. National Technology Transfer and Advancement Act
- J. Executive Order 12898: Federal Actions to Address Environmental Justice in Minority Populations and Low-Income Populations
- K. Congressional Review Act
- L. Judicial Review

Statutory Authority

List of Subjects

II. Background for the Final Rulemaking

On January 4, 2013, in *NRDC* v. *EPA,* the DC Circuit Court remanded to the EPA the 2007 $PM_{2.5}$ Implementation Rule and the 2008 $PM_{2.5}$ NSR Rule. 706 F.3d 428 (D.C. Cir. 2013). Prior to the Court's decision, and continuously since 2005, the EPA had implemented

the 1997 and 2006 $PM_{2.5}$ NAAQS pursuant to regulations and guidance [1] that were based on the general implementation provisions of subpart 1. The Court found that the EPA erred in implementing the 1997 $PM_{2.5}$ NAAQS solely pursuant to subpart 1, without consideration of the particulate matter-specific provisions of subpart 4.

The subpart 4 requirements for areas classified as Moderate are generally comparable to those of subpart 1. The general provisions for requirements for all nonattainment areas for subpart 4 include: (1) Section 189(a)(1)(A) (NNSR permit program); (2) section 189(a)(1)(B) (attainment demonstration or demonstration that attainment by the applicable attainment date is impracticable); (3) section 189(a)(1)(C) (reasonably available control measures (RACM) and reasonable available control technology (RACT)); (4) section 189(c) (reasonable further progress (RFP) and quantitative milestones); and (5) section 189(e) (precursor requirements for major stationary sources). Subpart 4 introduces additional statutory SIP planning requirements in the event that the EPA reclassifies a Moderate nonattainment area to a Serious nonattainment area and in the event the area needs extensions of time to attain the NAAQS. The General Preamble and Addendum provide useful guidance on the specific subpart 4 statutory requirements.[2]

Following the January 2013 court decision, the EPA considered the implications of this decision on its implementation of the 1997 and 2006 $PM_{2.5}$ standards and determined that it was important to clarify certain key issues. Accordingly, on November 21, 2013 (78 FR 69806), the EPA published a notice of proposed rulemaking seeking comment on the EPA's proposed identification of the classification under subpart 4 for areas currently designated nonattainment for these two standards, the deadlines for states to submit attainment-related and NNSR SIP elements required for these areas pursuant to subpart 4, and the EPA guidance that is currently available regarding subpart 4 requirements. In response to the notice of proposed rulemaking, the EPA received sixteen substantive comments. A summary of significant comments received and the EPA's response is provided throughout this notice. To review the full Responses to Comment Document, *see* Docket ID No. EPA–HQ–OAR–2013–0694.

In this final rulemaking, the EPA takes additional steps to respond to the court's remand and to address the implementation of the 1997 and 2006 $PM_{2.5}$ NAAQS under subpart 4. In light of the long history of implementation of these standards under subpart 1, the EPA's final rulemaking seeks to integrate and harmonize ongoing implementation under subpart 1 with the subpart 4 requirements the Court has directed the EPA to address.

The states that are most affected by this rule include states that have 1997 and/or 2006 $PM_{2.5}$ NAAQS nonattainment areas that meet one of the following criteria: (1) There has been no SIP submission for the 1997 and/or 2006 $PM_{2.5}$ NAAQS; (2) there is no clean data determination; and (3) a complete redesignation request will not have been submitted prior to December 31, 2014.[3]

III. Initial Identification of ''Moderate'' Classification for $PM_{2.5}$ Nonattainment Areas Under Subpart 4

A. Summary of Proposal

Under the EPA's prior approach to implementing the 1997 and 2006 $PM_{2.5}$ standards according to subpart 1, the EPA was not required to, and did not, identify any classifications for areas designated nonattainment. By contrast, subpart 4 of the CAA, section 188, provides that all areas designated nonattainment are initially classified ''by operation of law'' as ''Moderate'' nonattainment areas, and they remain classified as Moderate nonattainment areas unless and until the EPA later reclassifies them as Serious nonattainment areas or the EPA determines that an area has not attained the $PM_{2.5}$ NAAQS by the area's applicable attainment date. Therefore, the EPA proposed to identify all $PM_{2.5}$ nonattainment areas as ''Moderate.''

B. Comments and Responses

Two public interest groups commented that the classification of $PM_{2.5}$ nonattainment areas as ''Moderate'' occurs by operation of law upon designation, and therefore this Moderate classification does not require any EPA action beyond the initial designation of an area as nonattainment.

The EPA agrees that the CAA provides that all areas designated nonattainment are initially classified as ''Moderate.'' However, as explained in the proposal, the *NRDC* holding that the EPA erred in implementing the 1997 $PM_{2.5}$ NAAQS solely pursuant to subpart 1 should not be applied retroactively. Nonattainment area designations for all areas became effective many years before the 2013 *NRDC* decision. *See* 70 FR 944, January 5, 2005; 74 FR 58688, November 13, 2009; 76 FR 6056, February 3, 2011. Subpart 1 contains no nondiscretionary provision for classification of nonattainment areas. Under the interpretation, which prevailed during years of implementation prior to the DC Circuit's 2013 ruling, no classifications were identified or recognized, nor were subpart 4 classifications implemented. In accordance with the *NRDC* decision, and because the EPA has not previously identified nonattainment area classifications under subpart 4 for areas designated nonattainment for the 1997 and 2006 $PM_{2.5}$ standards, the EPA has done so in this rulemaking to clarify the current classification of areas.

A public interest group also commented that this rulemaking should identify Libby, Montana, San Joaquin Valley, California, and the Los Angeles-South Coast Air Basin, California, as having failed to attain the 1997 $PM_{2.5}$ standards by the subpart 4 statutory attainment deadline and explain that the areas were reclassified by operation of law as Serious, as required by 42 U.S.C. 7513(b)(2). The commenter further claimed that Libby, Montana, San Joaquin Valley, California, and the Los Angeles-South Coast Air Basin, California, should be required to submit Serious area plans for the 1997 $PM_{2.5}$ standard that satisfy the subpart 4 requirements.

As explained in the proposal and previously in this section, the EPA believes that the DC Circuit Court's 2013 holding in *NRDC* should not be applied retroactively. States with areas designated nonattainment for the 1997 $PM_{2.5}$ standard had previously been instructed by the EPA, prior to the

[1] ''Implementation Guidance for the 2006 24-Hour Fine Particle ($PM_{2.5}$) National Ambient Air Quality Standards (NAAQS),'' from Stephen D. Page, Director, Office of Air Quality Planning and Standards, to Regional Air Directors, Region I–X, March 2, 2012. This guidance was withdrawn on June 6, 2013.

[2] ''State Implementation Plans; General Preamble for the Implementation of Title I of the Clean Air Act Amendments of 1990'' (57 FR 13498, April 16, 1992) (the ''General Preamble'') and ''State Implementation Plans for Serious PM–10 Nonattainment Areas, and Attainment Date Waivers for PM–10 Nonattainment Areas Generally; Addendum to the General Preamble for the Implementation of Title I of the Clean Air Act Amendments of 1990'' (59 FR 41998, August 16, 1994) (the ''Addendum'').

[3] For the current status of 1997 $PM_{2.5}$ NNSR SIPs, *see http://www.epa.gov/airquality/urbanair/sipstatus/reports/pm-2.5_1997_pm-2.5_nonattainment_nsr_enbystate.html.* For the current status of 1997 $PM_{2.5}$ attainment-related SIPs, *see http://www.epa.gov/airquality/urbanair/sipstatus/reports/pm-2.5_1997_pm-2.5_attainment_demonstration_enbystate.html.* For the current status of 2006 $PM_{2.5}$ NNSR SIPs, *see http://www.epa.gov/airquality/urbanair/sipstatus/reports/pm-2.5_2006_pm-2.5_nonattainment_nsr_enbystate.html.* For the current status of 2006 $PM_{2.5}$ attainment-related SIPs, *see http://www.epa.gov/airquality/urbanair/sipstatus/reports/pm-2.5_2006_pm-2.5_attainment_demonstration_enbystate.html.*

NRDC decision, to implement and attain the 1997 $PM_{2.5}$ standard according to the general implementation provisions of subpart 1 as provided in the EPA's implementation rules. The EPA therefore disagrees that Libby, Montana, San Joaquin Valley, California, and the Los Angeles-South Coast Air Basin, California, were required to attain the 1997 $PM_{2.5}$ standard no later than the statutory attainment date provided in subpart 4. As of that date, the EPA was implementing the 1997 standard pursuant to subpart 1, and no court had ruled that the EPA or any state should implement the $PM_{2.5}$ standard under the provisions of subpart 4. The EPA therefore disagrees that Libby, Montana, San Joaquin Valley, California, and the Los Angeles-South Coast Air Basin, California, were reclassified ''by operation of law'' as Serious no later than June 30, 2011, as the commenter contends. Because these areas are classified as Moderate, and not Serious, the affected states are required at this time to submit plans for these areas that satisfy CAA section 189(a) and not section 189(b)(1).

At some future time, the EPA may reclassify as Serious any nonattainment area that the EPA determines cannot practicably attain the $PM_{2.5}$ NAAQS by the applicable attainment date. These areas may also be reclassified as Serious by operation of law if the Administrator determines that any area has not in fact attained the $PM_{2.5}$ NAAQS after each area's applicable attainment date has passed.[4]

C. Final Action

Pursuant to subpart 4 of the CAA, section 188, and section 301 of the CAA, the EPA in this notice is identifying the classification of all $PM_{2.5}$ areas currently designated nonattainment for the 1997 and 2006 NAAQS as ''Moderate.'' Thus, the provisions of subpart 4 relevant to areas currently designated nonattainment for the 1997 and/or 2006 $PM_{2.5}$ NAAQS would initially be those applicable to Moderate areas.

IV. Deadline for Submission of Remaining Required SIP Elements

A. Summary of Proposal

The EPA proposed to set a deadline of December 31, 2014, for the states to submit any additional attainment-related SIP elements that may be needed to meet the applicable requirements of subpart 4 for areas currently designated nonattainment for the 1997 and/or 2006 $PM_{2.5}$ NAAQS, and to submit SIPs addressing the NNSR requirements in subpart 4. The EPA proposed this date because the EPA believes that this period provides a relatively brief but reasonable amount of time for states to ascertain whether and to what extent any additional submissions are needed for a particular 1997 or 2006 $PM_{2.5}$ NAAQS nonattainment area, and to develop, adopt and submit any such SIPs. States with $PM_{2.5}$ NAAQS nonattainment areas have already been working on needed submittals, and the EPA will continue working with them to ensure timely submissions.

B. Comments and Responses

Several public interest groups and individuals commented that the EPA does not have authority to reset the deadlines and/or should not provide states until December 31, 2014, to submit SIPs complying with subpart 4 requirements. These commenters believe that SIPs for the 1997 and 2006 $PM_{2.5}$ standards are overdue.

The EPA disagrees with the commenters. As stated in the proposal and previously in this notice, it is the EPA's position that the *NRDC* decision does not apply retroactively, including to create an obligation in the past for states to submit implementation plans under subpart 4 demonstrating attainment of the $PM_{2.5}$ NAAQS. Prior to the Court's decision, the prevailing implementation rulemaking instructed states to submit plans solely under subpart 1. The DC Circuit Court did not vacate this rule. Nor did the Court compel the EPA to treat the deadlines for the obligations the Court announced in its decision as already having lapsed, and the states as if they had already failed to meet these obligations. Instead, the DC Circuit Court remanded the rules to the EPA for repromulgation under subpart 4. Thus, the *NRDC* decision directed that the EPA act prospectively to implement the $PM_{2.5}$ NAAQS under subpart 4 through one or more national rulemakings consistent with the *NRDC* decision. This action is one such rulemaking.

Because of the complexity of the CAA's SIP provisions and the interrelationship between federal and state action, the EPA believes it is inappropriate to impose retroactive effect on decisions in a manner that would create deadlines that have long passed. Courts have supported this position. For example, in *Sierra Club* v. *Whitman,* 285 F.3d 63 (D.C. Cir. 2002), the DC Circuit Court of Appeals addressed an EPA failure to make a timely determination of failure to attain the applicable ozone NAAQS and to reclassify the St. Louis, Missouri area. *Id.* at 65. Reclassification would have resulted in requirements for the area to submit new attainment plans. *Id.* The DC Circuit Court ruled that the EPA was required to make the determination, but expressly rejected the Sierra Club's request to consider the area as reclassified as of the date that the EPA's determination should have been made. *Id.* at 67–68. The DC Circuit Court refused to impose the statutory deadline for SIP submittals when that deadline had passed long before the court's decision. *Id.* at 67–68. The DC Circuit Court noted that backdating the EPA's determination would only make the situation worse by likely imposing large costs on the states for failing to develop SIPs years earlier even though the states were not on notice at the time of their obligation to do so. *Id.* at 68.

This rulemaking is not an extension of the deadline established by the EPA when it was implementing the $PM_{2.5}$ standards according to subpart 1. Rather, this rulemaking makes that deadline no longer operative, since the EPA is no longer following only subpart 1 to implement the $PM_{2.5}$ standards. Under the unique circumstances presented here, the EPA relies on its authority under section 301 of the CAA to establish a reasonable, and expeditious, deadline, of December 31, 2014, by which states must submit SIPs consistent with the subpart 4 requirements.

Several commenters suggested that the EPA should allow states more time to submit any remaining SIP planning requirements and NNSR SIP submissions required pursuant to subpart 4, and therefore the deadline for submissions should be later than December 31, 2014.

The EPA disagrees with the commenters. Subpart 4, section 188, provides that states are to submit required plans 18 months after an area is designated nonattainment. However, the *NRDC* case was not decided until years after areas were designated nonattainment under subpart 1 of the CAA. In light of the timing and substance of the DC Circuit Court's opinion, the EPA believes that states should be provided a reasonable opportunity to submit any remaining SIP planning requirements and NNSR SIP submissions required pursuant to subpart 4. The EPA believes that setting the deadline for such submissions as December 31, 2014, provides a relatively brief but reasonable amount of time for states to ascertain whether and to what extent any additional submissions are

[4] In the General Preamble, the EPA has previously addressed the requirements of CAA section 188 concerning classifications under subpart 4, including the issue of discretionary and mandatory reclassification from Moderate to Serious. *See* 57 FR 13498, at 13537–8.

needed for a particular nonattainment area, and to develop, adopt, and submit any such plans. States with $PM_{2.5}$ NAAQS nonattainment areas have already been working on needed submittals, and the EPA will continue working with them to ensure timely submissions. In determining a deadline, the EPA considered: The amount of time that has passed since the *NRDC* decision, when this rulemaking will be finalized, and the amount of time remaining before the 2006 $PM_{2.5}$ NAAQS attainment deadline under subpart 4 for most areas of December 31, 2015.[5] The EPA is balancing the desire to allow states a reasonable amount of time to develop SIP submissions that conform to subpart 4 requirements, while leaving enough time before the 2006 $PM_{2.5}$ NAAQS attainment date so that state plans have time to be implemented and work. In consideration of all of these circumstances, the EPA believes December 31, 2014, is a reasonable deadline.

Several public interest groups and individuals commented that instead of allowing states until December 31, 2014, to submit SIPs for $PM_{2.5}$ NAAQS, the EPA should immediately find that areas failed to submit a SIP.

The EPA disagrees with the commenters. States' obligation to submit plans to the EPA demonstrating attainment of the 1997 and 2006 $PM_{2.5}$ NAAQS was triggered by the EPA's designation of the relevant areas as nonattainment. The EPA, consistent with its prior interpretation of the Act, implemented the $PM_{2.5}$ standards according to, and instructed states to follow only the requirements of subpart 1. Subpart 1 requires states to submit SIPs to demonstrate attainment of the NAAQS by a date established by the EPA that is no later than three years after the date of designation of an area as nonattainment. 42 U.S.C. 7502(b).

The EPA also explained in various rulemaking and guidance documents that SIPs would need to meet the requirements of section 172(c) of the CAA, which governs submissions under subpart 1. Thus, states were not instructed to submit their $PM_{2.5}$ NAAQS SIPs under the subpart 4 timeline, and they were not instructed to submit a $PM_{2.5}$ NAAQS SIP to meet the requirements of subpart 4. Therefore, the prevailing regulatory regime continuously since 2005, and until the *NRDC* decision in 2013, required submission only of subpart 1 plan on or before deadlines established according to subpart 1. As a result, the EPA has no outstanding duty to find that states have failed to make subpart 4 submissions that had not previously been required of states and which were unknown to them at the time.

If the EPA were to give retroactive effect to the *NRDC* decision when the DC Circuit Court declined to do so, and impose past duties on states, the EPA would effectively penalize states that followed the EPA's guidance and regulations to prepare SIPs in accordance with the timing and content of subpart 1. An EPA finding of failure to submit a SIP under subpart 4 that the commenter seeks would not give the states the opportunity to prepare or submit an appropriate SIP before being found in default of that obligation.

Because the states had no notice of the timing or content of any alleged earlier subpart 4 submissions, the EPA believes that the Administrator does not have a nondiscretionary duty to find failures to submit subpart 4 SIPs, and it would be inappropriate to issue such a finding.

The EPA's position on this issue has been recently upheld in federal court. In *Wildearth Guardians* v. *McCarthy,* 2014 U.S. Dist. LEXIS 31267, March 11, 2014 (D. Colo.), Wildearth Guardians claimed that states' 2006 $PM_{2.5}$ NAAQS SIPs should have been submitted according to the timeline laid out in subpart 4 of the CAA, which would have been no later than June 14, 2011. Because the states had made no SIP submission, Wildearth Guardians claimed that the EPA was required to make a finding that states had failed to submit subpart 4 SIPs. The Court dismissed the claim and agreed with the EPA's position that ''the *NRDC* court intended its decision to be prospective in effect, rather than retroactive.'' *Id.* at *9. The Court also agreed that ''the States were entitled to rely on the [2007 $PM_{2.5}$] Implementing Rule promulgated by the EPA in scheduling the pace with which they would proceed in developing their $PM_{2.5}$ SIPs.'' *Id.* at *10.

The EPA believes that its position is supported by further case law, as well. In *Sierra Club* v. *EPA,* 356 F.3d 296 (D.C. Cir. 2004), the Court addressed the EPA's decision to reclassify Washington, DC from a Serious to Severe nonattainment area for ozone and declined to require the EPA to make the reclassification retroactive. *Id.* at 308. The reclassification had the effect of imposing additional obligations on Washington, DC, for which the deadlines had already passed. *Id.* at 309. The DC Circuit Court rejected the Sierra Club's argument because it ''would give the reclassification retroactive effect by holding the states in default of their submission obligations before the events necessary to trigger that obligation (reclassification) . . . occurred.'' *Id.* at 309. Therefore, the Court declined to give the reclassification retroactive effect before any deadline had been announced, and where it would impose a SIP submission deadline that had already passed. *Id.* at 309–10. *See also Sierra Club* v. *Whitman,* 285 F.3d 63 (D.C. Cir. 2002).

To the extent that commenters are arguing that the EPA should determine that certain states failed to submit a subpart 1 plan by the previously established December 14, 2012 deadline, the EPA believes that this rulemaking removes the basis to do so. This rulemaking supersedes any other, previously established deadline for the submission of $PM_{2.5}$ NAAQS attainment or NNSR plans under subpart 1. In accordance with the Court's decision in *NRDC,* any deadline established by the EPA while the agency was implementing the $PM_{2.5}$ standards under subpart 1 is being superseded.

Several commenters asked that the EPA clarify which nonattainment areas are potentially affected by this rule.

The EPA identified in the proposal areas that appear to be most affected by this rule. These include areas for which states have not submitted a SIP and/or for which EPA has not yet made a determination of attainment of the 1997 or 2006 $PM_{2.5}$ NAAQS, and/or for which states have not yet submitted a request for redesignation to attainment for the $PM_{2.5}$ NAAQS.

It is not necessarily the case that no additional submissions under subpart 4 will be required of an area that has attained the $PM_{2.5}$ NAAQS or for which the EPA has approved attainment plans. This final rulemaking does not affect any action that the EPA has previously taken under section 110(k) of the Act on a SIP for a $PM_{2.5}$ NAAQS nonattainment area. However, this does not necessarily mean that areas for which the EPA has previously approved attainment demonstration or NNSR plans have met all requirements of the Act. States may need to submit additional SIP planning requirements and NNSR SIP elements for any area currently designated nonattainment to show that they meet all of the applicable requirements of subpart 4.

The EPA would also like to clarify what the EPA considers to be the application of the rulemaking for areas that have submitted complete redesignation requests. First, as a

[5] The EPA designation for the West Central Pinal area in Arizona as nonattainment for the 2006 $PM_{2.5}$ NAAQS became effective March 7, 2011. *See* 76 FR 6056, February 3, 2011. Therefore, the latest attainment date applicable to this area under subpart 4 is December 31, 2017.

general matter, pursuant to CAA section 175A(c), Part D requirements remain in effect until the EPA approves a redesignation request and an area is redesignated to attainment. However, for purposes of evaluating whether a redesignation request is approvable and meets the requirements of CAA section 107(d)(3)(E)(ii) and (v), the EPA's longstanding interpretation of section 107(d)(3)(E) of the CAA is that, as a threshold matter, the Part D provisions which are ''applicable'' and which must be approved in order for the EPA to redesignate an area include only those which came due prior to a state's submittal of a complete redesignation request. 78 FR 20856, 20861. *See also* ''Procedures for Processing Requests to Redesignate Areas to Attainment,'' Memorandum from John Calcagni, Director, Air Quality Management Division, September 4, 1992; *Sierra Club,* 375 F.3d 537. To the extent that implementation under subpart 4 would impose additional requirements for areas designated nonattainment, the EPA believes that those requirements are not ''applicable'' for the purposes of CAA section 107(d)(3)(E) in any area that has submitted a complete redesignation request prior to the due date for these requirements, and thus the EPA is not required to consider subpart 4 requirements with respect to areas that have submitted a complete redesignation request prior to December 31, 2014. Applicable requirements of the CAA that come due subsequent to the area's submittal of a complete redesignation request remain applicable until a redesignation is approved, but are not required as a prerequisite to redesignation.

Whether, and to what extent, any additional submissions are needed for a particular 1997 or 2006 $PM_{2.5}$ NAAQS nonattainment area will depend upon the circumstances of each individual nonattainment area. Based on the most up-to-date status of SIP submissions and approved SIPs, the EPA will continue working with states on a case-by-case basis to assist them in addressing subpart 4 requirements. For help with questions or further clarification, states should consult with their respective EPA regional offices.

C. Final Action

Through this final rulemaking action, the EPA is setting a deadline of December 31, 2014, for the states to submit any additional attainment-related SIP elements that may be needed to meet the applicable requirements of subpart 4 for areas currently designated nonattainment for the 1997 and/or 2006 $PM_{2.5}$ NAAQS, and to submit SIPs addressing the NNSR requirements in subpart 4. The EPA believes that this period provides a relatively brief but reasonable amount of time for states to ascertain whether and to what extent any additional submissions are needed for a particular 1997 or 2006 $PM_{2.5}$ nonattainment area,[6] and to develop, adopt and submit any such SIPs. Section 188(c)(1) of Subpart 4 establishes an attainment deadline of no later than the end of the sixth calendar year after designation as nonattainment. With respect to the 2006 24-hour $PM_{2.5}$ NAAQS, nonattainment area designations for most areas became effective in December 2009 (74 FR 58688, November 13, 2009). Thus, these areas are subject to a Moderate area attainment deadline under subpart 4 of no later than December 31, 2015. A SIP submission deadline of December 31, 2014, for these areas will therefore ensure that there is at least a year between SIP submission and attainment deadlines.[7] The December 31, 2014 deadline would allow a brief but reasonable amount of time for the states to modify their SIPs in consideration of subpart 4 in keeping with the timeframe established by the existing subpart 4 attainment deadline. With respect to the 1997 annual $PM_{2.5}$ NAAQS, although nonattainment area designations in most areas became effective more than 8 years ago (*see* 70 FR 944, January 5, 2005), the EPA is establishing for these areas the same subpart 4 SIP submission deadline that would apply for purposes of the 2006 $PM_{2.5}$ NAAQS (December 31, 2014), so that all states with $PM_{2.5}$ nonattainment areas have a reasonable amount of time to develop any additional SIP elements that may be required under subpart 4 in response to the *NRDC* decision. Thus, for all $PM_{2.5}$ nonattainment areas, the states would be required to submit any remaining SIPs that are necessary to satisfy the requirements applicable to Moderate nonattainment areas under subpart 4 of the Act no later than December 31, 2014.

V. What guidance is currently available to states regarding subpart 4 requirements?

A. Summary of Proposal

In the proposal, the EPA identified its longstanding general guidance that interprets the 1990 amendments to the CAA and made recommendations to states for meeting the statutory requirements for SIPs for nonattainment areas. *See* the General Preamble and the Addendum. The EPA also directed states to a series of recent rulemakings on Indianapolis and other areas, which provide helpful guidance. *See, e.g.,* ''Approval and Promulgation of Air Quality Implementation Plans; Indiana; Redesignation of the Indianapolis Area to Attainment of the 1997 Annual Standard for Fine Particulate Matter'' (78 FR 20856, April 8, 2013—proposal) (78 FR 41698, July 11, 2013—final).

B. Comments and Responses

Two states commented that more specific information is needed from the EPA regarding the requirements of subpart 4 for submissions for $PM_{2.5}$ Moderate area SIPs.

The CAA does not impose a requirement on the EPA to promulgate an implementation rule for any NAAQS. In the context of the unique circumstances presented here, the EPA seeks to respond in a timely way to the DC Circuit Court's *NRDC* decision and to enable states similarly to respond to the Court's decision that subpart 4 applies to implementation of $PM_{2.5}$ NAAQS. Thus, the EPA's purpose is to provide sufficient notice and information to enable the states to move forward in complying with the directive of the Court. This rulemaking is not intended to address all issues that would be germane to an implementation rule, but rather answer preliminary questions that arise in the shift in implementation solely under subpart 1 to also include subpart 4.

The EPA agrees that guidance to states is helpful to clarify requirements and to

[6] The answers to these questions will depend upon the circumstances of each individual nonattainment area, including whether the area's monitored air quality meets the standard, and whether the state has already made attainment-related and NNSR SIP submissions for the area. As the EPA has explained in its proposed rulemaking on Approval and Promulgation of Air Quality Implementation Plans; Indiana; Redesignation of the Indianapolis Area to Attainment of the 1997 Annual Standard for Fine Particulate Matter (78 FR 20856, April 8, 2013), it is also important to evaluate, for each area, the interrelationship of the two subparts, and whether the substance of subpart 1 and subpart 4 provisions, should, for certain purposes, be considered equivalent.

[7] The EPA designation for the West Central Pinal area in Arizona as nonattainment for the 2006 24-hour $PM_{2.5}$ standard became effective March 7, 2011. *See* 76 FR 6056, February 3, 2011. Although the latest attainment date applicable to this area under subpart 4 is December 31, 2017 (2 years later than the December 31, 2015, attainment date that applies to areas designated nonattainment in 2009), the EPA is requiring Arizona to submit an attainment SIP meeting the requirements of subpart 4 for the 2006 24-hour $PM_{2.5}$ standard for this area by the same December 31, 2014, date that we are requiring for other nonattainment areas. The December 31, 2014, SIP submission date would supplant the March 7, 2014, date by which the state was previously required under subpart 1 to submit a $PM_{2.5}$ attainment SIP for this area, and would provide a reasonable amount of additional time for the state to both develop the required subpart 4 SIP elements and implement its control strategy in advance of the applicable attainment date.

respond more comprehensively to the Court's remand, but the EPA believes that this rulemaking, combined with the EPA's longstanding general guidance interpreting the requirements of subpart 4 of the CAA, provides an adequate basis for states to develop Moderate area attainment plans and NNSR plans. In the General Preamble, the EPA discussed the relationship of subpart 1 and subpart 4 SIP requirements, and pointed out that subpart 1 requirements were to an extent ''subsumed by, or integrally related to, the more specific'' subpart 4 requirements. 57 FR at 13538. Moreover, subsequent to the *NRDC* decision, the EPA has issued rulemakings for individual areas in which the EPA has further elaborated on the relationship of subpart 1 and subpart 4 requirements in the context of making determinations of attainment for areas that have attained the 1997 $PM_{2.5}$ standard, approving requests to redesignate areas to attainment or approving an area's attainment demonstration.

C. Final Response

The EPA did not propose, nor is EPA at this time taking final action on an implementation rule governing $PM_{2.5}$ implementation under subpart 4. The EPA is currently developing a proposal for a new implementation rule that would apply to current and future $PM_{2.5}$ NAAQS. The agency plans to propose that rule later this year. The proposal will address a range of implementation requirements that apply to $PM_{2.5}$ nonattainment areas under subparts 1 and 4. Until that implementation rule is finalized, the EPA believes that the General Preamble, Addendum, and recent rulemakings on Indianapolis and other areas [8] provide helpful guidance for states in ascertaining the impact of subpart 4 requirements on their ongoing efforts to meet the 1997 and 2006 $PM_{2.5}$ standards and the EPA will approve states' submissions in accordance with those documents. For help with questions or further clarification, states should consult their respective EPA regional offices.

VI. Statutory and Executive Order Reviews

A. Executive Order 12866: Regulatory Planning and Review and Executive Order 13563: Improving Regulation and Regulatory Review

This action is not a ''significant regulatory action'' under the terms of Executive Order 12866 (58 FR 51735, October 4, 1993) and is therefore not subject to review under Executive Orders 12866 and 13563 (76 FR 3821, January 21, 2011).

B. Paperwork Reduction Act

This action does not impose an information collection burden under the provisions of the *Paperwork Reduction Act,* 44 U.S.C. 3501 *et seq.* Burden is defined at 5 CFR 1320.3(b). This final rulemaking identifies the classification under subpart 4 for areas currently designated nonattainment for the 1997 and/or 2006 $PM_{2.5}$ standards and the deadline for states to submit SIP elements for these areas that are required pursuant to subpart 4.

C. Regulatory Flexibility Act

The Regulatory Flexibility Act (RFA) generally requires an agency to prepare a regulatory flexibility analysis of any regulation subject to notice and comment rulemaking requirements under the Administrative Procedures Act or any other statute unless the agency certifies the rule will not have a significant economic impact on a substantial number of small entities. Small entities include small businesses, small organizations and small governmental jurisdictions.

For purposes of assessing the impacts of this rule on small entities, small entity is defined as: (1) A small business as defined in the Small Business Administration's (SBA) regulations at 13 CFR 121.201); (2) a small governmental jurisdiction that is a government of a city, county, town, school district or special district with a population of less than 50,000; and (3) a small organization that is any not-for-profit enterprise which is independently owned and operated and is not dominant in its field.

After considering the economic impacts of this final rule on small entities, I certify that this action will not have a significant economic impact on a substantial number of small entities. This final rule will not impose any requirements directly on small entities. Entities potentially affected directly by this final rulemaking include state, local and tribal governments and none of these governments are small governments. Other types of small entities are not directly subject to the requirements of this rule because this action only identifies the classification under subpart 4 for areas currently designated nonattainment for the 1997 and/or 2006 $PM_{2.5}$ standards and the deadline for states to submit SIP elements for these areas that are required pursuant to subpart 4.

D. Unfunded Mandates Reform Act

This action contains no federal mandate under the provisions of title II of the Unfunded Mandates Reform Act of 1995 (UMRA), 2 U.S.C. 1531–1538 for state, local and tribal governments, in the aggregate, or the private sector. This action imposes no enforceable duty on any state, local or tribal governments or the private sector. Therefore, this action is not subject to the requirements of section 202 and 205 of the UMRA.

This action is also not subject to the requirements of section 203 of the UMRA because it contains no regulatory requirements that might significantly or uniquely affect small governments. This final rulemaking identifies the classification under subpart 4 for areas currently designated nonattainment for the 1997 and/or 2006 $PM_{2.5}$ standards and the deadline for states to submit SIP elements for these areas that are required pursuant to subpart 4.

E. Executive Order 13132: Federalism

This action does not have federalism implications. It will not have substantial direct effects on the states, on the relationship between the national government and the states, or on the distribution of power and responsibilities among the various levels of government, as specified in Executive Order 13132. The requirement to submit SIP revisions to meet the 1997 and 2006 $PM_{2.5}$ NAAQS

[8] *See* also ''Redesignation of Ohio Portion of the Parkersburg-Marietta Area to Attainment of the 1997 Annual Standard for Fine Particulate Matter'' (78 FR 38256, June 26, 2013—proposal) (78 FR 53275, August 29, 2013—final); ''Redesignation of the Ohio Portion of the Wheeling Area to Attainment of the 1997 Annual Standard for Fine Particulate Matter'' (78 FR 38247, June 26, 2013—proposal) (78 FR 53275, August 29, 2013—final); ''Redesignation of the Detroit-Ann Arbor Area to Attainment of the 1997 Annual Standard and the 2006 24-Hour Standard for Fine Particulate Matter'' (7839654, July 2, 2013—proposal) (78 FR 53272, August 29, 2013—final); ''Redesignation of the Cleveland-Akron-Lorain Area for the 1997 Annual Standard and 2006 24-Hour Standard for Fine Particulate Matter'' (78 FR 45116, July 26, 2013—proposal) (78 FR 57270, September 18, 2013—final); ''Redesignation of the Ohio Portion of the Steubenville-Weirton Area to Attainment of the 1997 Annual and 2006 24-Hour Standards for Fine Particulate Matter'' (78 FR 41752, July 11, 2013—proposal) (78 FR 57273, September 18, 2013—final); ''Redesignation of Dayton-Springfield Area to Attainment of the 1997 Annual Standard for Fine Particulate Matter'' (78 FR 45135, July 26, 2013—proposal) (78 FR 59258, September 26, 2013—final); ''Redesignation of the Canton-Massillon Area to Attainment of the 1997 Annual and 2006 24-Hour Standards for Fine Particulate Matter'' (78 FR 48087, August 7, 2013—proposal) (78 FR 62459, October 22, 2013—final); and ''Attainment Plan for the Philadelphia-Wilmington, Pennsylvania-New Jersey-Delaware Nonattainment Area for the 1997 Annual Fine Particulate Matter Standard'' (78 FR 57573, September 19, 2013—proposal). For information on the on the most current **Federal Register** notices pertaining to clean data determinations and redesignations for 2006 $PM_{2.5}$ nonattainment areas see *http://www.epa.gov/airquality/greenbook/rfrnrpt1.html.*

requirements under subpart 4 is imposed by the CAA. This final rule interprets those requirements as they apply to the 1997 and 2006 $PM_{2.5}$ NAAQS. Thus, Executive Order 13132 does not apply to this action.

F. Executive Order 13175: Consultation and Coordination with Indian Tribal Governments

This action does not have tribal implications, as specified in Executive Order 13175 (65 FR 67249, November 9, 2000). It would not have a substantial direct effect on one or more Indian tribes, since no tribe has to develop an implementation plan under these regulatory revisions. Furthermore, these regulation revisions do not affect the relationship or distribution of power and responsibilities between the federal government and Indian tribes. The CAA and the Tribal Air Rule establish the relationship of the federal government and tribes in developing plans to attain the NAAQS, and these revisions to the regulations do nothing to modify that relationship. Thus, Executive Order 13175 does not apply to this action.

G. Executive Order 13045: Protection of Children from Environmental Health and Safety Risks

The EPA interprets EO 13045 (62 FR 19885, April 23, 1997) as applying only to those regulatory actions that concern health or safety risks, such that the analysis required under section 5–501 of the EO has the potential to influence the regulation. This action is not subject to EO 13045 because it does not establish an environmental standard intended to mitigate health or safety risks. This final rulemaking identifies the classification under subpart 4 for areas currently designated nonattainment for the 1997 and/or 2006 $PM_{2.5}$ standards and the deadline for states to submit SIP elements for these areas that are required pursuant to subpart 4.

H. Executive Order 13211: Actions Concerning Regulations That Significantly Affect Energy Supply, Distribution, or Use

This action is not subject to Executive Order 13211 (66 FR 28355 (May 22, 2001)), because it is not a significant regulatory action under Executive Order 12866.

I. National Technology Transfer and Advancement Act

Section 12(d) of the National Technology Transfer and Advancement Act of 1995 (NTTAA), Public Law 104–113, section 12(d) (15 U.S.C. 272 note) directs the EPA to use voluntary consensus standards in its regulatory activities unless to do so would be inconsistent with applicable law or otherwise impractical. Voluntary consensus standards are technical standards (e.g., materials specifications, test methods, sampling procedures and business practices) that are developed or adopted by voluntary consensus standards bodies. NTTAA directs the EPA to provide Congress, through OMB, explanations when the agency decides not to use available and applicable voluntary consensus standards.

This action does not involve technical standards. Therefore, the EPA is not considering the use of any voluntary consensus standards.

J. Executive Order 12898: Federal Actions to Address Environmental Justice in Minority Populations and Low-Income Populations

Executive Order (E.O.) 12898 (59 FR 7629 (Feb. 16, 1994)) establishes federal executive policy on environmental justice. Its main provision directs federal agencies, to the greatest extent practicable and permitted by law, to make environmental justice part of their mission by identifying and addressing, as appropriate, disproportionately high and adverse human health or environmental effects of their programs, policies and activities on minority populations and low-income populations in the United States. The EPA has determined that this action will not have disproportionately high and adverse human health or environmental effects on minority or low-income populations because it does not affect the level of protection provided to human health or the environment. This final rulemaking identifies the classification under subpart 4 for areas currently designated nonattainment for the 1997 and/or 2006 $PM_{2.5}$ standards and the deadline for states to submit SIP elements for these areas that are required pursuant to subpart 4.

K. Congressional Review Act

The Congressional Review Act, 5 U.S.C. 801 et seq., as added by the Small Business Regulatory Enforcement Fairness Act of 1996, generally provides that before a rule may take effect, the agency promulgating the rule must submit a rule report, which includes a copy of the rule, to each House of the Congress and to the Comptroller General of the U.S. The EPA will submit a report containing this rule and other required information to the U.S. Senate, the U.S. House of Representatives, and the Comptroller General of the U.S. prior to publication of the rule in the **Federal Register**. A major rule cannot take effect until 60 days after it is published in the **Federal Register**. This action is not a ''major rule'' as defined by 5 U.S.C. 804(2). This rule will be effective on July 2, 2014.

L. Judicial Review

Under section 307(b)(1) of the CAA, petitions for judicial review of this action must be filed in the United States Court of Appeals for the District of Columbia Circuit within 60 days from the date this action is published in the **Federal Register**. Filing a petition for reconsideration by the Administrator of this final action does not affect the finality of this action for the purposes of judicial review nor does it extend the time within which a petition for judicial review must be filed, and shall not postpone the effectiveness of this action.

Statutory Authority

The statutory authority for this action is provided by 42 U.S.C. 7407, 7410, 7502, 7513, 7513a and 7601.

List of Subjects in 40 CFR Chapter I

Environmental protection, Air pollution control, Intergovernmental relations, Particulate matter.

Dated: April 25, 2014.

Gina McCarthy,

Administrator.

For the reasons set forth in the preamble, 40 CFR part 81 is amended as follows:

PART 81—DESIGNATIONS OF AREAS FOR AIR QUALITY PLANNING PURPOSES

■ 1. The authority citation for part 81 continues to read as follows:

Authority: 42 U.S.C. 7401, *et seq.*

Subpart C—Section 107 Attainment Status Designations

■ 2. Section 81.301 is amended as follows:

■ a. By removing the tables titled ''Alabama—$PM_{2.5}$ (Annual NAAQS)'' and ''Alabama—$PM_{2.5}$ [24-hour NAAQS]''.

■ b. By adding three tables titled ''Alabama—1997 Annual $PM_{2.5}$ NAAQS (Primary and Secondary)'' and ''Alabama—1997 24-hour $PM_{2.5}$ NAAQS (Primary and Secondary)'' and ''Alabama—2006 24-hour $PM_{2.5}$ NAAQS (Primary and Secondary)'' before the table titled ''Alabama—NO_2 (1971 Annual Standard)'' .

The additions read as follows:

§ 81.301 Alabama.

* * * * *

ALABAMA—1997 ANNUAL $PM_{2.5}$ NAAQS

[Primary and secondary]

Designated area	Designation [a]		Classification	
	Date [1]	Type	Date [2]	Type
Birmingham, AL:				
Jefferson County	2/21/13	Attainment.		
Shelby County	2/21/13	Attainment.		
Walker County (part)	2/21/13	Attainment.		
The area described by U S Census 2000 block group identifiers 01–127–0214–5, 01–127–0215–4, and 01–127–0216–2.				
Chattanooga, TN–GA:				
Jackson County (part)		Nonattainment		Moderate.
The area described by U S Census 2000 block group identifier 01–071–9503–1.				
Rest of State:				
Autauga County		Unclassifiable/Attainment.		
Baldwin County		Unclassifiable/Attainment.		
Barbour County		Unclassifiable/Attainment.		
Bibb County		Unclassifiable/Attainment.		
Blount County		Unclassifiable/Attainment.		
Bullock County		Unclassifiable/Attainment.		
Butler County		Unclassifiable/Attainment.		
Calhoun County		Unclassifiable/Attainment.		
Chambers County		Unclassifiable/Attainment.		
Cherokee County		Unclassifiable/Attainment.		
Chilton County		Unclassifiable/Attainment.		
Choctaw County		Unclassifiable/Attainment.		
Clarke County		Unclassifiable/Attainment.		
Clay County		Unclassifiable/Attainment.		
Cleburne County		Unclassifiable/Attainment.		
Coffee County		Unclassifiable/Attainment.		
Colbert County		Unclassifiable/Attainment.		
Conecuh County		Unclassifiable/Attainment.		
Coosa County		Unclassifiable/Attainment.		
Covington County		Unclassifiable/Attainment.		
Crenshaw County		Unclassifiable/Attainment.		
Cullman County		Unclassifiable/Attainment.		
Dale County		Unclassifiable/Attainment.		
Dallas County		Unclassifiable/Attainment.		
DeKalb County		Unclassifiable/Attainment.		
Elmore County		Unclassifiable/Attainment.		
Escambia County		Unclassifiable/Attainment.		
Etowah County		Unclassifiable/Attainment.		
Fayette County		Unclassifiable/Attainment.		
Franklin County		Unclassifiable/Attainment.		
Geneva County		Unclassifiable/Attainment.		
Greene County		Unclassifiable/Attainment.		
Hale County		Unclassifiable/Attainment.		
Henry County		Unclassifiable/Attainment.		
Houston County		Unclassifiable/Attainment.		
Jackson County (remainder)		Unclassifiable/Attainment.		
Lamar County		Unclassifiable/Attainment.		
Lauderdale County		Unclassifiable/Attainment.		
Lawrence County		Unclassifiable/Attainment.		
Lee County		Unclassifiable/Attainment.		
Limestone County		Unclassifiable/Attainment.		
Lowndes County		Unclassifiable/Attainment.		
Macon County		Unclassifiable/Attainment.		
Madison County		Unclassifiable/Attainment.		
Marengo County		Unclassifiable/Attainment.		
Marion County		Unclassifiable/Attainment.		
Marshall County		Unclassifiable/Attainment.		
Mobile County		Unclassifiable/Attainment.		
Monroe County		Unclassifiable/Attainment.		
Montgomery County		Unclassifiable/Attainment.		
Morgan County		Unclassifiable/Attainment.		
Perry County		Unclassifiable/Attainment.		
Pickens County		Unclassifiable/Attainment.		
Pike County		Unclassifiable/Attainment.		
Randolph County		Unclassifiable/Attainment.		
Russell County		Unclassifiable/Attainment.		

ALABAMA—1997 ANNUAL $PM_{2.5}$ NAAQS—Continued

[Primary and secondary]

Designated area	Designation [a]		Classification	
	Date [1]	Type	Date [2]	Type
St Clair County		Unclassifiable/Attainment.		
Sumter County		Unclassifiable/Attainment.		
Talladega County		Unclassifiable/Attainment.		
Tallapoosa County		Unclassifiable/Attainment.		
Tuscaloosa County		Unclassifiable/Attainment.		
Walker County (remainder)		Unclassifiable/Attainment.		
Washington County		Unclassifiable/Attainment.		
Wilcox County		Unclassifiable/Attainment.		
Winston County		Unclassifiable/Attainment.		

[a] Includes Indian Country located in each county or area, except as otherwise specified.
[1] This date is 90 days after January 5, 2005, unless otherwise noted.
[2] This date is July 2, 2014, unless otherwise noted.

ALABAMA—1997 24-HOUR $PM_{2.5}$ NAAQS

[Primary and secondary]

Designation area	Designation [a]		Classification	
	Date [1]	Type	Date	Type
Statewide:				
Autauga County		Unclassifiable/Attainment.		
Baldwin County		Unclassifiable/Attainment.		
Barbour County		Unclassifiable/Attainment.		
Bibb County		Unclassifiable/Attainment.		
Blount County		Unclassifiable/Attainment.		
Bullock County		Unclassifiable/Attainment.		
Butler County		Unclassifiable/Attainment.		
Calhoun County		Unclassifiable/Attainment.		
Chambers County		Unclassifiable/Attainment.		
Cherokee County		Unclassifiable/Attainment.		
Chilton County		Unclassifiable/Attainment.		
Choctaw County		Unclassifiable/Attainment.		
Clarke County		Unclassifiable/Attainment.		
Clay County		Unclassifiable/Attainment.		
Cleburne County		Unclassifiable/Attainment.		
Coffee County		Unclassifiable/Attainment.		
Colbert County		Unclassifiable/Attainment.		
Conecuh County		Unclassifiable/Attainment.		
Coosa County		Unclassifiable/Attainment.		
Covington County		Unclassifiable/Attainment.		
Crenshaw County		Unclassifiable/Attainment.		
Cullman County		Unclassifiable/Attainment.		
Dale County		Unclassifiable/Attainment.		
Dallas County		Unclassifiable/Attainment.		
DeKalb County		Unclassifiable/Attainment.		
Elmore County		Unclassifiable/Attainment.		
Escambia County		Unclassifiable/Attainment.		
Etowah County		Unclassifiable/Attainment.		
Fayette County		Unclassifiable/Attainment.		
Franklin County		Unclassifiable/Attainment.		
Geneva County		Unclassifiable/Attainment.		
Greene County		Unclassifiable/Attainment.		
Hale County		Unclassifiable/Attainment.		
Henry County		Unclassifiable/Attainment.		
Houston County		Unclassifiable/Attainment.		
Jackson County		Unclassifiable/Attainment.		
Jefferson County		Unclassifiable/Attainment.		
Lamar County		Unclassifiable/Attainment.		
Lauderdale County		Unclassifiable/Attainment.		
Lawrence County		Unclassifiable/Attainment.		
Lee County		Unclassifiable/Attainment.		
Limestone County		Unclassifiable/Attainment.		
Lowndes County		Unclassifiable/Attainment.		
Macon County		Unclassifiable/Attainment.		
Madison County		Unclassifiable/Attainment.		
Marengo County		Unclassifiable/Attainment.		
Marion County		Unclassifiable/Attainment.		

ALABAMA—1997 24-HOUR $PM_{2.5}$ NAAQS—Continued

[Primary and secondary]

Designation area	Designation [a]		Classification	
	Date [1]	Type	Date	Type
Marshall County		Unclassifiable/Attainment.		
Mobile County		Unclassifiable/Attainment.		
Monroe County		Unclassifiable/Attainment.		
Montgomery County		Unclassifiable/Attainment.		
Morgan County		Unclassifiable/Attainment.		
Perry County		Unclassifiable/Attainment.		
Pickens County		Unclassifiable/Attainment.		
Pike County		Unclassifiable/Attainment.		
Randolph County		Unclassifiable/Attainment.		
Russell County		Unclassifiable/Attainment.		
Shelby County		Unclassifiable/Attainment.		
St Clair County		Unclassifiable/Attainment.		
Sumter County		Unclassifiable/Attainment.		
Talladega County		Unclassifiable/Attainment.		
Tallapoosa County		Unclassifiable/Attainment.		
Tuscaloosa County		Unclassifiable/Attainment.		
Walker County		Unclassifiable/Attainment.		
The area described by U.S. Census 2000 block group identifiers 01–127–0214–5, 01–127–0215–4, and 01–127–0216–2.				
Washington County		Unclassifiable/Attainment.		
Wilcox County		Unclassifiable/Attainment.		
Winston County		Unclassifiable/Attainment.		

[a] Includes Indian Country located in each county or area, except as otherwise specified.
[1] This date is 90 days after January 5, 2005, unless otherwise noted.

ALABAMA—2006 24-HOUR $PM_{2.5}$ NAAQS

[Primary and secondary]

Designation area	Designation [a]		Classification	
	Date [1]	Type	Date	Type
Birmingham, AL:				
Jefferson County	2/25/13	Attainment..		
Shelby County	2/25/13	Attainment..		
Walker County (part)	2/25/13	Attainment..		
The area described by U S Census 2000 block group identifiers 01–127–0214–5, 01–127–0215–4, and 01–127–0216–2.				
Etowah County		Unclassifiable..		
Rest of State:				
Autauga County		Unclassifiable/Attainment.		
Baldwin County		Unclassifiable/Attainment.		
Barbour County		Unclassifiable/Attainment.		
Bibb County		Unclassifiable/Attainment.		
Blount County		Unclassifiable/Attainment.		
Bullock County		Unclassifiable/Attainment.		
Butler County		Unclassifiable/Attainment.		
Calhoun County		Unclassifiable/Attainment.		
Chambers County		Unclassifiable/Attainment.		
Cherokee County		Unclassifiable/Attainment.		
Chilton County		Unclassifiable/Attainment.		
Choctaw County		Unclassifiable/Attainment.		
Clarke County		Unclassifiable/Attainment.		
Clay County		Unclassifiable/Attainment.		
Cleburne County		Unclassifiable/Attainment.		
Coffee County		Unclassifiable/Attainment.		
Colbert County		Unclassifiable/Attainment.		
Conecuh County		Unclassifiable/Attainment.		
Coosa County		Unclassifiable/Attainment.		
Covington County		Unclassifiable/Attainment.		
Crenshaw County		Unclassifiable/Attainment.		
Cullman County		Unclassifiable/Attainment.		
Dale County		Unclassifiable/Attainment.		
Dallas County		Unclassifiable/Attainment.		
DeKalb County		Unclassifiable/Attainment.		
Elmore County		Unclassifiable/Attainment.		

ALABAMA—2006 24-HOUR $PM_{2.5}$ NAAQS—Continued

[Primary and secondary]

Designation area	Designation [a]		Classification	
	Date [1]	Type	Date	Type
Escambia County		Unclassifiable/Attainment.		
Fayette County		Unclassifiable/Attainment.		
Franklin County		Unclassifiable/Attainment.		
Geneva County		Unclassifiable/Attainment.		
Greene County		Unclassifiable/Attainment.		
Hale County		Unclassifiable/Attainment.		
Henry County		Unclassifiable/Attainment.		
Houston County		Unclassifiable/Attainment.		
Jackson County		Unclassifiable/Attainment.		
Lamar County		Unclassifiable/Attainment.		
Lauderdale County		Unclassifiable/Attainment.		
Lawrence County		Unclassifiable/Attainment.		
Lee County		Unclassifiable/Attainment.		
Limestone County		Unclassifiable/Attainment.		
Lowndes County		Unclassifiable/Attainment.		
Macon County		Unclassifiable/Attainment.		
Madison County		Unclassifiable/Attainment.		
Marengo County		Unclassifiable/Attainment.		
Marion County		Unclassifiable/Attainment.		
Marshall County		Unclassifiable/Attainment.		
Mobile County		Unclassifiable/Attainment.		
Monroe County		Unclassifiable/Attainment.		
Montgomery County		Unclassifiable/Attainment.		
Morgan County		Unclassifiable/Attainment.		
Perry County		Unclassifiable/Attainment.		
Pickens County		Unclassifiable/Attainment.		
Pike County		Unclassifiable/Attainment.		
Randolph County		Unclassifiable/Attainment.		
Russell County		Unclassifiable/Attainment.		
St Clair County		Unclassifiable/Attainment.		
Sumter County		Unclassifiable/Attainment.		
Talladega County		Unclassifiable/Attainment.		
Tallapoosa County		Unclassifiable/Attainment.		
Tuscaloosa County		Unclassifiable/Attainment.		
Walker County (remainder)		Unclassifiable/Attainment.		
Washington County		Unclassifiable/Attainment.		
Wilcox County		Unclassifiable/Attainment.		
Winston County		Unclassifiable/Attainment.		

[a] Includes Indian Country located in each county or area, except as otherwise specified.
[1] This date is 30 days after November 13, 2009, unless otherwise noted.

* * * * *

■ 3. Section 81.302 is amended as follows:

■ a. By removing the tables titled ''Alaska—$PM_{2.5}$ [24-hour NAAQS]''. and ''Alaska—$PM_{2.5}$ [24-hour NAAQS]''.

■ b. By adding three tables titled ''Alaska—1997 Annual $PM_{2.5}$ NAAQS (Primary and Secondary)'' and ''Alaska—1997 24-hour $PM_{2.5}$ NAAQS (Primary and Secondary)'' and ''Alaska—2006 24-hour $PM_{2.5}$ NAAQS (Primary and Secondary)'' before the table titled ''Alaska—NO_2 (1971 Annual Standard)''.

The additions read as follows:

§ 81.302 Alaska.

* * * * *

ALASKA—1997 ANNUAL $PM_{2.5}$ NAAQS

[Primary and secondary]

Designated area	Designation [a]		Classification	
	Date [1]	Type	Date	Type
AQCR 08 Cook Inlet Intrastate:				
Anchorage Borough		Unclassifiable/Attainment.		
Kenai Peninsula Borough		Unclassifiable/Attainment.		
Matanuska-Susitna Borough		Unclassifiable/Attainment.		
AQCR 09 Northern Alaska Intrastate:				
Denali Borough		Unclassifiable/Attainment.		
Fairbanks North Star Borough		Unclassifiable/Attainment.		
Nome Census Area		Unclassifiable/Attainment.		
North Slope Borough		Unclassifiable/Attainment.		
Northwest Arctic Borough		Unclassifiable/Attainment.		

ALASKA—1997 ANNUAL $PM_{2.5}$ NAAQS—Continued

[Primary and secondary]

Designated area	Designation [a]		Classification	
	Date [1]	Type	Date	Type
Southeast Fairbanks Census Area		Unclassifiable/Attainment.		
Yukon-Koyukuk Census Area		Unclassifiable/Attainment.		
AQCR 10 South Central Alaska Intrastate:				
Aleutians East Borough		Unclassifiable/Attainment.		
Aleutians West Census Area		Unclassifiable/Attainment.		
Bethel Census Area		Unclassifiable/Attainment.		
Bristol Bay Borough		Unclassifiable/Attainment.		
Dillingham Census Area		Unclassifiable/Attainment.		
Kodiak Island Borough		Unclassifiable/Attainment.		
Lake and Peninsula Borough		Unclassifiable/Attainment.		
Valdez-Cordova Census Area		Unclassifiable/Attainment.		
Wade Hampton Census Area		Unclassifiable/Attainment.		
AQCR 11 Southeastern Alaska Intrastate:				
Haines Borough		Unclassifiable/Attainment.		
Juneau Borough		Unclassifiable/Attainment.		
Ketchikan Gateway Borough		Unclassifiable/Attainment.		
Prince of Wales-Outer Ketchikan Census		Unclassifiable/Attainment.		
Sitka Borough		Unclassifiable/Attainment.		
Skagway-Hoonah-Angoon Census Area		Unclassifiable/Attainment.		
Wrangell-Petersburg Census Area		Unclassifiable/Attainment.		
Yakutat Borough		Unclassifiable/Attainment.		

[a] Includes Indian Country located in each county or area, except as otherwise specified.
[1] This date is 90 days after January 5, 2005, unless otherwise noted.

ALASKA—1997 24-HOUR $PM_{2.5}$ NAAQS

[Primary and secondary]

Designated area	Designation [a]		Classification	
	Date [1]	Type	Date	Type
Fairbanks, AK:				
AQCR 09 Northern Alaska Intrastate:				
Fairbanks North Star Borough (part)		Unclassifiable/Attainment.		
The following townships and ranges:—MTRS F001N001—All Sections; —MTRS F001N001E—Sections 2–11, 14–23, 26–34; —MTRS F001N002—Sections 1–5, 8–17, 20–29, 32–36; —MTRS F001S001E—Sections 1, 3–30, 32–36; —MTRS F001S001W—Sections 1–30; —MTRS F001S002E—Sections 6–8, 17–20, 29–36; —MTRS F001S002W—Sections 1–5, 8–17, 20–29, 32–33; —MTRS F001S003E—Sections 31–32; —MTRS F002N001E—Sections 31–35; —MTRS F002N001—Sections 28, 31–36; —MTRS F002N002—Sections 32–33, 36; —MTRS F002S001E—Sections 1–2; —MTRS F002S002E—Sections 1–17, 21–24; —MTRS F002S003E—Sections 5–8, 18.				
Rest of State:				
AQCR 08 Cook Inlet Intrastate:				
Anchorage Borough		Unclassifiable/Attainment.		
Kenai Peninsula Borough		Unclassifiable/Attainment.		
Matanuska-Susitna Borough		Unclassifiable/Attainment.		
AQCR 09 Northern Alaska Intrastate:				
Denali Borough		Unclassifiable/Attainment.		
Fairbanks North Star Borough (remainder)		Unclassifiable/Attainment.		
Nome Census Area		Unclassifiable/Attainment.		
North Slope Borough		Unclassifiable/Attainment.		
Northwest Arctic Borough		Unclassifiable/Attainment.		
Southeast Fairbanks Census Area		Unclassifiable/Attainment.		
Yukon-Koyukuk Census Area		Unclassifiable/Attainment.		
AQCR 10 South Central Alaska Intrastate:				
Aleutians East Borough		Unclassifiable/Attainment.		
Aleutians West Census Area		Unclassifiable/Attainment.		
Bethel Census Area		Unclassifiable/Attainment.		
Bristol Bay Borough		Unclassifiable/Attainment.		
Dillingham Census Area		Unclassifiable/Attainment.		

ALASKA—1997 24-HOUR $PM_{2.5}$ NAAQS—Continued

[Primary and secondary]

Designated area	Designation [a]		Classification	
	Date [1]	Type	Date	Type
Kodiak Island Borough		Unclassifiable/Attainment.		
Lake and Peninsula Borough		Unclassifiable/Attainment.		
Valdez-Cordova Census Area		Unclassifiable/Attainment.		
Wade Hampton Census Area		Unclassifiable/Attainment.		
AQCR 11 Southeastern Alaska Intrastate:				
Haines Borough		Unclassifiable/Attainment.		
Juneau Borough		Unclassifiable/Attainment.		
Ketchikan Gateway Borough		Unclassifiable/Attainment.		
Prince of Wales-Outer Ketchikan Census		Unclassifiable/Attainment.		
Sitka Borough		Unclassifiable/Attainment.		
Skagway-Hoonah-Angoon Census Area		Unclassifiable/Attainment.		
Wrangell-Petersburg Census Area		Unclassifiable/Attainment.		
Yakutat Borough		Unclassifiable/Attainment.		

[a] Includes Indian Country located in each county or area, except as otherwise specified.
[1] This date is 90 days after January 5, 2005, unless otherwise noted.

ALASKA—2006 24-HOUR $PM_{2.5}$ NAAQS

[Primary and secondary]

Designated area	Designation[a]		Classification	
	Date [1]	Type	Date [2]	Type
Fairbanks, AK:				
AQCR 09 Northern Alaska Intrastate:				
Fairbanks North Star Borough (part)		Nonattainment		Moderate.
The following townships and ranges:—MTRS F001N001—All Sections; —MTRS F001N001E—Sections 2–11, 14–23, 26–34; —MTRS F001N002—Sections 1–5, 8–17, 20–29, 32–36; —MTRS F001S001E—Sections 1, 3–30, 32–36; —MTRS F001S001W—Sections 1–30; —MTRS F001S002E—Sections 6–8, 17–20, 29–36; —MTRS F001S002W—Sections 1–5, 8–17, 20–29, 32–33; —MTRS F001S003E—Sections 31–32; —MTRS F002N001E—Sections 31–35; —MTRS F002N001—Sections 28, 31–36; —MTRS F002N002—Sections 32–33, 36; —MTRS F002S001E—Sections 1–2; —MTRS F002S002E—Sections 1–17, 21–24; —MTRS F002S003E—Sections 5–8, 18.				
Rest of State:				
AQCR 08 Cook Inlet Intrastate:				
Anchorage Borough		Unclassifiable/Attainment.		
Kenai Peninsula Borough		Unclassifiable/Attainment.		
Matanuska-Susitna Borough		Unclassifiable/Attainment.		
AQCR 09 Northern Alaska Intrastate:				
Denali Borough		Unclassifiable/Attainment.		
Fairbanks North Star Borough (remainder)		Unclassifiable/Attainment.		
Nome Census Area		Unclassifiable/Attainment.		
North Slope Borough		Unclassifiable/Attainment.		
Northwest Arctic Borough		Unclassifiable/Attainment.		
Southeast Fairbanks Census Area		Unclassifiable/Attainment.		
Yukon-Koyukuk Census Area		Unclassifiable/Attainment.		
AQCR 10 South Central Alaska Intrastate:				
Aleutians East Borough		Unclassifiable/Attainment.		
Aleutians West Census Area		Unclassifiable/Attainment.		
Bethel Census Area		Unclassifiable/Attainment.		
Bristol Bay Borough		Unclassifiable/Attainment.		
Dillingham Census Area		Unclassifiable/Attainment.		
Kodiak Island Borough		Unclassifiable/Attainment.		
Lake and Peninsula Borough		Unclassifiable/Attainment.		
Valdez-Cordova Census Area		Unclassifiable/Attainment.		
Wade Hampton Census Area		Unclassifiable/Attainment.		
AQCR 11 Southeastern Alaska Intrastate:				
Haines Borough		Unclassifiable/Attainment.		
Juneau Borough		Unclassifiable/Attainment.		
Ketchikan Gateway Borough		Unclassifiable/Attainment.		

ALASKA—2006 24-HOUR $PM_{2.5}$ NAAQS—Continued

[Primary and secondary]

Designated area	Designation[a]		Classification	
	Date [1]	Type	Date [2]	Type
Prince of Wales-Outer Ketchikan Census		Unclassifiable/Attainment.		
Sitka Borough		Unclassifiable/Attainment.		
Skagway-Hoonah-Angoon Census Area		Unclassifiable/Attainment.		
Wrangell-Petersburg Census Area		Unclassifiable/Attainment.		
Yakutat Borough		Unclassifiable/Attainment.		

[a] Includes Indian Country located in each county or area, except as otherwise specified.
[1] This date is 30 days after November 13, 2009, unless otherwise noted.
[2] This date is July 2, 2014, unless otherwise noted.

* * * * *

■ 4. Section 81.303 is amended as follows:

■ a. By removing the tables titled ''Arizona—$PM_{2.5}$ (Annual NAAQS)'' and ''Arizona—$PM_{2.5}$ [24-hour NAAQS]''.

■ b. By adding three tables titled ''Arizona—1997 Annual $PM_{2.5}$ NAAQS (Primary and Secondary)'' and ''Arizona—1997 24-hour $PM_{2.5}$ NAAQS (Primary and Secondary)'' and ''Arizona—2006 24-hour $PM_{2.5}$ NAAQS (Primary and Secondary)'' before the table titled ''Arizona—NO_2 (1971 Annual Standard)''.

The additions read as follows:

§ 81.303 Arizona.

* * * * *

ARIZONA—1997 ANNUAL $PM_{2.5}$ NAAQS

[Primary and secondary]

Designated area	Designation [a]		Classification	
	Date [1]	Type	Date	Type
Statewide:				
Apache County		Unclassifiable/Attainment.		
Cochise County		Unclassifiable/Attainment.		
Coconino County		Unclassifiable/Attainment.		
Gila County		Unclassifiable/Attainment.		
Graham County		Unclassifiable/Attainment.		
Greenlee County		Unclassifiable/Attainment.		
La Paz County		Unclassifiable/Attainment.		
Maricopa County		Unclassifiable/Attainment.		
Mohave County		Unclassifiable/Attainment.		
Navajo County		Unclassifiable/Attainment.		
Pima County		Unclassifiable/Attainment.		
Pinal County		Unclassifiable/Attainment.		
Santa Cruz County		Unclassifiable/Attainment.		
Yavapai County		Unclassifiable/Attainment.		
Yuma County		Unclassifiable/Attainment.		

[a] Includes Indian Country located in each county or area, except as otherwise specified.
[1] This date is 90 days after January 5, 2005, unless otherwise noted.

ARIZONA—1997 24-HOUR $PM_{2.5}$ NAAQS

[Primary and secondary]

Designated area	Designation [a]		Classification	
	Date [1]	Type	Date	Type
Nogales:				
Santa Cruz County (part)		Unclassifiable/Attainment.		
Nogales planning area bounded as follows: The portions of the following Townships which are within the State of Arizona and lie east of 111 longitude: T23S, R13E; T23S, R14E; T24S, R13E; T24S, R14E..				
West Central Pinal:				
Pinal County (part)		Unclassifiable/Attainment.		
1. Commencing at a point which is the intersection of the eastern line of Range 1 East, Gila and Salt River Baseline and Meridian, and the northern line of Township 4 South, which is the point of beginning:				

ARIZONA—1997 24-HOUR $PM_{2.5}$ NAAQS—Continued

[Primary and secondary]

Designated area	Designation [a]		Classification	
	Date [1]	Type	Date	Type
2. Thence, proceed easterly along the northern line of Township 4 South to a point where the northern line of Township 4 South intersects the eastern line of Range 4 East;				
3. Thence, southerly along the eastern line of Range 4 East to a point where the eastern line of Range 4 East intersects the northern line of Township 6 South;				
4. Thence, easterly along the northern line of Township 6 South to a point where the northern line of Township 6 South intersects the eastern line of Range 4 East;				
5. Thence, southerly along the eastern line of Range 4 East to a point where the eastern line of Range 4 East intersects the southern line of Township 7 South;				
6. Thence, westerly along the southern line of Township 7 South to a point where the southern line of Township 7 South intersects the quarter section line common to the southwestern southwest quarter section and the southeastern southwest quarter section of section 34, Range 3 East and Township 7 South;				
7. Thence, northerly along the quarter section line common to the southwestern southwest quarter section and the southeastern southwest quarter section of sections 34, 27, 22, and 15, Range 3 East and Township 7 South, to a point where the quarter section line common to the southwestern southwest quarter section and the southeastern southwest quarter section of sections 34, 27, 22, and 15, Range 3 East and Township 7 South, intersects the northern line of section 15, Range 3 East and Township 7 South;				
8. Thence, westerly along the northern line of sections 15, 16, 17, and 18, Range 3 East and Township 7 South, and the northern line of sections 13, 14, 15, 16, 17, and 18, Range 2 East and Township 7 South, to a point where the northern line of sections 15, 16, 17, and 18, Range 3 East and Township 7 South, and the northern line of sections 13, 14, 15, 16, 17, and 18, Range 2 East and Township 7 South, intersect the eastern line of Range 1 East, which is the common boundary between Maricopa and Pinal Counties, as described in Arizona Revised Statutes sections 11–109 and 11–113;				
9. Thence, northerly along the eastern line of Range 1 East to the point of beginning which is the point where the eastern line of Range 1 East intersects the northern line of Township 4 South;				
10. Except that portion of the area defined by paragraphs 1 through 9 above that lies in Indian country.				
Rest of State:				
Apache County		Unclassifiable/Attainment.		
Cochise County		Unclassifiable/Attainment.		
Coconino County		Unclassifiable/Attainment.		
Gila County		Unclassifiable/Attainment.		
Graham County		Unclassifiable/Attainment.		
Greenlee County		Unclassifiable/Attainment.		
La Paz County		Unclassifiable/Attainment.		
Maricopa County (remainder, excluding lands of the Gila River Indian Community).		Unclassifiable/Attainment.		
Mohave County		Unclassifiable/Attainment.		
Navajo County		Unclassifiable/Attainment.		
Pima County		Unclassifiable/Attainment.		

ARIZONA—1997 24-HOUR $PM_{2.5}$ NAAQS—Continued

[Primary and secondary]

Designated area	Designation [a]		Classification	
	Date [1]	Type	Date	Type
Pinal County (remainder, excluding lands of the Gila River Indian Community and Ak-Chin Indian Community).	.....	Unclassifiable/Attainment.		
Santa Cruz County (remainder)	.....	Unclassifiable/Attainment.		
Yavapai County	.....	Unclassifiable/Attainment.		
Yuma County	.....	Unclassifiable/Attainment.		
Lands of the Gila River Indian Community in Pinal County and Maricopa County.	.....	Unclassifiable/Attainment.		
Lands of the Ak-Chin Indian Community in Pinal County	.....	Unclassifiable/Attainment.		

[a] Includes Indian Country located in each county or area, except as otherwise specified.
[1] This date is 90 days after January 5, 2005, unless otherwise noted.

ARIZONA—2006 24-HOUR $PM_{2.5}$ NAAQS

[Primary and secondary]

Designated area	Designation [a]		Classification	
	Date [1]	Type	Date [2]	Type
Nogales:				
Santa Cruz County (part)	.....	Nonattainment	.....	Moderate.
Nogales planning area bounded as follows: The portions of the following Townships which are within the State of Arizona and lie east of 111 longitude: T23S, R13E; T23S, R14E; T24S, R13E; T24S, R14E.				
West Central Pinal:				
Pinal County (part)	3/7/11	Nonattainment	.....	Moderate.
1. Commencing at a point which is the intersection of the eastern line of Range 1 East, Gila and Salt River Baseline and Meridian, and the northern line of Township 4 South, which is the point of beginning:				
2. Thence, proceed easterly along the northern line of Township 4 South to a point where the northern line of Township 4 South intersects the eastern line of Range 4 East;				
3. Thence, southerly along the eastern line of Range 4 East to a point where the eastern line of Range 4 East intersects the northern line of Township 6 South;				
4. Thence, easterly along the northern line of Township 6 South to a point where the northern line of Township 6 South intersects the eastern line of Range 4 East;				
5. Thence, southerly along the eastern line of Range 4 East to a point where the eastern line of Range 4 East intersects the southern line of Township 7 South;				
6. Thence, westerly along the southern line of Township 7 South to a point where the southern line of Township 7 South intersects the quarter section line common to the southwestern southwest quarter section and the southeastern southwest quarter section of section 34, Range 3 East and Township 7 South;				
7. Thence, northerly along the quarter section line common to the southwestern southwest quarter section and the southeastern southwest quarter section of sections 34, 27, 22, and 15, Range 3 East and Township 7 South, to a point where the quarter section line common to the southwestern southwest quarter section and the southeastern southwest quarter section of sections 34, 27, 22, and 15, Range 3 East and Township 7 South, intersects the northern line of section 15, Range 3 East and Township 7 South;				

ARIZONA—2006 24-HOUR $PM_{2.5}$ NAAQS—Continued

[Primary and secondary]

Designated area	Designation [a]		Classification	
	Date [1]	Type	Date [2]	Type
8. Thence, westerly along the northern line of sections 15, 16, 17, and 18, Range 3 East and Township 7 South, and the northern line of sections 13, 14, 15, 16, 17, and 18, Range 2 East and Township 7 South, to a point where the northern line of sections 15, 16, 17, and 18, Range 3 East and Township 7 South, and the northern line of sections 13, 14, 15, 16, 17, and 18, Range 2 East and Township 7 South, intersect the eastern line of Range 1 East, which is the common boundary between Maricopa and Pinal Counties, as described in Arizona Revised Statutes sections 11–109 and 11–113;				
9. Thence, northerly along the eastern line of Range 1 East to the point of beginning which is the point where the eastern line of Range 1 East intersects the northern line of Township 4 South;				
10. Except that portion of the area defined by paragraphs 1 through 9 above that lies in Indian country.				
Rest of State:				
Apache County		Unclassifiable/Attainment		
Cochise County	3/7/11	Unclassifiable/Attainment		
Coconino County		Unclassifiable/Attainment		
Gila County	3/7/11	Unclassifiable/Attainment		
Graham County	3/7/11	Unclassifiable/Attainment		
Greenlee County		Unclassifiable/Attainment		
La Paz County	3/7/11	Unclassifiable/Attainment		
Maricopa County (remainder, excluding lands of the Gila River Indian Community).		Unclassifiable/Attainment		
Mohave County		Unclassifiable/Attainment		
Navajo County		Unclassifiable/Attainment		
Pima County	3/7/11	Unclassifiable/Attainment		
Pinal County (remainder, excluding lands of the Gila River Indian Community and Ak-Chin Indian Community).	3/7/11	Unclassifiable/Attainment		
Santa Cruz County (remainder)		Unclassifiable/Attainment		
Yavapai County	3/7/11	Unclassifiable/Attainment		
Yuma County	3/7/11	Unclassifiable/Attainment		
Lands of the Gila River Indian Community in Pinal County and Maricopa County.	11/26/12	Unclassifiable/Attainment		
Lands of the Ak-Chin Indian Community in Pinal County	11/26/12	Unclassifiable/Attainment		

[a] Includes Indian Country located in each county or area, except as otherwise specified.
[1] This date is 30 days after November 13, 2009, unless otherwise noted.
[2] This date is July 2, 2014, unless otherwise noted.

* * * * *

■ 5. Section 81.304 is amended as follows:

■ a. By removing the tables titled ''Arkansas—$PM_{2.5}$ (Annual NAAQS)'' and ''Arkansas—$PM_{2.5}$ [24-hour NAAQS]''.

■ b. By adding three tables titled ''Arkansas—1997 Annual $PM_{2.5}$ NAAQS (Primary and Secondary)'' and ''Arkansas—1997 24-hour $PM_{2.5}$ NAAQS (Primary and Secondary)'' and ''Arkansas—2006 24-hour $PM_{2.5}$ NAAQS (Primary and Secondary)'' before the table titled ''Arkansas—NO_2 (1971 Annual Standard)''

The additions read as follows:

§ 81.304 Arkansas.

* * * * *

ARKANSAS—1997 ANNUAL $PM_{2.5}$ NAAQS

[Primary and secondary]

Designated area	Designation [a]		Classification	
	Date [1]	Type	Date	Type
AQCR 016 Central Arkansas Intrastate:				
Chicot County		Unclassifiable/Attainment		
Clark County		Unclassifiable/Attainment		
Cleveland County		Unclassifiable/Attainment		
Conway County		Unclassifiable/Attainment.		

ARKANSAS—1997 ANNUAL $PM_{2.5}$ NAAQS—Continued

[Primary and secondary]

Designated area	Designation [a]		Classification	
	Date [1]	Type	Date	Type
Dallas County		Unclassifiable/Attainment		
Desha County		Unclassifiable/Attainment		
Drew County		Unclassifiable/Attainment		
Faulkner County		Unclassifiable/Attainment		
Garland County		Unclassifiable/Attainment		
Grant County		Unclassifiable/Attainment		
Hot Spring County		Unclassifiable/Attainment		
Jefferson County		Unclassifiable/Attainment		
Lincoln County		Unclassifiable/Attainment		
Lonoke County		Unclassifiable/Attainment		
Perry County		Unclassifiable/Attainment		
Pope County		Unclassifiable/Attainment		
Pulaski County		Unclassifiable/Attainment		
Saline County		Unclassifiable/Attainment		
Yell County		Unclassifiable/Attainment		
AQCR 017 Metropolitan Fort Smith Interstate:				
Benton County		Unclassifiable/Attainment		
Crawford County		Unclassifiable/Attainment		
Sebastian County		Unclassifiable/Attainment		
Washington County		Unclassifiable/Attainment		
AQCR 019 Monroe-El Dorado Interstate:				
Ashley County		Unclassifiable/Attainment		
Bradley County		Unclassifiable/Attainment		
Calhoun County		Unclassifiable/Attainment		
Nevada County		Unclassifiable/Attainment		
Ouachita County		Unclassifiable/Attainment		
Union County		Unclassifiable/Attainment		
AQCR 020 Northeast Arkansas Intrastate:				
Arkansas County		Unclassifiable/Attainment		
Clay County		Unclassifiable/Attainment		
Craighead County		Unclassifiable/Attainment		
Cross County		Unclassifiable/Attainment		
Greene County		Unclassifiable/Attainment		
Independence County		Unclassifiable/Attainment		
Jackson County		Unclassifiable/Attainment		
Lawrence County		Unclassifiable/Attainment		
Lee County		Unclassifiable/Attainment		
Mississippi County		Unclassifiable/Attainment		
Monroe County		Unclassifiable/Attainment		
Phillips County		Unclassifiable/Attainment		
Poinsett County		Unclassifiable/Attainment		
Prairie County		Unclassifiable/Attainment		
Randolph County		Unclassifiable/Attainment		
St. Francis County		Unclassifiable/Attainment		
Sharp County		Unclassifiable/Attainment		
White County		Unclassifiable/Attainment		
Woodruff County		Unclassifiable/Attainment		
AQCR 021 Northwest Arkansas Intrastate:				
Baxter County		Unclassifiable/Attainment		
Boone County		Unclassifiable/Attainment		
Carroll County		Unclassifiable/Attainment		
Cleburne County		Unclassifiable/Attainment		
Franklin County		Unclassifiable/Attainment		
Fulton County		Unclassifiable/Attainment		
Izard County		Unclassifiable/Attainment		
Johnson County		Unclassifiable/Attainment		
Logan County		Unclassifiable/Attainment		
Madison County		Unclassifiable/Attainment		
Marion County		Unclassifiable/Attainment		
Montgomery County		Unclassifiable/Attainment		
Newton County		Unclassifiable/Attainment		
Pike County		Unclassifiable/Attainment		
Polk County		Unclassifiable/Attainment		
Scott County		Unclassifiable/Attainment		
Searcy County		Unclassifiable/Attainment		
Stone County		Unclassifiable/Attainment		
Van Buren County		Unclassifiable/Attainment		
AQCR 022 Shreveport-Texarkana-Tyler Interstate:				
Columbia County		Unclassifiable/Attainment		

ARKANSAS—1997 ANNUAL $PM_{2.5}$ NAAQS—Continued

[Primary and secondary]

Designated area	Designation [a]		Classification	
	Date [1]	Type	Date	Type
Hempstead County		Unclassifiable/Attainment		
Howard County		Unclassifiable/Attainment		
Lafayette County		Unclassifiable/Attainment		
Little River County		Unclassifiable/Attainment		
Miller County		Unclassifiable/Attainment		
Sevier County		Unclassifiable/Attainment		
Memphis, TN–AR: (AQCR 018 Metropolitan Memphis Interstate):				
Crittenden County		Unclassifiable/Attainment		

[a] Includes Indian Country located in each county or area, except as otherwise specified.
[1] This date is 90 days after January 5, 2005, unless otherwise noted.

ARKANSAS—1997 24-HOUR $PM_{2.5}$ NAAQS

[Primary and secondary]

Designated area	Designation [a]		Classification	
	Date [1]	Type	Date	Type
AQCR 016 Central Arkansas Intrastate:				
Chicot County		Unclassifiable/Attainment		
Clark County		Unclassifiable/Attainment		
Cleveland County		Unclassifiable/Attainment		
Conway County		Unclassifiable/Attainment		
Dallas County		Unclassifiable/Attainment		
Desha County		Unclassifiable/Attainment		
Drew County		Unclassifiable/Attainment		
Faulkner County		Unclassifiable/Attainment		
Garland County		Unclassifiable/Attainment		
Grant County		Unclassifiable/Attainment		
Hot Spring County		Unclassifiable/Attainment		
Jefferson County		Unclassifiable/Attainment		
Lincoln County		Unclassifiable/Attainment		
Lonoke County		Unclassifiable/Attainment		
Perry County		Unclassifiable/Attainment		
Pope County		Unclassifiable/Attainment		
Pulaski County		Unclassifiable/Attainment		
Saline County		Unclassifiable/Attainment		
Yell County		Unclassifiable/Attainment		
AQCR 017 Metropolitan Fort Smith Interstate:				
Benton County		Unclassifiable/Attainment		
Crawford County		Unclassifiable/Attainment		
Sebastian County		Unclassifiable/Attainment		
Washington County		Unclassifiable/Attainment		
AQCR 019 Monroe-El Dorado Interstate:				
Ashley County		Unclassifiable/Attainment		
Bradley County		Unclassifiable/Attainment		
Calhoun County		Unclassifiable/Attainment		
Nevada County		Unclassifiable/Attainment		
Ouachita County		Unclassifiable/Attainment		
Union County		Unclassifiable/Attainment		
AQCR 020 Northeast Arkansas Intrastate:				
Arkansas County		Unclassifiable/Attainment		
Clay County		Unclassifiable/Attainment		
Craighead County		Unclassifiable/Attainment		
Cross County		Unclassifiable/Attainment		
Greene County		Unclassifiable/Attainment		
Independence County		Unclassifiable/Attainment		
Jackson County		Unclassifiable/Attainment		
Lawrence County		Unclassifiable/Attainment		
Lee County		Unclassifiable/Attainment		
Mississippi County		Unclassifiable/Attainment		
Monroe County		Unclassifiable/Attainment		
Phillips County		Unclassifiable/Attainment		
Poinsett County		Unclassifiable/Attainment		
Prairie County		Unclassifiable/Attainment		
Randolph County		Unclassifiable/Attainment		
St. Francis County		Unclassifiable/Attainment		

ARKANSAS—1997 24-HOUR $PM_{2.5}$ NAAQS—Continued

[Primary and secondary]

Designated area	Designation [a]		Classification	
	Date [1]	Type	Date	Type
Sharp County		Unclassifiable/Attainment		
White County		Unclassifiable/Attainment		
Woodruff County		Unclassifiable/Attainment		
AQCR 021 Northwest Arkansas Intrastate:				
Baxter County		Unclassifiable/Attainment		
Boone County		Unclassifiable/Attainment		
Carroll County		Unclassifiable/Attainment		
Cleburne County		Unclassifiable/Attainment		
Franklin County		Unclassifiable/Attainment		
Fulton County		Unclassifiable/Attainment		
Izard County		Unclassifiable/Attainment		
Johnson County		Unclassifiable/Attainment		
Logan County		Unclassifiable/Attainment		
Madison County		Unclassifiable/Attainment		
Marion County		Unclassifiable/Attainment		
Montgomery County		Unclassifiable/Attainment		
Newton County		Unclassifiable/Attainment		
Pike County		Unclassifiable/Attainment		
Polk County		Unclassifiable/Attainment		
Scott County		Unclassifiable/Attainment		
Searcy County		Unclassifiable/Attainment		
Stone County		Unclassifiable/Attainment		
Van Buren County		Unclassifiable/Attainment		
AQCR 022 Shreveport-Texarkana-Tyler Interstate:				
Columbia County		Unclassifiable/Attainment		
Hempstead County		Unclassifiable/Attainment		
Howard County		Unclassifiable/Attainment		
Lafayette County		Unclassifiable/Attainment		
Little River County		Unclassifiable/Attainment		
Miller County		Unclassifiable/Attainment		
Sevier County		Unclassifiable/Attainment		
Memphis, TN–AR: (AQCR 018 Metropolitan Memphis Interstate):				
Crittenden County		Unclassifiable/Attainment		

[a] Includes Indian Country located in each county or area, except as otherwise specified.
[1] This date is 90 days after January 5, 2005, unless otherwise noted.

ARKANSAS—2006 24-HOUR $PM_{2.5}$ NAAQS

[Primary and secondary]

Designated area	Designation [a]		Classification	
	Date [1]	Type	Date	Type
AQCR 016 Central Arkansas Intrastate:				
Chicot County		Unclassifiable/Attainment.		
Clark County		Unclassifiable/Attainment.		
Cleveland County		Unclassifiable/Attainment.		
Conway County		Unclassifiable/Attainment.		
Dallas County		Unclassifiable/Attainment.		
Desha County		Unclassifiable/Attainment.		
Drew County		Unclassifiable/Attainment.		
Faulkner County		Unclassifiable/Attainment.		
Garland County		Unclassifiable/Attainment.		
Grant County		Unclassifiable/Attainment.		
Hot Spring County		Unclassifiable/Attainment.		
Jefferson County		Unclassifiable/Attainment.		
Lincoln County		Unclassifiable/Attainment.		
Lonoke County		Unclassifiable/Attainment.		
Perry County		Unclassifiable/Attainment.		
Pope County		Unclassifiable/Attainment.		
Pulaski County		Unclassifiable/Attainment.		
Saline County		Unclassifiable/Attainment.		
Yell County		Unclassifiable/Attainment.		
AQCR 017 Metropolitan Fort Smith Interstate:				
Benton County		Unclassifiable/Attainment.		
Crawford County		Unclassifiable/Attainment.		
Sebastian County		Unclassifiable/Attainment.		

ARKANSAS—2006 24-HOUR $PM_{2.5}$ NAAQS—Continued

[Primary and secondary]

Designated area	Designation [a]		Classification	
	Date [1]	Type	Date	Type
Washington County		Unclassifiable/Attainment.		
AQCR 019 Monroe-El Dorado Interstate:				
Ashley County		Unclassifiable/Attainment.		
Bradley County		Unclassifiable/Attainment.		
Calhoun County		Unclassifiable/Attainment.		
Nevada County		Unclassifiable/Attainment.		
Ouachita County		Unclassifiable/Attainment.		
Union County		Unclassifiable/Attainment.		
AQCR 020 Northeast Arkansas Intrastate:				
Arkansas County		Unclassifiable/Attainment.		
Clay County		Unclassifiable/Attainment.		
Craighead County		Unclassifiable/Attainment.		
Cross County		Unclassifiable/Attainment.		
Greene County		Unclassifiable/Attainment.		
Independence County		Unclassifiable/Attainment.		
Jackson County		Unclassifiable/Attainment.		
Lawrence County		Unclassifiable/Attainment.		
Lee County		Unclassifiable/Attainment.		
Mississippi County		Unclassifiable/Attainment.		
Monroe County		Unclassifiable/Attainment.		
Phillips County		Unclassifiable/Attainment.		
Poinsett County		Unclassifiable/Attainment.		
Prairie County		Unclassifiable/Attainment.		
Randolph County		Unclassifiable/Attainment.		
St. Francis County		Unclassifiable/Attainment.		
Sharp County		Unclassifiable/Attainment.		
White County		Unclassifiable/Attainment.		
Woodruff County		Unclassifiable/Attainment.		
AQCR 021 Northwest Arkansas Intrastate:				
Baxter County		Unclassifiable/Attainment.		
Boone County		Unclassifiable/Attainment.		
Carroll County		Unclassifiable/Attainment.		
Cleburne County		Unclassifiable/Attainment.		
Franklin County		Unclassifiable/Attainment.		
Fulton County		Unclassifiable/Attainment.		
Izard County		Unclassifiable/Attainment.		
Johnson County		Unclassifiable/Attainment.		
Logan County		Unclassifiable/Attainment.		
Madison County		Unclassifiable/Attainment.		
Marion County		Unclassifiable/Attainment.		
Montgomery County		Unclassifiable/Attainment.		
Newton County		Unclassifiable/Attainment.		
Pike County		Unclassifiable/Attainment.		
Polk County		Unclassifiable/Attainment.		
Scott County		Unclassifiable/Attainment.		
Searcy County		Unclassifiable/Attainment.		
Stone County		Unclassifiable/Attainment.		
Van Buren County		Unclassifiable/Attainment.		
AQCR 022 Shreveport-Texarkana-Tyler Interstate:				
Columbia County		Unclassifiable/Attainment.		
Hempstead County		Unclassifiable/Attainment.		
Howard County		Unclassifiable/Attainment.		
Lafayette County		Unclassifiable/Attainment.		
Little River County		Unclassifiable/Attainment.		
Miller County		Unclassifiable/Attainment.		
Sevier County		Unclassifiable/Attainment.		
Memphis, TN–AR: (AQCR 018 Metropolitan Memphis Interstate):.				
Crittenden County		Unclassifiable/Attainment.		

[a] Includes Indian Country located in each county or area, except as otherwise specified.
[1] This date is 30 days after November 13, 2009, unless otherwise noted.

* * * * *

■ 6. Section 81.305 is amended as follows:

■ a. By removing the tables titled ''California—$PM_{2.5}$ (Annual NAAQS)'' and ''California—$PM_{2.5}$ [24-hour NAAQS]''.

■ b. By adding three tables titled ''California—1997 Annual $PM_{2.5}$ NAAQS (Primary and Secondary)'' and ''California—1997 24-hour $PM_{2.5}$

NAAQS (Primary and Secondary)'' and ''California—2006 24-hour $PM_{2.5}$ NAAQS (Primary and Secondary)'' before the table titled ''California—NO_2 (1971 Annual Standard)'' .

The additions read as follows:

§ 81.305 California.

* * * * *

CALIFORNIA—1997 ANNUAL $PM_{2.5}$ NAAQS
[Primary and secondary]

Designated area	Designation [a]		Classification	
	Date [1]	Type	Date [2]	Type
Los Angeles-South Coast Air Basin, CA:				
Los Angeles County (part)		Nonattainment		Moderate
That portion of Los Angeles County which lies south and west of a line described as follows: Beginning at the Los Angeles-San Bernardino County boundary and running west along the Township line common to Township 3 North and Township 2 North, San Bernardino Base and Meridian; then north along the range line common to Range 8 West and Range 9 West; then west along the Township line common to Township 4 North and Township 3 North; then north along the range line common to Range 12 West and Range 13 West to the southeast corner of Section 12, Township 5 North and Range 13 West; then west along the south boundaries of Sections 12, 11, 10, 9, 8, and 7, Township 5 North and Range 13 West to the boundary of the Angeles National Forest which is collinear with the range line common to Range 13 West and Range 14 West; then north and west along the Angeles National Forest boundary to the point of intersection with the Township line common to Township 7 North and Township 6 North (point is at the northwest corner of Section 4 in Township 6 North and Range 14 West); then west along the Township line common to Township 7 North and Township 6 North; then north along the range line common to Range 15 West and Range 16 West to the southeast corner of Section 13, Township 7 North and Range 16 West; then along the south boundaries of Sections 13, 14, 15, 16, 17, and 18, Township 7 North and Range 16 West; then north along the range line common to Range 16 West and Range 17 West to the north boundary of the Angeles National Forest (collinear with the Township line common to Township 8 North and Township 7 North); then west and north along the Angeles National Forest boundary to the point of intersection with the south boundary of the Rancho La Liebre Land Grant; then west and north along this land grant boundary to the Los Angeles-Kern County boundary.				
Orange County		Nonattainment		Moderate.
Riverside County (part)		Nonattainment		Moderate.
That portion of Riverside County which lies to the west of a line described as follows: Beginning at the Riverside-San Diego County boundary and running north along the range line common to Range 4 East and Range 3 East, San Bernardino Base and Meridian; then east along the Township line common to Township 8 South and Township 7 South; then north along the range line common to Range 5 East and Range 4 East; then west along the Township line common to Township 6 South and Township 7 South to the southwest corner of Section 34, Township 6 South, Range 4 East; then north along the west boundaries of Sections 34, 27, 22, 15, 10, and 3, Township 6 South, Range 4 East; then west along the Township line common to Township 5 South and Township 6 South; then north along the range line common to Range 4 East and Range 3 East; then west along the south boundaries of Sections 13, 14, 15, 16, 17, and 18, Township 5 South, Range 3 East; then north along the range line common to Range 2 East and Range 3 East; to the Riverside-San Bernardino County line.				
San Bernardino County (part)		Nonattainment		Moderate.
That portion of San Bernardino County which lies south and west of a line described as follows: Beginning at the San Bernardino-Riverside County boundary and running north along the range line common to Range 3 East and Range 2 East, San Bernardino Base and Meridian; then west along the Township line common to Township 3 North and Township 2 North to the San Bernardino-Los Angeles County boundary.				
San Diego, CA:				
San Diego County		Unclassifiable/Attainment		
San Joaquin Valley, CA:				
Fresno County		Nonattainment		Moderate.
Kern County (part)		Nonattainment		Moderate.
That portion of Kern County which lies west and north of a line described as follows: Beginning at the Kern-Los Angeles County boundary and running north and east along the northwest boundary of the Rancho La Libre Land Grant to the point of intersection with the range line common to R. 16 W. and R. 17 W., San Bernardino Base and Meridian; north along the range line to the point of intersection with the Rancho El Tejon Land Grant boundary; then southeast, northeast, and northwest along the boundary of the Rancho El Tejon Land Grant to the northwest corner of S. 3, T. 11 N., R. 17 W.; then west 1.2 miles; then north to the Rancho El Tejon Land Grant boundary; then northwest along the Rancho El Tejon line to the southeast corner of S. 34, T. 32 S., R. 30 E., Mount Diablo Base and Meridian; then north to the northwest corner of S. 35, T. 31 S., R. 30 E.; then northeast along the boundary of the Rancho El Tejon Land Grant to the southwest corner of S. 18, T. 31 S., R. 31 E.; then east to the southeast corner of S. 13, T. 31 S., R. 31 E.; then north along the range line common to R. 31 E. and R. 32 E., Mount Diablo Base and Meridian, to the northwest corner of S. 6, T. 29 S., R. 32 E.; then east to the southwest corner of S. 31, T. 28 S., R. 32 E.; then north along the range line common to R. 31 E. and R. 32 E. to the northwest corner of S. 6, T. 28 S., R. 32 E., then west to the southeast corner of S. 36, T. 27 S., R. 31 E., then north along the range line common to R. 31 E. and R. 32 E. to the Kern-Tulare County boundary.				
Kings County		Nonattainment		Moderate.
Madera County		Nonattainment		Moderate.
Merced County		Nonattainment		Moderate.
San Joaquin County		Nonattainment		Moderate.
Stanislaus County		Nonattainment		Moderate.
Tulare County		Nonattainment		Moderate.
North Coast Air Basin:				
Del Norte County		Unclassifiable/Attainment≤.		
Humboldt County		Unclassifiable/Attainment.		

CALIFORNIA—1997 ANNUAL $PM_{2.5}$ NAAQS—Continued
[Primary and secondary]

Designated area	Designation [a]		Classification	
	Date [1]	Type	Date [2]	Type
Mendocino County		Unclassifiable/Attainment.		
Sonoma County (part)		Unclassifiable/Attainment.		
That portion of Sonoma county which lies north and west of a line described as follows: Beginning at the south-easterly corner of the Rancho Estero Americano, being on the boundary line between Marin and Sonoma Counties, California; thence running northerly along the easterly boundary line of said Rancho Estero Americano to the northeasterly corner thereof, being an angle corner in the westerly boundary line of Rancho Canada de Jonive, thence running along said boundary of Rancho Canada de Jonive westerly; northerly and easterly to its intersection with the easterly line of Graton Road; thence running along the easterly and southerly line of Graton Road northerly and easterly to its intersection with the easterly line of Sullivan Road; thence running northerly along said easterly line of Sullivan Road to the southerly line of Green Valley Road; thence running easterly along the said southerly line of Green Valley Road and easterly along the southerly line of State Highway 116, to the westerly and northerly line of Vine Hill Road; thence running along the westerly and northerly line of Vine Hill Road, northerly and easterly to its intersection with the westerly line of Laguna Road; thence running northerly along the westerly line of Laguna Road and the northerly projection thereof to the northerly line of Trenton Road; thence running westerly along the northerly line of said Trenton Road to the easterly line of Trenton-Healdsburg Road to the easterly line of Eastside Road: thence running northerly along said easterly line of Eastside Road to its intersection with the southerly line of Rancho Sotoyome; thence running easterly along said southerly line of Rancho Sotoyome to its intersection with the Township line common to Townships 8 and 9 north, Mt. Diablo Base and Meridian; thence running easterly along said Township line to its intersection with the boundary line between Sonoma and Napa Counties, State of California.				
Trinity County	3/7/11	Unclassifiable/Attainment.		
Northeast Plateau Air Basin:				
Lassen County	3/7/11	Unclassifiable/Attainment.		
Modoc County	3/7/11	Unclassifiable/Attainment.		
Siskiyou County	3/7/11	Unclassifiable/Attainment.		
Lake County Air Basin:				
Lake County		Unclassifiable/Attainment.		
Upper Sacramento Valley Region:				
Butte County (remainder)	3/7/11	Unclassifiable/Attainment.		
Colusa County		Unclassifiable/Attainment.		
Glenn County		Unclassifiable/Attainment.		
Shasta County	3/7/11	Unclassifiable/Attainment.		
Sutter County (part)		Unclassifiable/Attainment.		
Tehama County	3/7/11	Unclassifiable/Attainment.		
Yuba County (remainder)	3/7/11	Unclassifiable/Attainment.		
Sacramento Metropolitan Region:				
El Dorado County (part)		Unclassifiable/Attainment.		
All portions of the county except that portion of El Dorado County within the drainage area naturally tributary to Lake Tahoe including said Lake.				
Placer County (part)		Unclassifiable/Attainment.		
All portions of the county except that portion of Placer County within the drainage area naturally tributary to Lake Tahoe including said Lake, plus that area in the vicinity of the head of the Truckee River described as follows: Commencing at the point common to the aforementioned drainage area crestline and the line common to Townships 15 North and 16 North, Mount Diablo Base and Meridian, and following that line in a westerly direction to the northwest corner of Section 3, Township 15 North, Range 16 East, Mount Diablo Base and Meridian, thence south along the west line of Sections 3 and 10, Township 15 North, Range 16 East, Mount Diablo Base and Meridian, to the intersection with the said drainage area crestline, thence following the said drainage area boundary in a southeasterly, then northeasterly direction to and along the Lake Tahoe Dam, thence following the said drainage area crestline in a northeasterly, then northwesterly direction to the point of beginning.				
Sacramento County		Unclassifiable/Attainment.		
Solano County (part)		Unclassifiable/Attainment.		
That portion of Solano County which lies north and east of a line described as follows: Beginning at the intersection of the westerly boundary of Solano County and the 1/4 section line running east and west through the center of Section 34; Township 6 North, Range 2 West, Mount Diablo Base and Meridian, thence east along said 1/4 section line to the east boundary of Section 36, Township 6 North, Range 2 West, thence south 1/2 mile and east 2.0 miles, more or less, along the west and south boundary of Los Putos Rancho to the northwest corner of Section 4, Township 5 North, Range 1 West, thence east along a line common to Township 5 North and Township 6 North to the northeast corner of Section 3, Township 5 North, Range 1 East, thence south along section lines to the southeast corner of Section 10, Township 3 North, Range 1 East, thence east along section lines to the south 1/4 corner of Section 8, Township 3 North, Range 2 East, thence east to the boundary between Solano and Sacramento Counties.				
Sutter County (part)		Unclassifiable/Attainment.		
That portion south of a line connecting the northern border of Yolo County to the southwest tip of Yuba County and continuing along the southern Yuba County border to Placer County.				
Yolo County		Unclassifiable/Attainment.		
Northern Mountain Counties:				
Nevada County		Unclassifiable/Attainment..		
Plumas County	3/7/11	Unclassifiable/Attainment.		
Sierra County	3/7/11	Unclassifiable/Attainment.		
Central Mountain Counties:				
Amador County		Unclassifiable/Attainment.		
Calaveras County		Unclassifiable/Attainment.		
Southern Mountain Counties:				

CALIFORNIA—1997 ANNUAL $PM_{2.5}$ NAAQS—Continued
[Primary and secondary]

Designated area	Designation [a]		Classification	
	Date [1]	Type	Date [2]	Type
Mariposa County		Unclassifiable/Attainment.		
Tuolumne County		Unclassifiable/Attainment.		
Lake Tahoe Air Basin:				
El Dorado County (part)		Unclassifiable/Attainment.		
That portion of El Dorado County within the drainage area naturally tributary to Lake Tahoe including said Lake..				
Placer County (part)		Unclassifiable/Attainment.		
That portion of Placer County within the drainage area naturally tributary to Lake Tahoe including said Lake, plus that area in the vicinity of the head of the Truckee River described as follows: commencing at the point common to the aforementioned drainage area crestline and the line common to Townships 15 North and 16 North, Mount Diablo Base and Meridian, and following that line in a westerly direction to the northwest corner of Section 3, Township 15 North, Range 16 East, Mount Diablo Base and Meridian, thence south along the west line of Sections 3 and 10, Township 15 North, Range 16 East, Mount Diablo Base and Meridian, to the intersection with the said drainage area crestline, thence following the said drainage area boundary in a southeasterly, then northeasterly direction to and along the Lake Tahoe Dam, thence following the said drainage area crestline in a northeasterly, then northwesterly direction to the point of beginning.				
San Francisco Bay Area Air Basin:				
Alameda County		Unclassifiable/Attainment.		
Contra Costa County		Unclassifiable/Attainment.		
Marin County		Unclassifiable/Attainment.		
Napa County		Unclassifiable/Attainment.		
San Francisco County		Unclassifiable/Attainment.		
San Mateo County		Unclassifiable/Attainment.		
Santa Clara County		Unclassifiable/Attainment.		
Solano County (part)		Unclassifiable/Attainment.		
Portion of Solano County which lies south and west of a line described as follows: Beginning at the intersection of the westerly boundary of Solano County and the 1/4 section line running east and west through the center of Section 34, T6N, R2W, M.D.B. & M., thence east along said 1/4 section line to the east boundary of Section 36, T6N, R2W, thence south 1/2 mile and east 2.0 miles, more or less, along the west and south boundary of Los Putos Rancho to the northwest corner of Section 4, T5N, R1W, thence east along a line common to T5N and T6N to the northeast corner of Section 3, T5N, R1E, thence south along section lines to the southeast corner of Section 10, T3N, R1E, thence east along section lines to the south 1/4 corner of Section 8, T3N, R2E, thence east to the boundary between Solano and Sacramento Counties.				
Sonoma County (part)		Unclassifiable/Attainment..		
That portion of Sonoma County which lies south and east of a line described as follows: Beginning at the southeasterly corner of the Rancho Estero Americano, being on the boundary line between Marin and Sonoma Counties, California; thence running northerly along the easterly boundary line of said Rancho Estero Americano to the northeasterly corner thereof, being an angle corner in the westerly boundary line of Rancho Canada de Jonive; thence running along said boundary of Rancho Canada de Jonive westerly, northerly and easterly to its intersection with the easterly line of Graton Road; thence running along the easterly and southerly line of Graton Road, northerly and easterly to its intersection with the easterly line of Sullivan Road; thence running northerly along said easterly line of Sullivan Road to the southerly line of Green Valley Road; thence running easterly along the said southerly line of Green Valley Road and easterly along the southerly line of State Highway 116, to the westerly line of Vine Hill Road; thence running along the westerly and northerly line of Vine Hill Road, northerly and easterly to its intersection with the westerly line of Laguna Road; thence running northerly along the westerly line of Laguna Road and the northerly projection thereof to the northerly line of Trenton Road; thence running westerly along the northerly line of said Trenton Road to the easterly line of Trenton-Healdsburg Road; thence running northerly along said easterly line of Trenton-Healdsburg Road to the easterly line of Eastside Road; thence running northerly along said easterly line of Eastside Road to its intersection with the southerly line of Rancho Sotoyome; thence running easterly along said southerly line of Rancho Sotoyome to its intersection with the Township line common to Townships 8 and 9 North, M.D.M.; thence running easterly along said township line to its intersection with the boundary line between Sonoma and Napa Counties.				
North Central Coast Air Basin:				
Monterey County		Unclassifiable/Attainment.		
San Benito County		Unclassifiable/Attainment.		
Santa Cruz County		Unclassifiable/Attainment.		
San Luis Obispo County:				
San Luis Obispo County		Unclassifiable/Attainment.		
Santa Barbara County:				
Santa Barbara County (part)		Unclassifiable/Attainment.		
Excluding San Miguel, Santa Rosa, Santa Cruz, and Santa Barbara Islands				
Santa Barbara County (part)		Unclassifiable/Attainment.		
San Miguel, Santa Rosa, Santa Cruz, and Santa Barbara Islands.				
Ventura County:				
Ventura County (part)		Unclassifiable/Attainment.		
Excluding Anacapa and San Nicolas Islands.				
Ventura County (part)		Unclassifiable/Attainment.		
Anacapa and San Nicolas Islands.				
Great Basin Valleys Air Basin:				
Alpine County		Unclassifiable/Attainment.		
Inyo County (part)		Unclassifiable/Attainment.		
That portion of Inyo County that lies outside Hydrologic Unit Number 18090205.				
Mono County		Unclassifiable/Attainment.		
Coso Junction:				
Inyo County (part)		Unclassifiable/Attainment.		

CALIFORNIA—1997 ANNUAL $PM_{2.5}$ NAAQS—Continued
[Primary and secondary]

Designated area	Designation [a]		Classification	
	Date [1]	Type	Date [2]	Type
That portion of Inyo County that lies inside Hydrologic Unit Number 18090205.				
Eastern Kern County:				
Kern County (part)		Unclassifiable/Attainment.		
That portion of Kern County (with the exception of that portion in Hydrologic Unit Number 18090205—the Indian Wells Valley) east and south of a line described as follows: Beginning at the Kern—Los Angeles County boundary and running north and east along the northwest boundary of the Rancho La Liebre Land Grant to the point of intersection with the range line common to Range 16 West and Range 17 West, San Bernardino Base and Meridian; north along the range line to the point of intersection with the Rancho El Tejon Land Grant boundary; then southeast, northeast, and northwest along the boundary of the Rancho El Tejon Grant to the northwest corner of Section 3, Township 11 North, Range 17 West; then west 1.2 miles; then north to the Rancho El Tejon Land Grant boundary; then northwest along the Rancho El Tejon line to the southeast corner of Section 34, Township 32 South, Range 30 East, Mount Diablo Base and Meridian; then north to the northwest corner of Section 35, Township 31 South, Range 30 East; then northeast along the boundary of the Rancho El Tejon Land Grant to the southwest corner of Section 18, Township 31 South, Range 31 East; then east to the southeast corner of Section 13, Township 31 South, Range 31 East; then north along the range line common to Range 31 East and Range 32 East, Mount Diablo Base and Meridian, to the northwest corner of Section 6, Township 29 South, Range 32 East; then east to the southwest corner of Section 31, Township 28 South, Range 32 East; then north along the range line common to Range 31 East and Range 32 East to the northwest corner of Section 6, Township 28 South, Range 32 East, then west to the southeast corner of Section 36, Township 27 South, Range 31 East, then north along the range line common to Range 31 East and Range 32 East to the Kern-Tulare County boundary				
Indian Wells Valley:				
Kern County (part)		Unclassifiable/Attainment.		
That portion of Kern County that lies inside Hydrologic Unit Number 18090205.				
Western Mojave Desert and Antelope Valley:				
Los Angeles County (part)		Unclassifiable/Attainment.		
That portion of Los Angeles County which lies north and east of a line described as follows: Beginning at the Los Angeles—San Bernardino County boundary and running west along the Township line common to Township 3 North and Township 2 North, San Bernardino Base and Meridian; then north along the range line common to Range 8 West and Range 9 West; then west along the Township line common to Township 4 North and Township 3 North; then north along the range line common to Range 12 West and Range 13 West to the southeast corner of Section 12, Township 5 North and Range 13 West; then west along the south boundaries of Sections 12, 11, 10, 9, 8, and 7, Township 5 North and Range 13 West to the boundary of the Angeles National Forest which is collinear with the range line common to Range 13 West and Range 14 West; then north and west along the Angeles National Forest boundary to the point of intersection with the Township line common to Township 7 North and Township 6 North (point is at the northwest corner of Section 4 in Township 6 North and Range 14 West); then west along the Township line common to Township 7 North and Township 6 North; then north along the range line common to Range 15 West and Range 16 West to the southeast corner of Section 13, Township 7 North and Range 16 West; then along the south boundaries of Sections 13, 14, 15, 16, 17, and 18, Township 7 North and Range 16 West; then north along the range line common to Range 16 West and Range 17 West to the north boundary of the Angeles National Forest (collinear with the Township line common to Township 8 North and Township 7 North); then west and north along the Angeles National Forest boundary to the point of intersection with the south boundary of the Rancho La Liebre Land Grant; then west and north along this land grant boundary to the Los Angeles-Kern County boundary.				
Trona:				
San Bernardino County (part)		Unclassifiable/Attainment.		
That portion of San Bernardino County that lies inside Hydrologic Unit Number 18090205.				
Coachella Valley:				
Riverside County (part)		Unclassifiable/Attainment.		

CALIFORNIA—1997 ANNUAL $PM_{2.5}$ NAAQS—Continued

[Primary and secondary]

Designated area	Designation [a]		Classification	
	Date [1]	Type	Date [2]	Type
That portion of Riverside County which lies to the east of a line described as follows: Beginning at the Riverside—San Diego County boundary and running north along the range line common to Range 4 East and Range 3 East, San Bernardino Base and Meridian; then east along the Township line common to Township 8 South and Township 7 South; then north along the range line common to Range 5 East and Range 4 East; then west along the Township line common to Township 6 South and Township 7 South to the southwest corner of Section 34, Township 6 South, Range 4 East; then north along the west boundaries of Sections 34, 27, 22, 15, 10, and 3, Township 6 South, Range 4 East; then west along the Township line common to Township 5 South and Township 6 South; then north along the range line common to Range 4 East and Range 3 East; then west along the south boundaries of Sections 13, 14, 15, 16, 17, and 18, Township 5 South, Range 3 East; then north along the range line common to Range 2 East and Range 3 East;, to the Riverside-San Bernardino County line: And that portion of Riverside County which lies to the west of a line described as follows: That segment of the southwestern boundary line of Hydrologic Unit Number 18100100 within Riverside County, further described as follows: Beginning at the Riverside-Imperial County boundary and running north along the range line common to Range 17 East and Range 16 East, San Bernardino Base and Meridian; then northwest along the ridge line of the Chuckwalla Mountains, through Township 8 South, Range 16 East and Township 7 South, Range 16 East, until the Black Butte Mountain, elevation 4504'; then west and northwest along the ridge line to the southwest corner of Township 5 South, Range 14 East; then north along the range line common to Range 14 East and Range 13 East; then west and northwest along the ridge line to Monument Mountain, elevation 4834'; then southwest and then northwest along the ridge line of the Little San Bernardino Mountains to Quail Mountain, elev. 5814'; then northwest along the ridge line to the Riverside-San Bernardino County line.				
Far Eastern Riverside and San Bernardino Counties:				
San Bernardino County (remainder)		Unclassifiable/Attainment.		
Riverside County (remainder)		Unclassifiable/Attainment..		
Imperial County:				
Imperial County		Unclassifiable/Attainment..		

[a] Includes Indian Country located in each county or area, except as otherwise specified.
[1] This date is 90 days after January 5, 2005, unless otherwise noted.
[2] This date is July 2, 2014, unless otherwise noted.

CALIFORNIA—1997 24-HOUR $PM_{2.5}$ NAAQS

[Primary and secondary]

Designated area	Designation [a]		Classification	
	Date [1]	Type	Date [2]	Type
Chico, CA:				
Butte County (part)		Unclassifiable/Attainment.		
That portion of Butte County which lies west of the line described as follows: (Mount Diablo Base and Meridian) Beginning at the intersection of the Butte-Yuba county line and the township line common to T18N R6E and T19N R6E, west to the township line common to T18N R6E and T19N R6E, then north along the range line common to R5E and R6E, then west along the township line common to T21N and T20N, then north along the range line common to R4E and R5E, then west along the township line common to T24N and T23N to the Butte-Tehama County boundary.				
Imperial County, CA:				
Imperial County (part)		Unclassifiable/Attainment.		
That portion of Imperial County which lies within the line described as follows: (San Bernardino Base and Meridan) Beginning at the intersection of the United States-Mexico border and the southeast corner of T17S R11E, then north along the range line of the eastern edge of range R11E, then east along the township line of the southern edge of T12S to the northeast corner of T13S R15E, then south along the range line common to R15E and R16E, to the United States-Mexico border.				
Los Angeles-South Coast Air Basin, CA:				
Los Angeles County (part)		Nonattainment		Moderate.

CALIFORNIA—1997 24-HOUR $PM_{2.5}$ NAAQS—Continued
[Primary and secondary]

Designated area	Designation [a]		Classification	
	Date [1]	Type	Date [2]	Type
That portion of Los Angeles County which lies south and west of a line described as follows: Beginning at the Los Angeles-San Bernardino County boundary and running west along the Township line common to Township 3 North and Township 2 North, San Bernardino Base and Meridian; then North along the range line common to Range 8 West and Range 9 West; then west along the Township line common to Township 4 North and Township 3 North; then north along the range line common to Range 12 West and Range 13 West to the southeast corner of Section 12, Township 5 North and Range 13 West; then west along the south boundaries of Sections 12, 11, 10, 9, 8, and 7, Township 5 North and Range 13 West to the boundary of the Angeles National Forest which is collinear with the range line common to Range 13 West and Range 14 West; then north and west along the Angeles National Forest boundary to the point of intersection with the Township line common to Township 7 North and Township 6 North (point is at the northwest corner of Section 4 in Township 6 North and Range 14 West); then west along the Township line common to Township 7 North and Township 6 North; then north along the range line common to Range 15 West and Range 16 West to the southeast corner of Section 13, Township 7 North and Range 16 West; then along the south boundaries of Sections 13, 14, 15, 16, 17 and 18, Township 7 North and Range 16 West; then north along the range line common to Range 16 West and Range 17 West to the north boundary of the Angeles National Forest (collinear with the Township line common to Township 8 North and Township 7 North); then west and north along the Angeles National Forest boundary to the point of intersection with the south boundary of the Rancho La Liebre Land Grant; then west and north along this land grant boundary to the Los Angeles-Kern County boundary.				
Orange County		Nonattainment		Moderate.
Riverside County (part)		Nonattainment		Moderate.
That portion of Riverside County which lies to the west of a line described as follows: Beginning at the Riverside-San Diego County boundary and running north along the range line common to Range 4 East and Range 3 East, San Bernardino Base and Meridian; then east along the Township line common to Township 8 South and Township 7 South; then north along the range line common to Range 5 East and Range 4 East; then west along the Township line common to Township 6 South and Township 7 South to the southwest corner of Section 34, Township 6 South, Range 4 East; then north along the west boundaries of Sections 34, 27, 22, 15, 10, and 3, Township 6 South, Range 4 East; then west along the Township line common to Township 5 South and Township 6 South; then north along the range line common to Range 4 East and Range 3 East; then west along the south boundaries of Sections 13, 14, 15, 16, 17, and 18, Township 5 South, Range 3 East; then north along the range line common to Range 2 East and Range 3 East; to the Riverside-San Bernardino County Line (excluding the lands of the Santa Rosa Band of Cahuilla Mission Indians).				
That part of the lands of the Santa Rosa Band of Cahuilla Mission Indians which is excluded from the Riverside County (part) nonattainment area.		Nonattainment		Moderate.
San Bernardino County (part)		Nonattainment		Moderate.
That portion of San Bernardino County which lies south and west of a line described as follows: Beginning at the San Bernardino-Riverside County boundary and running north along the range line common to Range 3 East and Range 2 East, San Bernardino Base and Meridian; then west along the Township line common to Township 3 North and Township 2 North to the San Bernardino-Los Angeles County boundary.				
Sacramento, CA:				
El Dorado County (part)		Unclassifiable/Attainment.		
That portion of El Dorado County which lies west of the line described as follows: (Mount Diablo Base and Meridian) Beginning at the intersection of El Dorado-Amador county line and the township line common to townships T8N R10E and T8N R11E, then north along the range line common to ranges R10E and R11E, then east along the township line common to T9N and T8N, then north along the range line common to ranges R12E and R13E, then west along the township line common to T12N and T11N, then north along the range line common to ranges R10E and R11E, then west along the township line common to T13N and T12N, then north along the range line common to ranges R9E and R10E, to the El Dorado-Placer County boundary.				
Placer County (part)		Unclassifiable/Attainment.		
That portion of Placer County which lies west of the line described as follows: (Mount Diablo Base and Meridian) Beginning at the intersection of the Placer-El Dorado County line and the township line common to townships T12N R9E and T13N R9E, then running west along the township line common to townships T12N R9E and T13N R9E, then north along the range line common to ranges R8E and R9E, to the Placer-Nevada County boundary.				
Sacramento County		Unclassifiable/Attainment.		
Solano County (part)		Unclassifiable/Attainment.		
That portion of Solano County which lies north and east of a line described as follows: beginning at the intersection of the westerly boundary of Solano County and the ¼ section line running east and west through the center of Section 34; Township 6 North, Range 2 West, Mount Diablo Base and Meridian, thence east along said ¼ section line to the east boundary of Section 36, Township 6 North, Range 2 West, thence south ½ mile and east 2.0 miles, more or less, along the west and south boundary of Los Putos Rancho to the northwest corner of Section 4, Township 5 North, Range 1 West, thence east along a line common to Township 5 North and Township 6 North to the northeast corner of Section 3, Township 5 North, Range 1 East, thence south along section lines to the southeast corner of Section 10, Township 3 North, Range 1 East, thence east along section lines to the south ¼ corner of Section 8, Township 3 North, Range 2 East, thence east to the boundary between Solano and Sacramento Counties.				
Yolo County (part)		Unclassifiable/Attainment.		

CALIFORNIA—1997 24-HOUR $PM_{2.5}$ NAAQS—Continued
[Primary and secondary]

Designated area	Designation [a]		Classification	
	Date [1]	Type	Date [2]	Type
That portion of Yolo County which lies east of the line described as follows: (Mount Diablo Base and Meridian) Beginning at the intersection of Yolo-Solano County boundary and the range line of the eastern edge of township T8N R2W, north along the range line of the eastern edge of township T8N R2W, continuing north along the range line common to ranges R2W and R1W, to the Yolo-Colusa County boundary.				
San Francisco Bay Area, CA:				
Alameda County		Unclassifiable/Attainment.		
Contra Costa County		Unclassifiable/Attainment.		
Marin County		Unclassifiable/Attainment.		
Napa County		Unclassifiable/Attainment.		
San Francisco County		Unclassifiable/Attainment.		
San Mateo County		Unclassifiable/Attainment.		
Santa Clara County		Unclassifiable/Attainment.		
Solano County (part)		Unclassifiable/Attainment.		
That portion of Solano County which lies south and west of a line described as follows: Beginning at the intersection of the westerly boundary of Solano County and the ¼ section line running east and west through the center of Section 34, Township 6 North, Range 2 West, Mount Diablo Base and Meridian, thence east along said ¼ section line to the east boundary of Section 36, Township 6 North, Range 2 West, thence south ½ mile and east 2.0 miles, more or less, along the west and south boundary of Los Putos Rancho to the northwest corner of Section 4, Township 5 North, Range 1 West thence east along a line common to T5N and T6N to the northeast corner of Section 3, T5N, R1E, thence south along section lines to the southeast corner of Section 10, T3N, R1E, thence east along section lines to the south ¼ corner of Section 8, T3N, R2E, thence east to the boundary between Solano and Sacramento Counties.				
Sonoma County (part)		Unclassifiable/Attainment..		
That portion of Sonoma County which lies south and east of a line described as follows: Beginning at the southeasterly corner of the Rancho Estero Americano, being on the boundary line between Marin and Sonoma Counties, California; thence running northerly along the easterly boundary line of said Rancho Estero Americano to the northeasterly corner thereof, being an angle corner in the westerly boundary line of Rancho Canada de Jonive; thence running along said boundary of Rancho Canada de Jonive westerly, northerly and easterly to its intersection with the easterly line of Graton Road; thence running along the easterly and southerly line of Graton Road, northerly and easterly to its intersection with the easterly line of Sullivan Road; thence running northerly along said easterly line of Sullivan Road to the southerly line of Green Valley Road; thence running easterly along the said southerly line of Green Valley Road and easterly along the southerly line of State Highway 116, to the westerly line of Vine Hill Road; thence running along the westerly and northerly line of Vine Hill Road, northerly and easterly to its intersection with the westerly line of Laguna Road; thence running northerly along the westerly line of Laguna Road and the northerly projection thereof to the northerly line of Trenton Road; thence running westerly along the northerly line of said Trenton Road to the easterly line of Trenton-Healdsburg Road; thence running northerly along said easterly line of Trenton-Healdsburg Road to the easterly line of Eastside Road; thence running northerly along said easterly line of Eastside Road to its intersection with the southerly line of Rancho Sotoyome; thence running easterly along said southerly line of Rancho Sotoyome to its intersection with the Township line common to Townships 8 and 9 North, M.D.M.; thence running easterly along said township line to its intersection with the boundary line between Sonoma and Napa Counties.				
San Joaquin Valley, CA:				
Fresno County		Nonattainment		Moderate.
Kern County (part)		Nonattainment		Moderate.
That portion of Kern County which lies west and north of a line described as follows: Beginning at the Kern-Los Angeles County boundary and running north and east along the northwest boundary of the Rancho La Liebre Land Grant to the point of intersection with the range line common to R. 16 W. and R. 17 W., San Bernardino Base and Meridian; north along the range line to the point of intersection with the Rancho El Tejon Land Grant boundary; then southeast, northeast, and northwest along the boundary of the Rancho El Tejon Land Grant to the northwest corner of Sec. 3, T11N, R17W; then west 1.2 miles; then north to the Rancho El Tejon Land Grant boundary; then northwest along the Rancho El Tejon line to the southeast corner of Sec. 34, T32S, R30E Mount Diablo Base And Meridian; then north to the northwest corner of Sec. 35, T31S, R30E; then Northeast along the boundary of the Rancho El Tejon Land Grant to the southwest corner of Sec. 18, T. 31 S., R. 31 E.; then east to the southeast corner of Sec. 13, T. 31 S., R. 31 E.; then north along the range line common to R. 31 E. and R. 32 E., Mount Diablo Base and Meridian, to the northwest corner of Sec. 6, T. 29 S., R. 32 E.; then east to the southwest corner of Sec. 31, T. 28 S., R. 32 E.; then north along the range line common to R. 31 E. and R. 32 E. to the northwest corner of Sec. 6, T. 28 S., R. 32 E., then west to the southeast corner of Sec. 36, T. 27 S., R. 31 E., then north along the range line common to R. 31 E. and R. 32 E. to the Kern-Tulare County boundary.				
Kings County		Nonattainment		Moderate.
Madera County		Nonattainment		Moderate.
Merced County		Nonattainment		Moderate.
San Joaquin County		Nonattainment		Moderate.
Stanislaus County		Nonattainment		Moderate.
Tulare County		Nonattainment		Moderate.
Yuba City-Marysville, CA:				
Sutter County		Unclassifiable/Attainment.		
Yuba County (part)		Unclassifiable/Attainment.		

CALIFORNIA—1997 24-HOUR $PM_{2.5}$ NAAQS—Continued
[Primary and secondary]

Designated area	Designation [a]		Classification	
	Date [1]	Type	Date [2]	Type
That portion of Yuba County which lies west of the line described as follows: (Mount Diablo Base and Meridian) Beginning at the intersection of the Yuba-Nevada county line and the range line common to ranges R7E and R8E, north to the southeast corner of township T18N R7E, then west along the township line common to T17N and T18N, then north along the range line common to ranges R6E and R7E, then west along the township line common to T19N and T18N to the Yuba-Butte County boundary.				
North Coast Air Basin:				
Del Norte County		Unclassifiable/Attainment.		
Humboldt County		Unclassifiable/Attainment.		
Mendocino County		Unclassifiable/Attainment.		
Sonoma County (part)		Unclassifiable/Attainment.		
That portion of Sonoma County which lies north and west of a line described as follows: Beginning at the southeasterly corner of the Rancho Estero Americano, being on the boundary line between Marin and Sonoma Counties, California; thence running northerly along the easterly boundary line of said Rancho Estero Americano to the northeasterly corner thereof, being an angle corner in the westerly boundary line of Rancho Canada de Jonive, thence running along said boundary of Rancho Canada de Jonive westerly; northerly and easterly to its intersection with the easterly line of Graton Road; thence running along the easterly and southerly line of Graton Road northerly and easterly to its intersection with the easterly line of Sullivan Road; thence running northerly along said easterly line of Sullivan Road to the southerly line of Green Valley Road; thence running easterly along the said southerly line of Green Valley Road and easterly along the southerly line of State Highway 116, to the westerly and northerly line of Vine Hill Road; thence running along the westerly and northerly line of Vine Hill Road, northerly and easterly to its intersection with the westerly line of Laguna Road; thence running northerly along the westerly line of Laguna Road and the northerly projection thereof to the northerly line of Trenton Road; thence running westerly along the northerly line of said Trenton Road to the easterly line of Trenton-Healdsburg Road to the easterly line of Eastside Road: thence running northerly along said easterly line of Eastside Road to its intersection with the southerly line of Rancho Sotoyome; thence running easterly along said southerly line of Rancho Sotoyome to its intersection with the Township line common to Townships 8 and 9 north, Mt. Diablo Base and Meridian; thence running easterly along said Township line to its intersection with the boundary line between Sonoma and Napa Counties, State of California.				
Trinity County		Unclassifiable/Attainment.		
Northeast Plateau Air Basin:				
Lassen County		Unclassifiable/Attainment.		
Modoc County		Unclassifiable/Attainment..		
Siskiyou County		Unclassifiable/Attainment.		
Lake County Air Basin:				
Lake County		Unclassifiable/Attainment.		
Upper Sacramento Valley Region:				
Butte County (remainder)		Unclassifiable/Attainment.		
Colusa County		Unclassifiable/Attainment.		
Glenn County		Unclassifiable/Attainment.		
Shasta County		Unclassifiable/Attainment.		
Tehama County		Unclassifiable/Attainment.		
Yuba County (remainder)		Unclassifiable/Attainment.		
Sacramento Metropolitan Region:				
Yolo County (remainder)		Unclassifiable/Attainment.		
Northern Mountain Counties:				
Nevada County		Unclassifiable/Attainment.		
Plumas County		Unclassifiable/Attainment.		
Sierra County		Unclassifiable/Attainment.		
Central Mountain Counties:				
Amador County		Unclassifiable/Attainment.		
Calaveras County		Unclassifiable/Attainment.		
Southern Mountain Counties:				
Mariposa County		Unclassifiable/Attainment.		
Tuolumne County		Unclassifiable/Attainment.		
Lake Tahoe Air Basin:				
El Dorado County (remainder)		Unclassifiable/Attainment.		
Placer County (remainder)		Unclassifiable/Attainment.		
North Central Coast Air Basin:				
Monterey County		Unclassifiable/Attainment.		
San Benito County		Unclassifiable/Attainment.		
Santa Cruz County		Unclassifiable/Attainment.		
San Luis Obispo County:				
San Luis Obispo County		Unclassifiable/Attainment.		
Santa Barbara County:				
Santa Barbara County (part)		Unclassifiable/Attainment.		
Excluding San Miguel, Santa Rosa, Santa Cruz and Santa Barbara Islands.				
Santa Barbara County (part)		Unclassifiable/Attainment.		
San Miguel, Santa Rosa, Santa Cruz and Santa Barbara Islands.				
Ventura County:				
Ventura County (part)		Unclassifiable/Attainment.		
Excluding Anacapa and San Nicolas Islands..				
Ventura County (part)		Unclassifiable/Attainment.		
Anacapa and San Nicolas Islands..				
Great Basin Valleys Air Basin:				
Alpine County		Unclassifiable/Attainment.		
Inyo County (part)		Unclassifiable/Attainment.		
That portion of Inyo County that Lies outside Hydrologic Unit Number 18090205.				
Mono County		Unclassifiable/Attainment.		
Coso Junction:				
Inyo County (part)		Unclassifiable/Attainment.		
That portion of Inyo County that lies inside Hydrologic Unit Number 18090205..				

CALIFORNIA—1997 24-HOUR $PM_{2.5}$ NAAQS—Continued
[Primary and secondary]

Designated area	Designation [a]		Classification	
	Date [1]	Type	Date [2]	Type
Eastern Kern County:				
Kern County (part)		Unclassifiable/Attainment.		
That portion of Kern County (with the exception of that portion in Hydrologic Unit Number 18090205—the Indian Wells Valley) east and south of a line described as follows: Beginning at the Kern-Los Angeles County boundary and running north and east along the northwest boundary of the Rancho La Liebre Land Grant to the point of intersection with the range line common to Range 16 West and Range 17 West, San Bernardino Base and Meridian; north along the range line to the point of intersection with the Rancho El Tejon Land Grant boundary; then southeast, northeast, and northwest along the boundary of the Rancho El Tejon Grant to the northwest corner of Section 3, Township 11 North, Range 17 West; then west 1.2 miles; then north to the Rancho El Tejon Land Grant boundary; Then northwest Along the Rancho El Tejon line to the southeast corner of Section 34, Township 32 South, Range 30 East, Mount Diablo Base and Meridian; then north to the northwest corner of Section 35, Township 31 South, Range 30 East; then northeast along the boundary of the Rancho El Tejon Land Grant to the southwest corner of Section 18, Township 31 South, Range 31 East; then east to the southeast corner of Section 13, Township 31 South, Range 31 East; then north along the range line common to Range 31 East and Range 32 East, Mount Diablo Base and Meridian, to the northwest corner of Section 6, Township 29 South, Range 32 East; then east to the southwest corner of Section 31, Township 28 South, Range 32 East; then north along the range line common to Range 31 East and Range 32 East to the northwest corner of Section 6, Township 28 South, Range 32 East, then west to the southeast corner of Section 36, Township 27 South, Range 31 East, then north along the range line common to Range 31 East and Range 32 East to the Kern-Tulare County boundary.				
Indian Wells Valley:				
Kern County (part)		Unclassifiable/Attainment.		
That portion of Kern County that lies inside Hydrologic Unit Number 18090205.				
Western Mojave Desert and Antelope Valley:				
Los Angeles County (part)		Unclassifiable/Attainment.		
That portion of Los Angeles County which lies north and east of a line described as follows: Beginning at the Los Angeles-San Bernardino County boundary and running west along the Township line common to Township 3 North and Township 2 North, San Bernardino Base and Meridian; then north along the range line common to Range 8 West and Range 9 West; then west along the Township line common to Township 4 North and Township 3 North; then north along the range line common to Range 12 West and Range 13 West to the southeast corner of Section 12, Township 5 North and Range 13 West; then west along the south boundaries of Sections 12, 11, 10, 9, 8, and 7, Township 5 North and Range 13 West to the boundary of the Angeles National Forest which is collinear with the range line common to Range 13 West and Range 14 West; then north and west along the Angeles National Forest boundary to the point of intersection with the Township line common to Township 7 North and Township 6 North (point is at the northwest corner of Section 4 in Township 6 North and Range 14 West); then west along the Township line common to Township 7 North and Township 6 North; then north along the range line common to Range 15 West and Range 16 West to the southeast corner of Section 13, Township 7 North and Range 16 West; then along the south boundaries of Sections 13, 14, 15, 16, 17, and 18, Township 7 North and Range 16 West; then north along the range line common to Range 16 West and Range 17 West to the north boundary of the Angeles National Forest (collinear with the Township line common to Township 8 North and Township 7 North); then west and north along the Angeles National Forest boundary to the point of intersection with the south boundary of the Rancho La Liebre Land Grant; then west and north along this land grant boundary to the Los Angeles-Kern County boundary.				
San Bernardino County (part)		Unclassifiable/Attainment.		
That portion of San Bernardino County (with the exception of that portion in Hydrologic Unit Number 18090205) which lies north and east of a line described as follows: Beginning at the San Bernardino-Riverside County boundary and running north along the range line common to Range 3 East and Range 2 East, San Bernardino Base and Meridian; then west along the Township line common to Township 3 North and Township 2 North to the San Bernardino-Los Angeles County boundary; And that portion of San Bernardino County which lies south and west of a line described as follows: latitude 35 degrees, 10 minutes north and longitude 115 degrees, 45 minutes west.				
Trona:				
San Bernardino County (part)		Unclassifiable/Attainment.		
That portion of San Bernardino County that lies inside Hydrologic Unit Number 18090205.				
Coachella Valley:				
Riverside County (part)		Unclassifiable/Attainment.		

CALIFORNIA—1997 24-HOUR $PM_{2.5}$ NAAQS—Continued

[Primary and secondary]

Designated area	Designation [a]		Classification	
	Date [1]	Type	Date [2]	Type
That portion of Riverside County which lies to the east of a line described as follows: Beginning at the Riverside-San Diego County boundary and running north along the range line common to Range 4 East and Range 3 East, San Bernardino Base and Meridian; then east along the Township line common to Township 8 South and Township 7 South; then north along the range line common to Range 5 East and Range 4 East; then west along the Township line common to Township 6 South and Township 7 South to the southwest corner of Section 34, Township 6 South, Range 4 East; then north along the west boundaries of Sections 34, 27, 22, 15, 10, and 3, Township 6 South, Range 4 East; then west along the Township line common to Township 5 South and Township 6 South; then north along the range line common to Range 4 East and Range 3 East; then west along the south boundaries of Sections 13, 14, 15, 16, 17, and 18, Township 5 South, Range 3 East; then North along the range line common to Range 2 East and Range 3 East; to the Riverside-San Bernardino County line: And that portion of Riverside County which lies to the west of a line described as follows: That segment of the southwestern boundary line of Hydrologic Unit Number 18100100 within Riverside County, further described as follows: Beginning at the Riverside-Imperial County boundary and running north along the range line common to Range 17 East and Range 16 East, San Bernardino Base and Meridian; then northwest along the ridge line of the Chuckwalla Mountains, through Township 8 South, Range 16 East and Township 7 South, Range 16 East, until the Black Butte Mountain, Elevation 4504′; then west and northwest along the ridge line to the southwest corner of Township 5 South, Range 14 East; then north along the range line common to Range 14 East and Range 13 East; then west and northwest along the ridge line to Monument Mountain, elevation 4834′; then southwest and then northwest along the ridge line of the Little San Bernardino Mountains to Quail Mountain, elev. 5814′; then northwest along the ridge line to the Riverside-San Bernardino County line.				
Far Eastern Riverside and San Bernardino Counties:				
San Bernardino County (remainder)		Unclassifiable/Attainment..		
Riverside County (remainder)		Unclassifiable/Attainment..		
Imperial County (remainder)		Unclassifiable/Attainment.		
San Diego County		Unclassifiable/Attainment.		

[a] Includes Indian Country located in each county or area, except as otherwise specified.
[1] This date is 90 days after January 5, 2005, unless otherwise noted.
[2] This date is July 2, 2014, unless otherwise noted.

CALIFORNIA—2006 24-HOUR $PM_{2.5}$ NAAQS

[Primary and secondary]

Designated area	Designation [a]		Classification	
	Date [1]	Type	Date [2]	Type
Chico, CA:				
Butte County (part)		Nonattainment		Moderate.
That portion of Butte County which lies west of the line described as follows: (Mount Diablo Base and Meridian) Beginning at the intersection of the Butte-Yuba county line and the township line common to T18N R6E and T19N R6E, west to the township line common to T18N R6E and T19N R6E, then north along the range line common to R5E and R6E, then west along the township line common to T21N and T20N, then north along the range line common to R4E and R5E, then west along the township line common to T24N and T23N to the Butte-Tehama County boundary.				
Imperial County, CA:				
Imperial County (part)		Nonattainment		Moderate.
That portion of Imperial County which lies within the line described as follows: (San Bernardino Base and Meridian) Beginning at the intersection of the United States-Mexico border and the southeast corner of T17S R11E, then north along the range line of the eastern edge of range R11E, then east along the township line of the southern edge of T12S to the northeast corner of T13S R15E, then south along the range line common to R15E and R16E, to the United States-Mexico border.				
Los Angeles-South Coast Air Basin, CA:				
Los Angeles County (part)		Nonattainment		Moderate.

CALIFORNIA—2006 24-HOUR $PM_{2.5}$ NAAQS—Continued
[Primary and secondary]

Designated area	Designation [a]		Classification	
	Date [1]	Type	Date [2]	Type
That portion of Los Angeles County which lies south and west of a line described as follows: Beginning at the Los Angeles-San Bernardino County boundary and running west along the Township line common to Township 3 North and Township 2 North, San Bernardino Base and Meridian; then North along the range line common to Range 8 West and Range 9 West; then west along the Township line common to Township 4 North and Township 3 North; then north along the range line common to Range 12 West and Range 13 West to the southeast corner of Section 12, Township 5 North and Range 13 West; then west along the south boundaries of Sections 12, 11, 10, 9, 8, and 7, Township 5 North and Range 13 West to the boundary of the Angeles National Forest which is collinear with the range line common to Range 13 West and Range 14 West; then north and west along the Angeles National Forest boundary to the point of intersection with the Township line common to Township 7 North and Township 6 North (point is at the northwest corner of Section 4 in Township 6 North and Range 14 West); then west along the Township line common to Township 7 North and Township 6 North; then north along the range line common to Range 15 West and Range 16 West to the southeast corner of Section 13, Township 7 North and Range 16 West; then along the south boundaries of Sections 13, 14, 15, 16, 17 and 18, Township 7 North and Range 16 West; then north along the range line common to Range 16 West and Range 17 West to the north boundary of the Angeles National Forest (collinear with the Township line common to Township 8 North and Township 7 North); then west and north along the Angeles National Forest boundary to the point of intersection with the south boundary of the Rancho La Liebre Land Grant; then west and north along this land grant boundary to the Los Angeles-Kern County boundary.				
Orange County		Nonattainment		Moderate.
Riverside County (part)		Nonattainment		Moderate.
That portion of Riverside County which lies to the west of a line described as follows: Beginning at the Riverside-San Diego County boundary and running north along the range line common to Range 4 East and Range 3 East, San Bernardino Base and Meridian; then east along the Township line common to Township 8 South and Township 7 South; then north along the range line common to Range 5 East and Range 4 East; then west along the Township line common to Township 6 South and Township 7 South to the southwest corner of Section 34, Township 6 South, Range 4 East; then north along the west boundaries of Sections 34, 27, 22, 15, 10, and 3, Township 6 South, Range 4 East; then west along the Township line common to Township 5 South and Township 6 South; then north along the range line common to Range 4 East and Range 3 East; then west along the south boundaries of Sections 13, 14, 15, 16, 17, and 18, Township 5 South, Range 3 East; then north along the range line common to Range 2 East and Range 3 East; to the Riverside-San Bernardino County Line (excluding the lands of the Santa Rosa Band of Cahuilla Mission Indians).				
That part of the lands of the Santa Rosa Band of Cahuilla Mission Indians which is excluded from the Riverside County (part) nonattainment area.		Unclassifiable/Attainment.		
San Bernardino County (part)		Nonattainment		Moderate.
That portion of San Bernardino County which lies south and west of a line described as follows: Beginning at the San Bernardino-Riverside County boundary and running north along the range line common to Range 3 East and Range 2 East, San Bernardino Base and Meridian; then west along the Township line common to Township 3 North and Township 2 North to the San Bernardino-Los Angeles County boundary.				
Sacramento, CA:				
El Dorado County (part)		Nonattainment		Moderate.
That portion of El Dorado County which lies west of the line described as follows: (Mount Diablo Base and Meridian) Beginning at the intersection of El Dorado-Amador county line and the township line common to townships T8N R10E and T8N R11E, then north along the range line common to ranges R10E and R11E, then east along the township line common to T9N and T8N, then north along the range line common to ranges R12E and R13E, then west along the township line common to T12N and T11N, then north along the range line common to ranges R10E and R11E, then west along the township line common to T13N and T12N, then north along the range line common to ranges R9E and R10E, to the El Dorado-Placer County boundary.				
Placer County (part)		Nonattainment		Moderate.
That portion of Placer County which lies west of the line described as follows: (Mount Diablo Base and Meridian) Beginning at the intersection of the Placer-El Dorado County line and the township line common to townships T12N R9E and T13N R9E, then running west along the township line common to townships T12N R9E and T13N R9E, then north along the range line common to ranges R8E and R9E, to the Placer-Nevada County boundary.				
Sacramento County		Nonattainment		Moderate.
Solano County (part)		Nonattainment		Moderate.
That portion of Solano County which lies north and east of a line described as follows: beginning at the intersection of the westerly boundary of Solano County and the 1/4 section line running east and west through the center of Section 34; Township 6 North, Range 2 West, Mount Diablo Base and Meridian, thence east along said 1/4 section line to the east boundary of Section 36, Township 6 North, Range 2 West, thence south 1/2 mile and east 2.0 miles, more or less, along the west and south boundary of Los Putos Rancho to the northwest corner of Section 4, Township 5 North, Range 1 West, thence east along a line common to Township 5 North and Township 6 North to the northeast corner of Section 3, Township 5 North, Range 1 East, thence south along section lines to the southeast corner of Section 10, Township 3 North, Range 1 East, thence east along section lines to the south 1/4 corner of Section 8, Township 3 North, Range 2 East, thence east to the boundary between Solano and Sacramento Counties.				
Yolo County (part)		Nonattainment		Moderate.

CALIFORNIA—2006 24-HOUR $PM_{2.5}$ NAAQS—Continued
[Primary and secondary]

Designated area	Designation [a]		Classification	
	Date [1]	Type	Date [2]	Type
That portion of Yolo County which lies east of the line described as follows: (Mount Diablo Base and Meridian) Beginning at the intersection of Yolo-Solano County boundary and the range line of the eastern edge of township T8N R2W, north along the range line of the eastern edge of township T8N R2W, continuing north along the range line common to ranges R2W and R1W, to the Yolo-Colusa County boundary.				
San Francisco Bay Area, CA:				
Alameda County		Nonattainment		Moderate.
Contra Costa County		Nonattainment		Moderate.
Marin County		Nonattainment		Moderate.
Napa County		Nonattainment		Moderate.
San Francisco County		Nonattainment		Moderate.
San Mateo County		Nonattainment		Moderate.
Santa Clara County		Nonattainment		Moderate.
Solano County (part)		Nonattainment		Moderate.
That portion of Solano County which lies south and west of a line described as follows: Beginning at the intersection of the westerly boundary of Solano County and the 1/4 section line running east and west through the center of Section 34, Township 6 North, Range 2 West, Mount Diablo Base and Meridian, thence east along said 1/4 section line to the east boundary of Section 36, Township 6 North, Range 2 West, thence south 1/2 mile and east 2.0 miles, more or less, along the west and south boundary of Los Putos Rancho to the northwest corner of Section 4, Township 5 North, Range 1 West thence east along a line common to T5N and T6N to the northeast corner of Section 3, T5N, R1E, thence south along section lines to the southeast corner of Section 10, T3N, R1E, thence east along section lines to the south 1/4 corner of Section 8, T3N, R2E, thence east to the boundary between Solano and Sacramento Counties.				
Sonoma County (part)		Nonattainment		Moderate.
That portion of Sonoma County which lies south and east of a line described as follows: Beginning at the southeasterly corner of the Rancho Estero Americano, being on the boundary line between Marin and Sonoma Counties, California; thence running northerly along the easterly boundary line of said Rancho Estero Americano to the northeasterly corner thereof, being an angle corner in the westerly boundary line of Rancho Canada de Jonive; thence running along said boundary of Rancho Canada de Jonive westerly, northerly and easterly to its intersection with the easterly line of Graton Road; thence running along the easterly and southerly line of Graton Road, northerly and easterly to its intersection with the easterly line of Sullivan Road; thence running northerly along said easterly line of Sullivan Road to the southerly line of Green Valley Road; thence running easterly along the said southerly line of Green Valley Road and easterly along the southerly line of State Highway 116, to the westerly line of Vine Hill Road; thence running along the westerly and northerly line of Vine Hill Road, northerly and easterly to its intersection with the westerly line of Laguna Road; thence running northerly along the westerly line of Laguna Road and the northerly projection thereof to the northerly line of Trenton Road; thence running westerly along the northerly line of said Trenton Road to the easterly line of Trenton-Healdsburg Road; thence running northerly along said easterly line of Trenton-Healdsburg Road to the easterly line of Eastside Road; thence running northerly along said easterly line of Eastside Road to its intersection with the southerly line of Rancho Sotoyome; thence running easterly along said southerly line of Rancho Sotoyome to its intersection with the Township line common to Townships 8 and 9 North, M.D.M.; thence running easterly along said township line to its intersection with the boundary line between Sonoma and Napa Counties.				
San Joaquin Valley, CA:				
Fresno County		Nonattainment		Moderate.
Kern County (part)		Nonattainment		Moderate.
That portion of Kern County which lies west and north of a line described as follows: Beginning at the Kern-Los Angeles County boundary and running north and east along the northwest boundary of the Rancho La Liebre Land Grant to the point of intersection with the range line common to R. 16 W. and R. 17 W., San Bernardino Base and Meridian; north along the range line to the point of intersection with the Rancho El Tejon Land Grant boundary; then southeast, northeast, and northwest along the boundary of the Rancho El Tejon Land Grant to the northwest corner of Sec. 3, T11N, R17W; then west 1.2 miles; then north to the Rancho El Tejon Land Grant boundary; then northwest along the Rancho El Tejon line to the southeast corner of Sec. 34, T32S, R30E Mount Diablo Base And Meridian; then north to the northwest corner of Sec. 35, T31S, R30E; then Northeast along the boundary of the Rancho El Tejon Land Grant to the southwest corner of Sec. 18, T. 31 S., R. 31 E.; then east to the southeast corner of Sec. 13, T. 31 S., R. 31 E.; then north along the range line common to R. 31 E. and R. 32 E., Mount Diablo Base and Meridian, to the northwest corner of Sec. 6, T. 29 S., R. 32 E.; then east to the southwest corner of Sec. 31, T. 28 S., R. 32 E.; then north along the range line common to R. 31 E. and R. 32 E. to the northwest corner of Sec. 6, T. 28 S., R. 32 E., then west to the southeast corner of Sec. 36, T. 27 S., R. 31 E., then north along the range line common to R. 31 E. and R. 32 E. to the Kern-Tulare County boundary.				
Kings County		Nonattainment		Moderate.
Madera County		Nonattainment		Moderate.
Merced County		Nonattainment		Moderate.
San Joaquin County		Nonattainment		Moderate.
Stanislaus County		Nonattainment		Moderate.
Tulare County		Nonattainment		Moderate.
Yuba City-Marysville, CA:				
Sutter County		Nonattainment		Moderate.
Yuba County (part)		Nonattainment		Moderate.

CALIFORNIA—2006 24-HOUR $PM_{2.5}$ NAAQS—Continued
[Primary and secondary]

Designated area	Designation [a]		Classification	
	Date [1]	Type	Date [2]	Type
That portion of Yuba County which lies west of the line described as follows: (Mount Diablo Base and Meridian) Beginning at the intersection of the Yuba-Nevada county line and the range line common to ranges R7E and R8E, north to the southeast corner of township T18N R7E, then west along the township line common to T17N and T18N, then north along the range line common to ranges R6E and R7E, then west along the township line common to T19N and T18N to the Yuba-Butte County boundary.				
Rest of State:				
North Coast Air Basin:				
Del Norte County		Unclassifiable/Attainment.		
Humboldt County		Unclassifiable/Attainment.		
Mendocino County		Unclassifiable/Attainment.		
Sonoma County (part)		Unclassifiable/Attainment.		
That portion of Sonoma County which lies north and west of a line described as follows: Beginning at the southeasterly corner of the Rancho Estero Americano, being on the boundary line between Marin and Sonoma Counties, California; thence running northerly along the easterly boundary line of said Rancho Estero Americano to the northeasterly corner thereof, being an angle corner in the westerly boundary line of Rancho Canada de Jonive, thence running along said boundary of Rancho Canada de Jonive westerly; northerly and easterly to its intersection with the easterly line of Graton Road; thence running along the easterly and southerly line of Graton Road northerly and easterly to its intersection with the easterly line of Sullivan Road; thence running northerly along said easterly line of Sullivan Road to the southerly line of Green Valley Road; thence running easterly along the said southerly line of Green Valley Road and easterly along the southerly line of State Highway 116, to the westerly and northerly line of Vine Hill Road; thence running along the westerly and northerly line of Vine Hill Road, northerly and easterly to its intersection with the westerly line of Laguna Road; thence running northerly along the westerly line of Laguna Road and the northerly projection thereof to the northerly line of Trenton Road; thence running westerly along the northerly line of said Trenton Road to the easterly line of Trenton-Healdsburg Road to the easterly line of Eastside Road: thence running northerly along said easterly line of Eastside Road to its intersection with the southerly line of Rancho Sotoyome; thence running easterly along said southerly line of Rancho Sotoyome to its intersection with the Township line common to Townships 8 and 9 north, Mt. Diablo Base and Meridian; thence running easterly along said Township line to its intersection with the boundary line between Sonoma and Napa Counties, State of California.				
Trinity County		Unclassifiable/Attainment.		
Northeast Plateau Air Basin:				
Lassen County		Unclassifiable/Attainment.		
Modoc County		Unclassifiable/Attainment.		
Siskiyou County		Unclassifiable/Attainment.		
Lake County Air Basin:				
Lake County		Unclassifiable/Attainment.		
Upper Sacramento Valley Region:				
Butte County (remainder)		Unclassifiable/Attainment.		
Colusa County		Unclassifiable/Attainment.		
Glenn County		Unclassifiable/Attainment.		
Shasta County		Unclassifiable/Attainment.		
Tehama County		Unclassifiable/Attainment.		
Yuba County (remainder)		Unclassifiable/Attainment.		
Sacramento Metropolitan Region:				
Yolo County (remainder)		Unclassifiable/Attainment.		
Northern Mountain Counties:				
Nevada County		Unclassifiable/Attainment.		
Plumas County		Unclassifiable/Attainment.		
Sierra County		Unclassifiable/Attainment.		
Central Mountain Counties:				
Amador County		Unclassifiable/Attainment.		
Calaveras County		Unclassifiable/Attainment.		
Southern Mountain Counties:				
Mariposa County		Unclassifiable/Attainment.		
Tuolumne County		Unclassifiable/Attainment.		
Lake Tahoe Air Basin:				
El Dorado County (remainder)		Unclassifiable/Attainment.		
Placer County (remainder)		Unclassifiable/Attainment.		
North Central Coast Air Basin:				
Monterey County		Unclassifiable/Attainment.		
San Benito County		Unclassifiable/Attainment.		
Santa Cruz County		Unclassifiable/Attainment.		
San Luis Obispo County:				
San Luis Obispo County		Unclassifiable/Attainment.		
Santa Barbara County:				
Santa Barbara County (part)		Unclassifiable/Attainment.		
Excluding San Miguel, Santa Rosa, Santa Cruz, and Santa Barbara Islands				
Santa Barbara County (part)		Unclassifiable/Attainment.		
San Miguel, Santa Rosa, Santa Cruz, and Santa Barbara Islands				
Ventura County:				
Ventura County (part)		Unclassifiable/Attainment.		
Excluding Anacapa and San Nicolas Islands.				
Ventura County (part)		Unclassifiable/Attainment.		
Anacapa and San Nicolas Islands.				
Great Basin Valleys Air Basin:				
Alpine County		Unclassifiable/Attainment.		
Inyo County (part)		Unclassifiable/Attainment.		
That portion of Inyo County that Lies outside Hydrologic Unit Number 18090205.				
Mono County		Unclassifiable/Attainment.		
Coso Junction:				
Inyo County (part)		Unclassifiable/Attainment.		

CALIFORNIA—2006 24-HOUR $PM_{2.5}$ NAAQS—Continued
[Primary and secondary]

Designated area	Designation [a]		Classification	
	Date [1]	Type	Date [2]	Type
That portion of Inyo County that lies inside Hydrologic Unit Number 18090205.				
Eastern Kern County:				
Kern County (part)		Unclassifiable/Attainment.		
That portion of Kern County (with the exception of that portion in Hydrologic Unit Number 18090205—the Indian Wells Valley) east and south of a line described as follows: Beginning at the Kern-Los Angeles County boundary and running north and east along the northwest boundary of the Rancho La Liebre Land Grant to the point of intersection with the range line common to Range 16 West and Range 17 West, San Bernardino Base and Meridian; north along the range line to the point of intersection with the Rancho El Tejon Land Grant boundary; then southeast, northeast, and northwest along the boundary of the Rancho El Tejon Grant to the northwest corner of Section 3, Township 11 North, Range 17 West; then west 1.2 miles; then north to the Rancho El Tejon Land Grant boundary; Then northwest Along the Rancho El Tejon line to the southeast corner of Section 34, Township 32 South, Range 30 East, Mount Diablo Base and Meridian; then north to the northwest corner of Section 35, Township 31 South, Range 30 East; then northeast along the boundary of the Rancho El Tejon Land Grant to the southwest corner of Section 18, Township 31 South, Range 31 East; then east to the southeast corner of Section 13, Township 31 South, Range 31 East; then north along the range line common to Range 31 East and Range 32 East, Mount Diablo Base and Meridian, to the northwest corner of Section 6, Township 29 South, Range 32 East; then east to the southwest corner of Section 31, Township 28 South, Range 32 East; then north along the range line common to Range 31 East and Range 32 East to the northwest corner of Section 6, Township 28 South, Range 32 East, then west to the southeast corner of Section 36, Township 27 South, Range 31 East, then north along the range line common to Range 31 East and Range 32 East to the Kern-Tulare County boundary.				
Indian Wells Valley:				
Kern County (part)		Unclassifiable/Attainment.		
That portion of Kern County that lies inside Hydrologic Unit Number 18090205.				
Western Mojave Desert and Antelope Valley:				
Los Angeles County (part)		Unclassifiable/Attainment.		
That portion of Los Angeles County which lies north and east of a line described as follows: Beginning at the Los Angeles-San Bernardino County boundary and running west along the Township line common to Township 3 North and Township 2 North, San Bernardino Base and Meridian; then north along the range line common to Range 8 West and Range 9 West; then west along the Township line common to Township 4 North and Township 3 North; then north along the range line common to Range 12 West and Range 13 West to the southeast corner of Section 12, Township 5 North and Range 13 West; then west along the south boundaries of Sections 12, 11, 10, 9, 8, and 7, Township 5 North and Range 13 West to the boundary of the Angeles National Forest which is collinear with the range line common to Range 13 West and Range 14 West; then north and west along the Angeles National Forest boundary to the point of intersection with the Township line common to Township 7 North and Township 6 North (point is at the northwest corner of Section 4 in Township 6 North and Range 14 West); then west along the Township line common to Township 7 North and Township 6 North; then north along the range line common to Range 15 West and Range 16 West to the southeast corner of Section 13, Township 7 North and Range 16 West; then along the south boundaries of Sections 13, 14, 15, 16, 17, and 18, Township 7 North and Range 16 West; then north along the range line common to Range 16 West and Range 17 West to the north boundary of the Angeles National Forest (collinear with the Township line common to Township 8 North and Township 7 North); then west and north along the Angeles National Forest boundary to the point of intersection with the south boundary of the Rancho La Liebre Land Grant; then west and north along this land grant boundary to the Los Angeles-Kern County boundary.				
San Bernardino County (part)		Unclassifiable/Attainment.		
That portion of San Bernardino County (with the exception of that portion in Hydrologic Unit Number 18090205) which lies north and east of a line described as follows: Beginning at the San Bernardino-Riverside County boundary and running north along the range line common to Range 3 East and Range 2 East, San Bernardino Base and Meridian; then west along the Township line common to Township 3 North and Township 2 North to the San Bernardino-Los Angeles County boundary; And that portion of San Bernardino County which lies south and west of a line described as follows: latitude 35 degrees, 10 minutes north and longitude 115 degrees, 45 minutes west.				
Trona:				
San Bernardino County (part)		Unclassifiable/Attainment.		
That portion of San Bernardino County that lies inside Hydrologic Unit Number 18090205.				
Coachella Valley:				
Riverside County (part)		Unclassifiable/Attainment.		

CALIFORNIA—2006 24-HOUR $PM_{2.5}$ NAAQS—Continued

[Primary and secondary]

Designated area	Designation [a]		Classification	
	Date [1]	Type	Date [2]	Type
That portion of Riverside County which lies to the east of a line described as follows: Beginning at the Riverside-San Diego County boundary and running north along the range line common to Range 4 East and Range 3 East, San Bernardino Base and Meridian; then east along the Township line common to Township 8 South and Township 7 South; then north along the range line common to Range 5 East and Range 4 East; then west along the Township line common to Township 6 South and Township 7 South to the southwest corner of Section 34, Township 6 South, Range 4 East; then north along the west boundaries of Sections 34, 27, 22, 15, 10, and 3, Township 6 South, Range 4 East; then west along the Township line common to Township 5 South and Township 6 South; then north along the range line common to Range 4 East and Range 3 East; then west along the south boundaries of Sections 13, 14, 15, 16, 17, and 18, Township 5 South, Range 3 East; then North along the range line common to Range 2 East and Range 3 East; to the Riverside-San Bernardino County line: And that portion of Riverside County which lies to the west of a line described as follows: That segment of the southwestern boundary line of Hydrologic Unit Number 18100100 within Riverside County, further described as follows: Beginning at the Riverside-Imperial County boundary and running north along the range line common to Range 17 East and Range 16 East, San Bernardino Base and Meridian; then northwest along the ridge line of the Chuckwalla Mountains, through Township 8 South, Range 16 East and Township 7 South, Range 16 East, until the Black Butte Mountain, Elevation 45≥05≥′; then west and northwest along the ridge line to the southwest corner of Township 5 South, Range 14 East; then north along the range line common to Range 14 East and Range 13 East; then west and northwest along the ridge line to Monument Mountain, elevation 4834′; then southwest and then northwest along the ridge line of the Little San Bernardino Mountains to Quail Mountain, elev. 5814′; then northwest along the ridge line to the Riverside-San Bernardino County line.				
Far Eastern Riverside and San Bernardino Counties:				
San Bernardino County (remainder)		Unclassifiable/Attainment.		
Riverside County (remainder)		Unclassifiable/Attainment.		
Imperial County (remainder)		Unclassifiable Attainment.		
San Diego County		Unclassifiable/Attainment.		

[a] Includes Indian Country located in each county or area, except as otherwise specified.
[1] This date is 30 days after November 13, 2009, unless otherwise noted.
[2] This date is July 2, 2014, unless otherwise noted.

* * * * *

■ 7. Section 81.306 is amended as follows:

■ a. By removing the tables titled ''Colorado—$PM_{2.5}$ (Annual NAAQS)'' and ''Colorado—$PM_{2.5}$ [24-hour NAAQS]''.

■ b. By adding three tables titled ''Colorado—1997 Annual $PM_{2.5}$ NAAQS (Primary and Secondary)'' and ''Colorado—1997 24-hour $PM_{2.5}$ NAAQS (Primary and Secondary)'' and ''Colorado—2006 24-hour $PM_{2.5}$ NAAQS (Primary and Secondary)'' before the table titled ''Colorado—NO_2 (1971 Annual Standard)''.

The additions read as follows:

§ 81.306 Colorado.

* * * * *

COLORADO—1997 ANNUAL $PM_{2.5}$ NAAQS

[Primary and secondary]

Designated area	Designation [a]		Classification	
	Date [1]	Type	Date	Type
Denver-Boulder Area:				
Adams County (part) West of Kiowa Creek		Unclassifiable/Attainment.		
Arapahoe County (part) West of Kiowa Creek		Unclassifiable/Attainment.		
Boulder County (part) Excluding Rocky Mountain National Park.		Unclassifiable/Attainment.		
Broomfield County		Unclassifiable/Attainment.		
Denver County		Unclassifiable/Attainment.		
Douglas County		Unclassifiable/Attainment.		
Jefferson County		Unclassifiable/Attainment.		
State AQCR 01:				
Logan County		Unclassifiable/Attainment.		
Morgan County		Unclassifiable/Attainment.		
Phillips County		Unclassifiable/Attainment.		
Sedgwick County		Unclassifiable/Attainment.		
Washington County		Unclassifiable/Attainment.		
Yuma County		Unclassifiable/Attainment.		
State AQCR 02:				
Larimer County		Unclassifiable/Attainment.		
Weld County		Unclassifiable/Attainment.		
State AQCR 03 (remainder of):				
Adams County (remainder)		Unclassifiable/Attainment.		
Arapahoe County (remainder)		Unclassifiable/Attainment.		
Boulder County (remainder)		Unclassifiable/Attainment.		

COLORADO—1997 ANNUAL $PM_{2.5}$ NAAQS—Continued

[Primary and secondary]

Designated area	Designation [a]		Classification	
	Date [1]	Type	Date	Type
Clear Creek County		Unclassifiable/Attainment.		
Gilpin County		Unclassifiable/Attainment.		
State AQCR 04:				
El Paso County		Unclassifiable/Attainment.		
Park County		Unclassifiable/Attainment.		
Teller County		Unclassifiable/Attainment.		
State AQCR 05:				
Cheyenne County		Unclassifiable/Attainment.		
Elbert County		Unclassifiable/Attainment.		
Kit Carson County		Unclassifiable/Attainment.		
Lincoln County		Unclassifiable/Attainment.		
State AQCR 06:				
Baca County		Unclassifiable/Attainment.		
Bent County		Unclassifiable/Attainment.		
Crowley County		Unclassifiable/Attainment.		
Kiowa County		Unclassifiable/Attainment.		
Otero County		Unclassifiable/Attainment.		
Prowers County		Unclassifiable/Attainment.		
State AQCR 07:				
Huerfano County		Unclassifiable/Attainment.		
Las Animas County		Unclassifiable/Attainment.		
Pueblo County		Unclassifiable/Attainment.		
State AQCR 08:				
Alamosa County		Unclassifiable/Attainment.		
Conejos County		Unclassifiable/Attainment.		
Costilla County		Unclassifiable/Attainment.		
Mineral County		Unclassifiable/Attainment.		
Rio Grande County		Unclassifiable/Attainment.		
Saguache County		Unclassifiable/Attainment.		
State AQCR 09:				
Archuleta County		Unclassifiable/Attainment.		
Dolores County		Unclassifiable/Attainment.		
La Plata County		Unclassifiable/Attainment.		
Montezuma County		Unclassifiable/Attainment.		
San Juan County		Unclassifiable/Attainment.		
State AQCR 10:				
Delta County		Unclassifiable/Attainment.		
Gunnison County		Unclassifiable/Attainment.		
Hinsdale County		Unclassifiable/Attainment.		
Montrose County		Unclassifiable/Attainment.		
Ouray County		Unclassifiable/Attainment.		
San Miguel County		Unclassifiable/Attainment.		
State AQCR 11:				
Garfield County		Unclassifiable/Attainment.		
Mesa County		Unclassifiable/Attainment.		
Moffat County		Unclassifiable/Attainment.		
Rio Blanco County		Unclassifiable/Attainment.		
State AQCR 12:				
Eagle County		Unclassifiable/Attainment.		
Grand County		Unclassifiable/Attainment.		
Jackson County		Unclassifiable/Attainment.		
Pitkin County		Unclassifiable/Attainment.		
Routt County		Unclassifiable/Attainment.		
Summit County		Unclassifiable/Attainment.		
State AQCR 13:				
Chaffee County		Unclassifiable/Attainment.		
Custer County		Unclassifiable/Attainment.		
Fremont County		Unclassifiable/Attainment.		
Lake County		Unclassifiable/Attainment.		

[a] Includes Indian Country located in each county or area, except as otherwise specified.
[1] This date is 90 days after January 5, 2005, unless otherwise noted.

COLORADO—1997 24-HOUR $PM_{2.5}$ NAAQS

[Primary and secondary]

Designated area	Designation [a]		Classification	
	Date [1]	Type	Date	Type
Denver-Boulder Area:				
Adams County (part) West of Kiowa Creek		Unclassifiable/Attainment.		
Arapahoe County (part) West of Kiowa Creek		Unclassifiable/Attainment.		
Boulder County (part) Excluding Rocky Mountain National Park.		Unclassifiable/Attainment.		
Broomfield County		Unclassifiable/Attainment.		
Denver County		Unclassifiable/Attainment.		
Douglas County		Unclassifiable/Attainment.		
Jefferson County		Unclassifiable/Attainment.		
State AQCR 01:				
Logan County		Unclassifiable/Attainment.		
Morgan County		Unclassifiable/Attainment.		
Phillips County		Unclassifiable/Attainment.		
Sedgwick County		Unclassifiable/Attainment.		
Washington County		Unclassifiable/Attainment.		
Yuma County		Unclassifiable/Attainment.		
State AQCR 02:				
Larimer County		Unclassifiable/Attainment.		
Weld County		Unclassifiable/Attainment.		
State AQCR 03 (remainder of):				
Adams County (remainder)		Unclassifiable/Attainment.		
Arapahoe County (remainder)		Unclassifiable/Attainment.		
Boulder County (remainder)		Unclassifiable/Attainment.		
Clear Creek County		Unclassifiable/Attainment.		
Gilpin County		Unclassifiable/Attainment.		
State AQCR 04:				
El Paso County		Unclassifiable/Attainment.		
Park County		Unclassifiable/Attainment.		
Teller County		Unclassifiable/Attainment.		
State AQCR 05:				
Cheyenne County		Unclassifiable/Attainment.		
Elbert County		Unclassifiable/Attainment.		
Kit Carson County		Unclassifiable/Attainment.		
Lincoln County		Unclassifiable/Attainment.		
State AQCR 06:				
Baca County		Unclassifiable/Attainment.		
Bent County		Unclassifiable/Attainment.		
Crowley County		Unclassifiable/Attainment.		
Kiowa County		Unclassifiable/Attainment.		
Otero County		Unclassifiable/Attainment.		
Prowers County		Unclassifiable/Attainment.		
State AQCR 07:				
Huerfano County		Unclassifiable/Attainment.		
Las Animas County		Unclassifiable/Attainment.		
Pueblo County		Unclassifiable/Attainment.		
State AQCR 08:				
Alamosa County		Unclassifiable/Attainment.		
Conejos County		Unclassifiable/Attainment.		
Costilla County		Unclassifiable/Attainment.		
Mineral County		Unclassifiable/Attainment.		
Rio Grande County		Unclassifiable/Attainment.		
Saguache County		Unclassifiable/Attainment.		
State AQCR 09:				
Archuleta County		Unclassifiable/Attainment.		
Dolores County		Unclassifiable/Attainment.		
La Plata County		Unclassifiable/Attainment.		
Montezuma County		Unclassifiable/Attainment.		
San Juan County		Unclassifiable/Attainment.		
State AQCR 10:				
Delta County		Unclassifiable/Attainment.		
Gunnison County		Unclassifiable/Attainment.		
Hinsdale County		Unclassifiable/Attainment.		
Montrose County		Unclassifiable/Attainment.		
Ouray County		Unclassifiable/Attainment.		
San Miguel County		Unclassifiable/Attainment.		
State AQCR 11:				
Garfield County		Unclassifiable/Attainment.		
Mesa County		Unclassifiable/Attainment.		
Moffat County		Unclassifiable/Attainment.		

COLORADO—1997 24-HOUR $PM_{2.5}$ NAAQS—Continued

[Primary and secondary]

Designated area	Designation [a]		Classification	
	Date [1]	Type	Date	Type
Rio Blanco County		Unclassifiable/Attainment.		
State AQCR 12:				
Eagle County		Unclassifiable/Attainment.		
Grand County		Unclassifiable/Attainment.		
Jackson County		Unclassifiable/Attainment.		
Pitkin County		Unclassifiable/Attainment.		
Routt County		Unclassifiable/Attainment.		
Summit County		Unclassifiable/Attainment.		
State AQCR 13:				
Chaffee County		Unclassifiable/Attainment.		
Custer County		Unclassifiable/Attainment.		
Fremont County		Unclassifiable/Attainment.		
Lake County		Unclassifiable/Attainment.		

[a] Includes Indian Country located in each county or area, except as otherwise specified.
[1] This date is 90 days after January 5, 2005, unless otherwise noted.

COLORADO—2006 24-HOUR $PM_{2.5}$ NAAQS

[Primary and secondary]

Designated area	Designation [a]		Classification	
	Date [1]	Type	Date	Type
Denver-Boulder Area:				
Adams County (part) West of Kiowa Creek		Unclassifiable/Attainment..		
Arapahoe County (part) West of Kiowa Creek		Unclassifiable/Attainment..		
Boulder County (part) Excluding Rocky Mountain National Park.		Unclassifiable/Attainment..		
Broomfield County		Unclassifiable/Attainment..		
Denver County		Unclassifiable/Attainment..		
Douglas County		Unclassifiable/Attainment..		
Jefferson County		Unclassifiable/Attainment..		
State AQCR 01:				
Logan County		Unclassifiable/Attainment..		
Morgan County		Unclassifiable/Attainment..		
Phillips County		Unclassifiable/Attainment..		
Sedgwick County		Unclassifiable/Attainment..		
Washington County		Unclassifiable/Attainment..		
Yuma County		Unclassifiable/Attainment..		
State AQCR 02:				
Larimer County		Unclassifiable/Attainment..		
Weld County		Unclassifiable/Attainment..		
State AQCR 03 (remainder of):				
Adams County (remainder)		Unclassifiable/Attainment..		
Arapahoe County (remainder)		Unclassifiable/Attainment..		
Boulder County (remainder)		Unclassifiable/Attainment..		
Clear Creek County		Unclassifiable/Attainment..		
Gilpin County		Unclassifiable/Attainment..		
State AQCR 04:				
El Paso County		Unclassifiable/Attainment..		
Park County		Unclassifiable/Attainment..		
Teller County		Unclassifiable/Attainment..		
State AQCR 05:				
Cheyenne County		Unclassifiable/Attainment..		
Elbert County		Unclassifiable/Attainment..		
Kit Carson County		Unclassifiable/Attainment..		
Lincoln County		Unclassifiable/Attainment..		
State AQCR 06:				
Baca County		Unclassifiable/Attainment..		
Bent County		Unclassifiable/Attainment..		
Crowley County		Unclassifiable/Attainment..		
Kiowa County		Unclassifiable/Attainment..		
Otero County		Unclassifiable/Attainment..		
Prowers County		Unclassifiable/Attainment..		
State AQCR 07:				
Huerfano County		Unclassifiable/Attainment..		
Las Animas County		Unclassifiable/Attainment..		
Pueblo County		Unclassifiable/Attainment..		

COLORADO—2006 24-HOUR $PM_{2.5}$ NAAQS—Continued

[Primary and secondary]

Designated area	Designation [a]		Classification	
	Date [1]	Type	Date	Type
State AQCR 08:				
Alamosa County		Unclassifiable/Attainment..		
Conejos County		Unclassifiable/Attainment..		
Costilla County		Unclassifiable/Attainment..		
Mineral County		Unclassifiable/Attainment..		
Rio Grande County		Unclassifiable/Attainment..		
Saguache County		Unclassifiable/Attainment..		
State AQCR 09:				
Archuleta County		Unclassifiable/Attainment..		
Dolores County		Unclassifiable/Attainment..		
La Plata County		Unclassifiable/Attainment..		
Montezuma County		Unclassifiable/Attainment..		
San Juan County		Unclassifiable/Attainment..		
State AQCR 10:				
Delta County		Unclassifiable/Attainment..		
Gunnison County		Unclassifiable/Attainment..		
Hinsdale County		Unclassifiable/Attainment..		
Montrose County		Unclassifiable/Attainment..		
Ouray County		Unclassifiable/Attainment..		
San Miguel County		Unclassifiable/Attainment..		
State AQCR 11:				
Garfield County		Unclassifiable/Attainment..		
Mesa County		Unclassifiable/Attainment..		
Moffat County		Unclassifiable/Attainment..		
Rio Blanco County		Unclassifiable/Attainment..		
State AQCR 12:				
Eagle County		Unclassifiable/Attainment..		
Grand County		Unclassifiable/Attainment..		
Jackson County		Unclassifiable/Attainment..		
Pitkin County		Unclassifiable/Attainment..		
Routt County		Unclassifiable/Attainment..		
Summit County		Unclassifiable/Attainment..		
State AQCR 13:				
Chaffee County		Unclassifiable/Attainment..		
Custer County		Unclassifiable/Attainment..		
Fremont County		Unclassifiable/Attainment..		
Lake County		Unclassifiable/Attainment..		

[a] Includes Indian Country located in each county or area, except as otherwise specified.
[1] This date is 30 days after November 13, 2009, unless otherwise noted.

* * * * *

■ 8. Section 81.307 is amended as follows:

■ a. By removing the tables titled ''Connecticut—$PM_{2.5}$ (Annual NAAQS)'' and ''Connecticut—$PM_{2.5}$ [24-hour NAAQS]''.

■ b. By adding three tables titled ''Connecticut—1997 Annual $PM_{2.5}$ NAAQS (Primary and Secondary)'' and ''Connecticut—1997 24-hour $PM_{2.5}$ NAAQS (Primary and Secondary)'' and ''Connecticut—2006 24-hour $PM_{2.5}$ NAAQS (Primary and Secondary)'' before the table titled ''Connecticut—NO_2 (1971 Annual Standard)''.

The additions read as follows:

§ 81.307 Connecticut.

* * * * *

CONNECTICUT—1997 ANNUAL $PM_{2.5}$ NAAQS

[Primary and secondary]

Designated area	Designation[a]		Classification	
	Date[1]	Type	Date	Type
New York-N. New Jersey-Long Island, NY–NJ–CT:				
Fairfield County	10/24/13	Attainment..		
New Haven County	10/24/13	Attainment..		
Rest of State:				
Hartford County		Unclassifiable/Attainment..		
Litchfield County		Unclassifiable/Attainment..		
Middlesex County		Unclassifiable/Attainment..		
New London County		Unclassifiable/Attainment..		
Tolland County		Unclassifiable/Attainment..		

CONNECTICUT—1997 ANNUAL $PM_{2.5}$ NAAQS—Continued

[Primary and secondary]

Designated area	Designation[a]		Classification	
	Date[1]	Type	Date	Type
Windham County		Unclassifiable/Attainment..		

[a] Includes Indian Country located in each county or area, except as otherwise specified.
[1] This date is 90 days after January 5, 2005, unless otherwise noted.

CONNECTICUT—1997 24-HOUR $PM_{2.5}$ NAAQS

[Primary and secondary]

Designated area	Designation[a]		Classification	
	Date[1]	Type	Date	Type
New York-N. New Jersey-Long Island, NY–NJ–CT:				
Fairfield County		Unclassifiable/Attainment.		
New Haven County		Unclassifiable/Attainment.		
Rest of State:				
Hartford County		Unclassifiable/Attainment.		
Litchfield County		Unclassifiable/Attainment.		
Middlesex County		Unclassifiable/Attainment.		
New London County		Unclassifiable/Attainment.		
Tolland County		Unclassifiable/Attainment.		
Windham County		Unclassifiable/Attainment.		

[a] Includes Indian Country located in each county or area, except as otherwise specified.
[1] This date is 90 days after January 5, 2005, unless otherwise noted

CONNECTICUT—2006 24-HOUR $PM_{2.5}$ NAAQS

[Primary and secondary]

Designated area	Designation[a]		Classification	
	Date[1]	Type	Date	Type
New York-N. New Jersey-Long Island, NY–NJ–CT:				
Fairfield County	10/24/13	Attainment..		
New Haven County	10/24/13	Attainment..		
Rest of State:				
Hartford County		Unclassifiable/Attainment.		
Litchfield County		Unclassifiable/Attainment.		
Middlesex County		Unclassifiable/Attainment.		
New London County		Unclassifiable/Attainment.		
Tolland County		Unclassifiable/Attainment.		
Windham County		Unclassifiable/Attainment.		

[a] Includes Indian Country located in each county or area, except as otherwise specified.
[1] This date is 30 days after November 13, 2009, unless otherwise noted.

* * * * *

■ 9. Section 81.308 is amended as follows:

■ a. By removing the tables titled ''Delaware—$PM_{2.5}$ (Annual NAAQS)'' and ''Delaware—$PM_{2.5}$ [24-hour NAAQS]''.

■ b. By adding three tables titled ''Delaware—1997 Annual $PM_{2.5}$ NAAQS (Primary and Secondary)'' and ''Delaware—1997 24-hour $PM_{2.5}$ NAAQS (Primary and Secondary)'' and ''Delaware—2006 24-hour $PM_{2.5}$ NAAQS (Primary and Secondary)'' before the table titled ''Delaware—NO_2 (1971 Annual Standard)''.

The additions read as follows:

§ 81.308 Delaware.

* * * * *

DELAWARE—1997 ANNUAL $PM_{2.5}$ NAAQS

[Primary and secondary]

Designated area	Designation[a]		Classification	
	Date[1]	Type	Date	Type
Philadelphia-Wilmington, PA–NJ–DE:				
New Castle County		Nonattainment		Moderate.
Southern Delaware Intrastate AQCR:				
Kent County		Unclassifiable/Attainment..		

DELAWARE—1997 ANNUAL $PM_{2.5}$ NAAQS—Continued

[Primary and secondary]

Designated area	Designation[a]		Classification	
	Date[1]	Type	Date	Type
Sussex County		Unclassifiable/Attainment..		

[a] Includes Indian Country located in each county or area, except as otherwise specified.
[1] This date is 90 days after January 5, 2005, unless otherwise noted.
[2] This date is July 2, 2014, unless otherwise noted.

DELAWARE—1997 24-HOUR $PM_{2.5}$ NAAQS

[Primary and econdary]

Designated area	Designation[a]		Classification	
	Date[1]	Type	Date	Type
Philadelphia-Wilmington, PA–NJ–DE:				
New Castle County		Unclassifiable/Attainment..		
Southern Delaware Intrastate AQCR:				
Kent County		Unclassifiable/Attainment..		
Sussex County		Unclassifiable/Attainment..		

[a] Includes Indian Country located in each county or area, except as otherwise specified.
[1] This date is 90 days after January 5, 2005, unless otherwise noted.

DELAWARE—2006 24-HOUR $PM_{2.5}$ NAAQS

[Primary and secondary]

Designated area	Designation[a]		Classification	
	Date[1]	Type	Date	Type
Philadelphia-Wilmington, PA–NJ–DE:				
New Castle County		Nonattainment		Moderate.
Southern Delaware Intrastate AQCR:				
Kent County		Unclassifiable/Attainment..		
Sussex County		Unclassifiable/Attainment..		

[a] Includes Indian Country located in each county or area, except as otherwise specified.
[1] This date is 30 days after November 13, 2009, unless otherwise noted.
[2] This date is July 2, 2014, unless otherwise noted.

* * * * *

■ 10. Section 81.309 is amended as follows:

■ a. By removing the tables titled ''District of Columbia—$PM_{2.5}$ (Annual NAAQS)'' and ''District of Columbia—$PM_{2.5}$ [24-hour NAAQS]''.

■ b. By adding three tables titled ''District of Columbia—1997 Annual $PM_{2.5}$ NAAQS (Primary and Secondary)'' and ''District of Columbia—1997 24-hour $PM_{2.5}$ NAAQS (Primary and Secondary)'' and ''District of Columbia—2006 24-hour $PM_{2.5}$ NAAQS (Primary and Secondary)'' before the table titled ''District of Columbia—NO_2 (1971 Annual Standard)''.

The additions read as follows:

§ 81.309 District of Columbia.

* * * * *

DISTRICT OF COLUMBIA—1997 ANNUAL $PM_{2.5}$ NAAQS

[Primary and secondary]

Designated area	Designation[a]		Classification	
	Date[1]	Type	Date	Type
Washington, DC–MD–VA:				
District of Columbia		Nonattainment		Moderate.

[a] Includes Indian Country located in each county or area, except as otherwise specified.
[1] This date is 90 days after January 5, 2005, unless otherwise noted.
[2] This date is July 2, 2014, unless otherwise noted.

DISTRICT OF COLUMBIA—1997 24-HOUR $PM_{2.5}$ NAAQS

[Primary and secondary]

Designated area	Designation[a]		Classification	
	Date[1]	Type	Date	Type
AQCR 047 National Capital Interstate (DC–MD–VA) (part)				
District of Columbia		Unclassifiable/Attainment..		

[a] Includes Indian Country located in each county or area, except as otherwise specified.
[1] This date is 90 days after January 5, 2005, unless otherwise noted.

DISTRICT OF COLUMBIA—2006 24-HOUR $PM_{2.5}$ NAAQS

[Primary and secondary]

Designated area	Designation[a]		Classification	
	Date[1]	Type	Date	Type
AQCR 047 National Capital Interstate (DC–MD–VA) (part)				
District of Columbia		Unclassifiable/Attainment..		

[a] Includes Indian Country located in each county or area, except as otherwise specified.
[1] This date is 30 days after November 13, 2009, unless otherwise noted.

* * * * *

■ 11. Section 81.310 is amended as follows:

■ a. By removing the tables titled ''Florida—$PM_{2.5}$ (Annual NAAQS)'' and ''Florida—$PM_{2.5}$ [24-hour NAAQS]''.

■ b. By adding three tables titled ''Florida—1997 Annual $PM_{2.5}$ NAAQS (Primary and Secondary)'' and ''Florida—1997 24-hour $PM_{2.5}$ NAAQS (Primary and Secondary)'' and ''Florida—2006 24-hour $PM_{2.5}$ NAAQS (Primary and Secondary)'' before the table titled ''Florida—NO_2 (1971 Annual Standard)''.

The additions read as follows:

§ 81.310 Florida.

* * * * *

FLORIDA—1997 ANNUAL $PM_{2.5}$ NAAQS

[Primary and secondary]

Designated area	Designation[a]		Classification	
	Date[1]	Type	Date	Type
Statewide:				
Alachua County		Unclassifiable/Attainment.		
Baker County		Unclassifiable/Attainment.		
Bay County		Unclassifiable/Attainment.		
Bradford County		Unclassifiable/Attainment.		
Brevard County		Unclassifiable/Attainment.		
Broward County		Unclassifiable/Attainment.		
Calhoun County		Unclassifiable/Attainment.		
Charlotte County		Unclassifiable/Attainment.		
Citrus County		Unclassifiable/Attainment.		
Clay County		Unclassifiable/Attainment.		
Collier County		Unclassifiable/Attainment.		
Columbia County		Unclassifiable/Attainment.		
DeSoto County		Unclassifiable/Attainment.		
Dixie County		Unclassifiable/Attainment.		
Duval County		Unclassifiable/Attainment.		
Escambia County		Unclassifiable/Attainment.		
Flagler County		Unclassifiable/Attainment.		
Franklin County		Unclassifiable/Attainment.		
Gadsden County		Unclassifiable/Attainment.		
Gilchrist County		Unclassifiable/Attainment.		
Glades County		Unclassifiable/Attainment.		
Gulf County		Unclassifiable/Attainment.		
Hamilton County		Unclassifiable/Attainment.		
Hardee County		Unclassifiable/Attainment.		
Hendry County		Unclassifiable/Attainment.		
Hernando County		Unclassifiable/Attainment.		
Highlands County		Unclassifiable/Attainment.		
Hillsborough County		Unclassifiable/Attainment.		
Holmes County		Unclassifiable/Attainment.		
Indian River County		Unclassifiable/Attainment.		
Jackson County		Unclassifiable/Attainment.		
Jefferson County		Unclassifiable/Attainment.		
Lafayette County		Unclassifiable/Attainment.		

FLORIDA—1997 ANNUAL $PM_{2.5}$ NAAQS—Continued

[Primary and secondary]

Designated area	Designation [a]		Classification	
	Date [1]	Type	Date	Type
Lake County		Unclassifiable/Attainment.		
Lee County		Unclassifiable/Attainment.		
Leon County		Unclassifiable/Attainment.		
Levy County		Unclassifiable/Attainment.		
Liberty County		Unclassifiable/Attainment.		
Madison County		Unclassifiable/Attainment.		
Manatee County		Unclassifiable/Attainment.		
Marion County		Unclassifiable/Attainment.		
Martin County		Unclassifiable/Attainment.		
Miami-Dade County		Unclassifiable/Attainment.		
Monroe County		Unclassifiable/Attainment.		
Nassau County		Unclassifiable/Attainment.		
Okaloosa County		Unclassifiable/Attainment.		
Okeechobee County		Unclassifiable/Attainment.		
Orange County		Unclassifiable/Attainment.		
Osceola County		Unclassifiable/Attainment.		
Palm Beach County		Unclassifiable/Attainment.		
Pasco County		Unclassifiable/Attainment.		
Pinellas County		Unclassifiable/Attainment.		
Polk County		Unclassifiable/Attainment.		
Putnam County		Unclassifiable/Attainment.		
St. Johns County		Unclassifiable/Attainment.		
St. Lucie County		Unclassifiable/Attainment.		
Santa Rosa County		Unclassifiable/Attainment.		
Sarasota County		Unclassifiable/Attainment.		
Seminole County		Unclassifiable/Attainment.		
Sumter County		Unclassifiable/Attainment.		
Suwannee County		Unclassifiable/Attainment.		
Taylor County		Unclassifiable/Attainment.		
Union County		Unclassifiable/Attainment.		
Volusia County		Unclassifiable/Attainment.		
Wakulla County		Unclassifiable/Attainment.		
Walton County		Unclassifiable/Attainment.		
Washington County		Unclassifiable/Attainment.		

[a] Includes Indian Country located in each county or area, except as otherwise specified.
[1] This date is 90 days after January 5, 2005, unless otherwise noted.

FLORIDA—1997 24-HOUR $PM_{2.5}$ NAAQS

[Primary and secondary]

Designated area	Designation [a]		Classification	
	Date [1]	Type	Date	Type
Statewide:				
Alachua County		Unclassifiable/Attainment.		
Baker County		Unclassifiable/Attainment.		
Bay County		Unclassifiable/Attainment.		
Bradford County		Unclassifiable/Attainment.		
Brevard County		Unclassifiable/Attainment.		
Broward County		Unclassifiable/Attainment.		
Calhoun County		Unclassifiable/Attainment.		
Charlotte County		Unclassifiable/Attainment.		
Citrus County		Unclassifiable/Attainment.		
Clay County		Unclassifiable/Attainment.		
Collier County		Unclassifiable/Attainment.		
Columbia County		Unclassifiable/Attainment.		
DeSoto County		Unclassifiable/Attainment.		
Dixie County		Unclassifiable/Attainment.		
Duval County		Unclassifiable/Attainment.		
Escambia County		Unclassifiable/Attainment.		
Flagler County		Unclassifiable/Attainment.		
Franklin County		Unclassifiable/Attainment.		
Gadsden County		Unclassifiable/Attainment.		
Gilchrist County		Unclassifiable/Attainment.		
Glades County		Unclassifiable/Attainment.		
Gulf County		Unclassifiable/Attainment.		
Hamilton County		Unclassifiable/Attainment.		

FLORIDA—1997 24-HOUR $PM_{2.5}$ NAAQS—Continued

[Primary and secondary]

Designated area	Designation [a]		Classification	
	Date [1]	Type	Date	Type
Hardee County		Unclassifiable/Attainment.		
Hendry County		Unclassifiable/Attainment.		
Hernando County		Unclassifiable/Attainment.		
Highlands County		Unclassifiable/Attainment.		
Hillsborough County		Unclassifiable/Attainment.		
Holmes County		Unclassifiable/Attainment.		
Indian River County		Unclassifiable/Attainment.		
Jackson County		Unclassifiable/Attainment.		
Jefferson County		Unclassifiable/Attainment.		
Lafayette County		Unclassifiable/Attainment.		
Lake County		Unclassifiable/Attainment.		
Lee County		Unclassifiable/Attainment.		
Leon County		Unclassifiable/Attainment.		
Levy County		Unclassifiable/Attainment.		
Liberty County		Unclassifiable/Attainment.		
Madison County		Unclassifiable/Attainment.		
Manatee County		Unclassifiable/Attainment.		
Marion County		Unclassifiable/Attainment.		
Martin County		Unclassifiable/Attainment.		
Miami-Dade County		Unclassifiable/Attainment.		
Monroe County		Unclassifiable/Attainment.		
Nassau County		Unclassifiable/Attainment.		
Okaloosa County		Unclassifiable/Attainment.		
Okeechobee County		Unclassifiable/Attainment.		
Orange County		Unclassifiable/Attainment.		
Osceola County		Unclassifiable/Attainment.		
Palm Beach County		Unclassifiable/Attainment.		
Pasco County		Unclassifiable/Attainment.		
Pinellas County		Unclassifiable/Attainment.		
Polk County		Unclassifiable/Attainment.		
Putnam County		Unclassifiable/Attainment.		
St. Johns County		Unclassifiable/Attainment.		
St. Lucie County		Unclassifiable/Attainment.		
Santa Rosa County		Unclassifiable/Attainment.		
Sarasota County		Unclassifiable/Attainment.		
Seminole County		Unclassifiable/Attainment.		
Sumter County		Unclassifiable/Attainment.		
Suwannee County		Unclassifiable/Attainment.		
Taylor County		Unclassifiable/Attainment.		
Union County		Unclassifiable/Attainment.		
Volusia County		Unclassifiable/Attainment.		
Wakulla County		Unclassifiable/Attainment.		
Walton County		Unclassifiable/Attainment.		
Washington County		Unclassifiable/Attainment.		

[a] Includes Indian Country located in each county or area, except as otherwise specified.
[1] This date is 90 days after January 5, 2005, unless otherwise noted.

FLORIDA—2006 24-HOUR $PM_{2.5}$ NAAQS

[Primary and secondary]

Designated area	Designation [a]		Classification	
	Date [1]	Type	Date	Type
Statewide:				
Alachua County		Unclassifiable/Attainement.		
Baker County		Unclassifiable/Attainement.		
Bay County		Unclassifiable/Attainement.		
Bradford County		Unclassifiable/Attainement.		
Brevard County		Unclassifiable/Attainement.		
Broward County		Unclassifiable/Attainement.		
Calhoun County		Unclassifiable/Attainement.		
Charlotte County		Unclassifiable/Attainement.		
Citrus County		Unclassifiable/Attainement.		
Clay County		Unclassifiable/Attainement.		
Collier County		Unclassifiable/Attainement.		
Columbia County		Unclassifiable/Attainement.		
DeSoto County		Unclassifiable/Attainement.		

FLORIDA—2006 24-HOUR $PM_{2.5}$ NAAQS—Continued

[Primary and secondary]

Designated area	Designation [a]		Classification	
	Date [1]	Type	Date	Type
Dixie County		Unclassifiable/Attainement.		
Duval County		Unclassifiable/Attainement.		
Escambia County		Unclassifiable/Attainement.		
Flagler County		Unclassifiable/Attainement.		
Franklin County		Unclassifiable/Attainement.		
Gadsden County		Unclassifiable/Attainement.		
Gilchrist County		Unclassifiable/Attainement.		
Glades County		Unclassifiable/Attainement.		
Gulf County		Unclassifiable/Attainement.		
Hamilton County		Unclassifiable/Attainement.		
Hardee County		Unclassifiable/Attainement.		
Hendry County		Unclassifiable/Attainement.		
Hernando County		Unclassifiable/Attainement.		
Highlands County		Unclassifiable/Attainement.		
Hillsborough County		Unclassifiable/Attainement.		
Holmes County		Unclassifiable/Attainement.		
Indian River County		Unclassifiable/Attainement.		
Jackson County		Unclassifiable/Attainement.		
Jefferson County		Unclassifiable/Attainement.		
Lafayette County		Unclassifiable/Attainement.		
Lake County		Unclassifiable/Attainement.		
Lee County		Unclassifiable/Attainement.		
Leon County		Unclassifiable/Attainement.		
Levy County		Unclassifiable/Attainement.		
Liberty County		Unclassifiable/Attainement.		
Madison County		Unclassifiable/Attainement.		
Manatee County		Unclassifiable/Attainement.		
Marion County		Unclassifiable/Attainement.		
Martin County		Unclassifiable/Attainement.		
Miami-Dade County		Unclassifiable/Attainement.		
Monroe County		Unclassifiable/Attainement.		
Nassau County		Unclassifiable/Attainement.		
Okaloosa County		Unclassifiable/Attainement.		
Okeechobee County		Unclassifiable/Attainement.		
Orange County		Unclassifiable/Attainement.		
Osceola County		Unclassifiable/Attainement.		
Palm Beach County		Unclassifiable/Attainement.		
Pasco County		Unclassifiable/Attainement.		
Pinellas County		Unclassifiable/Attainement.		
Polk County		Unclassifiable/Attainement.		
Putnam County		Unclassifiable/Attainement.		
St. Johns County		Unclassifiable/Attainement.		
St. Lucie County		Unclassifiable/Attainement.		
Santa Rosa County		Unclassifiable/Attainement.		
Sarasota County		Unclassifiable/Attainement.		
Seminole County		Unclassifiable/Attainement.		
Sumter County		Unclassifiable/Attainement.		
Suwannee County		Unclassifiable/Attainement.		
Taylor County		Unclassifiable/Attainement.		
Union County		Unclassifiable/Attainement.		
Volusia County		Unclassifiable/Attainement.		
Wakulla County		Unclassifiable/Attainement.		
Walton County		Unclassifiable/Attainement.		
Washington County		Unclassifiable/Attainement.		

[a] Includes Indian Country located in each county or area, except as otherwise specified.
[1] This date is 30 days after November 13, 2009, unless otherwise noted.

* * * * *

■ 12. Section 81.311 is amended as follows:

■ a. By removing the tables titled ''Georgia—$PM_{2.5}$ (Annual NAAQS)'' and ''Georgia—$PM_{2.5}$ [24-hour NAAQS]''.

■ b. By adding three tables titled ''Georgia—1997 Annual $PM_{2.5}$ NAAQS (Primary and Secondary)'' and ''Georgia—1997 24-hour $PM_{2.5}$ NAAQS (Primary and Secondary)'' and ''Georgia—2006 24-hour $PM_{2.5}$ NAAQS (Primary and Secondary)'' before the table titled ''Georgia—NO_2 (1971 Annual Standard)'' .

The additions read as follows:

§ 81.311 Georgia.

* * * * *

GEORGIA—1997 ANNUAL $PM_{2.5}$ NAAQS

[Primary and secondary]

Designated area	Designation [a]		Classification	
	Date [1]	Type	Date [2]	Type
Atlanta, GA:				
Barrow County		Nonattainment		Moderate.
Bartow County		Nonattainment		Moderate.
Carroll County		Nonattainment		Moderate.
Cherokee County		Nonattainment		Moderate.
Clayton County		Nonattainment		Moderate.
Cobb County		Nonattainment		Moderate.
Coweta County		Nonattainment		Moderate.
DeKalb County		Nonattainment		Moderate.
Douglas County		Nonattainment		Moderate.
Fayette County		Nonattainment		Moderate.
Forsyth County		Nonattainment		Moderate.
Fulton County		Nonattainment		Moderate.
Gwinnett County		Nonattainment		Moderate.
Hall County		Nonattainment		Moderate.
Heard County (part)		Nonattainment		Moderate.
The northeast portion that extends north of 33 degrees 24 minutes (north) to the Carroll County border and east of 85 degrees 3 minutes (west) to the Coweta County border.				
Henry County		Nonattainment		Moderate.
Newton County		Nonattainment		Moderate.
Paulding County		Nonattainment		Moderate.
Putnam County (part)		Nonattainment		Moderate.
The area described by U.S. Census 2000 block group identifier 13–237–9603–1.				
Rockdale County		Nonattainment		Moderate.
Spalding County		Nonattainment		Moderate.
Walton County		Nonattainment		Moderate.
Chattanooga, TN-GA:				
Catoosa County		Nonattainment		Moderate.
Walker County		Nonattainment		Moderate.
Rome, GA:				
Floyd County		Nonattainment		Moderate.
Macon, GA:				
Bibb County		Nonattainment		Moderate.
Monroe County (part)		Nonattainment		Moderate.
From the point where Bibb and Monroe Counties meet at U.S. Hwy 23/Georgia Hwy 98 follow the Bibb/Monroe County line westward 150′ from the U.S. Hwy 23/Georgia Hwy 87 centerline, proceed northward 150′ west of and parallel to the U.S. Hwy 23/Georgia Hwy 87 centerline to 33 degrees, 04 minutes, 30 seconds; proceed westward to 83 degrees, 49 minutes, 45 seconds; proceed due south to 150′ north of the Georgia Hwy 18 centerline, proceed eastward 150′ north of and parallel to the Georgia Hwy 18 centerline to 1150′ west of the U.S. Hwy 23/Georgia Hwy 87 centerline, proceed southward 1150′ west of and parallel to the U.S. Hwy 23/Georgia Hwy 87 centerline to the Monroe/Bibb County line; then follow the Monroe/Bibb County line to 150′ west of the U.S. Hwy 23/Georgia Hwy 87 centerline.				
Rest of State:				
Appling County		Unclassifiable/Attainment.		
Atkinson County		Unclassifiable/Attainment.		
Bacon County		Unclassifiable/Attainment.		
Baker County		Unclassifiable/Attainment.		
Baldwin County		Unclassifiable/Attainment.		
Banks County		Unclassifiable/Attainment.		
Ben Hill County		Unclassifiable/Attainment.		
Berrien County		Unclassifiable/Attainment.		
Bleckley County		Unclassifiable/Attainment.		
Brantley County		Unclassifiable/Attainment.		
Brooks County		Unclassifiable/Attainment.		
Bryan County		Unclassifiable/Attainment.		
Bulloch County		Unclassifiable/Attainment.		
Burke County		Unclassifiable/Attainment.		

GEORGIA—1997 ANNUAL $PM_{2.5}$ NAAQS—Continued

[Primary and secondary]

Designated area	Designation [a]		Classification	
	Date [1]	Type	Date [2]	Type
Butts County		Unclassifiable/Attainment.		
Calhoun County		Unclassifiable/Attainment.		
Camden County		Unclassifiable/Attainment.		
Candler County		Unclassifiable/Attainment.		
Charlton County		Unclassifiable/Attainment.		
Chatham County		Unclassifiable/Attainment.		
Chattahoochee County		Unclassifiable/Attainment.		
Chattooga County		Unclassifiable/Attainment.		
Clarke County		Unclassifiable/Attainment.		
Clay County		Unclassifiable/Attainment.		
Clinch County		Unclassifiable/Attainment.		
Coffee County		Unclassifiable/Attainment.		
Colquitt County		Unclassifiable/Attainment.		
Columbia County		Unclassifiable/Attainment.		
Cook County		Unclassifiable/Attainment.		
Crawford County		Unclassifiable/Attainment.		
Crisp County		Unclassifiable/Attainment.		
Dade County		Unclassifiable/Attainment.		
Dawson County		Unclassifiable/Attainment.		
Decatur County		Unclassifiable/Attainment.		
Dodge County		Unclassifiable/Attainment.		
Dooly County		Unclassifiable/Attainment.		
Dougherty County		Unclassifiable/Attainment.		
Early County		Unclassifiable/Attainment.		
Echols County		Unclassifiable/Attainment.		
Effingham County		Unclassifiable/Attainment.		
Elbert County		Unclassifiable/Attainment.		
Emanuel County		Unclassifiable/Attainment.		
Evans County		Unclassifiable/Attainment.		
Fannin County		Unclassifiable/Attainment.		
Franklin County		Unclassifiable/Attainment.		
Gilmer County		Unclassifiable/Attainment.		
Glascock County		Unclassifiable/Attainment.		
Glynn County		Unclassifiable/Attainment.		
Gordon County		Unclassifiable/Attainment.		
Grady County		Unclassifiable/Attainment.		
Greene County		Unclassifiable/Attainment.		
Habersham County		Unclassifiable/Attainment.		
Hancock County		Unclassifiable/Attainment.		
Haralson County		Unclassifiable/Attainment.		
Harris County		Unclassifiable/Attainment.		
Hart County		Unclassifiable/Attainment.		
Heard County (remainder)		Unclassifiable/Attainment.		
Houston County		Unclassifiable/Attainment.		
Irwin County		Unclassifiable/Attainment.		
Jackson County		Unclassifiable/Attainment.		
Jasper County		Unclassifiable/Attainment.		
Jeff Davis County		Unclassifiable/Attainment.		
Jefferson County		Unclassifiable/Attainment.		
Jenkins County		Unclassifiable/Attainment.		
Johnson County		Unclassifiable/Attainment.		
Jones County		Unclassifiable/Attainment.		
Lamar County		Unclassifiable/Attainment.		
Lanier County		Unclassifiable/Attainment.		
Laurens County		Unclassifiable/Attainment.		
Lee County		Unclassifiable/Attainment.		
Liberty County		Unclassifiable/Attainment.		
Lincoln County		Unclassifiable/Attainment.		
Long County		Unclassifiable/Attainment.		
Lowndes County		Unclassifiable/Attainment.		
Lumpkin County		Unclassifiable/Attainment.		
McDuffie County		Unclassifiable/Attainment.		
McIntosh County		Unclassifiable/Attainment.		
Macon County		Unclassifiable/Attainment.		
Madison County		Unclassifiable/Attainment.		
Marion County		Unclassifiable/Attainment.		
Meriwether County		Unclassifiable/Attainment.		
Miller County		Unclassifiable/Attainment.		
Mitchell County		Unclassifiable/Attainment.		

GEORGIA—1997 ANNUAL $PM_{2.5}$ NAAQS—Continued

[Primary and secondary]

Designated area	Designation [a]		Classification	
	Date [1]	Type	Date [2]	Type
Monroe County (remainder)		Unclassifiable/Attainment.		
Montgomery County		Unclassifiable/Attainment.		
Morgan County		Unclassifiable/Attainment.		
Murray County		Unclassifiable/Attainment.		
Muscogee County		Unclassifiable/Attainment.		
Oconee County		Unclassifiable/Attainment.		
Oglethorpe County		Unclassifiable/Attainment.		
Peach County		Unclassifiable/Attainment.		
Pickens County		Unclassifiable/Attainment.		
Pierce County		Unclassifiable/Attainment.		
Pike County		Unclassifiable/Attainment.		
Polk County		Unclassifiable/Attainment.		
Pulaski County		Unclassifiable/Attainment.		
Putnam County (remainder)		Unclassifiable/Attainment.		
Quitman County		Unclassifiable/Attainment.		
Rabun County		Unclassifiable/Attainment.		
Randolph County		Unclassifiable/Attainment.		
Richmond County		Unclassifiable/Attainment.		
Schley County		Unclassifiable/Attainment.		
Screven County		Unclassifiable/Attainment.		
Seminole County		Unclassifiable/Attainment.		
Stephens County		Unclassifiable/Attainment.		
Stewart County		Unclassifiable/Attainment.		
Sumter County		Unclassifiable/Attainment.		
Talbot County		Unclassifiable/Attainment.		
Taliaferro County		Unclassifiable/Attainment.		
Tattnall County		Unclassifiable/Attainment.		
Taylor County		Unclassifiable/Attainment.		
Telfair County		Unclassifiable/Attainment.		
Terrell County		Unclassifiable/Attainment.		
Thomas County		Unclassifiable/Attainment.		
Tift County		Unclassifiable/Attainment.		
Toombs County		Unclassifiable/Attainment.		
Towns County		Unclassifiable/Attainment.		
Treutlen County		Unclassifiable/Attainment.		
Troup County		Unclassifiable/Attainment.		
Turner County		Unclassifiable/Attainment.		
Twiggs County		Unclassifiable/Attainment.		
Union County		Unclassifiable/Attainment.		
Upson County		Unclassifiable/Attainment.		
Ware County		Unclassifiable/Attainment.		
Warren County		Unclassifiable/Attainment.		
Washington County		Unclassifiable/Attainment.		
Wayne County		Unclassifiable/Attainment.		
Webster County		Unclassifiable/Attainment.		
Wheeler County		Unclassifiable/Attainment.		
White County		Unclassifiable/Attainment.		
Whitfield County		Unclassifiable/Attainment.		
Wilcox County		Unclassifiable/Attainment.		
Wilkes County		Unclassifiable/Attainment.		
Wilkinson County		Unclassifiable/Attainment.		
Worth County		Unclassifiable/Attainment.		

[a] Includes Indian Country located in each county or area, except as otherwise specified.
[1] This date is 90 days after January 5, 2005, unless otherwise noted.
[2] This date is July 2, 2014, unless otherwise noted.

GEORGIA—1997 24-HOUR $PM_{2.5}$ NAAQS

[Primary and secondary]

Designated area	Designation [a]		Classification	
	Date [1]	Type	Date	Type
Statewide:				
Appling County		Unclassifiable/Attainment.		
Atkinson County		Unclassifiable/Attainment.		
Bacon County		Unclassifiable/Attainment.		
Baker County		Unclassifiable/Attainment.		

GEORGIA—1997 24-HOUR $PM_{2.5}$ NAAQS—Continued

[Primary and secondary]

Designated area	Designation [a]		Classification	
	Date [1]	Type	Date	Type
Baldwin County		Unclassifiable/Attainment.		
Banks County		Unclassifiable/Attainment.		
Barrow County		Unclassifiable/Attainment.		
Bartow County		Unclassifiable/Attainment.		
Ben Hill County		Unclassifiable/Attainment.		
Berrien County		Unclassifiable/Attainment.		
Bibb County		Unclassifiable/Attainment.		
Bleckley County		Unclassifiable/Attainment.		
Brantley County		Unclassifiable/Attainment.		
Brooks County		Unclassifiable/Attainment.		
Bryan County		Unclassifiable/Attainment.		
Bulloch County		Unclassifiable/Attainment.		
Burke County		Unclassifiable/Attainment.		
Butts County		Unclassifiable/Attainment.		
Calhoun County		Unclassifiable/Attainment.		
Camden County		Unclassifiable/Attainment.		
Candler County		Unclassifiable/Attainment.		
Carroll County		Unclassifiable/Attainment.		
Catoosa County		Unclassifiable/Attainment.		
Charlton County		Unclassifiable/Attainment.		
Chatham County		Unclassifiable/Attainment.		
Chattahoochee County		Unclassifiable/Attainment.		
Chattooga County		Unclassifiable/Attainment.		
Cherokee County		Unclassifiable/Attainment.		
Clarke County		Unclassifiable/Attainment.		
Clay County		Unclassifiable/Attainment.		
Clayton County		Unclassifiable/Attainment.		
Clinch County		Unclassifiable/Attainment.		
Cobb County		Unclassifiable/Attainment.		
Coffee County		Unclassifiable/Attainment.		
Colquitt County		Unclassifiable/Attainment.		
Columbia County		Unclassifiable/Attainment.		
Cook County		Unclassifiable/Attainment.		
Coweta County		Unclassifiable/Attainment.		
Crawford County		Unclassifiable/Attainment.		
Crisp County		Unclassifiable/Attainment.		
Dade County		Unclassifiable/Attainment.		
Dawson County		Unclassifiable/Attainment.		
Decatur County		Unclassifiable/Attainment.		
DeKalb County		Unclassifiable/Attainment.		
Dodge County		Unclassifiable/Attainment.		
Dooly County		Unclassifiable/Attainment.		
Dougherty County		Unclassifiable/Attainment.		
Douglass County		Unclassifiable/Attainment.		
Early County		Unclassifiable/Attainment.		
Echols County		Unclassifiable/Attainment.		
Effingham County		Unclassifiable/Attainment.		
Elbert County		Unclassifiable/Attainment.		
Emanuel County		Unclassifiable/Attainment.		
Evans County		Unclassifiable/Attainment.		
Fannin County		Unclassifiable/Attainment.		
Fayette County		Unclassifiable/Attainment.		
Floyd County		Unclassifiable/Attainment.		
Forsyth County		Unclassifiable/Attainment.		
Franklin County		Unclassifiable/Attainment.		
Fulton County		Unclassifiable/Attainment.		
Gilmer County		Unclassifiable/Attainment.		
Glascock County		Unclassifiable/Attainment.		
Glynn County		Unclassifiable/Attainment.		
Gordon County		Unclassifiable/Attainment.		
Grady County		Unclassifiable/Attainment.		
Greene County		Unclassifiable/Attainment.		
Gwinnett County		Unclassifiable/Attainment.		
Habersham County		Unclassifiable/Attainment.		
Hall County		Unclassifiable/Attainment.		
Hancock County		Unclassifiable/Attainment.		
Haralson County		Unclassifiable/Attainment.		
Harris County		Unclassifiable/Attainment.		
Hart County		Unclassifiable/Attainment.		

GEORGIA—1997 24-HOUR $PM_{2.5}$ NAAQS—Continued

[Primary and secondary]

Designated area	Designation [a]		Classification	
	Date [1]	Type	Date	Type
Heard County		Unclassifiable/Attainment.		
Henry County		Unclassifiable/Attainment.		
Houston County		Unclassifiable/Attainment.		
Irwin County		Unclassifiable/Attainment.		
Jackson County		Unclassifiable/Attainment.		
Jasper County		Unclassifiable/Attainment.		
Jeff Davis County		Unclassifiable/Attainment.		
Jefferson County		Unclassifiable/Attainment.		
Jenkins County		Unclassifiable/Attainment.		
Johnson County		Unclassifiable/Attainment.		
Jones County		Unclassifiable/Attainment.		
Lamar County		Unclassifiable/Attainment.		
Lanier County		Unclassifiable/Attainment.		
Laurens County		Unclassifiable/Attainment.		
Lee County		Unclassifiable/Attainment.		
Liberty County		Unclassifiable/Attainment.		
Lincoln County		Unclassifiable/Attainment.		
Long County		Unclassifiable/Attainment.		
Lowdes County		Unclassifiable/Attainment.		
Lumpkin County		Unclassifiable/Attainment.		
McDuffie County		Unclassifiable/Attainment.		
McIntosh County		Unclassifiable/Attainment.		
Macon County		Unclassifiable/Attainment.		
Madison County		Unclassifiable/Attainment.		
Marion County		Unclassifiable/Attainment.		
Meriwether County		Unclassifiable/Attainment.		
Miller County		Unclassifiable/Attainment.		
Mitchell County		Unclassifiable/Attainment.		
Monroe County		Unclassifiable/Attainment.		
Montgomery County		Unclassifiable/Attainment.		
Morgan County		Unclassifiable/Attainment.		
Murray County		Unclassifiable/Attainment.		
Muscogee County		Unclassifiable/Attainment.		
Newton County		Unclassifiable/Attainment.		
Oconee County		Unclassifiable/Attainment.		
Oglethorpe County		Unclassifiable/Attainment.		
Pauling County		Unclassifiable/Attainment.		
Peach County		Unclassifiable/Attainment.		
Pickens County		Unclassifiable/Attainment.		
Pierce County		Unclassifiable/Attainment.		
Pike County		Unclassifiable/Attainment.		
Polk County		Unclassifiable/Attainment.		
Pulaski County		Unclassifiable/Attainment.		
Putnam County		Unclassifiable/Attainment.		
Quitman County		Unclassifiable/Attainment.		
Rabun County		Unclassifiable/Attainment.		
Randolph County		Unclassifiable/Attainment.		
Richmond County		Unclassifiable/Attainment.		
Rockdale County		Unclassifiable/Attainment.		
Schley County		Unclassifiable/Attainment.		
Screven County		Unclassifiable/Attainment.		
Seminole County		Unclassifiable/Attainment.		
Spalding County		Unclassifiable/Attainment.		
Stephens County		Unclassifiable/Attainment.		
Stewart County		Unclassifiable/Attainment.		
Sumter County		Unclassifiable/Attainment.		
Talbot County		Unclassifiable/Attainment.		
Taliaferro County		Unclassifiable/Attainment.		
Tattnall County		Unclassifiable/Attainment.		
Taylor County		Unclassifiable/Attainment.		
Telfair County		Unclassifiable/Attainment.		
Terrell County		Unclassifiable/Attainment.		
Thomas County		Unclassifiable/Attainment.		
Tift County		Unclassifiable/Attainment.		
Toombs County		Unclassifiable/Attainment.		
Towns County		Unclassifiable/Attainment.		
Treutlen County		Unclassifiable/Attainment.		
Troup County		Unclassifiable/Attainment.		
Turner County		Unclassifiable/Attainment.		

GEORGIA—1997 24-HOUR $PM_{2.5}$ NAAQS—Continued

[Primary and secondary]

Designated area	Designation [a]		Classification	
	Date [1]	Type	Date	Type
Twiggs County		Unclassifiable/Attainment.		
Union County		Unclassifiable/Attainment.		
Upson County		Unclassifiable/Attainment.		
Walker County		Unclassifiable/Attainment.		
Walton County		Unclassifiable/Attainment.		
Ware County		Unclassifiable/Attainment.		
Warren County		Unclassifiable/Attainment.		
Washington County		Unclassifiable/Attainment.		
Wayne County		Unclassifiable/Attainment.		
Webster County		Unclassifiable/Attainment.		
Wheeler County		Unclassifiable/Attainment.		
White County		Unclassifiable/Attainment.		
Whitfield County		Unclassifiable/Attainment.		
Wilcox County		Unclassifiable/Attainment.		
Wilkes County		Unclassifiable/Attainment.		
Wilkinson County		Unclassifiable/Attainment.		
Worth County		Unclassifiable/Attainment.		

[a] Includes Indian Country located in each county or area, except as otherwise specified.
[1] This date is 90 days after January 5, 2005, unless otherwise noted.

GEORGIA—2006 24-HOUR $PM_{2.5}$ NAAQS

[Primary and secondary]

Designated area	Designation [a]		Classification	
	Date [1]	Type	Date	Type
Statewide:				
Appling County		Unclassifiable/Attainment		
Atkinson County		Unclassifiable/Attainment		
Bacon County		Unclassifiable/Attainment		
Baker County		Unclassifiable/Attainment		
Baldwin County		Unclassifiable/Attainment		
Banks County		Unclassifiable/Attainment		
Barrow County		Unclassifiable/Attainment		
Bartow County		Unclassifiable/Attainment		
Ben Hill County		Unclassifiable/Attainment		
Berrien County		Unclassifiable/Attainment		
Bibb County		Unclassifiable/Attainment		
Bleckley County		Unclassifiable/Attainment		
Brantley County		Unclassifiable/Attainment		
Brooks County		Unclassifiable/Attainment		
Bryan County		Unclassifiable/Attainment		
Bulloch County		Unclassifiable/Attainment		
Burke County		Unclassifiable/Attainment		
Butts County		Unclassifiable/Attainment		
Calhoun County		Unclassifiable/Attainment		
Camden County		Unclassifiable/Attainment		
Candler County		Unclassifiable/Attainment		
Carroll County		Unclassifiable/Attainment		
Catoosa County		Unclassifiable/Attainment		
Charlton County		Unclassifiable/Attainment		
Chatham County		Unclassifiable/Attainment		
Chattahoochee County		Unclassifiable/Attainment		
Chattooga County		Unclassifiable/Attainment		
Cherokee County		Unclassifiable/Attainment		
Clarke County		Unclassifiable/Attainment		
Clay County		Unclassifiable/Attainment		
Clayton County		Unclassifiable/Attainment		
Clinch County		Unclassifiable/Attainment		
Cobb County		Unclassifiable/Attainment		
Coffee County		Unclassifiable/Attainment		
Colquitt County		Unclassifiable/Attainment		
Columbia County		Unclassifiable/Attainment		
Cook County		Unclassifiable/Attainment		
Coweta County		Unclassifiable/Attainment		
Crawford County		Unclassifiable/Attainment		
Crisp County		Unclassifiable/Attainment		

GEORGIA—2006 24-HOUR $PM_{2.5}$ NAAQS—Continued

[Primary and secondary]

Designated area	Designation [a]		Classification	
	Date [1]	Type	Date	Type
Dade County		Unclassifiable/Attainment		
Dawson County		Unclassifiable/Attainment		
Decatur County		Unclassifiable/Attainment		
DeKalb County		Unclassifiable/Attainment		
Dodge County		Unclassifiable/Attainment		
Dooly County		Unclassifiable/Attainment		
Dougherty County		Unclassifiable/Attainment		
Douglass County		Unclassifiable/Attainment		
Early County		Unclassifiable/Attainment		
Echols County		Unclassifiable/Attainment		
Effingham County		Unclassifiable/Attainment		
Elbert County		Unclassifiable/Attainment		
Emanuel County		Unclassifiable/Attainment		
Evans County		Unclassifiable/Attainment		
Fannin County		Unclassifiable/Attainment		
Fayette County		Unclassifiable/Attainment		
Floyd County		Unclassifiable/Attainment		
Forsyth County		Unclassifiable/Attainment		
Franklin County		Unclassifiable/Attainment		
Fulton County		Unclassifiable/Attainment		
Gilmer County		Unclassifiable/Attainment		
Glascock County		Unclassifiable/Attainment		
Glynn County		Unclassifiable/Attainment		
Gordon County		Unclassifiable/Attainment		
Grady County		Unclassifiable/Attainment		
Greene County		Unclassifiable/Attainment		
Gwinnett County		Unclassifiable/Attainment		
Habersham County		Unclassifiable/Attainment		
Hall County		Unclassifiable/Attainment		
Hancock County		Unclassifiable/Attainment		
Haralson County		Unclassifiable/Attainment		
Harris County		Unclassifiable/Attainment		
Hart County		Unclassifiable/Attainment		
Heard County		Unclassifiable/Attainment		
Henry County		Unclassifiable/Attainment		
Houston County		Unclassifiable/Attainment		
Irwin County		Unclassifiable/Attainment		
Jackson County		Unclassifiable/Attainment		
Jasper County		Unclassifiable/Attainment		
Jeff Davis County		Unclassifiable/Attainment		
Jefferson County		Unclassifiable/Attainment		
Jenkins County		Unclassifiable/Attainment		
Johnson County		Unclassifiable/Attainment		
Jones County		Unclassifiable/Attainment		
Lamar County		Unclassifiable/Attainment		
Lanier County		Unclassifiable/Attainment		
Laurens County		Unclassifiable/Attainment		
Lee County		Unclassifiable/Attainment		
Liberty County		Unclassifiable/Attainment		
Lincoln County		Unclassifiable/Attainment		
Long County		Unclassifiable/Attainment		
Lowdes County		Unclassifiable/Attainment		
Lumpkin County		Unclassifiable/Attainment		
McDuffie County		Unclassifiable/Attainment		
McIntosh County		Unclassifiable/Attainment		
Macon County		Unclassifiable/Attainment		
Madison County		Unclassifiable/Attainment		
Marion County		Unclassifiable/Attainment		
Meriwether County		Unclassifiable/Attainment		
Miller County		Unclassifiable/Attainment		
Mitchell County		Unclassifiable/Attainment		
Monroe County		Unclassifiable/Attainment		
Montgomery County		Unclassifiable/Attainment		
Morgan County		Unclassifiable/Attainment		
Murray County		Unclassifiable/Attainment		
Muscogee County		Unclassifiable/Attainment		
Newton County		Unclassifiable/Attainment		
Oconee County		Unclassifiable/Attainment		
Oglethorpe County		Unclassifiable/Attainment		

GEORGIA—2006 24-HOUR $PM_{2.5}$ NAAQS—Continued

[Primary and secondary]

Designated area	Designation [a]		Classification	
	Date [1]	Type	Date	Type
Pauling County		Unclassifiable/Attainment		
Peach County		Unclassifiable/Attainment		
Pickens County		Unclassifiable/Attainment		
Pierce County		Unclassifiable/Attainment		
Pike County		Unclassifiable/Attainment		
Polk County		Unclassifiable/Attainment		
Pulaski County		Unclassifiable/Attainment		
Putnam County		Unclassifiable/Attainment		
Quitman County		Unclassifiable/Attainment		
Rabun County		Unclassifiable/Attainment		
Randolph County		Unclassifiable/Attainment		
Richmond County		Unclassifiable/Attainment		
Rockdale County		Unclassifiable/Attainment		
Schley County		Unclassifiable/Attainment		
Screven County		Unclassifiable/Attainment		
Seminole County		Unclassifiable/Attainment		
Spalding County		Unclassifiable/Attainment		
Stephens County		Unclassifiable/Attainment		
Stewart County		Unclassifiable/Attainment		
Sumter County		Unclassifiable/Attainment		
Talbot County		Unclassifiable/Attainment		
Taliaferro County		Unclassifiable/Attainment		
Tattnall County		Unclassifiable/Attainment		
Taylor County		Unclassifiable/Attainment		
Telfair County		Unclassifiable/Attainment		
Terrell County		Unclassifiable/Attainment		
Thomas County		Unclassifiable/Attainment		
Tift County		Unclassifiable/Attainment		
Toombs County		Unclassifiable/Attainment		
Towns County		Unclassifiable/Attainment		
Treutlen County		Unclassifiable/Attainment		
Troup County		Unclassifiable/Attainment		
Turner County		Unclassifiable/Attainment		
Twiggs County		Unclassifiable/Attainment		
Union County		Unclassifiable/Attainment		
Upson County		Unclassifiable/Attainment		
Walker County		Unclassifiable/Attainment		
Walton County		Unclassifiable/Attainment		
Ware County		Unclassifiable/Attainment		
Warren County		Unclassifiable/Attainment		
Washington County		Unclassifiable/Attainment		
Wayne County		Unclassifiable/Attainment		
Webster County		Unclassifiable/Attainment		
Wheeler County		Unclassifiable/Attainment		
White County		Unclassifiable/Attainment		
Whitfield County		Unclassifiable/Attainment		
Wilcox County		Unclassifiable/Attainment		
Wilkes County		Unclassifiable/Attainment		
Wilkinson County		Unclassifiable/Attainment		
Worth County		Unclassifiable/Attainment		

[a] Includes Indian Country located in each county or area, except as otherwise specified.
[1] This date is 30 days after November 13, 2009, unless otherwise noted.

* * * * *

■ 13. Section 81.312 is amended as follows:

■ a. By removing the tables titled ''Hawaii—$PM_{2.5}$ (Annual NAAQS)'' and ''Hawaii—$PM_{2.5}$ [24-hour NAAQS]''.

■ b. By adding three tables titled ''Hawaii—1997 Annual $PM_{2.5}$ NAAQS (Primary and Secondary)'' and ''Hawaii—1997 24-hour $PM_{2.5}$ NAAQS (Primary and Secondary)'' and ''Hawaii—2006 24-hour $PM_{2.5}$ NAAQS (Primary and Secondary)'' before the table titled ''Hawaii—NO_2 (1971 Annual Standard)''.

The additions read as follows:

§ 81.312 Hawaii.

* * * * *

HAWAII—1997 ANNUAL $PM_{2.5}$ NAAQS

[Primary and secondary]

Designated area	Designation [a]		Classification	
	Date [1]	Type	Date	Type
Statewide:				
Hawaii County		Unclassifiable/Attainment		
Honolulu County		Unclassifiable/Attainment		
Kalawao County		Unclassifiable/Attainment		
Kauai County		Unclassifiable/Attainment		
Maui County		Unclassifiable/Attainment		

[a] Includes Indian Country located in each county or area, except as otherwise specified.
[1] This date is 90 days after January 5, 2005, unless otherwise noted.

HAWAII—1997 24-HOUR $PM_{2.5}$ NAAQS

[Primary and secondary]

Designated area	Designation [a]		Classification	
	Date [1]	Type	Date	Type
Statewide:				
Hawaii County		Unclassifiable/Attainment		
Honolulu County		Unclassifiable/Attainment		
Kalawao County		Unclassifiable/Attainment		
Kauai County		Unclassifiable/Attainment		
Maui County		Unclassifiable/Attainment		

[a] Includes Indian Country located in each county or area, except as otherwise specified.
[1] This date is 90 days after January 5, 2005, unless otherwise noted.

HAWAII—2006 24-HOUR $PM_{2.5}$ NAAQS

[Primary and secondary]

Designated area	Designation [a]		Classification	
	Date [1]	Type	Date	Type
Statewide:				
Hawaii County		Unclassifiable/Attainment		
Honolulu County		Unclassifiable/Attainment		
Kalawao County		Unclassifiable/Attainment		
Kauai County		Unclassifiable/Attainment		
Maui County		Unclassifiable/Attainment		

[a] Includes Indian Country located in each county or area, except as otherwise specified.
[1] This date is 30 days after November 13, 2009, unless otherwise noted.

* * * * *

■ 14. Section 81.313 is amended as follows:

■ a. By removing the tables titled ''Idaho—$PM_{2.5}$ (Annual NAAQS)'' and ''Idaho—$PM_{2.5}$ [24-hour NAAQS]''.

■ b. By adding three tables titled ''Idaho—1997 Annual $PM_{2.5}$ NAAQS (Primary and Secondary)'' and ''Idaho—1997 24-hour $PM_{2.5}$ NAAQS (Primary and Secondary)'' and ''Idaho—2006 24-hour $PM_{2.5}$ NAAQS (Primary and Secondary)'' before the table titled ''Idaho—NO_2 (1971 Annual Standard)''.

The additions read as follows:

§ 81.313 Idaho.

* * * * *

IDAHO—1997 ANNUAL $PM_{2.5}$ NAAQS

[Primary and secondary]

Designated area	Designation [a]		Classification	
	Date [1]	Type	Date	Type
AQCR 61 Eastern Idaho Intrastate:				
Bannock County		Unclassifiable/Attainment		
Bear Lake County		Unclassifiable/Attainment		
Bingham County		Unclassifiable/Attainment		
Bonneville County		Unclassifiable/Attainment		
Butte County		Unclassifiable/Attainment		
Caribou County		Unclassifiable/Attainment		
Clark County		Unclassifiable/Attainment		
Franklin County		Unclassifiable/Attainment		

IDAHO—1997 ANNUAL $PM_{2.5}$ NAAQS—Continued

[Primary and secondary]

Designated area	Designation [a]		Classification	
	Date [1]	Type	Date	Type
Fremont County		Unclassifiable/Attainment		
Jefferson County		Unclassifiable/Attainment		
Madison County		Unclassifiable/Attainment		
Oneida County		Unclassifiable/Attainment		
Power County		Unclassifiable/Attainment		
Teton County		Unclassifiable/Attainment		
AQCR 62 E Washington-N Idaho Interstate:				
Benewah County		Unclassifiable/Attainment		
Kootenai County		Unclassifiable/Attainment		
Latah County		Unclassifiable/Attainment		
Nez Perce County		Unclassifiable/Attainment		
Shoshone County		Unclassifiable/Attainment		
AQCR 63 Idaho Intrastate:				
Adams County		Unclassifiable/Attainment		
Blaine County		Unclassifiable/Attainment		
Boise County		Unclassifiable/Attainment		
Bonner County		Unclassifiable/Attainment		
Boundary County		Unclassifiable/Attainment		
Camas County		Unclassifiable/Attainment		
Cassia County		Unclassifiable/Attainment		
Clearwater County		Unclassifiable/Attainment		
Custer County		Unclassifiable/Attainment		
Elmore County		Unclassifiable/Attainment		
Gem County		Unclassifiable/Attainment		
Gooding County		Unclassifiable/Attainment		
Idaho County		Unclassifiable/Attainment		
Jerome County		Unclassifiable/Attainment		
Lemhi County		Unclassifiable/Attainment		
Lewis County		Unclassifiable/Attainment		
Lincoln County		Unclassifiable/Attainment		
Minidoka County		Unclassifiable/Attainment		
Owyhee County		Unclassifiable/Attainment		
Payette County		Unclassifiable/Attainment		
Twin Falls County		Unclassifiable/Attainment		
Valley County		Unclassifiable/Attainment		
Washington County		Unclassifiable/Attainment		
AQCR 64 Metropolitan Boise Interstate:				
Ada County		Unclassifiable/Attainment		
Canyon County		Unclassifiable/Attainment		

[a] Includes Indian Country located in each county or area, except as otherwise specified.
[1] This date is 90 days after January 5, 2005, unless otherwise noted.

IDAHO—1997 24-HOUR $PM_{2.5}$ NAAQS

[Primary and secondary]

Designated area	Designation [a]		Classification	
	Date [1]	Type	Date	Type
Logan, UT–ID:				
Franklin County (part)		Unclassifiable/Attainment.		

IDAHO—1997 24-HOUR $PM_{2.5}$ NAAQS—Continued

[Primary and secondary]

Designated area	Designation [a]		Classification	
	Date [1]	Type	Date	Type
Begin in the bottom left corner (southwest) of the nonattainment area boundary, southwest corner of the PLSS-Boise Meridian, Township 16 South, Range 37 East, Section 25. The boundary then proceeds north to the northwest corner of Township 15 South, Range 37 East, Section 25; then the boundary proceeds east to the southeast corner of Township 15 South, Range 38 East, Section 19; then north to the Franklin County boundary at the northwest corner of Township 13 South, Range 38 East, Section 20. From this point the boundary proceeds east 3.5 sections along the northern border of the county boundary where it then turns south 2 sections, and then proceeds east 5 more sections, and then north 2 sections more. At this point, the boundary leaves the county boundary and proceeds east at the southeast corner of Township 13 South, Range 39 East, Section 14; then the boundary heads north 2 sections to northwest corner of Township 13 South, Range 39 East, Section 12; then the boundary proceeds east 2 sections to the northeast corner of Township 13 South, Range 40 East, Section 7. The boundary then proceeds south 2 sections to the northwest corner of Township 13 South, Range 40 East, Section 20; the boundary then proceeds east 6 sections to the northeast corner of Township 13 South, Range 41 East, Section 19. The boundary then proceeds south 20 sections to the southeast corner of Township 16 South, Range 41 East, Section 30. Finally, the boundary is completed as it proceeds west 20 sections along the southern Idaho state boundary to the southwest corner of the Township 16 South, Range 37 East, Section 25.				
Rest of State: AQCR 61 Eastern Idaho Intrastate:				
Bannock County		Unclassifiable/Attainment.		
Bear Lake County		Unclassifiable/Attainment.		
Bingham County		Unclassifiable/Attainment.		
Bonneville County		Unclassifiable/Attainment.		
Butte County		Unclassifiable/Attainment.		
Caribou County		Unclassifiable/Attainment.		
Clark County		Unclassifiable/Attainment.		
Franklin County (remainder)		Unclassifiable/Attainment.		
Fremont County		Unclassifiable/Attainment.		
Jefferson County		Unclassifiable/Attainment.		
Madison County		Unclassifiable/Attainment.		
Oneida County		Unclassifiable/Attainment.		
Power County		Unclassifiable/Attainment.		
Teton County		Unclassifiable/Attainment.		
AQCR 62 E Washington-N Idaho Interstate:				
Benewah County		Unclassifiable/Attainment.		
Kootenai County		Unclassifiable/Attainment.		
Latah County		Unclassifiable/Attainment.		
Nez Perce County		Unclassifiable/Attainment.		
Shoshone County		Unclassifiable/Attainment.		
AQCR 63 Idaho Intrastate:				
Adams County		Unclassifiable/Attainment.		
Blaine County		Unclassifiable/Attainment.		
Boise County		Unclassifiable/Attainment.		
Bonner County		Unclassifiable/Attainment.		
Boundary County		Unclassifiable/Attainment.		
Camas County		Unclassifiable/Attainment.		
Cassia County		Unclassifiable/Attainment.		
Clearwater County		Unclassifiable/Attainment.		
Custer County		Unclassifiable/Attainment.		
Elmore County		Unclassifiable/Attainment.		
Gem County		Unclassifiable/Attainment.		
Gooding County		Unclassifiable/Attainment.		

IDAHO—1997 24-HOUR $PM_{2.5}$ NAAQS—Continued

[Primary and secondary]

Designated area	Designation [a]		Classification	
	Date [1]	Type	Date	Type
Idaho County		Unclassifiable/Attainment.		
Jerome County		Unclassifiable/Attainment.		
Lemhi County		Unclassifiable/Attainment.		
Lewis County		Unclassifiable/Attainment.		
Lincoln County		Unclassifiable/Attainment.		
Minidoka County		Unclassifiable/Attainment.		
Owyhee County		Unclassifiable/Attainment.		
Payette County		Unclassifiable/Attainment.		
Twin Falls County		Unclassifiable/Attainment.		
Valley County		Unclassifiable/Attainment.		
Washington County		Unclassifiable/Attainment.		
AQCR 64 Metropolitan Boise Interstate:				
Ada County		Unclassifiable/Attainment.		
Canyon County		Unclassifiable/Attainment.		

[a] Includes Indian Country located in each county or area, except as otherwise specified.
[1] This date is 90 days after January 5, 2005, unless otherwise noted.

IDAHO—2006 24-HOUR $PM_{2.5}$ NAAQS

[Primary and secondary]

Designated area	Designation [a]		Classification	
	Date [1]	Type	Date [2]	Type
Logan, UT–ID:				
Franklin County (part)		Nonattainment		Moderate.
Begin in the bottom left corner (southwest) of the nonattainment area boundary, southwest corner of the PLSS-Boise Meridian, Township 16 South, Range 37 East, Section 25. The boundary then proceeds north to the northwest corner of Township 15 South, Range 37 East, Section 25; then the boundary proceeds east to the southeast corner of Township 15 South, Range 38 East, Section 19; then north to the Franklin County boundary at the northwest corner of Township 13 South, Range 38 East, Section 20. From this point the boundary proceeds east 3.5 sections along the northern border of the county boundary where it then turns south 2 sections, and then proceeds east 5 more sections, and then north 2 sections more. At this point, the boundary leaves the county boundary and proceeds east at the southeast corner of Township 13 South, Range 39 East, Section 14; then the boundary heads north 2 sections to northwest corner of Township 13 South, Range 39 east, Section 12; then the boundary proceeds east 2 sections to the northeast corner of Township 13 South, Range 40 East, Section 7. The boundary then proceeds south 2 sections to the northwest corner of Township 13 South, Range 40 East, Section 20; the boundary then proceeds east 6 sections to the northeast corner of Township 13 South, Range 41 East, Section 19. The boundary then proceeds south 20 sections to the southeast corner of Township 16 South, Range 41 East, Section 30. Finally, the boundary is completed as it proceeds west 20 sections along the southern Idaho state boundary to the southwest corner of the Township 16 South, Range 37 East, Section 25.				
Rest of State: AQCR 61 Eastern Idaho Intrastate:				
Bannock County		Unclassifiable/Attainment.		
Bear Lake County		Unclassifiable/Attainment.		
Bingham County		Unclassifiable/Attainment.		
Bonneville County		Unclassifiable/Attainment.		
Butte County		Unclassifiable/Attainment.		
Caribou County		Unclassifiable/Attainment.		

IDAHO—2006 24-HOUR $PM_{2.5}$ NAAQS—Continued

[Primary and secondary]

Designated area	Designation [a]		Classification	
	Date [1]	Type	Date [2]	Type
Clark County		Unclassifiable/Attainment.		
Franklin County (remainder)		Unclassifiable/Attainment.		
Fremont County		Unclassifiable/Attainment.		
Jefferson County		Unclassifiable/Attainment.		
Madison County		Unclassifiable/Attainment.		
Oneida County		Unclassifiable/Attainment.		
Power County		Unclassifiable/Attainment.		
Teton County		Unclassifiable/Attainment.		
AQCR 62 E Washington-N Idaho Interstate:				
Benewah County		Unclassifiable/Attainment.		
Kootenai County		Unclassifiable/Attainment.		
Latah County		Unclassifiable/Attainment.		
Nez Perce County		Unclassifiable/Attainment.		
Shoshone County		Unclassifiable/Attainment.		
AQCR 63 Idaho Intrastate:				
Adams County		Unclassifiable/Attainment.		
Blaine County		Unclassifiable/Attainment.		
Boise County		Unclassifiable/Attainment.		
Bonner County		Unclassifiable/Attainment.		
Boundary County		Unclassifiable/Attainment.		
Camas County		Unclassifiable/Attainment.		
Cassia County		Unclassifiable/Attainment.		
Clearwater County		Unclassifiable/Attainment.		
Custer County		Unclassifiable/Attainment.		
Elmore County		Unclassifiable/Attainment.		
Gem County		Unclassifiable/Attainment.		
Gooding County		Unclassifiable/Attainment.		
Idaho County		Unclassifiable/Attainment.		
Jerome County		Unclassifiable/Attainment.		
Lemhi County		Unclassifiable/Attainment.		
Lewis County		Unclassifiable/Attainment.		
Lincoln County		Unclassifiable/Attainment.		
Minidoka County		Unclassifiable/Attainment.		
Owyhee County		Unclassifiable/Attainment.		
Payette County		Unclassifiable/Attainment.		
Twin Falls County		Unclassifiable/Attainment.		
Valley County		Unclassifiable/Attainment.		
Washington County		Unclassifiable/Attainment.		
AQCR 64 Metropolitan Boise Interstate:				
Ada County		Unclassifiable/Attainment.		
Canyon County		Unclassifiable/Attainment.		

[a] Includes Indian Country located in each county or area, except as otherwise specified.
[1] This date is 30 days after November 13, 2009, unless otherwise noted.
[2] This date is July 2, 2014, unless otherwise noted.

* * * * *

■ 15. Section 81.314 is amended as follows:

■ a. By removing the tables titled ''Illinois—$PM_{2.5}$ (Annual NAAQS)'' and ''Illinois—$PM_{2.5}$ [24-hour NAAQS]''.

■ b. By adding three tables titled ''Illinois—1997 Annual $PM_{2.5}$ NAAQS (Primary and Secondary)'' and ''Illinois—1997 24-hour $PM_{2.5}$ NAAQS (Primary and Secondary)'' and ''Illinois—2006 24-hour $PM_{2.5}$ NAAQS (Primary and Secondary)'' before the table titled ''Illinois—NO_2 (1971 Annual Standard)''.

The additions read as follows:

§ 81.314 Illinois.

* * * * *

* * * * *

ILLINOIS—1997 ANNUAL $PM_{2.5}$ NAAQS

[Primary and secondary]

Designated area	Designation [a]		Classification	
	Date [1]	Type	Date [2]	Type
Chicago-Gary-Lake County, IL–IN:	10/2/13	Attainment.		
Cook County				
DuPage County				
Grundy County (part):				
Goose Lake and Aux Sable Townships				

ILLINOIS—1997 ANNUAL $PM_{2.5}$ NAAQS—Continued

[Primary and secondary]

Designated area	Designation [a]		Classification	
	Date [1]	Type	Date [2]	Type
Kane County				
Kendall County (part):				
Oswego Township				
Lake County				
McHenry County				
Will County				
St. Louis, MO–IL:				
Madison County		Nonattainment		Moderate.
Monroe County		Nonattainment		Moderate.
Randolph County (part)				
Baldwin Village		Nonattainment		Moderate.
St. Clair County		Nonattainment		Moderate.
Rest of State:				
Adams County		Unclassifiable/Attainment.		
Alexander County		Unclassifiable/Attainment.		
Bond County		Unclassifiable/Attainment.		
Boone County		Unclassifiable/Attainment.		
Brown County		Unclassifiable/Attainment.		
Bureau County		Unclassifiable/Attainment.		
Calhoun County		Unclassifiable/Attainment.		
Carroll County		Unclassifiable/Attainment.		
Cass County		Unclassifiable/Attainment.		
Champaign County		Unclassifiable/Attainment.		
Christian County		Unclassifiable/Attainment.		
Clark County		Unclassifiable/Attainment.		
Clay County		Unclassifiable/Attainment.		
Clinton County		Unclassifiable/Attainment.		
Coles County		Unclassifiable/Attainment.		
Crawford County		Unclassifiable/Attainment.		
Cumberland County		Unclassifiable/Attainment.		
DeKalb County		Unclassifiable/Attainment.		
De Witt County		Unclassifiable/Attainment.		
Douglas County		Unclassifiable/Attainment.		
Edgar County		Unclassifiable/Attainment.		
Edwards County		Unclassifiable/Attainment.		
Effingham County		Unclassifiable/Attainment.		
Fayette County		Unclassifiable/Attainment.		
Ford County		Unclassifiable/Attainment.		
Franklin County		Unclassifiable/Attainment.		
Fulton County		Unclassifiable/Attainment.		
Gallatin County		Unclassifiable/Attainment.		
Greene County		Unclassifiable/Attainment.		
Grundy County (remainder)		Unclassifiable/Attainment.		
Hamilton County		Unclassifiable/Attainment.		
Hancock County		Unclassifiable/Attainment.		
Hardin County		Unclassifiable/Attainment.		
Henderson County		Unclassifiable/Attainment.		
Henry County		Unclassifiable/Attainment.		
Iroquois County		Unclassifiable/Attainment.		
Jackson County		Unclassifiable/Attainment.		
Jasper County		Unclassifiable/Attainment.		
Jefferson County		Unclassifiable/Attainment.		
Jersey County		Unclassifiable/Attainment.		
Jo Daviess County		Unclassifiable/Attainment.		
Johnson County		Unclassifiable/Attainment.		
Kankakee County		Unclassifiable/Attainment.		
Kendall County (remainder)		Unclassifiable/Attainment.		
Knox County		Unclassifiable/Attainment.		
La Salle County		Unclassifiable/Attainment.		
Lawrence County		Unclassifiable/Attainment.		
Lee County		Unclassifiable/Attainment.		
Livingston County		Unclassifiable/Attainment.		
Logan County		Unclassifiable/Attainment.		
McDonough County		Unclassifiable/Attainment.		
McLean County		Unclassifiable/Attainment.		
Macon County		Unclassifiable/Attainment.		
Macoupin County		Unclassifiable/Attainment.		
Marion County		Unclassifiable/Attainment.		
Marshall County		Unclassifiable/Attainment.		

ILLINOIS—1997 ANNUAL $PM_{2.5}$ NAAQS—Continued

[Primary and secondary]

Designated area	Designation [a]		Classification	
	Date [1]	Type	Date [2]	Type
Mason County		Unclassifiable/Attainment.		
Massac County		Unclassifiable/Attainment.		
Menard County		Unclassifiable/Attainment.		
Mercer County		Unclassifiable/Attainment.		
Montgomery County		Unclassifiable/Attainment.		
Morgan County		Unclassifiable/Attainment.		
Moultrie County		Unclassifiable/Attainment.		
Ogle County		Unclassifiable/Attainment.		
Peoria County		Unclassifiable/Attainment.		
Perry County		Unclassifiable/Attainment.		
Piatt County		Unclassifiable/Attainment.		
Pike County		Unclassifiable/Attainment.		
Pope County		Unclassifiable/Attainment.		
Pulaski County		Unclassifiable/Attainment.		
Putnam County		Unclassifiable/Attainment.		
Randolph County (remainder)		Unclassifiable/Attainment.		
Richland County		Unclassifiable/Attainment.		
Rock Island County		Unclassifiable/Attainment.		
Saline County		Unclassifiable/Attainment.		
Sangamon County		Unclassifiable/Attainment.		
Schuyler County		Unclassifiable/Attainment.		
Scott County		Unclassifiable/Attainment.		
Shelby County		Unclassifiable/Attainment.		
Stark County		Unclassifiable/Attainment.		
Stephenson County		Unclassifiable/Attainment.		
Tazewell County		Unclassifiable/Attainment.		
Union County		Unclassifiable/Attainment.		
Vermilion County		Unclassifiable/Attainment.		
Wabash County		Unclassifiable/Attainment.		
Warren County		Unclassifiable/Attainment.		
Washington County		Unclassifiable/Attainment.		
Wayne County		Unclassifiable/Attainment.		
White County		Unclassifiable/Attainment.		
Whiteside County		Unclassifiable/Attainment.		
Williamson County		Unclassifiable/Attainment.		
Winnebago County		Unclassifiable/Attainment.		
Woodford County		Unclassifiable/Attainment.		

[a] Includes Indian Country located in each county or area, except as otherwise specified.
[1] This date is 90 days after January 5, 2005, unless otherwise noted.
[2] This date is July 2, 2014, unless otherwise noted.

ILLINOIS—1997 24-HOUR $PM_{2.5}$ NAAQS

[Primary and secondary]

Designated area	Designation [a]		Classification	
	Date [1]	Type	Date	Type
Statewide:				
Adams County		Unclassifiable/Attainment.		
Alexander County		Unclassifiable/Attainment.		
Bond County		Unclassifiable/Attainment.		
Boone County		Unclassifiable/Attainment.		
Brown County		Unclassifiable/Attainment.		
Bureau County		Unclassifiable/Attainment.		
Calhoun County		Unclassifiable/Attainment.		
Carroll County		Unclassifiable/Attainment.		
Cass County		Unclassifiable/Attainment.		
Champaign County		Unclassifiable/Attainment.		
Christian County		Unclassifiable/Attainment.		
Clark County		Unclassifiable/Attainment.		
Clay County		Unclassifiable/Attainment.		
Clinton County		Unclassifiable/Attainment.		
Coles County		Unclassifiable/Attainment.		
Cook County		Unclassifiable/Attainment.		
Crawford County		Unclassifiable/Attainment.		
Cumberland County		Unclassifiable/Attainment.		
DeKalb County		Unclassifiable/Attainment.		

ILLINOIS—1997 24-HOUR $PM_{2.5}$ NAAQS—Continued

[Primary and secondary]

Designated area	Designation [a]		Classification	
	Date [1]	Type	Date	Type
De Witt County		Unclassifiable/Attainment.		
Douglas County		Unclassifiable/Attainment.		
DuPage County		Unclassifiable/Attainment.		
Edgar County		Unclassifiable/Attainment.		
Edwards County		Unclassifiable/Attainment.		
Effingham County		Unclassifiable/Attainment.		
Fayette County		Unclassifiable/Attainment.		
Ford County		Unclassifiable/Attainment.		
Franklin County		Unclassifiable/Attainment.		
Fulton County		Unclassifiable/Attainment.		
Gallatin County		Unclassifiable/Attainment.		
Greene County		Unclassifiable/Attainment.		
Grundy County		Unclassifiable/Attainment.		
Hamilton County		Unclassifiable/Attainment.		
Hancock County		Unclassifiable/Attainment.		
Hardin County		Unclassifiable/Attainment.		
Henderson County		Unclassifiable/Attainment.		
Henry County		Unclassifiable/Attainment.		
Iroquois County		Unclassifiable/Attainment.		
Jackson County		Unclassifiable/Attainment.		
Jasper County		Unclassifiable/Attainment.		
Jefferson County		Unclassifiable/Attainment.		
Jersey County		Unclassifiable/Attainment.		
Jo Daviess County		Unclassifiable/Attainment.		
Johnson County		Unclassifiable/Attainment.		
Kane County		Unclassifiable/Attainment.		
Kankakee County		Unclassifiable/Attainment.		
Kendall County		Unclassifiable/Attainment.		
Knox County		Unclassifiable/Attainment.		
La Salle County		Unclassifiable/Attainment.		
Lake County		Unclassifiable/Attainment.		
Lawrence County		Unclassifiable/Attainment.		
Lee County		Unclassifiable/Attainment.		
Livingston County		Unclassifiable/Attainment.		
Logan County		Unclassifiable/Attainment.		
McDonough County		Unclassifiable/Attainment.		
McHenry County		Unclassifiable/Attainment.		
McLean County		Unclassifiable/Attainment.		
Macon County		Unclassifiable/Attainment.		
Macoupin County		Unclassifiable/Attainment.		
Madison County		Unclassifiable/Attainment.		
Marion County		Unclassifiable/Attainment.		
Marshall County		Unclassifiable/Attainment.		
Mason County		Unclassifiable/Attainment.		
Massac County		Unclassifiable/Attainment.		
Menard County		Unclassifiable/Attainment.		
Mercer County		Unclassifiable/Attainment.		
Monroe County		Unclassifiable/Attainment.		
Montgomery County		Unclassifiable/Attainment.		
Morgan County		Unclassifiable/Attainment.		
Moultrie County		Unclassifiable/Attainment.		
Ogle County		Unclassifiable/Attainment.		
Peoria County		Unclassifiable/Attainment.		
Perry County		Unclassifiable/Attainment.		
Piatt County		Unclassifiable/Attainment.		
Pike County		Unclassifiable/Attainment.		
Pope County		Unclassifiable/Attainment.		
Pulaski County		Unclassifiable/Attainment.		
Putnam County		Unclassifiable/Attainment.		
Randolph County		Unclassifiable/Attainment.		
Richland County		Unclassifiable/Attainment.		
Rock Island County		Unclassifiable/Attainment.		
St. Clair County		Unclassifiable/Attainment.		
Saline County		Unclassifiable/Attainment.		
Sangamon County		Unclassifiable/Attainment.		
Schuyler County		Unclassifiable/Attainment.		
Scott County		Unclassifiable/Attainment.		
Shelby County		Unclassifiable/Attainment.		
Stark County		Unclassifiable/Attainment.		

ILLINOIS—1997 24-HOUR $PM_{2.5}$ NAAQS—Continued

[Primary and secondary]

Designated area	Designation [a]		Classification	
	Date [1]	Type	Date	Type
Stephenson County		Unclassifiable/Attainment.		
Tazewell County		Unclassifiable/Attainment.		
Union County		Unclassifiable/Attainment.		
Vermilion County		Unclassifiable/Attainment.		
Wabash County		Unclassifiable/Attainment.		
Warren County		Unclassifiable/Attainment.		
Washington County		Unclassifiable/Attainment.		
Wayne County		Unclassifiable/Attainment.		
White County		Unclassifiable/Attainment.		
Whiteside County		Unclassifiable/Attainment.		
Will County		Unclassifiable/Attainment.		
Williamson County		Unclassifiable/Attainment.		
Winnebago County		Unclassifiable/Attainment.		
Woodford County		Unclassifiable/Attainment.		

[a] Includes Indian Country located in each county or area, except as otherwise specified.
[1] This date is 90 days after January 5, 2005, unless otherwise noted.

ILLINOIS—2006 24-HOUR $PM_{2.5}$ NAAQS

[Primary and secondary]

Designated area	Designation [a]		Classification	
	Date [1]	Type	Date	Type
Statewide:				
Adams County		Unclassifiable/Attainment.		
Alexander County		Unclassifiable/Attainment.		
Bond County		Unclassifiable/Attainment.		
Boone County		Unclassifiable/Attainment.		
Brown County		Unclassifiable/Attainment.		
Bureau County		Unclassifiable/Attainment.		
Calhoun County		Unclassifiable/Attainment.		
Carroll County		Unclassifiable/Attainment.		
Cass County		Unclassifiable/Attainment.		
Champaign County		Unclassifiable/Attainment.		
Christian County		Unclassifiable/Attainment.		
Clark County		Unclassifiable/Attainment.		
Clay County		Unclassifiable/Attainment.		
Clinton County		Unclassifiable/Attainment.		
Coles County		Unclassifiable/Attainment.		
Cook County		Unclassifiable/Attainment.		
Crawford County		Unclassifiable/Attainment.		
Cumberland County		Unclassifiable/Attainment.		
DeKalb County		Unclassifiable/Attainment.		
De Witt County		Unclassifiable/Attainment.		
Douglas County		Unclassifiable/Attainment.		
DuPage County		Unclassifiable/Attainment.		
Edgar County		Unclassifiable/Attainment.		
Edwards County		Unclassifiable/Attainment.		
Effingham County		Unclassifiable/Attainment.		
Fayette County		Unclassifiable/Attainment.		
Ford County		Unclassifiable/Attainment.		
Franklin County		Unclassifiable/Attainment.		
Fulton County		Unclassifiable/Attainment.		
Gallatin County		Unclassifiable/Attainment.		
Greene County		Unclassifiable/Attainment.		
Grundy County		Unclassifiable/Attainment.		
Hamilton County		Unclassifiable/Attainment.		
Hancock County		Unclassifiable/Attainment.		
Hardin County		Unclassifiable/Attainment.		
Henderson County		Unclassifiable/Attainment.		
Henry County		Unclassifiable/Attainment.		
Iroquois County		Unclassifiable/Attainment.		
Jackson County		Unclassifiable/Attainment.		
Jasper County		Unclassifiable/Attainment.		
Jefferson County		Unclassifiable/Attainment.		
Jersey County		Unclassifiable/Attainment.		
Jo Daviess County		Unclassifiable/Attainment.		

ILLINOIS—2006 24-HOUR $PM_{2.5}$ NAAQS—Continued

[Primary and secondary]

Designated area	Designation [a]		Classification	
	Date [1]	Type	Date	Type
Johnson County		Unclassifiable/Attainment.		
Kane County		Unclassifiable/Attainment.		
Kankakee County		Unclassifiable/Attainment.		
Kendall County		Unclassifiable/Attainment.		
Knox County		Unclassifiable/Attainment.		
La Salle County		Unclassifiable/Attainment.		
Lake County		Unclassifiable/Attainment.		
Lawrence County		Unclassifiable/Attainment.		
Lee County		Unclassifiable/Attainment.		
Livingston County		Unclassifiable/Attainment.		
Logan County		Unclassifiable/Attainment.		
McDonough County		Unclassifiable/Attainment.		
McHenry County		Unclassifiable/Attainment.		
McLean County		Unclassifiable/Attainment.		
Macon County		Unclassifiable/Attainment.		
Macoupin County		Unclassifiable/Attainment.		
Madison County		Unclassifiable/Attainment.		
Marion County		Unclassifiable/Attainment.		
Marshall County		Unclassifiable/Attainment.		
Mason County		Unclassifiable/Attainment.		
Massac County		Unclassifiable/Attainment.		
Menard County		Unclassifiable/Attainment.		
Mercer County		Unclassifiable/Attainment.		
Monroe County		Unclassifiable/Attainment.		
Montgomery County		Unclassifiable/Attainment.		
Morgan County		Unclassifiable/Attainment.		
Moultrie County		Unclassifiable/Attainment.		
Ogle County		Unclassifiable/Attainment.		
Peoria County		Unclassifiable/Attainment.		
Perry County		Unclassifiable/Attainment.		
Piatt County		Unclassifiable/Attainment.		
Pike County		Unclassifiable/Attainment.		
Pope County		Unclassifiable/Attainment.		
Pulaski County		Unclassifiable/Attainment.		
Putnam County		Unclassifiable/Attainment.		
Randolph County		Unclassifiable/Attainment.		
Richland County		Unclassifiable/Attainment.		
Rock Island County		Unclassifiable/Attainment.		
St. Clair County		Unclassifiable/Attainment.		
Saline County		Unclassifiable/Attainment.		
Sangamon County		Unclassifiable/Attainment.		
Schuyler County		Unclassifiable/Attainment.		
Scott County		Unclassifiable/Attainment.		
Shelby County		Unclassifiable/Attainment.		
Stark County		Unclassifiable/Attainment.		
Stephenson County		Unclassifiable/Attainment.		
Tazewell County		Unclassifiable/Attainment.		
Union County		Unclassifiable/Attainment.		
Vermilion County		Unclassifiable/Attainment.		
Wabash County		Unclassifiable/Attainment.		
Warren County		Unclassifiable/Attainment.		
Washington County		Unclassifiable/Attainment.		
Wayne County		Unclassifiable/Attainment.		
White County		Unclassifiable/Attainment.		
Whiteside County		Unclassifiable/Attainment.		
Will County		Unclassifiable/Attainment.		
Williamson County		Unclassifiable/Attainment.		
Winnebago County		Unclassifiable/Attainment.		
Woodford County		Unclassifiable/Attainment.		

[a] Includes Indian Country located in each county or area, except as otherwise specified.
[1] This date is 30 days after November 13, 2009, unless otherwise noted.

* * * * *

■ 16. Section 81.315 is amended as follows:

■ a. By removing the tables titled ''Indiana—$PM_{2.5}$ (Annual NAAQS)'' and ''Indiana—$PM_{2.5}$ [24-hour NAAQS]''.

■ b. By adding three tables titled ''Indiana—1997 Annual $PM_{2.5}$ NAAQS (Primary and Secondary)'' and ''Indiana—1997 24-hour $PM_{2.5}$ NAAQS

(Primary and Secondary)'' and ''Indiana—2006 24-hour $PM_{2.5}$ NAAQS (Primary and Secondary)'' before the table titled ''Indiana—NO_2 (1971 Annual Standard)''.

The additions read as follows:

§ 81.315 Indiana.

* * * * *

INDIANA—1997 ANNUAL $PM_{2.5}$ NAAQS

[Primary and secondary]

Designated area	Designation [a]		Classification	
	Date [1]	Type	Date [2]	Type
Chicago-Gary-Lake County, IL–IN	02/06/12	Attainment.		
Lake County				
Porter County				
Cincinnati-Hamilton, IN	12/23/11	Attainment.		
Dearborn County (part):				
Lawrenceburg Township				
Elkhart, IN:				
Elkhart County		Unclassifiable/Attainment.		
St. Joseph County		Unclassifiable/Attainment.		
Evansville, IN	10/27/11	Attainment.		
Dubois County				
Gibson County (part):				
Montgomery Township				
Pike County (part):				
Washington Township				
Spencer County (part):				
Ohio Township				
Vanderburgh County				
Warrick County				
Indianapolis, IN	7/11/13	Attainment.		
Hamilton County				
Hendricks County				
Johnson County				
Marion County				
Morgan County				
Louisville, KY–IN:				
Clark County		Nonattainment		Moderate.
Floyd County		Nonattainment		Moderate.
Jefferson County (part)		Nonattainment		Moderate.
Madison Township				
Muncie, IN:				
Delaware County		Unclassifiable/Attainment.		
Rest of State:				
Adams County		Unclassifiable/Attainment.		
Allen County		Unclassifiable/Attainment.		
Bartholomew County		Unclassifiable/Attainment.		
Benton County		Unclassifiable/Attainment.		
Blackford County		Unclassifiable/Attainment.		
Boone County		Unclassifiable/Attainment.		
Brown County		Unclassifiable/Attainment.		
Carroll County		Unclassifiable/Attainment.		
Cass County		Unclassifiable/Attainment.		
Clay County		Unclassifiable/Attainment.		
Clinton County		Unclassifiable/Attainment.		
Crawford County		Unclassifiable/Attainment.		
Daviess County		Unclassifiable/Attainment.		
Dearborn County (remainder)		Unclassifiable/Attainment.		
Decatur County		Unclassifiable/Attainment.		
De Kalb County		Unclassifiable/Attainment.		
Fayette County		Unclassifiable/Attainment.		
Fountain County		Unclassifiable/Attainment.		
Franklin County		Unclassifiable/Attainment.		
Fulton County		Unclassifiable/Attainment.		
Gibson County (remainder)		Unclassifiable/Attainment.		
Grant County		Unclassifiable/Attainment.		
Greene County		Unclassifiable/Attainment.		
Hancock County		Unclassifiable/Attainment.		
Harrison County		Unclassifiable/Attainment.		
Henry County		Unclassifiable/Attainment.		
Howard County		Unclassifiable/Attainment.		
Huntington County		Unclassifiable/Attainment.		
Jackson County		Unclassifiable/Attainment.		
Jasper County		Unclassifiable/Attainment.		
Jay County		Unclassifiable/Attainment.		
Jefferson County (remainder)		Unclassifiable/Attainment.		

INDIANA—1997 ANNUAL $PM_{2.5}$ NAAQS—Continued

[Primary and secondary]

Designated area	Designation [a]		Classification	
	Date [1]	Type	Date [2]	Type
Jennings County		Unclassifiable/Attainment.		
Knox County		Unclassifiable/Attainment.		
Kosciusko County		Unclassifiable/Attainment.		
LaGrange County		Unclassifiable/Attainment.		
La Porte County		Unclassifiable/Attainment.		
Lawrence County		Unclassifiable/Attainment.		
Madison County		Unclassifiable/Attainment.		
Marshall County		Unclassifiable/Attainment.		
Martin County		Unclassifiable/Attainment.		
Miami County		Unclassifiable/Attainment.		
Monroe County		Unclassifiable/Attainment.		
Montgomery County		Unclassifiable/Attainment.		
Newton County		Unclassifiable/Attainment.		
Noble County		Unclassifiable/Attainment.		
Ohio County		Unclassifiable/Attainment.		
Orange County		Unclassifiable/Attainment.		
Owen County		Unclassifiable/Attainment.		
Parke County		Unclassifiable/Attainment.		
Perry County		Unclassifiable/Attainment.		
Pike County (remainder)		Unclassifiable/Attainment.		
Posey County		Unclassifiable/Attainment.		
Pulaski County		Unclassifiable/Attainment.		
Putnam County		Unclassifiable/Attainment.		
Randolph County		Unclassifiable/Attainment.		
Ripley County		Unclassifiable/Attainment.		
Rush County		Unclassifiable/Attainment.		
Scott County		Unclassifiable/Attainment.		
Shelby County		Unclassifiable/Attainment.		
Spencer County (remainder)		Unclassifiable/Attainment.		
Starke County		Unclassifiable/Attainment.		
Steuben County		Unclassifiable/Attainment.		
Sullivan County		Unclassifiable/Attainment.		
Switzerland County		Unclassifiable/Attainment.		
Tippecanoe County		Unclassifiable/Attainment.		
Tipton County		Unclassifiable/Attainment.		
Union County		Unclassifiable/Attainment.		
Vermillion County		Unclassifiable/Attainment.		
Vigo County		Unclassifiable/Attainment.		
Wabash County		Unclassifiable/Attainment.		
Warren County		Unclassifiable/Attainment.		
Washington County		Unclassifiable/Attainment.		
Wayne County		Unclassifiable/Attainment.		
Wells County		Unclassifiable/Attainment.		
White County		Unclassifiable/Attainment.		
Whitley County		Unclassifiable/Attainment.		

[a] Includes Indian Country located in each county or area, except as otherwise specified.
[1] This date is 90 days after January 5, 2005, unless otherwise noted.
[2] This date is July 2, 2014, unless otherwise noted.

INDIANA—1997 24-HOUR $PM_{2.5}$

[Primary and secondary]

Designated area	Designation [a]		Classification	
	Date [1]	Type	Date	Type
Statewide:				
Adams County		Unclassifiable/Attainment.		
Allen County		Unclassifiable/Attainment.		
Bartholomew County		Unclassifiable/Attainment.		
Benton County		Unclassifiable/Attainment.		
Blackford County		Unclassifiable/Attainment.		
Boone County		Unclassifiable/Attainment.		
Brown County		Unclassifiable/Attainment.		
Carroll County		Unclassifiable/Attainment.		
Cass County		Unclassifiable/Attainment.		
Clark County		Unclassifiable/Attainment.		
Clay County		Unclassifiable/Attainment.		

INDIANA—1997 24-HOUR $PM_{2.5}$—Continued

[Primary and secondary]

Designated area	Designation [a]		Classification	
	Date [1]	Type	Date	Type
Clinton County		Unclassifiable/Attainment.		
Crawford County		Unclassifiable/Attainment.		
Daviess County		Unclassifiable/Attainment.		
Dearborn County		Unclassifiable/Attainment.		
Decatur County		Unclassifiable/Attainment.		
De Kalb County		Unclassifiable/Attainment.		
Elkhart County		Unclassifiable/Attainment.		
Delaware County		Unclassifiable/Attainment.		
Dubois County		Unclassifiable/Attainment.		
Elkhart County		Unclassifiable/Attainment.		
Fayette County		Unclassifiable/Attainment.		
Floyd County		Unclassifiable/Attainment.		
Fountain County		Unclassifiable/Attainment.		
Franklin County		Unclassifiable/Attainment.		
Fulton County		Unclassifiable/Attainment.		
Gibson County		Unclassifiable/Attainment.		
Grant County		Unclassifiable/Attainment.		
Greene County		Unclassifiable/Attainment.		
Hamilton County		Unclassifiable/Attainment.		
Hancock County		Unclassifiable/Attainment.		
Harrison County		Unclassifiable/Attainment.		
Hendricks County		Unclassifiable/Attainment.		
Henry County		Unclassifiable/Attainment.		
Howard County		Unclassifiable/Attainment.		
Huntington County		Unclassifiable/Attainment.		
Jackson County		Unclassifiable/Attainment.		
Jasper County		Unclassifiable/Attainment.		
Jay County		Unclassifiable/Attainment.		
Jefferson County		Unclassifiable/Attainment.		
Jennings County		Unclassifiable/Attainment.		
Johnson County		Unclassifiable/Attainment.		
Knox County		Unclassifiable/Attainment.		
Kosciusko County		Unclassifiable/Attainment.		
LaGrange County		Unclassifiable/Attainment.		
La Porte County		Unclassifiable/Attainment.		
Lake County		Unclassifiable/Attainment.		
Lawrence County		Unclassifiable/Attainment.		
Madison County		Unclassifiable/Attainment.		
Marion County		Unclassifiable/Attainment.		
Marshall County		Unclassifiable/Attainment.		
Martin County		Unclassifiable/Attainment.		
Miami County		Unclassifiable/Attainment.		
Monroe County		Unclassifiable/Attainment.		
Montgomery County		Unclassifiable/Attainment.		
Morgan County		Unclassifiable/Attainment.		
Newton County		Unclassifiable/Attainment.		
Noble County		Unclassifiable/Attainment.		
Ohio County		Unclassifiable/Attainment.		
Orange County		Unclassifiable/Attainment.		
Owen County		Unclassifiable/Attainment.		
Parke County		Unclassifiable/Attainment.		
Perry County		Unclassifiable/Attainment.		
Pike County		Unclassifiable/Attainment.		
Porter County		Unclassifiable/Attainment.		
Posey County		Unclassifiable/Attainment.		
Pulaski County		Unclassifiable/Attainment.		
Putnam County		Unclassifiable/Attainment.		
Randolph County		Unclassifiable/Attainment.		
Ripley County		Unclassifiable/Attainment.		
Rush County		Unclassifiable/Attainment.		
St Joseph County		Unclassifiable/Attainment.		
Scott County		Unclassifiable/Attainment.		
Shelby County		Unclassifiable/Attainment.		
Spencer County		Unclassifiable/Attainment.		
Starke County		Unclassifiable/Attainment.		
Steuben County		Unclassifiable/Attainment.		
Sullivan County		Unclassifiable/Attainment.		
Switzerland County		Unclassifiable/Attainment.		
Tippecanoe County		Unclassifiable/Attainment.		

INDIANA—1997 24-HOUR $PM_{2.5}$—Continued

[Primary and secondary]

Designated area	Designation [a]		Classification	
	Date [1]	Type	Date	Type
Tipton County		Unclassifiable/Attainment.		
Union County		Unclassifiable/Attainment.		
Vandenberg County		Unclassifiable/Attainment.		
Vermillion County		Unclassifiable/Attainment.		
Vigo County		Unclassifiable/Attainment.		
Wabash County		Unclassifiable/Attainment.		
Warren County		Unclassifiable/Attainment.		
Warrick County		Unclassifiable/Attainment.		
Washington County		Unclassifiable/Attainment.		
Wayne County		Unclassifiable/Attainment.		
Wells County		Unclassifiable/Attainment.		
White County		Unclassifiable/Attainment.		
Whitley County		Unclassifiable/Attainment.		

[a] Includes Indian Country located in each county or area, except as otherwise specified.
[1] This date is 90 days after January 5, 2005, unless otherwise noted.

INDIANA—2006 24-HOUR $PM_{2.5}$ NAAQS

[Primary and secondary]

Designated area	Designation [a]		Classification	
	Date [1]	Type	Date	Type
Statewide:				
Adams County		Unclassifiable/Attainment.		
Allen County		Unclassifiable/Attainment.		
Bartholomew County		Unclassifiable/Attainment.		
Benton County		Unclassifiable/Attainment.		
Blackford County		Unclassifiable/Attainment.		
Boone County		Unclassifiable/Attainment.		
Brown County		Unclassifiable/Attainment.		
Carroll County		Unclassifiable/Attainment.		
Cass County		Unclassifiable/Attainment.		
Clark County		Unclassifiable/Attainment.		
Clay County		Unclassifiable/Attainment.		
Clinton County		Unclassifiable/Attainment.		
Crawford County		Unclassifiable/Attainment.		
Daviess County		Unclassifiable/Attainment.		
Dearborn County		Unclassifiable/Attainment.		
Decatur County		Unclassifiable/Attainment.		
De Kalb County		Unclassifiable/Attainment.		
Elkhart County		Unclassifiable/Attainment.		
Delaware County		Unclassifiable/Attainment.		
Dubois County		Unclassifiable/Attainment.		
Elkhart County		Unclassifiable/Attainment.		
Fayette County		Unclassifiable/Attainment.		
Floyd County		Unclassifiable/Attainment.		
Fountain County		Unclassifiable/Attainment.		
Franklin County		Unclassifiable/Attainment.		
Fulton County		Unclassifiable/Attainment.		
Gibson County		Unclassifiable/Attainment.		
Grant County		Unclassifiable/Attainment.		
Greene County		Unclassifiable/Attainment.		
Hamilton County		Unclassifiable/Attainment.		
Hancock County		Unclassifiable/Attainment.		
Harrison County		Unclassifiable/Attainment.		
Hendricks County		Unclassifiable/Attainment.		
Henry County		Unclassifiable/Attainment.		
Howard County		Unclassifiable/Attainment.		
Huntington County		Unclassifiable/Attainment.		
Jackson County		Unclassifiable/Attainment.		
Jasper County		Unclassifiable/Attainment.		
Jay County		Unclassifiable/Attainment.		
Jefferson County		Unclassifiable/Attainment.		
Jennings County		Unclassifiable/Attainment.		
Johnson County		Unclassifiable/Attainment.		
Knox County		Unclassifiable/Attainment.		
Kosciusko County		Unclassifiable/Attainment.		

INDIANA—2006 24-HOUR $PM_{2.5}$ NAAQS—Continued

[Primary and secondary]

Designated area	Designation [a]		Classification	
	Date [1]	Type	Date	Type
LaGrange County		Unclassifiable/Attainment.		
La Porte County		Unclassifiable/Attainment.		
Lake County		Unclassifiable/Attainment.		
Lawrence County		Unclassifiable/Attainment.		
Madison County		Unclassifiable/Attainment.		
Marion County		Unclassifiable/Attainment.		
Marshall County		Unclassifiable/Attainment.		
Martin County		Unclassifiable/Attainment.		
Miami County		Unclassifiable/Attainment.		
Monroe County		Unclassifiable/Attainment.		
Montgomery County		Unclassifiable/Attainment.		
Morgan County		Unclassifiable/Attainment.		
Newton County		Unclassifiable/Attainment.		
Noble County		Unclassifiable/Attainment.		
Ohio County		Unclassifiable/Attainment.		
Orange County		Unclassifiable/Attainment.		
Owen County		Unclassifiable/Attainment.		
Parke County		Unclassifiable/Attainment.		
Perry County		Unclassifiable/Attainment.		
Pike County		Unclassifiable/Attainment.		
Porter County		Unclassifiable/Attainment.		
Posey County		Unclassifiable/Attainment.		
Pulaski County		Unclassifiable/Attainment.		
Putnam County		Unclassifiable/Attainment.		
Randolph County		Unclassifiable/Attainment.		
Ripley County		Unclassifiable/Attainment.		
Rush County		Unclassifiable/Attainment.		
St Joseph County		Unclassifiable/Attainment.		
Scott County		Unclassifiable/Attainment.		
Shelby County		Unclassifiable/Attainment.		
Spencer County		Unclassifiable/Attainment.		
Starke County		Unclassifiable/Attainment.		
Steuben County		Unclassifiable/Attainment.		
Sullivan County		Unclassifiable/Attainment.		
Switzerland County		Unclassifiable/Attainment.		
Tippecanoe County		Unclassifiable/Attainment.		
Tipton County		Unclassifiable/Attainment.		
Union County		Unclassifiable/Attainment.		
Vandenberg County		Unclassifiable/Attainment.		
Vermillion County		Unclassifiable/Attainment.		
Vigo County		Unclassifiable/Attainment.		
Wabash County		Unclassifiable/Attainment.		
Warren County		Unclassifiable/Attainment.		
Warrick County		Unclassifiable/Attainment.		
Washington County		Unclassifiable/Attainment.		
Wayne County		Unclassifiable/Attainment.		
Wells County		Unclassifiable/Attainment.		
White County		Unclassifiable/Attainment.		
Whitley County		Unclassifiable/Attainment.		

[a] Includes Indian Country located in each county or area, except as otherwise specified.
[1] This date is 30 days after November 13, 2009, unless otherwise noted.

* * * * *

■ 17. Section 81.316 is amended as follows:

■ a. By removing the tables titled ''Iowa—$PM_{2.5}$ (Annual NAAQS)'' and ''Iowa—$PM_{2.5}$ [24-hour NAAQS]''.

■ b. By adding three tables titled ''Iowa—1997 Annual $PM_{2.5}$ NAAQS (Primary and Secondary)'' and ''Iowa—1997 24-hour $PM_{2.5}$ NAAQS (Primary and Secondary)'' and ''Iowa—2006 24-hour $PM_{2.5}$ NAAQS (Primary and Secondary)'' before the table titled ''Iowa—NO_2 (1971 Annual Standard)''.

The additions read as follows:

§ 81.316 Iowa.

* * * * *

IOWA—1997 ANNUAL $PM_{2.5}$ NAAQS

[Primary and secondary]

Designated area	Designation [a]		Classification	
	Date [1]	Type	Date	Type
Statewide:				
Adair County		Unclassifiable/Attainment.		
Adams County		Unclassifiable/Attainment.		
Allamakee County		Unclassifiable/Attainment.		
Appanoose County		Unclassifiable/Attainment.		
Audubon County		Unclassifiable/Attainment.		
Benton County		Unclassifiable/Attainment.		
Black Hawk County		Unclassifiable/Attainment.		
Boone County		Unclassifiable/Attainment.		
Bremer County		Unclassifiable/Attainment.		
Buchanan County		Unclassifiable/Attainment.		
Buena Vista County		Unclassifiable/Attainment.		
Butler County		Unclassifiable/Attainment.		
Calhoun County		Unclassifiable/Attainment.		
Carroll County		Unclassifiable/Attainment.		
Cass County		Unclassifiable/Attainment.		
Cedar County		Unclassifiable/Attainment.		
Cerro Gordo County		Unclassifiable/Attainment.		
Cherokee County		Unclassifiable/Attainment.		
Chickasaw County		Unclassifiable/Attainment.		
Clarke County		Unclassifiable/Attainment.		
Clay County		Unclassifiable/Attainment.		
Clayton County		Unclassifiable/Attainment.		
Clinton County		Unclassifiable/Attainment.		
Crawford County		Unclassifiable/Attainment.		
Dallas County		Unclassifiable/Attainment.		
Davis County		Unclassifiable/Attainment.		
Decatur County		Unclassifiable/Attainment.		
Delaware County		Unclassifiable/Attainment.		
Des Moines County		Unclassifiable/Attainment.		
Dickinson County		Unclassifiable/Attainment.		
Dubuque County		Unclassifiable/Attainment.		
Emmet County		Unclassifiable/Attainment.		
Fayette County		Unclassifiable/Attainment.		
Floyd County		Unclassifiable/Attainment.		
Franklin County		Unclassifiable/Attainment.		
Fremont County		Unclassifiable/Attainment.		
Greene County		Unclassifiable/Attainment.		
Grundy County		Unclassifiable/Attainment.		
Guthrie County		Unclassifiable/Attainment.		
Hamilton County		Unclassifiable/Attainment.		
Hancock County		Unclassifiable/Attainment.		
Hardin County		Unclassifiable/Attainment.		
Harrison County		Unclassifiable/Attainment.		
Henry County		Unclassifiable/Attainment.		
Howard County		Unclassifiable/Attainment.		
Humboldt County		Unclassifiable/Attainment.		
Ida County		Unclassifiable/Attainment.		
Iowa County		Unclassifiable/Attainment.		
Jackson County		Unclassifiable/Attainment.		
Jasper County		Unclassifiable/Attainment.		
Jefferson County		Unclassifiable/Attainment.		
Johnson County		Unclassifiable/Attainment.		
Jones County		Unclassifiable/Attainment.		
Keokuk County		Unclassifiable/Attainment.		
Kossuth County		Unclassifiable/Attainment.		
Lee County		Unclassifiable/Attainment.		
Linn County		Unclassifiable/Attainment.		
Louisa County		Unclassifiable/Attainment.		
Lucas County		Unclassifiable/Attainment.		
Lyon County		Unclassifiable/Attainment.		
Madison County		Unclassifiable/Attainment.		
Mahaska County		Unclassifiable/Attainment.		
Marion County		Unclassifiable/Attainment.		
Marshall County		Unclassifiable/Attainment.		
Mills County		Unclassifiable/Attainment.		
Mitchell County		Unclassifiable/Attainment.		
Monona County		Unclassifiable/Attainment.		
Monroe County		Unclassifiable/Attainment.		

IOWA—1997 ANNUAL $PM_{2.5}$ NAAQS—Continued

[Primary and secondary]

Designated area	Designation [a]		Classification	
	Date [1]	Type	Date	Type
Montgomery County		Unclassifiable/Attainment.		
Muscatine County		Unclassifiable/Attainment.		
O'Brien County		Unclassifiable/Attainment.		
Osceola County		Unclassifiable/Attainment.		
Page County		Unclassifiable/Attainment.		
Palo Alto County		Unclassifiable/Attainment.		
Plymouth County		Unclassifiable/Attainment.		
Pocahontas County		Unclassifiable/Attainment.		
Polk County		Unclassifiable/Attainment.		
Pottawattamie County		Unclassifiable/Attainment.		
Poweshiek County		Unclassifiable/Attainment.		
Ringgold County		Unclassifiable/Attainment.		
Sac County		Unclassifiable/Attainment.		
Scott County		Unclassifiable/Attainment.		
Shelby County		Unclassifiable/Attainment.		
Sioux County		Unclassifiable/Attainment.		
Story County		Unclassifiable/Attainment.		
Tama County		Unclassifiable/Attainment.		
Taylor County		Unclassifiable/Attainment.		
Union County		Unclassifiable/Attainment.		
Van Buren County		Unclassifiable/Attainment.		
Wapello County		Unclassifiable/Attainment.		
Warren County		Unclassifiable/Attainment.		
Washington County		Unclassifiable/Attainment.		
Wayne County		Unclassifiable/Attainment.		
Webster County		Unclassifiable/Attainment.		
Winnebago County		Unclassifiable/Attainment.		
Winneshiek County		Unclassifiable/Attainment.		
Woodbury County		Unclassifiable/Attainment.		
Worth County		Unclassifiable/Attainment.		
Wright County		Unclassifiable/Attainment.		

[a] Includes Indian Country located in each county or area, except as otherwise specified.
[1] This date is 90 days after January 5, 2005, unless otherwise noted.

IOWA—1997 24-HOUR $PM_{2.5}$ NAAQS

[Primary and secondary]

Designated area	Designation[a]		Classification	
	Date[1]	Type	Date	Type
Statewide:				
Adair County		Unclassifiable/Attainment.		
Adams County		Unclassifiable/Attainment.		
Allamakee County		Unclassifiable/Attainment.		
Appanoose County		Unclassifiable/Attainment.		
Audubon County		Unclassifiable/Attainment.		
Benton County		Unclassifiable/Attainment.		
Black Hawk County		Unclassifiable/Attainment.		
Boone County		Unclassifiable/Attainment.		
Bremer County		Unclassifiable/Attainment.		
Buchanan County		Unclassifiable/Attainment.		
Buena Vista County		Unclassifiable/Attainment.		
Butler County		Unclassifiable/Attainment.		
Calhoun County		Unclassifiable/Attainment.		
Carroll County		Unclassifiable/Attainment.		
Cass County		Unclassifiable/Attainment.		
Cedar County		Unclassifiable/Attainment.		
Cerro Gordo County		Unclassifiable/Attainment.		
Cherokee County		Unclassifiable/Attainment.		
Chickasaw County		Unclassifiable/Attainment.		
Clarke County		Unclassifiable/Attainment.		
Clay County		Unclassifiable/Attainment.		
Clayton County		Unclassifiable/Attainment.		
Clinton County		Unclassifiable/Attainment.		
Crawford County		Unclassifiable/Attainment.		
Dallas County		Unclassifiable/Attainment.		
Davis County		Unclassifiable/Attainment.		

IOWA—1997 24-HOUR $PM_{2.5}$ NAAQS—Continued

[Primary and secondary]

Designated area	Designation[a]		Classification	
	Date[1]	Type	Date	Type
Decatur County		Unclassifiable/Attainment.		
Delaware County		Unclassifiable/Attainment.		
Des Moines County		Unclassifiable/Attainment.		
Dickinson County		Unclassifiable/Attainment.		
Dubuque County		Unclassifiable/Attainment.		
Emmet County		Unclassifiable/Attainment.		
Fayette County		Unclassifiable/Attainment.		
Floyd County		Unclassifiable/Attainment.		
Franklin County		Unclassifiable/Attainment.		
Fremont County		Unclassifiable/Attainment.		
Greene County		Unclassifiable/Attainment.		
Grundy County		Unclassifiable/Attainment.		
Guthrie County		Unclassifiable/Attainment.		
Hamilton County		Unclassifiable/Attainment.		
Hancock County		Unclassifiable/Attainment.		
Hardin County		Unclassifiable/Attainment.		
Harrison County		Unclassifiable/Attainment.		
Henry County		Unclassifiable/Attainment.		
Howard County		Unclassifiable/Attainment.		
Humboldt County		Unclassifiable/Attainment.		
Ida County		Unclassifiable/Attainment.		
Iowa County		Unclassifiable/Attainment.		
Jackson County		Unclassifiable/Attainment.		
Jasper County		Unclassifiable/Attainment.		
Jefferson County		Unclassifiable/Attainment.		
Johnson County		Unclassifiable/Attainment.		
Jones County		Unclassifiable/Attainment.		
Keokuk County		Unclassifiable/Attainment.		
Kossuth County		Unclassifiable/Attainment.		
Lee County		Unclassifiable/Attainment.		
Linn County		Unclassifiable/Attainment.		
Louisa County		Unclassifiable/Attainment.		
Lucas County		Unclassifiable/Attainment.		
Lyon County		Unclassifiable/Attainment.		
Madison County		Unclassifiable/Attainment.		
Mahaska County		Unclassifiable/Attainment.		
Marion County		Unclassifiable/Attainment.		
Marshall County		Unclassifiable/Attainment.		
Mills County		Unclassifiable/Attainment.		
Mitchell County		Unclassifiable/Attainment.		
Monona County		Unclassifiable/Attainment.		
Monroe County		Unclassifiable/Attainment.		
Montgomery County		Unclassifiable/Attainment.		
Muscatine County		Unclassifiable/Attainment.		
O'Brien County		Unclassifiable/Attainment.		
Osceola County		Unclassifiable/Attainment.		
Page County		Unclassifiable/Attainment.		
Palo Alto County		Unclassifiable/Attainment.		
Plymouth County		Unclassifiable/Attainment.		
Pocahontas County		Unclassifiable/Attainment.		
Polk County		Unclassifiable/Attainment.		
Pottawattamie County		Unclassifiable/Attainment.		
Poweshiek County		Unclassifiable/Attainment.		
Ringgold County		Unclassifiable/Attainment.		
Sac County		Unclassifiable/Attainment.		
Scott County		Unclassifiable/Attainment.		
Shelby County		Unclassifiable/Attainment.		
Sioux County		Unclassifiable/Attainment.		
Story County		Unclassifiable/Attainment.		
Tama County		Unclassifiable/Attainment.		
Taylor County		Unclassifiable/Attainment.		
Union County		Unclassifiable/Attainment.		
Van Buren County		Unclassifiable/Attainment.		
Wapello County		Unclassifiable/Attainment.		
Warren County		Unclassifiable/Attainment.		
Washington County		Unclassifiable/Attainment.		
Wayne County		Unclassifiable/Attainment.		
Webster County		Unclassifiable/Attainment.		
Winnebago County		Unclassifiable/Attainment.		

IOWA—1997 24-HOUR $PM_{2.5}$ NAAQS—Continued

[Primary and secondary]

Designated area	Designation[a]		Classification	
	Date[1]	Type	Date	Type
Winneshiek County		Unclassifiable/Attainment.		
Woodbury County		Unclassifiable/Attainment.		
Worth County		Unclassifiable/Attainment.		
Wright County		Unclassifiable/Attainment.		

[a] Includes Indian Country located in each county or area, except as otherwise specified.
[1] This date is 90 days after January 5, 2005, unless otherwise noted.

IOWA—2006 24-HOUR $PM_{2.5}$ NAAQS

[Primary and secondary]

Designated area	Designation[a]		Classification	
	Date[1]	Type	Date	Type
Statewide:				
Adair County		Unclassifiable/Attainment..		
Adams County		Unclassifiable/Attainment.		
Allamakee County		Unclassifiable/Attainment.		
Appanoose County		Unclassifiable/Attainment.		
Audubon County		Unclassifiable/Attainment.		
Benton County		Unclassifiable/Attainment.		
Black Hawk County		Unclassifiable/Attainment.		
Boone County		Unclassifiable/Attainment.		
Bremer County		Unclassifiable/Attainment.		
Buchanan County		Unclassifiable/Attainment.		
Buena Vista County		Unclassifiable/Attainment.		
Butler County		Unclassifiable/Attainment.		
Calhoun County		Unclassifiable/Attainment.		
Carroll County		Unclassifiable/Attainment.		
Cass County		Unclassifiable/Attainment.		
Cedar County		Unclassifiable/Attainment.		
Cerro Gordo County		Unclassifiable/Attainment.		
Cherokee County		Unclassifiable/Attainment.		
Chickasaw County		Unclassifiable/Attainment.		
Clarke County		Unclassifiable/Attainment.		
Clay County		Unclassifiable/Attainment.		
Clayton County		Unclassifiable/Attainment.		
Clinton County		Unclassifiable/Attainment.		
Crawford County		Unclassifiable/Attainment.		
Dallas County		Unclassifiable/Attainment.		
Davis County		Unclassifiable/Attainment.		
Decatur County		Unclassifiable/Attainment.		
Delaware County		Unclassifiable/Attainment.		
Des Moines County		Unclassifiable/Attainment.		
Dickinson County		Unclassifiable/Attainment.		
Dubuque County		Unclassifiable/Attainment.		
Emmet County		Unclassifiable/Attainment.		
Fayette County		Unclassifiable/Attainment.		
Floyd County		Unclassifiable/Attainment.		
Franklin County		Unclassifiable/Attainment.		
Fremont County		Unclassifiable/Attainment.		
Greene County		Unclassifiable/Attainment.		
Grundy County		Unclassifiable/Attainment.		
Guthrie County		Unclassifiable/Attainment.		
Hamilton County		Unclassifiable/Attainment.		
Hancock County		Unclassifiable/Attainment.		
Hardin County		Unclassifiable/Attainment.		
Harrison County		Unclassifiable/Attainment.		
Henry County		Unclassifiable/Attainment.		
Howard County		Unclassifiable/Attainment.		
Humboldt County		Unclassifiable/Attainment.		
Ida County		Unclassifiable/Attainment.		
Iowa County		Unclassifiable/Attainment.		
Jackson County		Unclassifiable/Attainment.		
Jasper County		Unclassifiable/Attainment.		
Jefferson County		Unclassifiable/Attainment.		
Johnson County		Unclassifiable/Attainment.		
Jones County		Unclassifiable/Attainment.		

IOWA—2006 24-HOUR $PM_{2.5}$ NAAQS—Continued

[Primary and secondary]

Designated area	Designation[a]		Classification	
	Date[1]	Type	Date	Type
Keokuk County		Unclassifiable/Attainment.		
Kossuth County		Unclassifiable/Attainment.		
Lee County		Unclassifiable/Attainment.		
Linn County		Unclassifiable/Attainment.		
Louisa County		Unclassifiable/Attainment.		
Lucas County		Unclassifiable/Attainment.		
Lyon County		Unclassifiable/Attainment.		
Madison County		Unclassifiable/Attainment.		
Mahaska County		Unclassifiable/Attainment.		
Marion County		Unclassifiable/Attainment.		
Marshall County		Unclassifiable/Attainment.		
Mills County		Unclassifiable/Attainment.		
Mitchell County		Unclassifiable/Attainment.		
Monona County		Unclassifiable/Attainment.		
Monroe County		Unclassifiable/Attainment.		
Montgomery County		Unclassifiable/Attainment.		
Muscatine County		Unclassifiable/Attainment.		
O'Brien County		Unclassifiable/Attainment.		
Osceola County		Unclassifiable/Attainment.		
Page County		Unclassifiable/Attainment.		
Palo Alto County		Unclassifiable/Attainment.		
Plymouth County		Unclassifiable/Attainment.		
Pocahontas County		Unclassifiable/Attainment.		
Polk County		Unclassifiable/Attainment.		
Pottawattamie County		Unclassifiable/Attainment.		
Poweshiek County		Unclassifiable/Attainment.		
Ringgold County		Unclassifiable/Attainment.		
Sac County		Unclassifiable/Attainment.		
Scott County		Unclassifiable/Attainment.		
Shelby County		Unclassifiable/Attainment.		
Sioux County		Unclassifiable/Attainment.		
Story County		Unclassifiable/Attainment.		
Tama County		Unclassifiable/Attainment.		
Taylor County		Unclassifiable/Attainment.		
Union County		Unclassifiable/Attainment.		
Van Buren County		Unclassifiable/Attainment.		
Wapello County		Unclassifiable/Attainment.		
Warren County		Unclassifiable/Attainment.		
Washington County		Unclassifiable/Attainment.		
Wayne County		Unclassifiable/Attainment.		
Webster County		Unclassifiable/Attainment.		
Winnebago County		Unclassifiable/Attainment.		
Winneshiek County		Unclassifiable/Attainment.		
Woodbury County		Unclassifiable/Attainment.		
Worth County		Unclassifiable/Attainment.		
Wright County		Unclassifiable/Attainment.		

[a]Includes Indian Country located in each county or area, except as otherwise specified.
[1]This date is 30 days after November 13, 2009, unless otherwise noted.

* * * * *

■ 18. Section 81.317 is amended as follows:

■ a. By removing the tables titled ''Kansas—$PM_{2.5}$ (Annual NAAQS)'' and ''Kansas—$PM_{2.5}$ [24-hour NAAQS]''.

■ b. By adding three tables titled ''Kansas—1997 Annual $PM_{2.5}$ NAAQS (Primary and Secondary)'' and ''Kansas—1997 24-hour $PM_{2.5}$ NAAQS (Primary and Secondary)'' and ''Kansas—2006 24-hour $PM_{2.5}$ NAAQS (Primary and Secondary)'' before the table titled ''Kansas—NO_2 (1971 Annual Standard)''

The additions read as follows:

§ 81.317 Kansas.

* * * * *

KANSAS—1997 ANNUAL $PM_{2.5}$ NAAQS

[Primary and secondary]

Designated area	Designation[a]		Classification	
	Date[1]	Type	Date	Type
Statewide:				
Allen County		Unclassifiable/Attainment.		

KANSAS—1997 ANNUAL $PM_{2.5}$ NAAQS—Continued

[Primary and secondary]

Designated area	Designation [a]		Classification	
	Date [1]	Type	Date	Type
Anderson County		Unclassifiable/Attainment.		
Atchison County		Unclassifiable/Attainment.		
Barber County		Unclassifiable/Attainment.		
Barton County		Unclassifiable/Attainment.		
Bourbon County		Unclassifiable/Attainment.		
Brown County		Unclassifiable/Attainment.		
Butler County		Unclassifiable/Attainment.		
Chase County		Unclassifiable/Attainment.		
Chautauqua County		Unclassifiable/Attainment.		
Cherokee County		Unclassifiable/Attainment.		
Cheyenne County		Unclassifiable/Attainment.		
Clark County		Unclassifiable/Attainment.		
Clay County		Unclassifiable/Attainment.		
Cloud County		Unclassifiable/Attainment.		
Coffey County		Unclassifiable/Attainment.		
Comanche County		Unclassifiable/Attainment.		
Cowley County		Unclassifiable/Attainment.		
Crawford County		Unclassifiable/Attainment.		
Decatur County		Unclassifiable/Attainment.		
Dickinson County		Unclassifiable/Attainment.		
Doniphan County		Unclassifiable/Attainment.		
Douglas County		Unclassifiable/Attainment.		
Edwards County		Unclassifiable/Attainment.		
Elk County		Unclassifiable/Attainment.		
Ellis County		Unclassifiable/Attainment.		
Ellsworth County		Unclassifiable/Attainment.		
Finney County		Unclassifiable/Attainment.		
Ford County		Unclassifiable/Attainment.		
Franklin County		Unclassifiable/Attainment.		
Geary County		Unclassifiable/Attainment.		
Gove County		Unclassifiable/Attainment.		
Graham County		Unclassifiable/Attainment.		
Grant County		Unclassifiable/Attainment.		
Gray County		Unclassifiable/Attainment.		
Greeley County		Unclassifiable/Attainment.		
Greenwood County		Unclassifiable/Attainment.		
Hamilton County		Unclassifiable/Attainment.		
Harper County		Unclassifiable/Attainment.		
Harvey County		Unclassifiable/Attainment.		
Haskell County		Unclassifiable/Attainment.		
Hodgeman County		Unclassifiable/Attainment.		
Jackson County		Unclassifiable/Attainment.		
Jefferson County		Unclassifiable/Attainment.		
Jewell County		Unclassifiable/Attainment.		
Johnson County		Unclassifiable/Attainment.		
Kearny County		Unclassifiable/Attainment.		
Kingman County		Unclassifiable/Attainment.		
Kiowa County		Unclassifiable/Attainment.		
Labette County		Unclassifiable/Attainment.		
Lane County		Unclassifiable/Attainment.		
Leavenworth County		Unclassifiable/Attainment.		
Lincoln County		Unclassifiable/Attainment.		
Linn County		Unclassifiable/Attainment.		
Logan County		Unclassifiable/Attainment.		
Lyon County		Unclassifiable/Attainment.		
McPherson County		Unclassifiable/Attainment.		
Marion County		Unclassifiable/Attainment.		
Marshall County		Unclassifiable/Attainment.		
Meade County		Unclassifiable/Attainment.		
Miami County		Unclassifiable/Attainment.		
Mitchell County		Unclassifiable/Attainment.		
Montgomery County		Unclassifiable/Attainment.		
Morris County		Unclassifiable/Attainment.		
Morton County		Unclassifiable/Attainment.		
Nemaha County		Unclassifiable/Attainment.		
Neosho County		Unclassifiable/Attainment.		
Ness County		Unclassifiable/Attainment.		
Norton County		Unclassifiable/Attainment.		
Osage County		Unclassifiable/Attainment.		

KANSAS—1997 ANNUAL $PM_{2.5}$ NAAQS—Continued

[Primary and secondary]

Designated area	Designation [a]		Classification	
	Date [1]	Type	Date	Type
Osborne County		Unclassifiable/Attainment.		
Ottawa County		Unclassifiable/Attainment.		
Pawnee County		Unclassifiable/Attainment.		
Phillips County		Unclassifiable/Attainment.		
Pottawatomie County		Unclassifiable/Attainment.		
Pratt County		Unclassifiable/Attainment.		
Rawlins County		Unclassifiable/Attainment.		
Reno County		Unclassifiable/Attainment.		
Republic County		Unclassifiable/Attainment.		
Rice County		Unclassifiable/Attainment.		
Riley County		Unclassifiable/Attainment.		
Rooks County		Unclassifiable/Attainment.		
Rush County		Unclassifiable/Attainment.		
Russell County		Unclassifiable/Attainment.		
Saline County		Unclassifiable/Attainment.		
Scott County		Unclassifiable/Attainment.		
Sedgwick County		Unclassifiable/Attainment.		
Seward County		Unclassifiable/Attainment.		
Shawnee County		Unclassifiable/Attainment.		
Sheridan County		Unclassifiable/Attainment.		
Sherman County		Unclassifiable/Attainment.		
Smith County		Unclassifiable/Attainment.		
Stafford County		Unclassifiable/Attainment.		
Stanton County		Unclassifiable/Attainment.		
Stevens County		Unclassifiable/Attainment.		
Sumner County		Unclassifiable/Attainment.		
Thomas County		Unclassifiable/Attainment.		
Trego County		Unclassifiable/Attainment.		
Wabaunsee County		Unclassifiable/Attainment.		
Wallace County		Unclassifiable/Attainment.		
Washington County		Unclassifiable/Attainment.		
Wichita County		Unclassifiable/Attainment.		
Wilson County		Unclassifiable/Attainment.		
Woodson County		Unclassifiable/Attainment.		
Wyandotte County		Unclassifiable/Attainment.		

[a] Includes Indian Country located in each county or area, except as otherwise specified.
[1] This date is 90 days after January 5, 2005, unless otherwise noted.

KANSAS—1997 24-HOUR $PM_{2.5}$ NAAQS

[Primary and secondary]

Designated area	Designation [a]		Classification	
	Date [1]	Type	Date	Type
Statewide:				
Allen County		Unclassifiable/Attainment.		
Anderson County		Unclassifiable/Attainment.		
Atchison County		Unclassifiable/Attainment.		
Barber County		Unclassifiable/Attainment.		
Barton County		Unclassifiable/Attainment.		
Bourbon County		Unclassifiable/Attainment.		
Brown County		Unclassifiable/Attainment.		
Butler County		Unclassifiable/Attainment.		
Chase County		Unclassifiable/Attainment.		
Chautauqua County		Unclassifiable/Attainment.		
Cherokee County		Unclassifiable/Attainment.		
Cheyenne County		Unclassifiable/Attainment.		
Clark County		Unclassifiable/Attainment.		
Clay County		Unclassifiable/Attainment.		
Cloud County		Unclassifiable/Attainment.		
Coffey County		Unclassifiable/Attainment.		
Comanche County		Unclassifiable/Attainment.		
Cowley County		Unclassifiable/Attainment.		
Crawford County		Unclassifiable/Attainment.		
Decatur County		Unclassifiable/Attainment.		
Dickinson County		Unclassifiable/Attainment.		
Doniphan County		Unclassifiable/Attainment.		

KANSAS—1997 24-HOUR $PM_{2.5}$ NAAQS—Continued

[Primary and secondary]

Designated area	Designation [a]		Classification	
	Date [1]	Type	Date	Type
Douglas County		Unclassifiable/Attainment.		
Edwards County		Unclassifiable/Attainment.		
Elk County		Unclassifiable/Attainment.		
Ellis County		Unclassifiable/Attainment.		
Ellsworth County		Unclassifiable/Attainment.		
Finney County		Unclassifiable/Attainment.		
Ford County		Unclassifiable/Attainment.		
Franklin County		Unclassifiable/Attainment.		
Geary County		Unclassifiable/Attainment.		
Gove County		Unclassifiable/Attainment.		
Graham County		Unclassifiable/Attainment.		
Grant County		Unclassifiable/Attainment.		
Gray County		Unclassifiable/Attainment.		
Greeley County		Unclassifiable/Attainment.		
Greenwood County		Unclassifiable/Attainment.		
Hamilton County		Unclassifiable/Attainment.		
Harper County		Unclassifiable/Attainment.		
Harvey County		Unclassifiable/Attainment.		
Haskell County		Unclassifiable/Attainment.		
Hodgeman County		Unclassifiable/Attainment.		
Jackson County		Unclassifiable/Attainment.		
Jefferson County		Unclassifiable/Attainment.		
Jewell County		Unclassifiable/Attainment.		
Johnson County		Unclassifiable/Attainment.		
Kearny County		Unclassifiable/Attainment.		
Kingman County		Unclassifiable/Attainment.		
Kiowa County		Unclassifiable/Attainment.		
Labette County		Unclassifiable/Attainment.		
Lane County		Unclassifiable/Attainment.		
Leavenworth County		Unclassifiable/Attainment.		
Lincoln County		Unclassifiable/Attainment.		
Linn County		Unclassifiable/Attainment.		
Logan County		Unclassifiable/Attainment.		
Lyon County		Unclassifiable/Attainment.		
McPherson County		Unclassifiable/Attainment.		
Marion County		Unclassifiable/Attainment.		
Marshall County		Unclassifiable/Attainment.		
Meade County		Unclassifiable/Attainment.		
Miami County		Unclassifiable/Attainment.		
Mitchell County		Unclassifiable/Attainment.		
Montgomery County		Unclassifiable/Attainment.		
Morris County		Unclassifiable/Attainment.		
Morton County		Unclassifiable/Attainment.		
Nemaha County		Unclassifiable/Attainment.		
Neosho County		Unclassifiable/Attainment.		
Ness County		Unclassifiable/Attainment.		
Norton County		Unclassifiable/Attainment.		
Osage County		Unclassifiable/Attainment.		
Osborne County		Unclassifiable/Attainment.		
Ottawa County		Unclassifiable/Attainment.		
Pawnee County		Unclassifiable/Attainment.		
Phillips County		Unclassifiable/Attainment.		
Pottawatomie County		Unclassifiable/Attainment.		
Pratt County		Unclassifiable/Attainment.		
Rawlins County		Unclassifiable/Attainment.		
Reno County		Unclassifiable/Attainment.		
Republic County		Unclassifiable/Attainment.		
Rice County		Unclassifiable/Attainment.		
Riley County		Unclassifiable/Attainment.		
Rooks County		Unclassifiable/Attainment.		
Rush County		Unclassifiable/Attainment.		
Russell County		Unclassifiable/Attainment.		
Saline County		Unclassifiable/Attainment.		
Scott County		Unclassifiable/Attainment.		
Sedgwick County		Unclassifiable/Attainment.		
Seward County		Unclassifiable/Attainment.		
Shawnee County		Unclassifiable/Attainment.		
Sheridan County		Unclassifiable/Attainment.		
Sherman County		Unclassifiable/Attainment.		

KANSAS—1997 24-HOUR $PM_{2.5}$ NAAQS—Continued

[Primary and secondary]

Designated area	Designation [a]		Classification	
	Date [1]	Type	Date	Type
Smith County		Unclassifiable/Attainment.		
Stafford County		Unclassifiable/Attainment.		
Stanton County		Unclassifiable/Attainment.		
Stevens County		Unclassifiable/Attainment.		
Sumner County		Unclassifiable/Attainment.		
Thomas County		Unclassifiable/Attainment.		
Trego County		Unclassifiable/Attainment.		
Wabaunsee County		Unclassifiable/Attainment.		
Wallace County		Unclassifiable/Attainment.		
Washington County		Unclassifiable/Attainment.		
Wichita County		Unclassifiable/Attainment.		
Wilson County		Unclassifiable/Attainment.		
Woodson County		Unclassifiable/Attainment.		
Wyandotte County		Unclassifiable/Attainment.		

[a] Includes Indian Country located in each county or area, except as otherwise specified.
[1] This date is 90 days after January 5, 2005, unless otherwise noted.

KANSAS—2006 24-HOUR $PM_{2.5}$ NAAQS

[Primary and secondary]

Designated area	Designation [a]		Classification	
	Date [1]	Type	Date	Type
Statewide:				
Allen County		Unclassifiable/Attainment.		
Anderson County		Unclassifiable/Attainment.		
Atchison County		Unclassifiable/Attainment.		
Barber County		Unclassifiable/Attainment.		
Barton County		Unclassifiable/Attainment.		
Bourbon County		Unclassifiable/Attainment.		
Brown County		Unclassifiable/Attainment.		
Butler County		Unclassifiable/Attainment.		
Chase County		Unclassifiable/Attainment.		
Chautauqua County		Unclassifiable/Attainment.		
Cherokee County		Unclassifiable/Attainment.		
Cheyenne County		Unclassifiable/Attainment.		
Clark County		Unclassifiable/Attainment.		
Clay County		Unclassifiable/Attainment.		
Cloud County		Unclassifiable/Attainment.		
Coffey County		Unclassifiable/Attainment.		
Comanche County		Unclassifiable/Attainment.		
Cowley County		Unclassifiable/Attainment.		
Crawford County		Unclassifiable/Attainment.		
Decatur County		Unclassifiable/Attainment.		
Dickinson County		Unclassifiable/Attainment.		
Doniphan County		Unclassifiable/Attainment.		
Douglas County		Unclassifiable/Attainment.		
Edwards County		Unclassifiable/Attainment.		
Elk County		Unclassifiable/Attainment.		
Ellis County		Unclassifiable/Attainment.		
Ellsworth County		Unclassifiable/Attainment.		
Finney County		Unclassifiable/Attainment.		
Ford County		Unclassifiable/Attainment.		
Franklin County		Unclassifiable/Attainment.		
Geary County		Unclassifiable/Attainment.		
Gove County		Unclassifiable/Attainment.		
Graham County		Unclassifiable/Attainment.		
Grant County		Unclassifiable/Attainment.		
Gray County		Unclassifiable/Attainment.		
Greeley County		Unclassifiable/Attainment.		
Greenwood County		Unclassifiable/Attainment.		
Hamilton County		Unclassifiable/Attainment.		
Harper County		Unclassifiable/Attainment.		
Harvey County		Unclassifiable/Attainment.		
Haskell County		Unclassifiable/Attainment.		
Hodgeman County		Unclassifiable/Attainment.		
Jackson County		Unclassifiable/Attainment.		

KANSAS—2006 24-HOUR $PM_{2.5}$ NAAQS—Continued

[Primary and secondary]

Designated area	Designation [a]		Classification	
	Date [1]	Type	Date	Type
Jefferson County		Unclassifiable/Attainment.		
Jewell County		Unclassifiable/Attainment.		
Johnson County		Unclassifiable/Attainment.		
Kearny County		Unclassifiable/Attainment.		
Kingman County		Unclassifiable/Attainment.		
Kiowa County		Unclassifiable/Attainment.		
Labette County		Unclassifiable/Attainment.		
Lane County		Unclassifiable/Attainment.		
Leavenworth County		Unclassifiable/Attainment.		
Lincoln County		Unclassifiable/Attainment.		
Linn County		Unclassifiable/Attainment.		
Logan County		Unclassifiable/Attainment.		
Lyon County		Unclassifiable/Attainment.		
McPherson County		Unclassifiable/Attainment.		
Marion County		Unclassifiable/Attainment.		
Marshall County		Unclassifiable/Attainment.		
Meade County		Unclassifiable/Attainment.		
Miami County		Unclassifiable/Attainment.		
Mitchell County		Unclassifiable/Attainment.		
Montgomery County		Unclassifiable/Attainment.		
Morris County		Unclassifiable/Attainment.		
Morton County		Unclassifiable/Attainment.		
Nemaha County		Unclassifiable/Attainment.		
Neosho County		Unclassifiable/Attainment.		
Ness County		Unclassifiable/Attainment.		
Norton County		Unclassifiable/Attainment.		
Osage County		Unclassifiable/Attainment.		
Osborne County		Unclassifiable/Attainment.		
Ottawa County		Unclassifiable/Attainment.		
Pawnee County		Unclassifiable/Attainment.		
Phillips County		Unclassifiable/Attainment.		
Pottawatomie County		Unclassifiable/Attainment.		
Pratt County		Unclassifiable/Attainment.		
Rawlins County		Unclassifiable/Attainment.		
Reno County		Unclassifiable/Attainment.		
Republic County		Unclassifiable/Attainment.		
Rice County		Unclassifiable/Attainment.		
Riley County		Unclassifiable/Attainment.		
Rooks County		Unclassifiable/Attainment.		
Rush County		Unclassifiable/Attainment.		
Russell County		Unclassifiable/Attainment.		
Saline County		Unclassifiable/Attainment.		
Scott County		Unclassifiable/Attainment.		
Sedgwick County		Unclassifiable/Attainment.		
Seward County		Unclassifiable/Attainment.		
Shawnee County		Unclassifiable/Attainment.		
Sheridan County		Unclassifiable/Attainment.		
Sherman County		Unclassifiable/Attainment.		
Smith County		Unclassifiable/Attainment.		
Stafford County		Unclassifiable/Attainment.		
Stanton County		Unclassifiable/Attainment.		
Stevens County		Unclassifiable/Attainment.		
Sumner County		Unclassifiable/Attainment.		
Thomas County		Unclassifiable/Attainment.		
Trego County		Unclassifiable/Attainment.		
Wabaunsee County		Unclassifiable/Attainment.		
Wallace County		Unclassifiable/Attainment.		
Washington County		Unclassifiable/Attainment.		
Wichita County		Unclassifiable/Attainment.		
Wilson County		Unclassifiable/Attainment.		
Woodson County		Unclassifiable/Attainment.		
Wyandotte County		Unclassifiable/Attainment.		

[a] Includes Indian Country located in each county or area, except as otherwise specified.
[1] This date is 30 days after November 13, 2009, unless otherwise noted.

* * * * *

■ 19. Section 81.318 is amended as follows:

■ a. By removing the tables titled ''Kentucky—$PM_{2.5}$ (Annual NAAQS)'' and ''Kentucky—$PM_{2.5}$ [24-hour NAAQS]''.

■ b. By adding three tables titled ''Kentucky—1997 Annual $PM_{2.5}$ NAAQS (Primary and Secondary)'' and ''Kentucky—1997 24-hour $PM_{2.5}$ NAAQS (Primary and Secondary)'' and ''Kentucky—2006 24-hour $PM_{2.5}$ NAAQS (Primary and Secondary)'' before the table titled ''Kentucky—NO_2 (1971 Annual Standard)''.

The additions read as follows:

§ 81.318 Kentucky.

* * * * *

KENTUCKY—1997 ANNUAL $PM_{2.5}$ NAAQS

[Primary and secondary]

Designated area	Designation [a]		Classification	
	Date [1]	Type	Date [2]	Type
Cincinnati-Hamilton, OH–KY–IN:				
Boone County	12/15/11	Attainment.		
Campbell County	12/15/11	Attainment.		
Kenton County	12/15/11	Attainment.		
Huntington-Ashland, WV–KY–OH:				
Boyd County	12/26/12	Attainment.		
Lawrence County (part)	12/26/12	Attainment.		
The area described by U.S. Census 2000 block group identifier 21–127–9901–6.				
Louisville, KY–IN:				
Bullitt County		Nonattainment		Moderate.
Jefferson County		Nonattainment		Moderate.
Rest of State:				
Adair County		Unclassifiable/Attainment.		
Allen County		Unclassifiable/Attainment.		
Anderson County		Unclassifiable/Attainment.		
Ballard County		Unclassifiable/Attainment.		
Barren County		Unclassifiable/Attainment.		
Bath County		Unclassifiable/Attainment.		
Bell County		Unclassifiable/Attainment.		
Bourbon County		Unclassifiable/Attainment.		
Boyle County		Unclassifiable/Attainment.		
Bracken County		Unclassifiable/Attainment.		
Breathitt County		Unclassifiable/Attainment.		
Breckinridge County		Unclassifiable/Attainment.		
Butler County		Unclassifiable/Attainment.		
Caldwell County		Unclassifiable/Attainment.		
Calloway County		Unclassifiable/Attainment.		
Carlisle County		Unclassifiable/Attainment.		
Carroll County		Unclassifiable/Attainment.		
Carter County		Unclassifiable/Attainment.		
Casey County		Unclassifiable/Attainment.		
Christian County		Unclassifiable/Attainment.		
Clark County		Unclassifiable/Attainment.		
Clay County		Unclassifiable/Attainment.		
Clinton County		Unclassifiable/Attainment.		
Crittenden County		Unclassifiable/Attainment.		
Cumberland County		Unclassifiable/Attainment.		
Daviess County		Unclassifiable/Attainment.		
Edmonson County		Unclassifiable/Attainment.		
Elliott County		Unclassifiable/Attainment.		
Estill County		Unclassifiable/Attainment.		
Fayette County		Unclassifiable/Attainment.		
Fleming County		Unclassifiable/Attainment.		
Floyd County		Unclassifiable/Attainment.		
Franklin County		Unclassifiable/Attainment.		
Fulton County		Unclassifiable/Attainment.		
Gallatin County		Unclassifiable/Attainment.		
Garrard County		Unclassifiable/Attainment.		
Grant County		Unclassifiable/Attainment.		
Graves County		Unclassifiable/Attainment.		
Grayson County		Unclassifiable/Attainment.		
Green County		Unclassifiable/Attainment.		
Greenup County		Unclassifiable/Attainment.		
Hancock County		Unclassifiable/Attainment.		
Hardin County		Unclassifiable/Attainment.		
Harlan County		Unclassifiable/Attainment.		
Harrison County		Unclassifiable/Attainment.		
Hart County		Unclassifiable/Attainment.		
Henderson County		Unclassifiable/Attainment.		

KENTUCKY—1997 ANNUAL $PM_{2.5}$ NAAQS—Continued

[Primary and secondary]

Designated area	Designation [a]		Classification	
	Date [1]	Type	Date [2]	Type
Henry County		Unclassifiable/Attainment.		
Hickman County		Unclassifiable/Attainment.		
Hopkins County		Unclassifiable/Attainment.		
Jackson County		Unclassifiable/Attainment.		
Jessamine County		Unclassifiable/Attainment.		
Johnson County		Unclassifiable/Attainment.		
Knott County		Unclassifiable/Attainment.		
Knox County		Unclassifiable/Attainment.		
Larue County		Unclassifiable/Attainment.		
Laurel County		Unclassifiable/Attainment.		
Lawrence County (remainder)		Unclassifiable/Attainment.		
Lee County		Unclassifiable/Attainment.		
Leslie County		Unclassifiable/Attainment.		
Letcher County		Unclassifiable/Attainment.		
Lewis County		Unclassifiable/Attainment.		
Lincoln County		Unclassifiable/Attainment.		
Livingston County		Unclassifiable/Attainment.		
Logan County		Unclassifiable/Attainment.		
Lyon County		Unclassifiable/Attainment.		
McCracken County		Unclassifiable/Attainment.		
McCreary County		Unclassifiable/Attainment.		
McLean County		Unclassifiable/Attainment.		
Madison County		Unclassifiable/Attainment.		
Magoffin County		Unclassifiable/Attainment.		
Marion County		Unclassifiable/Attainment.		
Marshall County		Unclassifiable/Attainment.		
Martin County		Unclassifiable/Attainment.		
Mason County		Unclassifiable/Attainment.		
Meade County		Unclassifiable/Attainment.		
Menifee County		Unclassifiable/Attainment.		
Mercer County		Unclassifiable/Attainment.		
The area described by U.S. Census 2000 block group identifier 21–167–9605–1.				
Metcalfe County		Unclassifiable/Attainment.		
Monroe County		Unclassifiable/Attainment.		
Montgomery County		Unclassifiable/Attainment.		
Morgan County		Unclassifiable/Attainment.		
Muhlenberg County		Unclassifiable/Attainment.		
Nelson County		Unclassifiable/Attainment.		
Nicholas County		Unclassifiable/Attainment.		
Ohio County		Unclassifiable/Attainment.		
Oldham County		Unclassifiable/Attainment.		
Owen County		Unclassifiable/Attainment.		
Owsley County		Unclassifiable/Attainment.		
Pendleton County		Unclassifiable/Attainment.		
Perry County		Unclassifiable/Attainment.		
Pike County		Unclassifiable/Attainment.		
Powell County		Unclassifiable/Attainment.		
Pulaski County		Unclassifiable/Attainment.		
Robertson County		Unclassifiable/Attainment.		
Rockcastle County		Unclassifiable/Attainment.		
Rowan County		Unclassifiable/Attainment.		
Russell County		Unclassifiable/Attainment.		
Scott County		Unclassifiable/Attainment.		
Shelby County		Unclassifiable/Attainment.		
Simpson County		Unclassifiable/Attainment.		
Spencer County		Unclassifiable/Attainment.		
Taylor County		Unclassifiable/Attainment.		
Todd County		Unclassifiable/Attainment.		
Trigg County		Unclassifiable/Attainment.		
Trimble County		Unclassifiable/Attainment.		
Union County		Unclassifiable/Attainment.		
Warren County		Unclassifiable/Attainment.		
Washington County		Unclassifiable/Attainment.		
Wayne County		Unclassifiable/Attainment.		
Webster County		Unclassifiable/Attainment.		
Whitley County		Unclassifiable/Attainment.		
Wolfe County		Unclassifiable/Attainment.		

KENTUCKY—1997 ANNUAL $PM_{2.5}$ NAAQS—Continued

[Primary and secondary]

Designated area	Designation [a]		Classification	
	Date [1]	Type	Date [2]	Type
Woodford County		Unclassifiable/Attainment.		

[a] Includes Indian Country located in each county or area, except as otherwise specified.
[1] This date is 90 days after January 5, 2005, unless otherwise noted.
[2] This date is July 2, 2014, unless otherwise noted.

KENTUCKY—1997 24-HOUR $PM_{2.5}$ NAAQS

[Primary and secondary]

Designated area	Designation [a]		Classification	
	Date [1]	Type	Date	Type
Statewide:				
Adair County		Unclassifiable/Attainment.		
Allen County		Unclassifiable/Attainment.		
Anderson County		Unclassifiable/Attainment.		
Ballard County		Unclassifiable/Attainment.		
Barren County		Unclassifiable/Attainment.		
Bath County		Unclassifiable/Attainment.		
Bell County		Unclassifiable/Attainment.		
Boone County		Unclassifiable/Attainment.		
Bourbon County		Unclassifiable/Attainment.		
Boyd County		Unclassifiable/Attainment.		
Boyle County		Unclassifiable/Attainment.		
Bracken County		Unclassifiable/Attainment.		
Breathitt County		Unclassifiable/Attainment.		
Breckinridge County		Unclassifiable/Attainment.		
Bullitt County		Unclassifiable/Attainment.		
Butler County		Unclassifiable/Attainment.		
Caldwell County		Unclassifiable/Attainment.		
Calloway County		Unclassifiable/Attainment.		
Campbell County		Unclassifiable/Attainment.		
Carlisle County		Unclassifiable/Attainment.		
Carroll County		Unclassifiable/Attainment.		
Carter County		Unclassifiable/Attainment.		
Casey County		Unclassifiable/Attainment.		
Christian County		Unclassifiable/Attainment.		
Clark County		Unclassifiable/Attainment.		
Clay County		Unclassifiable/Attainment.		
Clinton County		Unclassifiable/Attainment.		
Crittenden County		Unclassifiable/Attainment.		
Cumberland County		Unclassifiable/Attainment.		
Daviess County		Unclassifiable/Attainment.		
Edmonson County		Unclassifiable/Attainment.		
Elliott County		Unclassifiable/Attainment.		
Estill County		Unclassifiable/Attainment.		
Fayette County		Unclassifiable/Attainment.		
Fleming County		Unclassifiable/Attainment.		
Floyd County		Unclassifiable/Attainment.		
Franklin County		Unclassifiable/Attainment.		
Fulton County		Unclassifiable/Attainment.		
Gallatin County		Unclassifiable/Attainment.		
Garrard County		Unclassifiable/Attainment.		
Grant County		Unclassifiable/Attainment.		
Graves County		Unclassifiable/Attainment.		
Grayson County		Unclassifiable/Attainment.		
Green County		Unclassifiable/Attainment.		
Greenup County		Unclassifiable/Attainment.		
Hancock County		Unclassifiable/Attainment.		
Hardin County		Unclassifiable/Attainment.		
Harlan County		Unclassifiable/Attainment.		
Harrison County		Unclassifiable/Attainment.		
Hart County		Unclassifiable/Attainment.		
Henderson County		Unclassifiable/Attainment.		
Henry County		Unclassifiable/Attainment.		
Hickman County		Unclassifiable/Attainment.		
Hopkins County		Unclassifiable/Attainment.		
Jackson County		Unclassifiable/Attainment.		

KENTUCKY—1997 24-HOUR $PM_{2.5}$ NAAQS—Continued

[Primary and secondary]

Designated area	Designation [a]		Classification	
	Date [1]	Type	Date	Type
Jefferson County		Unclassifiable/Attainment.		
Jessamine County		Unclassifiable/Attainment.		
Johnson County		Unclassifiable/Attainment.		
Kenton County		Unclassifiable/Attainment.		
Knott County		Unclassifiable/Attainment.		
Knox County		Unclassifiable/Attainment.		
Larue County		Unclassifiable/Attainment.		
Laurel County		Unclassifiable/Attainment.		
Lawrence County		Unclassifiable/Attainment.		
Lee County		Unclassifiable/Attainment.		
Leslie County		Unclassifiable/Attainment.		
Letcher County		Unclassifiable/Attainment.		
Lewis County		Unclassifiable/Attainment.		
Lincoln County		Unclassifiable/Attainment.		
Livingston County		Unclassifiable/Attainment.		
Logan County		Unclassifiable/Attainment.		
Lyon County		Unclassifiable/Attainment.		
McCracken County		Unclassifiable/Attainment.		
McCreary County		Unclassifiable/Attainment.		
McLean County		Unclassifiable/Attainment.		
Madison County		Unclassifiable/Attainment.		
Magoffin County		Unclassifiable/Attainment.		
Marion County		Unclassifiable/Attainment.		
Marshall County		Unclassifiable/Attainment.		
Martin County		Unclassifiable/Attainment.		
Mason County		Unclassifiable/Attainment.		
Meade County		Unclassifiable/Attainment.		
Menifee County		Unclassifiable/Attainment.		
Mercer County		Unclassifiable/Attainment.		
Metcalfe County		Unclassifiable/Attainment.		
Monroe County		Unclassifiable/Attainment.		
Montgomery County		Unclassifiable/Attainment.		
Morgan County		Unclassifiable/Attainment.		
Muhlenberg County		Unclassifiable/Attainment.		
Nelson County		Unclassifiable/Attainment.		
Nicholas County		Unclassifiable/Attainment.		
Ohio County		Unclassifiable/Attainment.		
Oldham County		Unclassifiable/Attainment.		
Owen County		Unclassifiable/Attainment.		
Owsley County		Unclassifiable/Attainment.		
Pendleton County		Unclassifiable/Attainment.		
Perry County		Unclassifiable/Attainment.		
Pike County		Unclassifiable/Attainment.		
Powell County		Unclassifiable/Attainment.		
Pulaski County		Unclassifiable/Attainment.		
Robertson County		Unclassifiable/Attainment.		
Rockcastle County		Unclassifiable/Attainment.		
Rowan County		Unclassifiable/Attainment.		
Russell County		Unclassifiable/Attainment.		
Scott County		Unclassifiable/Attainment.		
Shelby County		Unclassifiable/Attainment.		
Simpson County		Unclassifiable/Attainment.		
Spencer County		Unclassifiable/Attainment.		
Taylor County		Unclassifiable/Attainment.		
Todd County		Unclassifiable/Attainment.		
Trigg County		Unclassifiable/Attainment.		
Trimble County		Unclassifiable/Attainment.		
Union County		Unclassifiable/Attainment.		
Warren County		Unclassifiable/Attainment.		
Washington County		Unclassifiable/Attainment.		
Wayne County		Unclassifiable/Attainment.		
Webster County		Unclassifiable/Attainment.		
Whitley County		Unclassifiable/Attainment.		
Wolfe County		Unclassifiable/Attainment.		
Woodford County		Unclassifiable/Attainment.		

[a] Includes Indian Country located in each county or area, except as otherwise specified.
[1] This date is 90 days after January 5, 2005, unless otherwise noted.

KENTUCKY—2006 24-HOUR $PM_{2.5}$ NAAQS

[Primary and secondary]

Designated area	Designation [a]		Classification	
	Date [1]	Type	Date	Type
Statewide:				
Adair County		Unclassifiable/Attainment.		
Allen County		Unclassifiable/Attainment.		
Anderson County		Unclassifiable/Attainment.		
Ballard County		Unclassifiable/Attainment.		
Barren County		Unclassifiable/Attainment.		
Bath County		Unclassifiable/Attainment.		
Bell County		Unclassifiable/Attainment.		
Boone County		Unclassifiable/Attainment.		
Bourbon County		Unclassifiable/Attainment.		
Boyd County		Unclassifiable/Attainment.		
Boyle County		Unclassifiable/Attainment.		
Bracken County		Unclassifiable/Attainment.		
Breathitt County		Unclassifiable/Attainment.		
Breckinridge County		Unclassifiable/Attainment.		
Bullitt County		Unclassifiable/Attainment.		
Butler County		Unclassifiable/Attainment.		
Caldwell County		Unclassifiable/Attainment.		
Calloway County		Unclassifiable/Attainment.		
Campbell County		Unclassifiable/Attainment.		
Carlisle County		Unclassifiable/Attainment.		
Carroll County		Unclassifiable/Attainment.		
Carter County		Unclassifiable/Attainment.		
Casey County		Unclassifiable/Attainment.		
Christian County		Unclassifiable/Attainment.		
Clark County		Unclassifiable/Attainment.		
Clay County		Unclassifiable/Attainment.		
Clinton County		Unclassifiable/Attainment.		
Crittenden County		Unclassifiable/Attainment.		
Cumberland County		Unclassifiable/Attainment.		
Daviess County		Unclassifiable/Attainment.		
Edmonson County		Unclassifiable/Attainment.		
Elliott County		Unclassifiable/Attainment.		
Estill County		Unclassifiable/Attainment.		
Fayette County		Unclassifiable/Attainment.		
Fleming County		Unclassifiable/Attainment.		
Floyd County		Unclassifiable/Attainment.		
Franklin County		Unclassifiable/Attainment.		
Fulton County		Unclassifiable/Attainment.		
Gallatin County		Unclassifiable/Attainment.		
Garrard County		Unclassifiable/Attainment.		
Grant County		Unclassifiable/Attainment.		
Graves County		Unclassifiable/Attainment.		
Grayson County		Unclassifiable/Attainment.		
Green County		Unclassifiable/Attainment.		
Greenup County		Unclassifiable/Attainment.		
Hancock County		Unclassifiable/Attainment.		
Hardin County		Unclassifiable/Attainment.		
Harlan County		Unclassifiable/Attainment.		
Harrison County		Unclassifiable/Attainment.		
Hart County		Unclassifiable/Attainment.		
Henderson County		Unclassifiable/Attainment.		
Henry County		Unclassifiable/Attainment.		
Hickman County		Unclassifiable/Attainment.		
Hopkins County		Unclassifiable/Attainment.		
Jackson County		Unclassifiable/Attainment.		
Jefferson County		Unclassifiable/Attainment.		
Jessamine County		Unclassifiable/Attainment.		
Johnson County		Unclassifiable/Attainment.		
Kenton County		Unclassifiable/Attainment.		
Knott County		Unclassifiable/Attainment.		
Knox County		Unclassifiable/Attainment.		
Larue County		Unclassifiable/Attainment.		
Laurel County		Unclassifiable/Attainment.		
Lawrence County		Unclassifiable/Attainment.		
Lee County		Unclassifiable/Attainment.		
Leslie County		Unclassifiable/Attainment.		
Letcher County		Unclassifiable/Attainment.		
Lewis County		Unclassifiable/Attainment.		

KENTUCKY—2006 24-HOUR $PM_{2.5}$ NAAQS—Continued

[Primary and secondary]

Designated area	Designation [a]		Classification	
	Date [1]	Type	Date	Type
Lincoln County		Unclassifiable/Attainment.		
Livingston County		Unclassifiable/Attainment.		
Logan County		Unclassifiable/Attainment.		
Lyon County		Unclassifiable/Attainment.		
McCracken County		Unclassifiable/Attainment.		
McCreary County		Unclassifiable/Attainment.		
McLean County		Unclassifiable/Attainment.		
Madison County		Unclassifiable/Attainment.		
Magoffin County		Unclassifiable/Attainment.		
Marion County		Unclassifiable/Attainment.		
Marshall County		Unclassifiable/Attainment.		
Martin County		Unclassifiable/Attainment.		
Mason County		Unclassifiable/Attainment.		
Meade County		Unclassifiable/Attainment.		
Menifee County		Unclassifiable/Attainment.		
Mercer County		Unclassifiable/Attainment.		
Metcalfe County		Unclassifiable/Attainment.		
Monroe County		Unclassifiable/Attainment.		
Montgomery County		Unclassifiable/Attainment.		
Morgan County		Unclassifiable/Attainment.		
Muhlenberg County		Unclassifiable/Attainment.		
Nelson County		Unclassifiable/Attainment.		
Nicholas County		Unclassifiable/Attainment.		
Ohio County		Unclassifiable/Attainment.		
Oldham County		Unclassifiable/Attainment.		
Owen County		Unclassifiable/Attainment.		
Owsley County		Unclassifiable/Attainment.		
Pendleton County		Unclassifiable/Attainment.		
Perry County		Unclassifiable/Attainment.		
Pike County		Unclassifiable/Attainment.		
Powell County		Unclassifiable/Attainment.		
Pulaski County		Unclassifiable/Attainment.		
Robertson County		Unclassifiable/Attainment.		
Rockcastle County		Unclassifiable/Attainment.		
Rowan County		Unclassifiable/Attainment.		
Russell County		Unclassifiable/Attainment.		
Scott County		Unclassifiable/Attainment.		
Shelby County		Unclassifiable/Attainment.		
Simpson County		Unclassifiable/Attainment.		
Spencer County		Unclassifiable/Attainment.		
Taylor County		Unclassifiable/Attainment.		
Todd County		Unclassifiable/Attainment.		
Trigg County		Unclassifiable/Attainment.		
Trimble County		Unclassifiable/Attainment.		
Union County		Unclassifiable/Attainment.		
Warren County		Unclassifiable/Attainment.		
Washington County		Unclassifiable/Attainment.		
Wayne County		Unclassifiable/Attainment.		
Webster County		Unclassifiable/Attainment.		
Whitley County		Unclassifiable/Attainment.		
Wolfe County		Unclassifiable/Attainment.		
Woodford County		Unclassifiable/Attainment.		

[a] Includes Indian Country located in each county or area, except as otherwise specified.
[1] This date is 30 days after November 13, 2009, unless otherwise noted.

* * * * *

■ 20. Section 81.319 is amended as follows:

■ a. By removing the tables titled ''Louisiana—$PM_{2.5}$ (Annual NAAQS)'' and ''Louisiana—$PM_{2.5}$ [24-hour NAAQS]''.

■ b. By adding three tables titled ''Louisiana—1997 Annual $PM_{2.5}$ NAAQS (Primary and Secondary)'' and ''Louisiana—1997 24-hour $PM_{2.5}$ NAAQS (Primary and Secondary)'' and ''Louisiana—2006 24-hour $PM_{2.5}$ NAAQS (Primary and Secondary)'' before the table titled ''Louisiana—NO_2 (1971 Annual Standard)''.

The additions read as follows:

§ 81.319 Louisiana.

* * * * *

LOUISIANA—1997 ANNUAL $PM_{2.5}$ NAAQS

[Primary and secondary]

Designated area	Designation [a]		Classification	
	Date [1]	Type	Date	Type
AQCR 019 Monroe-El Dorado Interstate:				
Caldwell Parish		Unclassifiable/Attainment.		
Catahoula Parish		Unclassifiable/Attainment.		
Concordia Parish		Unclassifiable/Attainment.		
East Carroll Parish		Unclassifiable/Attainment.		
Franklin Parish		Unclassifiable/Attainment.		
La Salle Parish		Unclassifiable/Attainment.		
Madison Parish		Unclassifiable/Attainment.		
Morehouse Parish		Unclassifiable/Attainment.		
Ouachita Parish		Unclassifiable/Attainment.		
Richland Parish		Unclassifiable/Attainment.		
Tensas Parish		Unclassifiable/Attainment.		
Union Parish		Unclassifiable/Attainment.		
West Carroll Parish		Unclassifiable/Attainment.		
AQCR 022 Shreveport-Texarkana-Tyler Interstate:		Unclassifiable/Attainment.		
Bienville Parish		Unclassifiable/Attainment.		
Bossier Parish		Unclassifiable/Attainment.		
Caddo Parish		Unclassifiable/Attainment.		
Claiborne Parish		Unclassifiable/Attainment.		
De Soto Parish		Unclassifiable/Attainment.		
Jackson Parish		Unclassifiable/Attainment.		
Lincoln Parish		Unclassifiable/Attainment.		
Natchitoches Parish		Unclassifiable/Attainment.		
Red River Parish		Unclassifiable/Attainment.		
Sabine Parish		Unclassifiable/Attainment.		
Webster Parish		Unclassifiable/Attainment.		
Winn Parish		Unclassifiable/Attainment.		
AQCR 106 S. Louisiana-S.E. Texas Interstate:		Unclassifiable/Attainment.		
Acadia Parish		Unclassifiable/Attainment.		
Allen Parish		Unclassifiable/Attainment.		
Ascension Parish		Unclassifiable/Attainment.		
Assumption Parish		Unclassifiable/Attainment.		
Avoyelles Parish		Unclassifiable/Attainment.		
Beauregard Parish		Unclassifiable/Attainment.		
Calcasieu Parish		Unclassifiable/Attainment.		
Cameron Parish		Unclassifiable/Attainment.		
East Baton Rouge Parish		Unclassifiable/Attainment.		
East Feliciana Parish		Unclassifiable/Attainment.		
Evangeline Parish		Unclassifiable/Attainment.		
Grant Parish		Unclassifiable/Attainment.		
Iberia Parish		Unclassifiable/Attainment.		
Iberville Parish		Unclassifiable/Attainment.		
Jefferson Davis Parish		Unclassifiable/Attainment.		
Jefferson Parish		Unclassifiable/Attainment.		
Lafayette Parish		Unclassifiable/Attainment.		
Lafourche Parish		Unclassifiable/Attainment.		
Livingston Parish		Unclassifiable/Attainment.		
Orleans Parish		Unclassifiable/Attainment.		
Plaquemines Parish		Unclassifiable/Attainment.		
Pointe Coupee Parish		Unclassifiable/Attainment.		
Rapides Parish		Unclassifiable/Attainment.		
St. Bernard Parish		Unclassifiable/Attainment.		
St. Charles Parish		Unclassifiable/Attainment.		
St. Helena Parish		Unclassifiable/Attainment.		
St. James Parish		Unclassifiable/Attainment.		
St. John the Baptist Parish		Unclassifiable/Attainment.		
St. Landry Parish		Unclassifiable/Attainment.		
St. Martin Parish		Unclassifiable/Attainment.		
St. Tammany Parish		Unclassifiable/Attainment.		
Tangipahoa Parish		Unclassifiable/Attainment.		
Terrebonne Parish		Unclassifiable/Attainment.		
Vermilion Parish		Unclassifiable/Attainment.		
Vernon Parish		Unclassifiable/Attainment.		
Washington Parish		Unclassifiable/Attainment.		
West Baton Rouge Parish		Unclassifiable/Attainment.		
West Feliciana Parish		Unclassifiable/Attainment.		

[a] Includes Indian Country located in each county or area, except as otherwise specified.
[1] This date is 90 days after January 5, 2005, unless otherwise noted.

LOUISIANA—1997 24-HOUR $PM_{2.5}$ NAAQS

[Primary and secondary]

Designated area	Designation [a]		Classification	
	Date [1]	Type	Date	Type
AQCR 019 Monroe-El Dorado Interstate:				
Caldwell Parish		Unclassifiable/Attainment.		
Catahoula Parish		Unclassifiable/Attainment.		
Concordia Parish		Unclassifiable/Attainment.		
East Carroll Parish		Unclassifiable/Attainment.		
Franklin Parish		Unclassifiable/Attainment.		
La Salle Parish		Unclassifiable/Attainment.		
Madison Parish		Unclassifiable/Attainment.		
Morehouse Parish		Unclassifiable/Attainment.		
Ouachita Parish		Unclassifiable/Attainment.		
Richland Parish		Unclassifiable/Attainment.		
Tensas Parish		Unclassifiable/Attainment.		
Union Parish		Unclassifiable/Attainment.		
West Carroll Parish		Unclassifiable/Attainment.		
AQCR 022 Shreveport-Texarkana-Tyler Interstate:				
Bienville Parish		Unclassifiable/Attainment.		
Bossier Parish		Unclassifiable/Attainment.		
Caddo Parish		Unclassifiable/Attainment.		
Claiborne Parish		Unclassifiable/Attainment.		
De Soto Parish		Unclassifiable/Attainment.		
Jackson Parish		Unclassifiable/Attainment.		
Lincoln Parish		Unclassifiable/Attainment.		
Natchitoches Parish		Unclassifiable/Attainment.		
Red River Parish		Unclassifiable/Attainment.		
Sabine Parish		Unclassifiable/Attainment.		
Webster Parish		Unclassifiable/Attainment.		
Winn Parish		Unclassifiable/Attainment.		
AQCR 106 S. Louisiana-S.E. Texas Interstate:				
Acadia Parish		Unclassifiable/Attainment.		
Allen Parish		Unclassifiable/Attainment.		
Ascension Parish		Unclassifiable/Attainment.		
Assumption Parish		Unclassifiable/Attainment.		
Avoyelles Parish		Unclassifiable/Attainment.		
Beauregard Parish		Unclassifiable/Attainment.		
Calcasieu Parish		Unclassifiable/Attainment.		
Cameron Parish		Unclassifiable/Attainment.		
East Baton Rouge Parish		Unclassifiable/Attainment.		
East Feliciana Parish		Unclassifiable/Attainment.		
Evangeline Parish		Unclassifiable/Attainment.		
Grant Parish		Unclassifiable/Attainment.		
Iberia Parish		Unclassifiable/Attainment.		
Iberville Parish		Unclassifiable/Attainment.		
Jefferson Davis Parish		Unclassifiable/Attainment.		
Jefferson Parish		Unclassifiable/Attainment.		
Lafayette Parish		Unclassifiable/Attainment.		
Lafourche Parish		Unclassifiable/Attainment.		
Livingston Parish		Unclassifiable/Attainment.		
Orleans Parish		Unclassifiable/Attainment.		
Plaquemines Parish		Unclassifiable/Attainment.		
Pointe Coupee Parish		Unclassifiable/Attainment.		
Rapides Parish		Unclassifiable/Attainment.		
St. Bernard Parish		Unclassifiable/Attainment.		
St. Charles Parish		Unclassifiable/Attainment.		
St. Helena Parish		Unclassifiable/Attainment.		
St. James Parish		Unclassifiable/Attainment.		
St. John the Baptist Parish		Unclassifiable/Attainment.		
St. Landry Parish		Unclassifiable/Attainment.		
St. Martin Parish		Unclassifiable/Attainment.		
St. Tammany Parish		Unclassifiable/Attainment.		
Tangipahoa Parish		Unclassifiable/Attainment.		
Terrebonne Parish		Unclassifiable/Attainment.		
Vermilion Parish		Unclassifiable/Attainment.		
Vernon Parish		Unclassifiable/Attainment.		
Washington Parish		Unclassifiable/Attainment.		
West Baton Rouge Parish		Unclassifiable/Attainment.		
West Feliciana Parish		Unclassifiable/Attainment.		

[a] Includes Indian Country located in each county or area, except as otherwise specified.
[1] This date is 90 days after January 5, 2005, unless otherwise noted.

LOUISIANA—2006 24-HOUR $PM_{2.5}$ NAAQS

[Primary and secondary]

Designated area	Designation [a]		Classification	
	Date [1]	Type	Date	Type
AQCR 019 Monroe-El Dorado Interstate:				
Caldwell Parish		Unclassifiable/Attainment.		
Catahoula Parish		Unclassifiable/Attainment.		
Concordia Parish		Unclassifiable/Attainment.		
East Carroll Parish		Unclassifiable/Attainment.		
Franklin Parish		Unclassifiable/Attainment.		
La Salle Parish		Unclassifiable/Attainment.		
Madison Parish		Unclassifiable/Attainment.		
Morehouse Parish		Unclassifiable/Attainment.		
Ouachita Parish		Unclassifiable/Attainment.		
Richland Parish		Unclassifiable/Attainment.		
Tensas Parish		Unclassifiable/Attainment.		
Union Parish		Unclassifiable/Attainment.		
West Carroll Parish		Unclassifiable/Attainment.		
AQCR 022 Shreveport-Texarkana-Tyler Interstate:				
Bienville Parish		Unclassifiable/Attainment.		
Bossier Parish		Unclassifiable/Attainment.		
Caddo Parish		Unclassifiable/Attainment.		
Claiborne Parish		Unclassifiable/Attainment.		
De Soto Parish		Unclassifiable/Attainment.		
Jackson Parish		Unclassifiable/Attainment.		
Lincoln Parish		Unclassifiable/Attainment.		
Natchitoches Parish		Unclassifiable/Attainment.		
Red River Parish		Unclassifiable/Attainment.		
Sabine Parish		Unclassifiable/Attainment.		
Webster Parish		Unclassifiable/Attainment.		
Winn Parish		Unclassifiable/Attainment.		
AQCR 106 S. Louisiana-S.E. Texas Interstate:				
Acadia Parish		Unclassifiable/Attainment.		
Allen Parish		Unclassifiable/Attainment.		
Ascension Parish		Unclassifiable/Attainment.		
Assumption Parish		Unclassifiable/Attainment.		
Avoyelles Parish		Unclassifiable/Attainment.		
Beauregard Parish		Unclassifiable/Attainment.		
Calcasieu Parish		Unclassifiable/Attainment.		
Cameron Parish		Unclassifiable/Attainment.		
East Baton Rouge Parish		Unclassifiable/Attainment.		
East Feliciana Parish		Unclassifiable/Attainment.		
Evangeline Parish		Unclassifiable/Attainment.		
Grant Parish		Unclassifiable/Attainment.		
Iberia Parish		Unclassifiable/Attainment.		
Iberville Parish		Unclassifiable/Attainment.		
Jefferson Davis Parish		Unclassifiable/Attainment.		
Jefferson Parish		Unclassifiable/Attainment.		
Lafayette Parish		Unclassifiable/Attainment.		
Lafourche Parish		Unclassifiable/Attainment.		
Livingston Parish		Unclassifiable/Attainment.		
Orleans Parish		Unclassifiable/Attainment.		
Plaquemines Parish		Unclassifiable/Attainment.		
Pointe Coupee Parish		Unclassifiable/Attainment.		
Rapides Parish		Unclassifiable/Attainment.		
St. Bernard Parish		Unclassifiable/Attainment.		
St. Charles Parish		Unclassifiable/Attainment.		
St. Helena Parish		Unclassifiable/Attainment.		
St. James Parish		Unclassifiable/Attainment.		
St. John the Baptist Parish		Unclassifiable/Attainment.		
St. Landry Parish		Unclassifiable/Attainment.		
St. Martin Parish		Unclassifiable/Attainment.		
St. Tammany Parish		Unclassifiable/Attainment.		
Tangipahoa Parish		Unclassifiable/Attainment.		
Terrebonne Parish		Unclassifiable/Attainment.		
Vermilion Parish		Unclassifiable/Attainment.		
Vernon Parish		Unclassifiable/Attainment.		
Washington Parish		Unclassifiable/Attainment.		
West Baton Rouge Parish		Unclassifiable/Attainment.		
West Feliciana Parish		Unclassifiable/Attainment.		

[a] Includes Indian Country located in each county or area, except as otherwise specified.
[1] This date is 30 days after November 13, 2009, unless otherwise noted.

* * * * *

■ 21. Section 81.320 is amended as follows:

■ a. By removing the tables titled ''Maine—$PM_{2.5}$ (Annual NAAQS)'' and ''Maine—$PM_{2.5}$ [24-hour NAAQS]''.

■ b. By adding three tables titled ''Maine—1997 Annual $PM_{2.5}$ NAAQS (Primary and Secondary)'' and ''Maine—1997 24-hour $PM_{2.5}$ NAAQS (Primary and Secondary)'' and ''Maine—2006 24-hour $PM_{2.5}$ NAAQS (Primary and Secondary)'' before the table titled ''Maine—NO_2 (1971 Annual Standard)''.

The additions read as follows:

§ 81.320 Maine.

* * * * *

MAINE—1997 ANNUAL $PM_{2.5}$ NAAQS

[Primary and secondary]

Designated area	Designation [a]		Classification	
	Date [1]	Type	Date	Type
Statewide:				
Androscoggin County		Unclassifiable/Attainment.		
Aroostook County		Unclassifiable/Attainment.		
Cumberland County		Unclassifiable/Attainment.		
Franklin County		Unclassifiable/Attainment.		
Hancock County		Unclassifiable/Attainment.		
Kennebec County		Unclassifiable/Attainment.		
Knox County		Unclassifiable/Attainment.		
Lincoln County		Unclassifiable/Attainment.		
Oxford County		Unclassifiable/Attainment.		
Penobscot County		Unclassifiable/Attainment.		
Piscataquis County		Unclassifiable/Attainment.		
Sagadahoc County		Unclassifiable/Attainment.		
Somerset County		Unclassifiable/Attainment.		
Waldo County		Unclassifiable/Attainment.		
Washington County		Unclassifiable/Attainment.		
York County		Unclassifiable/Attainment.		

[a] Includes Indian Country located in each county or area, except as otherwise specified.
[1] This date is 90 days after January 5, 2005, unless otherwise noted.

MAINE—1997 24-HOUR $PM_{2.5}$ NAAQS

[Primary and secondary]

Designated area	Designation [a]		Classification	
	Date [1]	Type	Date	Type
Statewide:				
Androscoggin County		Unclassifiable/Attainment.		
Aroostook County		Unclassifiable/Attainment.		
Cumberland County		Unclassifiable/Attainment.		
Franklin County		Unclassifiable/Attainment.		
Hancock County		Unclassifiable/Attainment.		
Kennebec County		Unclassifiable/Attainment.		
Knox County		Unclassifiable/Attainment.		
Lincoln County		Unclassifiable/Attainment.		
Oxford County		Unclassifiable/Attainment.		
Penobscot County		Unclassifiable/Attainment.		
Piscataquis County		Unclassifiable/Attainment.		
Sagadahoc County		Unclassifiable/Attainment.		
Somerset County		Unclassifiable/Attainment.		
Waldo County		Unclassifiable/Attainment.		
Washington County		Unclassifiable/Attainment.		
York County		Unclassifiable/Attainment.		

[a] Includes Indian Country located in each county or area, except as otherwise specified.
[1] This date is 90 days after January 5, 2005, unless otherwise noted.

MAINE—2006 24-HOUR $PM_{2.5}$ NAAQS

[Primary and secondary]

Designated area	Designation [a]		Classification	
	Date [1]	Type	Date	Type
Statewide:				
Androscoggin County		Unclassifiable/Attainment.		
Aroostook County		Unclassifiable/Attainment.		
Cumberland County		Unclassifiable/Attainment.		
Franklin County		Unclassifiable/Attainment.		

MAINE—2006 24-HOUR $PM_{2.5}$ NAAQS—Continued

[Primary and secondary]

Designated area	Designation [a]		Classification	
	Date [1]	Type	Date	Type
Hancock County		Unclassifiable/Attainment.		
Kennebec County		Unclassifiable/Attainment.		
Knox County		Unclassifiable/Attainment.		
Lincoln County		Unclassifiable/Attainment.		
Oxford County		Unclassifiable/Attainment.		
Penobscot County		Unclassifiable/Attainment.		
Piscataquis County		Unclassifiable/Attainment.		
Sagadahoc County		Unclassifiable/Attainment.		
Somerset County		Unclassifiable/Attainment.		
Waldo County		Unclassifiable/Attainment.		
Washington County		Unclassifiable/Attainment.		
York County		Unclassifiable/Attainment.		

[a] Includes Indian Country located in each county or area, except as otherwise specified.
[1] This date is 30 days after November 13, 2009, unless otherwise noted.

* * * * *

■ 22. Section 81.321 is amended as follows:

■ a. By removing the tables titled ''Maryland—$PM_{2.5}$ (Annual NAAQS)'' and ''Maryland—$PM_{2.5}$ [24-hour NAAQS]''.

■ b. By adding three tables titled ''Maryland—1997 Annual $PM_{2.5}$ NAAQS (Primary and Secondary)'' and ''Maryland—1997 24-hour $PM_{2.5}$ NAAQS (Primary and Secondary)'' and ''Maryland—2006 24-hour $PM_{2.5}$ NAAQS (Primary and Secondary)'' before the table titled ''Maryland—NO_2 (1971 Annual Standard)''.

The additions read as follows:

§ 81.321 Maryland.

* * * * *

MARYLAND—1997 ANNUAL $PM_{2.5}$ NAAQS

[Primary and secondary]

Designated area	Designation [a]		Classification	
	Date [1]	Type	Date [2]	Type
Baltimore, MD:				
Anne Arundel County		Nonattainment		Moderate.
Baltimore County		Nonattainment		Moderate.
Carroll County		Nonattainment		Moderate.
Harford County		Nonattainment		Moderate.
Howard County		Nonattainment		Moderate.
City of Baltimore		Nonattainment		Moderate.
Martinsburg, WV-Hagerstown, MD:				
Washington County		Nonattainment		Moderate.
Washington, DC–MD–VA:				
Charles County		Nonattainment		Moderate.
Frederick County		Nonattainment		Moderate.
Montgomery County		Nonattainment		Moderate.
Prince George's County		Nonattainment		Moderate.
AQCR 113 Cumberland-Keyser Interstate:				
Allegany County		Unclassifiable/Attainment.		
Garrett County		Unclassifiable/Attainment.		
AQCR 114 Eastern Shore Interstate (remainder of):				
Caroline County		Unclassifiable/Attainment.		
Cecil County		Unclassifiable/Attainment.		
Dorchester County		Unclassifiable/Attainment.		
Kent County		Unclassifiable/Attainment.		
Queen Anne's County		Unclassifiable/Attainment.		
Somerset County		Unclassifiable/Attainment.		
Talbot County		Unclassifiable/Attainment.		
Wicomico County		Unclassifiable/Attainment.		
Worcester County		Unclassifiable/Attainment.		
AQCR 116 Southern Maryland Intrastate (remainder of):				
Calvert County		Unclassifiable/Attainment.		
St. Mary's County		Unclassifiable/Attainment.		

[a] Includes Indian Country located in each county or area, except as otherwise specified.
[1] This date is 90 days after January 5, 2005, unless otherwise noted.
[2] This date is July 2, 2014, unless otherwise noted.

MARYLAND—1997 24-HOUR $PM_{2.5}$ NAAQS

[Primary and secondary]

Designated area	Designation [a]		Classification	
	Date [1]	Type	Date	Type
AQCR 047 National Capital Interstate (DC–MD–VA) (part):				
Montgomery County		Unclassifiable/Attainment.		
Prince George's County		Unclassifiable/Attainment.		
Metropolitan Baltimore Intrastate AQCR:				
Anne Arundel County		Unclassifiable/Attainment.		
Baltimore County		Unclassifiable/Attainment.		
City of Baltimore		Unclassifiable/Attainment.		
Carroll County		Unclassifiable/Attainment.		
Harford County		Unclassifiable/Attainment.		
Howard County		Unclassifiable/Attainment.		
AQCR 112 Central Maryland Intrastate:				
Frederick County		Unclassifiable/Attainment.		
AQCR 113 Cumberland-Keyser Interstate:				
Allegany County		Unclassifiable/Attainment.		
Garrett County		Unclassifiable/Attainment.		
Washington County		Unclassifiable/Attainment.		
AQCR 114 Eastern Shore Intrastate:				
Caroline County		Unclassifiable/Attainment.		
Cecil County		Unclassifiable/Attainment.		
Dorchester County		Unclassifiable/Attainment.		
Kent County		Unclassifiable/Attainment.		
Queen Anne's County		Unclassifiable/Attainment.		
Somerset County		Unclassifiable/Attainment.		
Talbot County		Unclassifiable/Attainment.		
Wicomico County		Unclassifiable/Attainment.		
Worcester County		Unclassifiable/Attainment.		
AQCR 116 Southern Maryland Intrastate:				
Calvert County		Unclassifiable/Attainment.		
Charles County		Unclassifiable/Attainment.		
St. Mary's County		Unclassifiable/Attainment.		

[a] Includes Indian Country located in each county or area, except as otherwise specified.
[1] This date is 90 days after January 5, 2005, unless otherwise noted.

MARYLAND—2006 24-HOUR $PM_{2.5}$ NAAQS

[Primary and secondary]

Designated area	Designation [a]		Classification	
	Date [1]	Type	Date	Type
AQCR 047 National Capital Interstate (DC–MD–VA) (part):				
Montgomery County		Unclassifiable/Attainment.		
Prince George's County		Unclassifiable/Attainment.		
Metropolitan Baltimore Intrastate AQCR:				
Anne Arundel County		Unclassifiable/Attainment.		
Baltimore County		Unclassifiable/Attainment.		
City of Baltimore		Unclassifiable/Attainment.		
Carroll County		Unclassifiable/Attainment.		
Harford County		Unclassifiable/Attainment.		
Howard County		Unclassifiable/Attainment.		
AQCR 112 Central Maryland Intrastate:				
Frederick County		Unclassifiable/Attainment.		
AQCR 113 Cumberland-Keyser Interstate:				
Allegany County		Unclassifiable/Attainment.		
Garrett County		Unclassifiable/Attainment.		
Washington County		Unclassifiable/Attainment.		
AQCR 114 Eastern Shore Intrastate:				
Caroline County		Unclassifiable/Attainment.		
Cecil County		Unclassifiable/Attainment.		
Dorchester County		Unclassifiable/Attainment.		
Kent County		Unclassifiable/Attainment.		
Queen Anne's County		Unclassifiable/Attainment.		
Somerset County		Unclassifiable/Attainment.		
Talbot County		Unclassifiable/Attainment.		
Wicomico County		Unclassifiable/Attainment.		
Worcester County		Unclassifiable/Attainment.		
AQCR 116 Southern Maryland Intrastate:				
Calvert County		Unclassifiable/Attainment.		

MARYLAND—2006 24-HOUR $PM_{2.5}$ NAAQS—Continued

[Primary and secondary]

Designated area	Designation [a]		Classification	
	Date [1]	Type	Date	Type
Charles County		Unclassifiable/Attainment.		
St. Mary's County		Unclassifiable/Attainment.		

[a] Includes Indian Country located in each county or area, except as otherwise specified.
[1] This date is 30 days after November 13, 2009, unless otherwise noted.

* * * * *

■ 23. Section 81.322 is amended as follows:

■ a. By removing the tables titled ''Massachusetts—$PM_{2.5}$ (Annual NAAQS)'' and ''Massachusetts—$PM_{2.5}$ [24-hour NAAQS]''.

■ b. By adding three tables titled ''Massachusetts—1997 Annual $PM_{2.5}$ NAAQS (Primary and Secondary)'' and ''Massachusetts—1997 24-hour $PM_{2.5}$ NAAQS (Primary and Secondary)'' and ''Massachusetts—2006 24-hour $PM_{2.5}$ NAAQS (Primary and Secondary)'' before the table titled ''Massachusetts—NO_2 (1971 Annual Standard)''.

The additions read as follows:

§ 81.322 Massachusetts.

* * * * *

MASSACHUSETTS—1997 ANNUAL $PM_{2.5}$ NAAQS

[Primary and secondary]

Designated area	Designation [a]		Classification	
	Date [1]	Type	Date	Type
Statewide:				
Barnstable County		Unclassifiable/Attainment.		
Berkshire County		Unclassifiable/Attainment.		
Bristol County		Unclassifiable/Attainment.		
Dukes County		Unclassifiable/Attainment.		
Essex County		Unclassifiable/Attainment.		
Franklin County		Unclassifiable/Attainment.		
Hampden County		Unclassifiable/Attainment.		
Hampshire County		Unclassifiable/Attainment.		
Middlesex County		Unclassifiable/Attainment.		
Nantucket County		Unclassifiable/Attainment.		
Norfolk County		Unclassifiable/Attainment.		
Plymouth County		Unclassifiable/Attainment.		
Suffolk County		Unclassifiable/Attainment.		
Worcester County		Unclassifiable/Attainment.		

[a] Includes Indian Country located in each county or area, except as otherwise specified.
[1] This date is 90 days after January 5, 2005, unless otherwise noted.

MASSACHUSETTS—1997 24-HOUR $PM_{2.5}$ NAAQS

[Primary and secondary]

Designated area	Designation [a]		Classification	
	Date [1]	Type	Date	Type
Statewide:				
Barnstable County		Unclassifiable/Attainment.		
Berkshire County		Unclassifiable/Attainment.		
Bristol County		Unclassifiable/Attainment.		
Dukes County		Unclassifiable/Attainment.		
Essex County		Unclassifiable/Attainment.		
Franklin County		Unclassifiable/Attainment.		
Hampden County		Unclassifiable/Attainment.		
Hampshire County		Unclassifiable/Attainment.		
Middlesex County		Unclassifiable/Attainment.		
Nantucket County		Unclassifiable/Attainment.		
Norfolk County		Unclassifiable/Attainment.		
Plymouth County		Unclassifiable/Attainment.		
Suffolk County		Unclassifiable/Attainment.		
Worcester County		Unclassifiable/Attainment.		

[a] Includes Indian Country located in each county or area, except as otherwise specified.
[1] This date is 90 days after January 5, 2005, unless otherwise noted.

MASSACHUSETTS—2006 24-HOUR $PM_{2.5}$ NAAQS

[Primary and secondary]

Designated area	Designation [a]		Classification	
	Date [1]	Type	Date	Type
Statewide:				
Barnstable County		Unclassifiable/Attainment.		
Berkshire County		Unclassifiable/Attainment.		
Bristol County		Unclassifiable/Attainment.		
Dukes County		Unclassifiable/Attainment.		
Essex County		Unclassifiable/Attainment.		
Franklin County		Unclassifiable/Attainment.		
Hampden County		Unclassifiable/Attainment.		
Hampshire County		Unclassifiable/Attainment.		
Middlesex County		Unclassifiable/Attainment.		
Nantucket County		Unclassifiable/Attainment.		
Norfolk County		Unclassifiable/Attainment.		
Plymouth County		Unclassifiable/Attainment.		
Suffolk County		Unclassifiable/Attainment.		
Worcester County		Unclassifiable/Attainment.		

[a] Includes Indian Country located in each county or area, except as otherwise specified.
[1] This date is 30 days after November 13, 2009, unless otherwise noted.

* * * * *

■ 24. Section 81.323 is amended as follows:

■ a. By removing the tables titled ''Michigan—$PM_{2.5}$ (Annual NAAQS)'' and ''Michigan—$PM_{2.5}$ [24-hour NAAQS]''.

■ b. By adding three tables titled ''Michigan—1997 Annual $PM_{2.5}$ NAAQS (Primary and Secondary)'' and ''Michigan—1997 24-hour $PM_{2.5}$ NAAQS (Primary and Secondary)'' and ''Michigan—2006 24-hour $PM_{2.5}$ NAAQS (Primary and Secondary)'' before the table titled ''Michigan—NO_2 (1971 Annual Standard)''.

The additions read as follows:

§ 81.323 Michigan.

* * * * *

MICHIGAN—1997 ANNUAL $PM_{2.5}$ NAAQS

[Primary and secondary]

Designated area	Designation [a]		Classification	
	Date [1]	Type	Date	Type
Detroit-Ann Arbor, MI:	8/29/13	Attainment..		
Livingston County				
Macomb County				
Monroe County				
Oakland County				
St. Clair County				
Washtenaw County				
Wayne County				
Rest of State:				
Alcona County		Unclassifiable/Attainment.		
Alger County		Unclassifiable/Attainment.		
Allegan County		Unclassifiable/Attainment.		
Alpena County		Unclassifiable/Attainment.		
Antrim County		Unclassifiable/Attainment.		
Arenac County		Unclassifiable/Attainment.		
Baraga County		Unclassifiable/Attainment.		
Barry County		Unclassifiable/Attainment.		
Bay County		Unclassifiable/Attainment.		
Benzie County		Unclassifiable/Attainment.		
Berrien County		Unclassifiable/Attainment.		
Branch County		Unclassifiable/Attainment.		
Calhoun County		Unclassifiable/Attainment.		
Cass County		Unclassifiable/Attainment.		
Charlevoix County		Unclassifiable/Attainment.		
Cheboygan County		Unclassifiable/Attainment.		
Chippewa County		Unclassifiable/Attainment.		
Clare County		Unclassifiable/Attainment.		
Clinton County		Unclassifiable/Attainment.		
Crawford County		Unclassifiable/Attainment.		
Delta County		Unclassifiable/Attainment.		
Dickinson County		Unclassifiable/Attainment.		
Eaton County		Unclassifiable/Attainment.		
Emmet County		Unclassifiable/Attainment.		

MICHIGAN—1997 ANNUAL $PM_{2.5}$ NAAQS—Continued

[Primary and secondary]

Designated area	Designation [a]		Classification	
	Date [1]	Type	Date	Type
Genesee County		Unclassifiable/Attainment.		
Gladwin County		Unclassifiable/Attainment.		
Gogebic County		Unclassifiable/Attainment.		
Grand Traverse County		Unclassifiable/Attainment.		
Gratiot County		Unclassifiable/Attainment.		
Hillsdale County		Unclassifiable/Attainment.		
Houghton County		Unclassifiable/Attainment.		
Huron County		Unclassifiable/Attainment.		
Ingham County		Unclassifiable/Attainment.		
Ionia County		Unclassifiable/Attainment.		
Iosco County		Unclassifiable/Attainment.		
Iron County		Unclassifiable/Attainment.		
Isabella County		Unclassifiable/Attainment.		
Jackson County		Unclassifiable/Attainment.		
Kalamazoo County		Unclassifiable/Attainment.		
Kalkaska County		Unclassifiable/Attainment.		
Kent County		Unclassifiable/Attainment.		
Keweenaw County		Unclassifiable/Attainment.		
Lake County		Unclassifiable/Attainment.		
Lapeer County		Unclassifiable/Attainment.		
Leelanau County		Unclassifiable/Attainment.		
Lenawee County		Unclassifiable/Attainment.		
Luce County		Unclassifiable/Attainment.		
Mackinac County		Unclassifiable/Attainment.		
Manistee County		Unclassifiable/Attainment.		
Marquette County		Unclassifiable/Attainment.		
Mason County		Unclassifiable/Attainment.		
Mecosta County		Unclassifiable/Attainment.		
Menominee County		Unclassifiable/Attainment.		
Midland County		Unclassifiable/Attainment.		
Missaukee County		Unclassifiable/Attainment.		
Montcalm County		Unclassifiable/Attainment.		
Montmorency County		Unclassifiable/Attainment.		
Muskegon County		Unclassifiable/Attainment.		
Newaygo County		Unclassifiable/Attainment.		
Oceana County		Unclassifiable/Attainment.		
Ogemaw County		Unclassifiable/Attainment.		
Ontonagon County		Unclassifiable/Attainment.		
Osceola County		Unclassifiable/Attainment.		
Oscoda County		Unclassifiable/Attainment.		
Otsego County		Unclassifiable/Attainment.		
Ottawa County		Unclassifiable/Attainment.		
Presque Isle County		Unclassifiable/Attainment.		
Roscommon County		Unclassifiable/Attainment.		
Saginaw County		Unclassifiable/Attainment.		
St. Joseph County		Unclassifiable/Attainment.		
Sanilac County		Unclassifiable/Attainment.		
Schoolcraft County		Unclassifiable/Attainment.		
Shiawassee County		Unclassifiable/Attainment.		
Tuscola County		Unclassifiable/Attainment.		
Van Buren County		Unclassifiable/Attainment.		
Wexford County		Unclassifiable/Attainment.		

[a] Includes Indian Country located in each county or area, except as otherwise specified.
[1] This date is 90 days after January 5, 2005, unless otherwise noted.

MICHIGAN—1997 24-HOUR $PM_{2.5}$ NAAQS

[Primary and secondary]

Designated area	Designation [a]		Classification	
	Date [1]	Type	Date	Type
Detroit-Ann Arbor, MI:				
Livingston County		Unclassifiable/Attainment.		
Macomb County		Unclassifiable/Attainment.		
Monroe County		Unclassifiable/Attainment.		
Oakland County		Unclassifiable/Attainment.		
St. Clair County		Unclassifiable/Attainment.		

MICHIGAN—1997 24-HOUR $PM_{2.5}$ NAAQS—Continued

[Primary and secondary]

Designated area	Designation [a]		Classification	
	Date [1]	Type	Date	Type
Washtenaw County		Unclassifiable/Attainment.		
Wayne County		Unclassifiable/Attainment.		
Rest of State:				
Alcona County		Unclassifiable/Attainment.		
Alger County		Unclassifiable/Attainment.		
Allegan County		Unclassifiable/Attainment.		
Alpena County		Unclassifiable/Attainment.		
Antrim County		Unclassifiable/Attainment.		
Arenac County		Unclassifiable/Attainment.		
Baraga County		Unclassifiable/Attainment.		
Barry County		Unclassifiable/Attainment.		
Bay County		Unclassifiable/Attainment.		
Benzie County		Unclassifiable/Attainment.		
Berrien County		Unclassifiable/Attainment.		
Branch County		Unclassifiable/Attainment.		
Calhoun County		Unclassifiable/Attainment.		
Cass County		Unclassifiable/Attainment.		
Charlevoix County		Unclassifiable/Attainment.		
Cheboygan County		Unclassifiable/Attainment.		
Chippewa County		Unclassifiable/Attainment.		
Clare County		Unclassifiable/Attainment.		
Clinton County		Unclassifiable/Attainment.		
Crawford County		Unclassifiable/Attainment.		
Delta County		Unclassifiable/Attainment.		
Dickinson County		Unclassifiable/Attainment.		
Eaton County		Unclassifiable/Attainment.		
Emmet County		Unclassifiable/Attainment.		
Genesee County		Unclassifiable/Attainment.		
Gladwin County		Unclassifiable/Attainment.		
Gogebic County		Unclassifiable/Attainment.		
Grand Traverse County		Unclassifiable/Attainment.		
Gratiot County		Unclassifiable/Attainment.		
Hillsdale County		Unclassifiable/Attainment.		
Houghton County		Unclassifiable/Attainment.		
Huron County		Unclassifiable/Attainment.		
Ingham County		Unclassifiable/Attainment.		
Ionia County		Unclassifiable/Attainment.		
Iosco County		Unclassifiable/Attainment.		
Iron County		Unclassifiable/Attainment.		
Isabella County		Unclassifiable/Attainment.		
Jackson County		Unclassifiable/Attainment.		
Kalamazoo County		Unclassifiable/Attainment.		
Kalkaska County		Unclassifiable/Attainment.		
Kent County		Unclassifiable/Attainment.		
Keweenaw County		Unclassifiable/Attainment.		
Lake County		Unclassifiable/Attainment.		
Lapeer County		Unclassifiable/Attainment.		
Leelanau County		Unclassifiable/Attainment.		
Lenawee County		Unclassifiable/Attainment.		
Luce County		Unclassifiable/Attainment.		
Mackinac County		Unclassifiable/Attainment.		
Manistee County		Unclassifiable/Attainment.		
Marquette County		Unclassifiable/Attainment.		
Mason County		Unclassifiable/Attainment.		
Mecosta County		Unclassifiable/Attainment.		
Menominee County		Unclassifiable/Attainment.		
Midland County		Unclassifiable/Attainment.		
Missaukee County		Unclassifiable/Attainment.		
Montcalm County		Unclassifiable/Attainment.		
Montmorency County		Unclassifiable/Attainment.		
Muskegon County		Unclassifiable/Attainment.		
Newaygo County		Unclassifiable/Attainment.		
Oceana County		Unclassifiable/Attainment.		
Ogemaw County		Unclassifiable/Attainment.		
Ontonagon County		Unclassifiable/Attainment.		
Osceola County		Unclassifiable/Attainment.		
Oscoda County		Unclassifiable/Attainment.		
Otsego County		Unclassifiable/Attainment.		
Ottawa County		Unclassifiable/Attainment.		

MICHIGAN—1997 24-HOUR $PM_{2.5}$ NAAQS—Continued

[Primary and secondary]

Designated area	Designation [a]		Classification	
	Date [1]	Type	Date	Type
Presque Isle County		Unclassifiable/Attainment.		
Roscommon County		Unclassifiable/Attainment.		
Saginaw County		Unclassifiable/Attainment.		
St. Joseph County		Unclassifiable/Attainment.		
Sanilac County		Unclassifiable/Attainment.		
Schoolcraft County		Unclassifiable/Attainment.		
Shiawassee County		Unclassifiable/Attainment.		
Tuscola County		Unclassifiable/Attainment.		
Van Buren County		Unclassifiable/Attainment.		
Wexford County		Unclassifiable/Attainment.		

[a] Includes Indian Country located in each county or area, except as otherwise specified.
[1] This date is 90 days after January 5, 2005, unless otherwise noted.

MICHIGAN—2006 24-HOUR $PM_{2.5}$ NAAQS

[Primary and secondary]

Designated area	Designation [a]		Classification	
	Date [1]	Type	Date	Type
Detroit-Ann Arbor, MI:	8/29/13	Attainment.		
Livingston County				
Macomb County				
Monroe County				
Oakland County				
St. Clair County				
Washtenaw County				
Wayne County				
Rest of State:				
Alcona County		Unclassifiable/Attainment.		
Alger County		Unclassifiable/Attainment.		
Allegan County		Unclassifiable/Attainment.		
Alpena County		Unclassifiable/Attainment.		
Antrim County		Unclassifiable/Attainment.		
Arenac County		Unclassifiable/Attainment.		
Baraga County		Unclassifiable/Attainment.		
Barry County		Unclassifiable/Attainment.		
Bay County		Unclassifiable/Attainment.		
Benzie County		Unclassifiable/Attainment.		
Berrien County		Unclassifiable/Attainment.		
Branch County		Unclassifiable/Attainment.		
Calhoun County		Unclassifiable/Attainment.		
Cass County		Unclassifiable/Attainment.		
Charlevoix County		Unclassifiable/Attainment.		
Cheboygan County		Unclassifiable/Attainment.		
Chippewa County		Unclassifiable/Attainment.		
Clare County		Unclassifiable/Attainment.		
Clinton County		Unclassifiable/Attainment.		
Crawford County		Unclassifiable/Attainment.		
Delta County		Unclassifiable/Attainment.		
Dickinson County		Unclassifiable/Attainment.		
Eaton County		Unclassifiable/Attainment.		
Emmet County		Unclassifiable/Attainment.		
Genesee County		Unclassifiable/Attainment.		
Gladwin County		Unclassifiable/Attainment.		
Gogebic County		Unclassifiable/Attainment.		
Grand Traverse County		Unclassifiable/Attainment.		
Gratiot County		Unclassifiable/Attainment.		
Hillsdale County		Unclassifiable/Attainment.		
Houghton County		Unclassifiable/Attainment.		
Huron County		Unclassifiable/Attainment.		
Ingham County		Unclassifiable/Attainment.		
Ionia County		Unclassifiable/Attainment.		
Iosco County		Unclassifiable/Attainment.		
Iron County		Unclassifiable/Attainment.		
Isabella County		Unclassifiable/Attainment.		
Jackson County		Unclassifiable/Attainment.		
Kalamazoo County		Unclassifiable/Attainment.		

MICHIGAN—2006 24-HOUR $PM_{2.5}$ NAAQS—Continued

[Primary and secondary]

Designated area	Designation [a]		Classification	
	Date [1]	Type	Date	Type
Kalkaska County		Unclassifiable/Attainment.		
Kent County		Unclassifiable/Attainment.		
Keweenaw County		Unclassifiable/Attainment.		
Lake County		Unclassifiable/Attainment.		
Lapeer County		Unclassifiable/Attainment.		
Leelanau County		Unclassifiable/Attainment.		
Lenawee County		Unclassifiable/Attainment.		
Luce County		Unclassifiable/Attainment.		
Mackinac County		Unclassifiable/Attainment.		
Manistee County		Unclassifiable/Attainment.		
Marquette County		Unclassifiable/Attainment.		
Mason County		Unclassifiable/Attainment.		
Mecosta County		Unclassifiable/Attainment.		
Menominee County		Unclassifiable/Attainment.		
Midland County		Unclassifiable/Attainment.		
Missaukee County		Unclassifiable/Attainment.		
Montcalm County		Unclassifiable/Attainment.		
Montmorency County		Unclassifiable/Attainment.		
Muskegon County		Unclassifiable/Attainment.		
Newaygo County		Unclassifiable/Attainment.		
Oceana County		Unclassifiable/Attainment.		
Ogemaw County		Unclassifiable/Attainment.		
Ontonagon County		Unclassifiable/Attainment.		
Osceola County		Unclassifiable/Attainment.		
Oscoda County		Unclassifiable/Attainment.		
Otsego County		Unclassifiable/Attainment.		
Ottawa County		Unclassifiable/Attainment.		
Presque Isle County		Unclassifiable/Attainment.		
Roscommon County		Unclassifiable/Attainment.		
Saginaw County		Unclassifiable/Attainment.		
St. Joseph County		Unclassifiable/Attainment.		
Sanilac County		Unclassifiable/Attainment.		
Schoolcraft County		Unclassifiable/Attainment.		
Shiawassee County		Unclassifiable/Attainment.		
Tuscola County		Unclassifiable/Attainment.		
Van Buren County		Unclassifiable/Attainment.		
Wexford County		Unclassifiable/Attainment.		

[a] Includes Indian Country located in each county or area, except as otherwise specified.
[1] This date is 30 days after November 13, 2009, unless otherwise noted.

* * * * *

■ 25. Section 81.324 is amended as follows:

■ a. By removing the tables titled ''Minnesota—$PM_{2.5}$ (Annual NAAQS)'' and ''Minnesota—$PM_{2.5}$ [24-hour NAAQS]''.

■ b. By adding three tables titled ''Minnesota—1997 Annual $PM_{2.5}$ NAAQS (Primary and Secondary)'' and ''Minnesota—1997 24-hour $PM_{2.5}$ NAAQS (Primary and Secondary)'' and ''Minnesota—2006 24-hour $PM_{2.5}$ NAAQS (Primary and Secondary)'' before the table titled ''Minnesota—NO_2 (1971 Annual Standard)''.

The additions read as follows:

§ 81.324 Minnesota.

* * * * *

MINNESOTA—1997 ANNUAL $PM_{2.5}$ NAAQS

[Primary and secondary]

Designated area	Designation [a]		Classification	
	Date [1]	Type	Date	Type
Statewide:				
Aitkin County		Unclassifiable/Attainment.		
Anoka County		Unclassifiable/Attainment.		
Becker County		Unclassifiable/Attainment.		
Beltrami County		Unclassifiable/Attainment.		
Benton County		Unclassifiable/Attainment.		
Big Stone County		Unclassifiable/Attainment.		
Blue Earth County		Unclassifiable/Attainment.		
Brown County		Unclassifiable/Attainment.		
Carlton County		Unclassifiable/Attainment.		
Carver County		Unclassifiable/Attainment.		

MINNESOTA—1997 ANNUAL $PM_{2.5}$ NAAQS—Continued

[Primary and secondary]

Designated area	Designation [a]		Classification	
	Date [1]	Type	Date	Type
Cass County		Unclassifiable/Attainment.		
Chippewa County		Unclassifiable/Attainment.		
Chisago County		Unclassifiable/Attainment.		
Clay County		Unclassifiable/Attainment.		
Clearwater County		Unclassifiable/Attainment.		
Cook County		Unclassifiable/Attainment.		
Cottonwood County		Unclassifiable/Attainment.		
Crow Wing County		Unclassifiable/Attainment.		
Dakota County		Unclassifiable/Attainment.		
Dodge County		Unclassifiable/Attainment.		
Douglas County		Unclassifiable/Attainment.		
Faribault County		Unclassifiable/Attainment.		
Fillmore County		Unclassifiable/Attainment.		
Freeborn County		Unclassifiable/Attainment.		
Goodhue County		Unclassifiable/Attainment.		
Grant County		Unclassifiable/Attainment.		
Hennepin County		Unclassifiable/Attainment.		
Houston County		Unclassifiable/Attainment.		
Hubbard County		Unclassifiable/Attainment.		
Isanti County		Unclassifiable/Attainment.		
Itasca County		Unclassifiable/Attainment.		
Jackson County		Unclassifiable/Attainment.		
Kanabec County		Unclassifiable/Attainment.		
Kandiyohi County		Unclassifiable/Attainment.		
Kittson County		Unclassifiable/Attainment.		
Koochiching County		Unclassifiable/Attainment.		
Lac qui Parle County		Unclassifiable/Attainment.		
Lake County		Unclassifiable/Attainment.		
Lake of the Woods County		Unclassifiable/Attainment.		
Le Sueur County		Unclassifiable/Attainment.		
Lincoln County		Unclassifiable/Attainment.		
Lyon County		Unclassifiable/Attainment.		
McLeod County		Unclassifiable/Attainment.		
Mahnomen County		Unclassifiable/Attainment.		
Marshall County		Unclassifiable/Attainment.		
Martin County		Unclassifiable/Attainment.		
Meeker County		Unclassifiable/Attainment.		
Mille Lacs County		Unclassifiable/Attainment.		
Morrison County		Unclassifiable/Attainment.		
Mower County		Unclassifiable/Attainment.		
Murray County		Unclassifiable/Attainment.		
Nicollet County		Unclassifiable/Attainment.		
Nobles County		Unclassifiable/Attainment.		
Norman County		Unclassifiable/Attainment.		
Olmsted County		Unclassifiable/Attainment.		
Otter Tail County		Unclassifiable/Attainment.		
Pennington County		Unclassifiable/Attainment.		
Pine County		Unclassifiable/Attainment.		
Pipestone County		Unclassifiable/Attainment.		
Polk County		Unclassifiable/Attainment.		
Pope County		Unclassifiable/Attainment.		
Ramsey County		Unclassifiable/Attainment.		
Red Lake County		Unclassifiable/Attainment.		
Redwood County		Unclassifiable/Attainment.		
Renville County		Unclassifiable/Attainment.		
Rice County		Unclassifiable/Attainment.		
Rock County		Unclassifiable/Attainment.		
Roseau County		Unclassifiable/Attainment.		
St. Louis County		Unclassifiable/Attainment.		
Scott County		Unclassifiable/Attainment.		
Sherburne County		Unclassifiable/Attainment.		
Sibley County		Unclassifiable/Attainment.		
Stearns County		Unclassifiable/Attainment.		
Steele County		Unclassifiable/Attainment.		
Stevens County		Unclassifiable/Attainment.		
Swift County		Unclassifiable/Attainment.		
Todd County		Unclassifiable/Attainment.		
Traverse County		Unclassifiable/Attainment.		
Wabasha County		Unclassifiable/Attainment.		

MINNESOTA—1997 ANNUAL $PM_{2.5}$ NAAQS—Continued

[Primary and secondary]

Designated area	Designation [a]		Classification	
	Date [1]	Type	Date	Type
Wadena County		Unclassifiable/Attainment.		
Waseca County		Unclassifiable/Attainment.		
Washington County		Unclassifiable/Attainment.		
Watonwan County		Unclassifiable/Attainment.		
Wilkin County		Unclassifiable/Attainment.		
Winona County		Unclassifiable/Attainment.		
Wright County		Unclassifiable/Attainment.		
Yellow Medicine County		Unclassifiable/Attainment.		

[a] Includes Indian Country located in each county or area, except as otherwise specified.
[1] This date is 90 days after January 5, 2005, unless otherwise noted.

MINNESOTA—1997 24-HOUR $PM_{2.5}$ NAAQS

[Primary and secondary]

Designated area	Designation [a]		Classification	
	Date [1]	Type	Date	Type
Statewide:				
Aitkin County		Unclassifiable/Attainment.		
Anoka County		Unclassifiable/Attainment.		
Becker County		Unclassifiable/Attainment.		
Beltrami County		Unclassifiable/Attainment.		
Benton County		Unclassifiable/Attainment.		
Big Stone County		Unclassifiable/Attainment.		
Blue Earth County		Unclassifiable/Attainment.		
Brown County		Unclassifiable/Attainment.		
Carlton County		Unclassifiable/Attainment.		
Carver County		Unclassifiable/Attainment.		
Cass County		Unclassifiable/Attainment.		
Chippewa County		Unclassifiable/Attainment.		
Chisago County		Unclassifiable/Attainment.		
Clay County		Unclassifiable/Attainment.		
Clearwater County		Unclassifiable/Attainment.		
Cook County		Unclassifiable/Attainment.		
Cottonwood County		Unclassifiable/Attainment.		
Crow Wing County		Unclassifiable/Attainment.		
Dakota County		Unclassifiable/Attainment.		
Dodge County		Unclassifiable/Attainment.		
Douglas County		Unclassifiable/Attainment.		
Faribault County		Unclassifiable/Attainment.		
Fillmore County		Unclassifiable/Attainment.		
Freeborn County		Unclassifiable/Attainment.		
Goodhue County		Unclassifiable/Attainment.		
Grant County		Unclassifiable/Attainment.		
Hennepin County		Unclassifiable/Attainment.		
Houston County		Unclassifiable/Attainment.		
Hubbard County		Unclassifiable/Attainment.		
Isanti County		Unclassifiable/Attainment.		
Itasca County		Unclassifiable/Attainment.		
Jackson County		Unclassifiable/Attainment.		
Kanabec County		Unclassifiable/Attainment.		
Kandiyohi County		Unclassifiable/Attainment.		
Kittson County		Unclassifiable/Attainment.		
Koochiching County		Unclassifiable/Attainment.		
Lac qui Parle County		Unclassifiable/Attainment.		
Lake County		Unclassifiable/Attainment.		
Lake of the Woods County		Unclassifiable/Attainment.		
Le Sueur County		Unclassifiable/Attainment.		
Lincoln County		Unclassifiable/Attainment.		
Lyon County		Unclassifiable/Attainment.		
McLeod County		Unclassifiable/Attainment.		
Mahnomen County		Unclassifiable/Attainment.		
Marshall County		Unclassifiable/Attainment.		
Martin County		Unclassifiable/Attainment.		
Meeker County		Unclassifiable/Attainment.		
Mille Lacs County		Unclassifiable/Attainment.		
Morrison County		Unclassifiable/Attainment.		

MINNESOTA—1997 24-HOUR $PM_{2.5}$ NAAQS—Continued

[Primary and secondary]

Designated area	Designation [a]		Classification	
	Date [1]	Type	Date	Type
Mower County		Unclassifiable/Attainment.		
Murray County		Unclassifiable/Attainment.		
Nicollet County		Unclassifiable/Attainment.		
Nobles County		Unclassifiable/Attainment.		
Norman County		Unclassifiable/Attainment.		
Olmsted County		Unclassifiable/Attainment.		
Otter Tail County		Unclassifiable/Attainment.		
Pennington County		Unclassifiable/Attainment.		
Pine County		Unclassifiable/Attainment.		
Pipestone County		Unclassifiable/Attainment.		
Polk County		Unclassifiable/Attainment.		
Pope County		Unclassifiable/Attainment.		
Ramsey County		Unclassifiable/Attainment.		
Red Lake County		Unclassifiable/Attainment.		
Redwood County		Unclassifiable/Attainment.		
Renville County		Unclassifiable/Attainment.		
Rice County		Unclassifiable/Attainment.		
Rock County		Unclassifiable/Attainment.		
Roseau County		Unclassifiable/Attainment.		
St. Louis County		Unclassifiable/Attainment.		
Scott County		Unclassifiable/Attainment.		
Sherburne County		Unclassifiable/Attainment.		
Sibley County		Unclassifiable/Attainment.		
Stearns County		Unclassifiable/Attainment.		
Steele County		Unclassifiable/Attainment.		
Stevens County		Unclassifiable/Attainment.		
Swift County		Unclassifiable/Attainment.		
Todd County		Unclassifiable/Attainment.		
Traverse County		Unclassifiable/Attainment.		
Wabasha County		Unclassifiable/Attainment.		
Wadena County		Unclassifiable/Attainment.		
Waseca County		Unclassifiable/Attainment.		
Washington County		Unclassifiable/Attainment.		
Watonwan County		Unclassifiable/Attainment.		
Wilkin County		Unclassifiable/Attainment.		
Winona County		Unclassifiable/Attainment.		
Wright County		Unclassifiable/Attainment.		
Yellow Medicine County		Unclassifiable/Attainment.		

[a] Includes Indian Country located in each county or area, except as otherwise specified.
[1] This date is 90 days after January 5, 2005, unless otherwise noted.

MINNESOTA—2006 24-HOUR $PM_{2.5}$ NAAQS

[Primary and secondary]

Designated area	Designation [a]		Classification	
	Date [1]	Type	Date	Type
Statewide:				
Aitkin County		Unclassifiable/Attainment.		
Anoka County		Unclassifiable/Attainment.		
Becker County		Unclassifiable/Attainment.		
Beltrami County		Unclassifiable/Attainment.		
Benton County		Unclassifiable/Attainment.		
Big Stone County		Unclassifiable/Attainment.		
Blue Earth County		Unclassifiable/Attainment.		
Brown County		Unclassifiable/Attainment.		
Carlton County		Unclassifiable/Attainment.		
Carver County		Unclassifiable/Attainment.		
Cass County		Unclassifiable/Attainment.		
Chippewa County		Unclassifiable/Attainment.		
Chisago County		Unclassifiable/Attainment.		
Clay County		Unclassifiable/Attainment.		
Clearwater County		Unclassifiable/Attainment.		
Cook County		Unclassifiable/Attainment.		
Cottonwood County		Unclassifiable/Attainment.		
Crow Wing County		Unclassifiable/Attainment.		
Dakota County		Unclassifiable/Attainment.		

MINNESOTA—2006 24-HOUR $PM_{2.5}$ NAAQS—Continued

[Primary and secondary]

Designated area	Designation [a]		Classification	
	Date [1]	Type	Date	Type
Dodge County		Unclassifiable/Attainment.		
Douglas County		Unclassifiable/Attainment.		
Faribault County		Unclassifiable/Attainment.		
Fillmore County		Unclassifiable/Attainment.		
Freeborn County		Unclassifiable/Attainment.		
Goodhue County		Unclassifiable/Attainment.		
Grant County		Unclassifiable/Attainment.		
Hennepin County		Unclassifiable/Attainment.		
Houston County		Unclassifiable/Attainment.		
Hubbard County		Unclassifiable/Attainment.		
Isanti County		Unclassifiable/Attainment.		
Itasca County		Unclassifiable/Attainment.		
Jackson County		Unclassifiable/Attainment.		
Kanabec County		Unclassifiable/Attainment.		
Kandiyohi County		Unclassifiable/Attainment.		
Kittson County		Unclassifiable/Attainment.		
Koochiching County		Unclassifiable/Attainment.		
Lac qui Parle County		Unclassifiable/Attainment.		
Lake County		Unclassifiable/Attainment.		
Lake of the Woods County		Unclassifiable/Attainment.		
Le Sueur County		Unclassifiable/Attainment.		
Lincoln County		Unclassifiable/Attainment.		
Lyon County		Unclassifiable/Attainment.		
McLeod County		Unclassifiable/Attainment.		
Mahnomen County		Unclassifiable/Attainment.		
Marshall County		Unclassifiable/Attainment.		
Martin County		Unclassifiable/Attainment.		
Meeker County		Unclassifiable/Attainment.		
Mille Lacs County		Unclassifiable/Attainment.		
Morrison County		Unclassifiable/Attainment.		
Mower County		Unclassifiable/Attainment.		
Murray County		Unclassifiable/Attainment.		
Nicollet County		Unclassifiable/Attainment.		
Nobles County		Unclassifiable/Attainment.		
Norman County		Unclassifiable/Attainment.		
Olmsted County		Unclassifiable/Attainment.		
Otter Tail County		Unclassifiable/Attainment.		
Pennington County		Unclassifiable/Attainment.		
Pine County		Unclassifiable/Attainment.		
Pipestone County		Unclassifiable/Attainment.		
Polk County		Unclassifiable/Attainment.		
Pope County		Unclassifiable/Attainment.		
Ramsey County		Unclassifiable/Attainment.		
Red Lake County		Unclassifiable/Attainment.		
Redwood County		Unclassifiable/Attainment.		
Renville County		Unclassifiable/Attainment.		
Rice County		Unclassifiable/Attainment.		
Rock County		Unclassifiable/Attainment.		
Roseau County		Unclassifiable/Attainment.		
St. Louis County		Unclassifiable/Attainment.		
Scott County		Unclassifiable/Attainment.		
Sherburne County		Unclassifiable/Attainment.		
Sibley County		Unclassifiable/Attainment.		
Stearns County		Unclassifiable/Attainment.		
Steele County		Unclassifiable/Attainment.		
Stevens County		Unclassifiable/Attainment.		
Swift County		Unclassifiable/Attainment.		
Todd County		Unclassifiable/Attainment.		
Traverse County		Unclassifiable/Attainment.		
Wabasha County		Unclassifiable/Attainment.		
Wadena County		Unclassifiable/Attainment.		
Waseca County		Unclassifiable/Attainment.		
Washington County		Unclassifiable/Attainment.		
Watonwan County		Unclassifiable/Attainment.		
Wilkin County		Unclassifiable/Attainment.		
Winona County		Unclassifiable/Attainment.		
Wright County		Unclassifiable/Attainment.		
Yellow Medicine County		Unclassifiable/Attainment.		

[a] Includes Indian Country located in each county or area, except as otherwise specified.

[1] This date is 30 days after November 13, 2009, unless otherwise noted.

* * * * *

■ 26. Section 81.325 is amended as follows:

■ a. By removing the tables titled ''Mississippi—$PM_{2.5}$ (Annual NAAQS)'' and ''Mississippi—$PM_{2.5}$ [24-hour NAAQS]''.

■ b. By adding three tables titled ''Mississippi—1997 Annual $PM_{2.5}$ NAAQS (Primary and Secondary)'' and ''Mississippi—1997 24-hour $PM_{2.5}$ NAAQS (Primary and Secondary)'' and ''Mississippi—2006 24-hour $PM_{2.5}$ NAAQS (Primary and Secondary)'' before the table titled ''Mississippi—NO_2 (1971 Annual Standard)''.

The additions read as follows:

§ 81.325 Mississippi.

* * * * *

MISSISSIPPI—1997 ANNUAL $PM_{2.5}$ NAAQS

[Primary and secondary]

Designated area	Designation [a]		Classification	
	Date [1]	Type	Date	Type
Statewide:				
Adams County		Unclassifiable/Attainment.		
Alcorn County		Unclassifiable/Attainment.		
Amite County		Unclassifiable/Attainment.		
Attala County		Unclassifiable/Attainment.		
Benton County		Unclassifiable/Attainment.		
Bolivar County		Unclassifiable/Attainment.		
Calhoun County		Unclassifiable/Attainment.		
Carroll County		Unclassifiable/Attainment.		
Chickasaw County		Unclassifiable/Attainment.		
Choctaw County		Unclassifiable/Attainment.		
Claiborne County		Unclassifiable/Attainment.		
Clarke County		Unclassifiable/Attainment.		
Clay County		Unclassifiable/Attainment.		
Coahoma County		Unclassifiable/Attainment.		
Copiah County		Unclassifiable/Attainment.		
Covington County		Unclassifiable/Attainment.		
DeSoto County		Unclassifiable/Attainment.		
Forrest County		Unclassifiable/Attainment.		
Franklin County		Unclassifiable/Attainment.		
George County		Unclassifiable/Attainment.		
Greene County		Unclassifiable/Attainment.		
Grenada County		Unclassifiable/Attainment.		
Hancock County		Unclassifiable/Attainment.		
Harrison County		Unclassifiable/Attainment.		
Hinds County		Unclassifiable/Attainment.		
Holmes County		Unclassifiable/Attainment.		
Humphreys County		Unclassifiable/Attainment.		
Issaquena County		Unclassifiable/Attainment.		
Itawamba County		Unclassifiable/Attainment.		
Jackson County		Unclassifiable/Attainment.		
Jasper County		Unclassifiable/Attainment.		
Jefferson County		Unclassifiable/Attainment.		
Jefferson Davis County		Unclassifiable/Attainment.		
Jones County		Unclassifiable/Attainment.		
Kemper County		Unclassifiable/Attainment.		
Lafayette County		Unclassifiable/Attainment.		
Lamar County		Unclassifiable/Attainment.		
Lauderdale County		Unclassifiable/Attainment.		
Lawrence County		Unclassifiable/Attainment.		
Leake County		Unclassifiable/Attainment.		
Lee County		Unclassifiable/Attainment.		
Leflore County		Unclassifiable/Attainment.		
Lincoln County		Unclassifiable/Attainment.		
Lowndes County		Unclassifiable/Attainment.		
Madison County		Unclassifiable/Attainment.		
Marion County		Unclassifiable/Attainment.		
Marshall County		Unclassifiable/Attainment.		
Monroe County		Unclassifiable/Attainment.		
Montgomery County		Unclassifiable/Attainment.		
Neshoba County		Unclassifiable/Attainment.		
Newton County		Unclassifiable/Attainment.		
Noxubee County		Unclassifiable/Attainment.		
Oktibbeha County		Unclassifiable/Attainment.		
Panola County		Unclassifiable/Attainment.		
Pearl River County		Unclassifiable/Attainment.		
Perry County		Unclassifiable/Attainment.		

MISSISSIPPI—1997 ANNUAL $PM_{2.5}$ NAAQS—Continued

[Primary and secondary]

Designated area	Designation [a]		Classification	
	Date [1]	Type	Date	Type
Pike County		Unclassifiable/Attainment.		
Pontotoc County		Unclassifiable/Attainment.		
Prentiss County		Unclassifiable/Attainment.		
Quitman County		Unclassifiable/Attainment.		
Rankin County		Unclassifiable/Attainment.		
Scott County		Unclassifiable/Attainment.		
Sharkey County		Unclassifiable/Attainment.		
Simpson County		Unclassifiable/Attainment.		
Smith County		Unclassifiable/Attainment.		
Stone County		Unclassifiable/Attainment.		
Sunflower County		Unclassifiable/Attainment.		
Tallahatchie County		Unclassifiable/Attainment.		
Tate County		Unclassifiable/Attainment.		
Tippah County		Unclassifiable/Attainment.		
Tishomingo County		Unclassifiable/Attainment.		
Tunica County		Unclassifiable/Attainment.		
Union County		Unclassifiable/Attainment.		
Walthall County		Unclassifiable/Attainment.		
Warren County		Unclassifiable/Attainment.		
Washington County		Unclassifiable/Attainment.		
Wayne County		Unclassifiable/Attainment.		
Webster County		Unclassifiable/Attainment.		
Wilkinson County		Unclassifiable/Attainment.		
Winston County		Unclassifiable/Attainment.		
Yalobusha County		Unclassifiable/Attainment.		
Yazoo County		Unclassifiable/Attainment.		

[a] Includes Indian Country located in each county or area, except as otherwise specified.
[1] This date is 90 days after January 5, 2005, unless otherwise noted.

MISSISSIPPI—1997 24-HOUR $PM_{2.5}$ NAAQS

[Primary and secondary]

Designated area	Designation [a]		Classification	
	Date[1]	Type	Date	Type
Statewide:				
Adams County		Unclassifiable/Attainment.		
Alcorn County		Unclassifiable/Attainment.		
Amite County		Unclassifiable/Attainment.		
Attala County		Unclassifiable/Attainment.		
Benton County		Unclassifiable/Attainment.		
Bolivar County		Unclassifiable/Attainment.		
Calhoun County		Unclassifiable/Attainment.		
Carroll County		Unclassifiable/Attainment.		
Chickasaw County		Unclassifiable/Attainment.		
Choctaw County		Unclassifiable/Attainment.		
Claiborne County		Unclassifiable/Attainment.		
Clarke County		Unclassifiable/Attainment.		
Clay County		Unclassifiable/Attainment.		
Coahoma County		Unclassifiable/Attainment.		
Copiah County		Unclassifiable/Attainment.		
Covington County		Unclassifiable/Attainment.		
DeSoto County		Unclassifiable/Attainment.		
Forrest County		Unclassifiable/Attainment.		
Franklin County		Unclassifiable/Attainment.		
George County		Unclassifiable/Attainment.		
Greene County		Unclassifiable/Attainment.		
Grenada County		Unclassifiable/Attainment.		
Hancock County		Unclassifiable/Attainment.		
Harrison County		Unclassifiable/Attainment.		
Hinds County		Unclassifiable/Attainment.		
Holmes County		Unclassifiable/Attainment.		
Humphreys County		Unclassifiable/Attainment.		
Issaquena County		Unclassifiable/Attainment.		
Itawamba County		Unclassifiable/Attainment.		
Jackson County		Unclassifiable/Attainment.		
Jasper County		Unclassifiable/Attainment.		

MISSISSIPPI—1997 24-HOUR $PM_{2.5}$ NAAQS—Continued

[Primary and secondary]

Designated area	Designation [a]		Classification	
	Date [1]	Type	Date	Type
Jefferson County		Unclassifiable/Attainment.		
Jefferson Davis County		Unclassifiable/Attainment.		
Jones County		Unclassifiable/Attainment.		
Kemper County		Unclassifiable/Attainment.		
Lafayette County		Unclassifiable/Attainment.		
Lamar County		Unclassifiable/Attainment.		
Lauderdale County		Unclassifiable/Attainment.		
Lawrence County		Unclassifiable/Attainment.		
Leake County		Unclassifiable/Attainment.		
Lee County		Unclassifiable/Attainment.		
Leflore County		Unclassifiable/Attainment.		
Lincoln County		Unclassifiable/Attainment.		
Lowndes County		Unclassifiable/Attainment.		
Madison County		Unclassifiable/Attainment.		
Marion County		Unclassifiable/Attainment.		
Marshall County		Unclassifiable/Attainment.		
Monroe County		Unclassifiable/Attainment.		
Montgomery County		Unclassifiable/Attainment.		
Neshoba County		Unclassifiable/Attainment.		
Newton County		Unclassifiable/Attainment.		
Noxubee County		Unclassifiable/Attainment.		
Oktibbeha County		Unclassifiable/Attainment.		
Panola County		Unclassifiable/Attainment.		
Pearl River County		Unclassifiable/Attainment.		
Perry County		Unclassifiable/Attainment.		
Pike County		Unclassifiable/Attainment.		
Pontotoc County		Unclassifiable/Attainment.		
Prentiss County		Unclassifiable/Attainment.		
Quitman County		Unclassifiable/Attainment.		
Rankin County		Unclassifiable/Attainment.		
Scott County		Unclassifiable/Attainment.		
Sharkey County		Unclassifiable/Attainment.		
Simpson County		Unclassifiable/Attainment.		
Smith County		Unclassifiable/Attainment.		
Stone County		Unclassifiable/Attainment.		
Sunflower County		Unclassifiable/Attainment.		
Tallahatchie County		Unclassifiable/Attainment.		
Tate County		Unclassifiable/Attainment.		
Tippah County		Unclassifiable/Attainment.		
Tishomingo County		Unclassifiable/Attainment.		
Tunica County		Unclassifiable/Attainment.		
Union County		Unclassifiable/Attainment.		
Walthall County		Unclassifiable/Attainment.		
Warren County		Unclassifiable/Attainment.		
Washington County		Unclassifiable/Attainment.		
Wayne County		Unclassifiable/Attainment.		
Webster County		Unclassifiable/Attainment.		
Wilkinson County		Unclassifiable/Attainment.		
Winston County		Unclassifiable/Attainment.		
Yalobusha County		Unclassifiable/Attainment.		
Yazoo County		Unclassifiable/Attainment.		

[a] Includes Indian Country located in each county or area, except as otherwise specified.
[1] This date is 90 days after January 5, 2005, unless otherwise noted.

MISSISSIPPI—2006 24-HOUR $PM_{2.5}$ NAAQS

[Primary and secondary]

Designated area	Designation [a]		Classification	
	Date [1]	Type	Date	Type
Statewide:				
Adams County		Unclassifiable/Attainment.		
Alcorn County		Unclassifiable/Attainment.		
Amite County		Unclassifiable/Attainment.		
Attala County		Unclassifiable/Attainment.		
Benton County		Unclassifiable/Attainment.		
Bolivar County		Unclassifiable/Attainment.		

MISSISSIPPI—2006 24-HOUR $PM_{2.5}$ NAAQS—Continued

[Primary and secondary]

Designated area	Designation [a]		Classification	
	Date [1]	Type	Date	Type
Calhoun County		Unclassifiable/Attainment.		
Carroll County		Unclassifiable/Attainment.		
Chickasaw County		Unclassifiable/Attainment.		
Choctaw County		Unclassifiable/Attainment.		
Claiborne County		Unclassifiable/Attainment.		
Clarke County		Unclassifiable/Attainment.		
Clay County		Unclassifiable/Attainment.		
Coahoma County		Unclassifiable/Attainment.		
Copiah County		Unclassifiable/Attainment.		
Covington County		Unclassifiable/Attainment.		
DeSoto County		Unclassifiable/Attainment.		
Forrest County		Unclassifiable/Attainment.		
Franklin County		Unclassifiable/Attainment.		
George County		Unclassifiable/Attainment.		
Greene County		Unclassifiable/Attainment.		
Grenada County		Unclassifiable/Attainment.		
Hancock County		Unclassifiable/Attainment.		
Harrison County		Unclassifiable/Attainment.		
Hinds County		Unclassifiable/Attainment.		
Holmes County		Unclassifiable/Attainment.		
Humphreys County		Unclassifiable/Attainment.		
Issaquena County		Unclassifiable/Attainment.		
Itawamba County		Unclassifiable/Attainment.		
Jackson County		Unclassifiable/Attainment.		
Jasper County		Unclassifiable/Attainment.		
Jefferson County		Unclassifiable/Attainment.		
Jefferson Davis County		Unclassifiable/Attainment.		
Jones County		Unclassifiable/Attainment.		
Kemper County		Unclassifiable/Attainment.		
Lafayette County		Unclassifiable/Attainment.		
Lamar County		Unclassifiable/Attainment.		
Lauderdale County		Unclassifiable/Attainment.		
Lawrence County		Unclassifiable/Attainment.		
Leake County		Unclassifiable/Attainment.		
Lee County		Unclassifiable/Attainment.		
Leflore County		Unclassifiable/Attainment.		
Lincoln County		Unclassifiable/Attainment.		
Lowndes County		Unclassifiable/Attainment.		
Madison County		Unclassifiable/Attainment.		
Marion County		Unclassifiable/Attainment.		
Marshall County		Unclassifiable/Attainment.		
Monroe County		Unclassifiable/Attainment.		
Montgomery County		Unclassifiable/Attainment.		
Neshoba County		Unclassifiable/Attainment.		
Newton County		Unclassifiable/Attainment.		
Noxubee County		Unclassifiable/Attainment.		
Oktibbeha County		Unclassifiable/Attainment.		
Panola County		Unclassifiable/Attainment.		
Pearl River County		Unclassifiable/Attainment.		
Perry County		Unclassifiable/Attainment.		
Pike County		Unclassifiable/Attainment.		
Pontotoc County		Unclassifiable/Attainment.		
Prentiss County		Unclassifiable/Attainment.		
Quitman County		Unclassifiable/Attainment.		
Rankin County		Unclassifiable/Attainment.		
Scott County		Unclassifiable/Attainment.		
Sharkey County		Unclassifiable/Attainment.		
Simpson County		Unclassifiable/Attainment.		
Smith County		Unclassifiable/Attainment.		
Stone County		Unclassifiable/Attainment.		
Sunflower County		Unclassifiable/Attainment.		
Tallahatchie County		Unclassifiable/Attainment.		
Tate County		Unclassifiable/Attainment.		
Tippah County		Unclassifiable/Attainment.		
Tishomingo County		Unclassifiable/Attainment.		
Tunica County		Unclassifiable/Attainment.		
Union County		Unclassifiable/Attainment.		
Walthall County		Unclassifiable/Attainment.		
Warren County		Unclassifiable/Attainment.		

MISSISSIPPI—2006 24-HOUR $PM_{2.5}$ NAAQS—Continued

[Primary and secondary]

Designated area	Designation [a]		Classification	
	Date [1]	Type	Date	Type
Washington County		Unclassifiable/Attainment.		
Wayne County		Unclassifiable/Attainment.		
Webster County		Unclassifiable/Attainment.		
Wilkinson County		Unclassifiable/Attainment.		
Winston County		Unclassifiable/Attainment.		
Yalobusha County		Unclassifiable/Attainment.		
Yazoo County		Unclassifiable/Attainment.		

[a] Includes Indian Country located in each county or area, except as otherwise specified.
[1] This date is 30 days after November 13, 2009, unless otherwise noted.

* * * * *

■ 27. Section 81.326 is amended as follows:

■ a. By removing the tables titled ''Missouri—$PM_{2.5}$ (Annual NAAQS)'' and ''Missouri—$PM_{2.5}$ [24-hour NAAQS]''.

■ b. By adding three tables titled ''Missouri—1997 Annual $PM_{2.5}$ NAAQS (Primary and Secondary)'' and ''Missouri—1997 24-hour $PM_{2.5}$ NAAQS (Primary and Secondary)'' and ''Missouri—2006 24-hour $PM_{2.5}$ NAAQS (Primary and Secondary)'' before the table titled ''Missouri—NO_2 (1971 Annual Standard)''.

The additions read as follows:

§ 81.326 Missouri.

* * * * *

MISSOURI—1997 ANNUAL $PM_{2.5}$ NAAQS

[Primary and secondary]

Designated area	Designation [a]		Classification	
	Date [1]	Type	Date [2]	Type
St. Louis, MO–IL:				
Franklin County		Nonattainment		Moderate.
Jefferson County		Nonattainment		Moderate.
St. Charles County		Nonattainment		Moderate.
St. Louis County		Nonattainment		Moderate.
St. Louis City		Nonattainment		Moderate.
Rest of State:				
Adair County		Unclassifiable/Attainment.		
Andrew County		Unclassifiable/Attainment.		
Atchison County		Unclassifiable/Attainment.		
Audrain County		Unclassifiable/Attainment.		
Barry County		Unclassifiable/Attainment.		
Barton County		Unclassifiable/Attainment.		
Bates County		Unclassifiable/Attainment.		
Benton County		Unclassifiable/Attainment.		
Bollinger County		Unclassifiable/Attainment.		
Boone County		Unclassifiable/Attainment.		
Buchanan County		Unclassifiable/Attainment.		
Butler County		Unclassifiable/Attainment.		
Caldwell County		Unclassifiable/Attainment.		
Callaway County		Unclassifiable/Attainment.		
Camden County		Unclassifiable/Attainment.		
Cape Girardeau County		Unclassifiable/Attainment.		
Carroll County		Unclassifiable/Attainment.		
Carter County		Unclassifiable/Attainment.		
Cass County		Unclassifiable/Attainment.		
Cedar County		Unclassifiable/Attainment.		
Chariton County		Unclassifiable/Attainment.		
Christian County		Unclassifiable/Attainment.		
Clark County		Unclassifiable/Attainment.		
Clay County		Unclassifiable/Attainment.		
Clinton County		Unclassifiable/Attainment.		
Cole County		Unclassifiable/Attainment.		
Cooper County		Unclassifiable/Attainment.		
Crawford County		Unclassifiable/Attainment.		
Dade County		Unclassifiable/Attainment.		
Dallas County		Unclassifiable/Attainment.		
Daviess County		Unclassifiable/Attainment.		
DeKalb County		Unclassifiable/Attainment.		
Dent County		Unclassifiable/Attainment.		
Douglas County		Unclassifiable/Attainment.		

MISSOURI—1997 ANNUAL $PM_{2.5}$ NAAQS—Continued

[Primary and secondary]

Designated area	Designation [a]		Classification	
	Date [1]	Type	Date [2]	Type
Dunklin County		Unclassifiable/Attainment.		
Gasconade County		Unclassifiable/Attainment.		
Gentry County		Unclassifiable/Attainment.		
Greene County		Unclassifiable/Attainment.		
Grundy County		Unclassifiable/Attainment.		
Harrison County		Unclassifiable/Attainment.		
Henry County		Unclassifiable/Attainment.		
Hickory County		Unclassifiable/Attainment.		
Holt County		Unclassifiable/Attainment.		
Howard County		Unclassifiable/Attainment.		
Howell County		Unclassifiable/Attainment.		
Iron County		Unclassifiable/Attainment.		
Jackson County		Unclassifiable/Attainment.		
Jasper County		Unclassifiable/Attainment.		
Johnson County		Unclassifiable/Attainment.		
Knox County		Unclassifiable/Attainment.		
Laclede County		Unclassifiable/Attainment.		
Lafayette County		Unclassifiable/Attainment.		
Lawrence County		Unclassifiable/Attainment.		
Lewis County		Unclassifiable/Attainment.		
Lincoln County		Unclassifiable/Attainment.		
Linn County		Unclassifiable/Attainment.		
Livingston County		Unclassifiable/Attainment.		
McDonald County		Unclassifiable/Attainment.		
Macon County		Unclassifiable/Attainment.		
Madison County		Unclassifiable/Attainment.		
Maries County		Unclassifiable/Attainment.		
Marion County		Unclassifiable/Attainment.		
Mercer County		Unclassifiable/Attainment.		
Miller County		Unclassifiable/Attainment.		
Mississippi County		Unclassifiable/Attainment.		
Moniteau County		Unclassifiable/Attainment.		
Monroe County		Unclassifiable/Attainment.		
Montgomery County		Unclassifiable/Attainment.		
Morgan County		Unclassifiable/Attainment.		
New Madrid County		Unclassifiable/Attainment.		
Newton County		Unclassifiable/Attainment.		
Oregon County		Unclassifiable/Attainment.		
Osage County		Unclassifiable/Attainment.		
Ozark County		Unclassifiable/Attainment.		
Pemiscot County		Unclassifiable/Attainment.		
Perry County		Unclassifiable/Attainment.		
Pettis County		Unclassifiable/Attainment.		
Phelps County		Unclassifiable/Attainment.		
Pike County		Unclassifiable/Attainment.		
Platte County		Unclassifiable/Attainment.		
Polk County		Unclassifiable/Attainment.		
Pulaski County		Unclassifiable/Attainment.		
Putnam County		Unclassifiable/Attainment.		
Ralls County		Unclassifiable/Attainment.		
Randolph County		Unclassifiable/Attainment.		
Ray County		Unclassifiable/Attainment.		
Reynolds County		Unclassifiable/Attainment.		
Ripley County		Unclassifiable/Attainment.		
St. Clair County		Unclassifiable/Attainment.		
St. Genevieve County		Unclassifiable/Attainment.		
St. Francois County		Unclassifiable/Attainment.		
Saline County		Unclassifiable/Attainment.		
Schuyler County		Unclassifiable/Attainment.		
Scotland County		Unclassifiable/Attainment.		
Scott County		Unclassifiable/Attainment.		
Shannon County		Unclassifiable/Attainment.		
Shelby County		Unclassifiable/Attainment.		
Stoddard County		Unclassifiable/Attainment.		
Stone County		Unclassifiable/Attainment.		
Sullivan County		Unclassifiable/Attainment.		
Taney County		Unclassifiable/Attainment.		
Texas County		Unclassifiable/Attainment.		
Vernon County		Unclassifiable/Attainment.		

MISSOURI—1997 ANNUAL $PM_{2.5}$ NAAQS—Continued

[Primary and secondary]

Designated area	Designation [a]		Classification	
	Date [1]	Type	Date [2]	Type
Warren County		Unclassifiable/Attainment.		
Washington County		Unclassifiable/Attainment.		
Wayne County		Unclassifiable/Attainment.		
Webster County		Unclassifiable/Attainment.		
Worth County		Unclassifiable/Attainment.		
Wright County		Unclassifiable/Attainment.		

[a] Includes Indian Country located in each county or area, except as otherwise specified.
[1] This date is 90 days after January 5, 2005, unless otherwise noted.
[2] This date is July 2, 2014, unless otherwise noted.

MISSOURI—1997 24-HOUR $PM_{2.5}$ NAAQS

[Primary and secondary]

Designated area	Designation [a]		Classification	
	Date [1]	Type	Date	Type
Statewide:				
Adair County		Unclassifiable/Attainment.		
Andrew County		Unclassifiable/Attainment.		
Atchison County		Unclassifiable/Attainment.		
Audrain County		Unclassifiable/Attainment.		
Barry County		Unclassifiable/Attainment.		
Barton County		Unclassifiable/Attainment.		
Bates County		Unclassifiable/Attainment.		
Benton County		Unclassifiable/Attainment.		
Bollinger County		Unclassifiable/Attainment.		
Boone County		Unclassifiable/Attainment.		
Buchanan County		Unclassifiable/Attainment.		
Butler County		Unclassifiable/Attainment.		
Caldwell County		Unclassifiable/Attainment.		
Callaway County		Unclassifiable/Attainment.		
Camden County		Unclassifiable/Attainment.		
Cape Girardeau County		Unclassifiable/Attainment.		
Carroll County		Unclassifiable/Attainment.		
Carter County		Unclassifiable/Attainment.		
Cass County		Unclassifiable/Attainment.		
Cedar County		Unclassifiable/Attainment.		
Chariton County		Unclassifiable/Attainment.		
Christian County		Unclassifiable/Attainment.		
Clark County		Unclassifiable/Attainment.		
Clay County		Unclassifiable/Attainment.		
Clinton County		Unclassifiable/Attainment.		
Cole County		Unclassifiable/Attainment.		
Cooper County		Unclassifiable/Attainment.		
Crawford County		Unclassifiable/Attainment.		
Dade County		Unclassifiable/Attainment.		
Dallas County		Unclassifiable/Attainment.		
Daviess County		Unclassifiable/Attainment.		
DeKalb County		Unclassifiable/Attainment.		
Dent County		Unclassifiable/Attainment.		
Douglas County		Unclassifiable/Attainment.		
Dunklin County		Unclassifiable/Attainment.		
Franklin County		Unclassifiable/Attainment.		
Gasconade County		Unclassifiable/Attainment.		
Gentry County		Unclassifiable/Attainment.		
Greene County		Unclassifiable/Attainment.		
Grundy County		Unclassifiable/Attainment.		
Harrison County		Unclassifiable/Attainment.		
Henry County		Unclassifiable/Attainment.		
Hickory County		Unclassifiable/Attainment.		
Holt County		Unclassifiable/Attainment.		
Howard County		Unclassifiable/Attainment.		
Howell County		Unclassifiable/Attainment.		
Iron County		Unclassifiable/Attainment.		
Jackson County		Unclassifiable/Attainment.		
Jasper County		Unclassifiable/Attainment.		
Jefferson County		Unclassifiable/Attainment.		

MISSOURI—1997 24-HOUR $PM_{2.5}$ NAAQS—Continued

[Primary and secondary]

Designated area	Designation [a]		Classification	
	Date [1]	Type	Date	Type
Johnson County		Unclassifiable/Attainment.		
Knox County		Unclassifiable/Attainment.		
Laclede County		Unclassifiable/Attainment.		
Lafayette County		Unclassifiable/Attainment.		
Lawrence County		Unclassifiable/Attainment.		
Lewis County		Unclassifiable/Attainment.		
Lincoln County		Unclassifiable/Attainment.		
Linn County		Unclassifiable/Attainment.		
Livingston County		Unclassifiable/Attainment.		
McDonald County		Unclassifiable/Attainment.		
Macon County		Unclassifiable/Attainment.		
Madison County		Unclassifiable/Attainment.		
Maries County		Unclassifiable/Attainment.		
Marion County		Unclassifiable/Attainment.		
Mercer County		Unclassifiable/Attainment.		
Miller County		Unclassifiable/Attainment.		
Mississippi County		Unclassifiable/Attainment.		
Moniteau County		Unclassifiable/Attainment.		
Monroe County		Unclassifiable/Attainment.		
Montgomery County		Unclassifiable/Attainment.		
Morgan County		Unclassifiable/Attainment.		
New Madrid County		Unclassifiable/Attainment.		
Newton County		Unclassifiable/Attainment.		
Nodaway County		Unclassifiable/Attainment.		
Oregon County		Unclassifiable/Attainment.		
Osage County		Unclassifiable/Attainment.		
Ozark County		Unclassifiable/Attainment.		
Pemiscot County		Unclassifiable/Attainment.		
Perry County		Unclassifiable/Attainment.		
Pettis County		Unclassifiable/Attainment.		
Phelps County		Unclassifiable/Attainment.		
Pike County		Unclassifiable/Attainment.		
Platte County		Unclassifiable/Attainment.		
Polk County		Unclassifiable/Attainment.		
Pulaski County		Unclassifiable/Attainment.		
Putnam County		Unclassifiable/Attainment.		
Ralls County		Unclassifiable/Attainment.		
Randolph County		Unclassifiable/Attainment.		
Ray County		Unclassifiable/Attainment.		
Reynolds County		Unclassifiable/Attainment.		
Ripley County		Unclassifiable/Attainment.		
St Charles County		Unclassifiable/Attainment.		
St Clair County		Unclassifiable/Attainment.		
St Genevieve County		Unclassifiable/Attainment.		
St Francois County		Unclassifiable/Attainment.		
St Louis City		Unclassifiable/Attainment.		
St Louis County		Unclassifiable/Attainment.		
Saline County		Unclassifiable/Attainment.		
Schuyler County		Unclassifiable/Attainment.		
Scotland County		Unclassifiable/Attainment.		
Scott County		Unclassifiable/Attainment.		
Shannon County		Unclassifiable/Attainment.		
Shelby County		Unclassifiable/Attainment.		
Stoddard County		Unclassifiable/Attainment.		
Stone County		Unclassifiable/Attainment.		
Sullivan County		Unclassifiable/Attainment.		
Taney County		Unclassifiable/Attainment.		
Texas County		Unclassifiable/Attainment.		
Vernon County		Unclassifiable/Attainment.		
Warren County		Unclassifiable/Attainment.		
Washington County		Unclassifiable/Attainment.		
Wayne County		Unclassifiable/Attainment.		
Webster County		Unclassifiable/Attainment.		
Worth County		Unclassifiable/Attainment.		
Wright County		Unclassifiable/Attainment.		

[a] Includes Indian Country located in each county or area, except as otherwise specified.
[1] This date is 90 days after January 5, 2005, unless otherwise noted.

MISSOURI—2006 24-HOUR $PM_{2.5}$ NAAQS

[Primary and secondary]

Designated area	Designation [a]		Classification	
	Date [1]	Type	Date	Type
Statewide:				
Adair County		Unclassifiable/Attainment.		
Andrew County		Unclassifiable/Attainment.		
Atchison County		Unclassifiable/Attainment.		
Audrain County		Unclassifiable/Attainment.		
Barry County		Unclassifiable/Attainment.		
Barton County		Unclassifiable/Attainment.		
Bates County		Unclassifiable/Attainment.		
Benton County		Unclassifiable/Attainment.		
Bollinger County		Unclassifiable/Attainment.		
Boone County		Unclassifiable/Attainment.		
Buchanan County		Unclassifiable/Attainment.		
Butler County		Unclassifiable/Attainment.		
Caldwell County		Unclassifiable/Attainment.		
Callaway County		Unclassifiable/Attainment.		
Camden County		Unclassifiable/Attainment.		
Cape Girardeau County		Unclassifiable/Attainment.		
Carroll County		Unclassifiable/Attainment.		
Carter County		Unclassifiable/Attainment.		
Cass County		Unclassifiable/Attainment.		
Cedar County		Unclassifiable/Attainment.		
Chariton County		Unclassifiable/Attainment.		
Christian County		Unclassifiable/Attainment.		
Clark County		Unclassifiable/Attainment.		
Clay County		Unclassifiable/Attainment.		
Clinton County		Unclassifiable/Attainment.		
Cole County		Unclassifiable/Attainment.		
Cooper County		Unclassifiable/Attainment.		
Crawford County		Unclassifiable/Attainment.		
Dade County		Unclassifiable/Attainment.		
Dallas County		Unclassifiable/Attainment.		
Daviess County		Unclassifiable/Attainment.		
DeKalb County		Unclassifiable/Attainment.		
Dent County		Unclassifiable/Attainment.		
Douglas County		Unclassifiable/Attainment.		
Dunklin County		Unclassifiable/Attainment.		
Franklin County		Unclassifiable/Attainment.		
Gasconade County		Unclassifiable/Attainment.		
Gentry County		Unclassifiable/Attainment.		
Greene County		Unclassifiable/Attainment.		
Grundy County		Unclassifiable/Attainment.		
Harrison County		Unclassifiable/Attainment.		
Henry County		Unclassifiable/Attainment.		
Hickory County		Unclassifiable/Attainment.		
Holt County		Unclassifiable/Attainment.		
Howard County		Unclassifiable/Attainment.		
Howell County		Unclassifiable/Attainment.		
Iron County		Unclassifiable/Attainment.		
Jackson County		Unclassifiable/Attainment.		
Jasper County		Unclassifiable/Attainment.		
Jefferson County		Unclassifiable/Attainment.		
Johnson County		Unclassifiable/Attainment.		
Knox County		Unclassifiable/Attainment.		
Laclede County		Unclassifiable/Attainment.		
Lafayette County		Unclassifiable/Attainment.		
Lawrence County		Unclassifiable/Attainment.		
Lewis County		Unclassifiable/Attainment.		
Lincoln County		Unclassifiable/Attainment.		
Linn County		Unclassifiable/Attainment.		
Livingston County		Unclassifiable/Attainment.		
McDonald County		Unclassifiable/Attainment.		
Macon County		Unclassifiable/Attainment.		
Madison County		Unclassifiable/Attainment.		
Maries County		Unclassifiable/Attainment.		
Marion County		Unclassifiable/Attainment.		
Mercer County		Unclassifiable/Attainment.		
Miller County		Unclassifiable/Attainment.		
Mississippi County		Unclassifiable/Attainment.		
Moniteau County		Unclassifiable/Attainment.		

MISSOURI—2006 24-HOUR $PM_{2.5}$ NAAQS—Continued

[Primary and secondary]

Designated area	Designation [a]		Classification	
	Date [1]	Type	Date	Type
Monroe County		Unclassifiable/Attainment.		
Montgomery County		Unclassifiable/Attainment.		
Morgan County		Unclassifiable/Attainment.		
New Madrid County		Unclassifiable/Attainment.		
Newton County		Unclassifiable/Attainment.		
Nodaway County		Unclassifiable/Attainment.		
Oregon County		Unclassifiable/Attainment.		
Osage County		Unclassifiable/Attainment.		
Ozark County		Unclassifiable/Attainment.		
Pemiscot County		Unclassifiable/Attainment.		
Perry County		Unclassifiable/Attainment.		
Pettis County		Unclassifiable/Attainment.		
Phelps County		Unclassifiable/Attainment.		
Pike County		Unclassifiable/Attainment.		
Platte County		Unclassifiable/Attainment.		
Polk County		Unclassifiable/Attainment.		
Pulaski County		Unclassifiable/Attainment.		
Putnam County		Unclassifiable/Attainment.		
Ralls County		Unclassifiable/Attainment.		
Randolph County		Unclassifiable/Attainment.		
Ray County		Unclassifiable/Attainment.		
Reynolds County		Unclassifiable/Attainment.		
Ripley County		Unclassifiable/Attainment.		
St Charles County		Unclassifiable/Attainment.		
St Clair County		Unclassifiable/Attainment.		
St Genevieve County		Unclassifiable/Attainment.		
St Francois County		Unclassifiable/Attainment.		
St Louis City		Unclassifiable/Attainment.		
St Louis County		Unclassifiable/Attainment.		
Saline County		Unclassifiable/Attainment.		
Schuyler County		Unclassifiable/Attainment.		
Scotland County		Unclassifiable/Attainment.		
Scott County		Unclassifiable/Attainment.		
Shannon County		Unclassifiable/Attainment.		
Shelby County		Unclassifiable/Attainment.		
Stoddard County		Unclassifiable/Attainment.		
Stone County		Unclassifiable/Attainment.		
Sullivan County		Unclassifiable/Attainment.		
Taney County		Unclassifiable/Attainment.		
Texas County		Unclassifiable/Attainment.		
Vernon County		Unclassifiable/Attainment.		
Warren County		Unclassifiable/Attainment.		
Washington County		Unclassifiable/Attainment.		
Wayne County		Unclassifiable/Attainment.		
Webster County		Unclassifiable/Attainment.		
Worth County		Unclassifiable/Attainment.		
Wright County		Unclassifiable/Attainment.		

[a] Includes Indian Country located in each county or area, except as otherwise specified.
[1] This date is 30 days after November 13, 2009, unless otherwise noted.

* * * * *

■ 28. Section 81.327 is amended as follows:

■ a. By removing the tables titled ''Montana—$PM_{2.5}$ (Annual NAAQS)'' and ''Montana—$PM_{2.5}$ [24-hour NAAQS]''.

■ b. By adding three tables titled ''Montana—1997 Annual $PM_{2.5}$ NAAQS (Primary and Secondary)'' and ''Montana—1997 24-hour $PM_{2.5}$ NAAQS (Primary and Secondary)'' and ''Montana—2006 24-hour $PM_{2.5}$ NAAQS (Primary and Secondary)'' before the table titled ''Montana—NO_2 (1971 Annual Standard)''.

The additions read as follows:

§ 81.327 Montana.

* * * * *

MONTANA—1997 ANNUAL $PM_{2.5}$ NAAQS

[Primary and secondary]

Designated area	Designation [a]		Classification	
	Date [1]	Type	Date [2]	Type
Libby, MT:				

MONTANA—1997 ANNUAL $PM_{2.5}$ NAAQS—Continued

[Primary and secondary]

Designated area	Designation [a]		Classification	
	Date [1]	Type	Date [2]	Type
Lincoln County (part)		Nonattainment		Moderate.
The area bounded by lines from Universal Transverse Mercador Zone 11 (North American Datum 1983) coordinates beginning at 600,000mE, 5,370,000mN east to 620,000mE, 5370,000mN south to 620,000mE, 5340,000mN west to 600,000mE, 5,340,000mN north to 600,000mE, 5,370,000mN.				
Rest of State:				
Beaverhead County		Unclassifiable/Attainment.		
Big Horn County		Unclassifiable/Attainment.		
Blaine County		Unclassifiable/Attainment.		
Broadwater County		Unclassifiable/Attainment.		
Carbon County		Unclassifiable/Attainment.		
Carter County		Unclassifiable/Attainment.		
Cascade County		Unclassifiable/Attainment.		
Chouteau County		Unclassifiable/Attainment.		
Custer County		Unclassifiable/Attainment.		
Daniels County		Unclassifiable/Attainment.		
Dawson County		Unclassifiable/Attainment.		
Deer Lodge County		Unclassifiable/Attainment.		
Fallon County		Unclassifiable/Attainment.		
Fergus County		Unclassifiable/Attainment.		
Flathead County		Unclassifiable/Attainment.		
Gallatin County		Unclassifiable/Attainment.		
Garfield County		Unclassifiable/Attainment.		
Glacier County		Unclassifiable/Attainment.		
Golden Valley County		Unclassifiable/Attainment.		
Granite County		Unclassifiable/Attainment.		
Hill County		Unclassifiable/Attainment.		
Jefferson County		Unclassifiable/Attainment.		
Judith Basin County		Unclassifiable/Attainment.		
Lake County		Unclassifiable/Attainment.		
Lewis and Clark County		Unclassifiable/Attainment.		
Liberty County		Unclassifiable/Attainment.		
Lincoln County (remainder)		Unclassifiable/Attainment.		
McCone County		Unclassifiable/Attainment.		
Madison County		Unclassifiable/Attainment.		
Meagher County		Unclassifiable/Attainment.		
Mineral County		Unclassifiable/Attainment.		
Missoula County		Unclassifiable/Attainment.		
Musselshell County		Unclassifiable/Attainment.		
Park County		Unclassifiable/Attainment.		
Petroleum County		Unclassifiable/Attainment.		
Phillips County		Unclassifiable/Attainment.		
Pondera County		Unclassifiable/Attainment.		
Powder River County		Unclassifiable/Attainment.		
Powell County		Unclassifiable/Attainment.		
Prairie County		Unclassifiable/Attainment.		
Ravalli County		Unclassifiable/Attainment.		
Richland County		Unclassifiable/Attainment.		
Roosevelt County		Unclassifiable/Attainment.		
Rosebud County		Unclassifiable/Attainment.		
Sanders County		Unclassifiable/Attainment.		
Sheridan County		Unclassifiable/Attainment.		
Silver Bow County		Unclassifiable/Attainment.		
Stillwater County		Unclassifiable/Attainment.		
Sweet Grass County		Unclassifiable/Attainment.		
Teton County		Unclassifiable/Attainment.		
Toole County		Unclassifiable/Attainment.		
Treasure County		Unclassifiable/Attainment.		
Valley County		Unclassifiable/Attainment.		
Wheatland County		Unclassifiable/Attainment.		
Wibaux County		Unclassifiable/Attainment.		
Yellowstone County		Unclassifiable/Attainment.		

[a] Includes Indian Country located in each county or area, except as otherwise specified.
[1] This date is 90 days after January 5, 2005, unless otherwise noted.
[2] This date is July 2, 2014, unless otherwise noted.

MONTANA—1997 24-HOUR $PM_{2.5}$ NAAQS

[Primary and secondary]

Designated area	Designation [a]		Classification	
	Date [1]	Type	Date	Type
Statewide:				
Beaverhead County		Unclassifiable/Attainment.		
Big Horn County		Unclassifiable/Attainment.		
Blaine County		Unclassifiable/Attainment.		
Broadwater County		Unclassifiable/Attainment.		
Carbon County		Unclassifiable/Attainment.		
Carter County		Unclassifiable/Attainment.		
Cascade County		Unclassifiable/Attainment.		
Chouteau County		Unclassifiable/Attainment.		
Custer County		Unclassifiable/Attainment.		
Daniels County		Unclassifiable/Attainment.		
Dawson County		Unclassifiable/Attainment.		
Deer Lodge County		Unclassifiable/Attainment.		
Fallon County		Unclassifiable/Attainment.		
Fergus County		Unclassifiable/Attainment.		
Flathead County		Unclassifiable/Attainment.		
Gallatin County		Unclassifiable/Attainment.		
Garfield County		Unclassifiable/Attainment.		
Glacier County		Unclassifiable/Attainment.		
Golden Valley County		Unclassifiable/Attainment.		
Granite County		Unclassifiable/Attainment.		
Hill County		Unclassifiable/Attainment.		
Jefferson County		Unclassifiable/Attainment.		
Judith Basin County		Unclassifiable/Attainment.		
Lake County		Unclassifiable/Attainment.		
Lewis and Clark County		Unclassifiable/Attainment.		
Liberty County		Unclassifiable/Attainment.		
Lincoln County		Unclassifiable/Attainment.		
McCone County		Unclassifiable/Attainment.		
Madison County		Unclassifiable/Attainment.		
Meagher County		Unclassifiable/Attainment.		
Mineral County		Unclassifiable/Attainment.		
Missoula County		Unclassifiable/Attainment.		
Musselshell County		Unclassifiable/Attainment.		
Park County		Unclassifiable/Attainment.		
Petroleum County		Unclassifiable/Attainment.		
Phillips County		Unclassifiable/Attainment.		
Pondera County		Unclassifiable/Attainment.		
Powder River County		Unclassifiable/Attainment.		
Powell County		Unclassifiable/Attainment.		
Prairie County		Unclassifiable/Attainment.		
Ravalli County		Unclassifiable/Attainment.		
Richland County		Unclassifiable/Attainment.		
Roosevelt County		Unclassifiable/Attainment.		
Rosebud County		Unclassifiable/Attainment.		
Sanders County		Unclassifiable/Attainment.		
Sheridan County		Unclassifiable/Attainment.		
Silver Bow County		Unclassifiable/Attainment.		
Stillwater County		Unclassifiable/Attainment.		
Sweet Grass County		Unclassifiable/Attainment.		
Teton County		Unclassifiable/Attainment.		
Toole County		Unclassifiable/Attainment.		
Treasure County		Unclassifiable/Attainment.		
Valley County		Unclassifiable/Attainment.		
Wheatland County		Unclassifiable/Attainment.		
Wibaux County		Unclassifiable/Attainment.		
Yellowstone County		Unclassifiable/Attainment.		

[a] Includes Indian Country located in each county or area, except as otherwise specified.
[1] This date is 90 days after January 5, 2005, unless otherwise noted.

MONTANA—2006 24-HOUR $PM_{2.5}$ NAAQS

[Primary and secondary]

Designated area	Designation [a]		Classification	
	Date [1]	Type	Date	Type
Statewide:				

MONTANA—2006 24-HOUR $PM_{2.5}$ NAAQS—Continued

[Primary and secondary]

Designated area	Designation [a]		Classification	
	Date [1]	Type	Date	Type
Beaverhead County		Unclassifiable/Attainment.		
Big Horn County		Unclassifiable/Attainment.		
Blaine County		Unclassifiable/Attainment.		
Broadwater County		Unclassifiable/Attainment.		
Carbon County		Unclassifiable/Attainment.		
Carter County		Unclassifiable/Attainment.		
Cascade County		Unclassifiable/Attainment.		
Chouteau County		Unclassifiable/Attainment.		
Custer County		Unclassifiable/Attainment.		
Daniels County		Unclassifiable/Attainment.		
Dawson County		Unclassifiable/Attainment.		
Deer Lodge County		Unclassifiable/Attainment.		
Fallon County		Unclassifiable/Attainment.		
Fergus County		Unclassifiable/Attainment.		
Flathead County		Unclassifiable/Attainment.		
Gallatin County		Unclassifiable/Attainment.		
Garfield County		Unclassifiable/Attainment.		
Glacier County		Unclassifiable/Attainment.		
Golden Valley County		Unclassifiable/Attainment.		
Granite County		Unclassifiable/Attainment.		
Hill County		Unclassifiable/Attainment.		
Jefferson County		Unclassifiable/Attainment.		
Judith Basin County		Unclassifiable/Attainment.		
Lake County		Unclassifiable/Attainment.		
Lewis and Clark County		Unclassifiable/Attainment.		
Liberty County		Unclassifiable/Attainment.		
Lincoln County		Unclassifiable/Attainment.		
McCone County		Unclassifiable/Attainment.		
Madison County		Unclassifiable/Attainment.		
Meagher County		Unclassifiable/Attainment.		
Mineral County		Unclassifiable/Attainment.		
Missoula County		Unclassifiable/Attainment.		
Musselshell County		Unclassifiable/Attainment.		
Park County		Unclassifiable/Attainment.		
Petroleum County		Unclassifiable/Attainment.		
Phillips County		Unclassifiable/Attainment.		
Pondera County		Unclassifiable/Attainment.		
Powder River County		Unclassifiable/Attainment.		
Powell County		Unclassifiable/Attainment.		
Prairie County		Unclassifiable/Attainment.		
Ravalli County		Unclassifiable/Attainment.		
Richland County		Unclassifiable/Attainment.		
Roosevelt County		Unclassifiable/Attainment.		
Rosebud County		Unclassifiable/Attainment.		
Sanders County		Unclassifiable/Attainment.		
Sheridan County		Unclassifiable/Attainment.		
Silver Bow County		Unclassifiable/Attainment.		
Stillwater County		Unclassifiable/Attainment.		
Sweet Grass County		Unclassifiable/Attainment.		
Teton County		Unclassifiable/Attainment.		
Toole County		Unclassifiable/Attainment.		
Treasure County		Unclassifiable/Attainment.		
Valley County		Unclassifiable/Attainment.		
Wheatland County		Unclassifiable/Attainment.		
Wibaux County		Unclassifiable/Attainment.		
Yellowstone County		Unclassifiable/Attainment.		

[a] Includes Indian Country located in each county or area, except as otherwise specified.
[1] This date is 30 days after November 13, 2009, unless otherwise noted.

* * * * *

■ 29. Section 81.328 is amended as follows:

■ a. By removing the tables titled ''Nebraska—$PM_{2.5}$ (Annual NAAQS)'' and ''Nebraska—$PM_{2.5}$ [24-hour NAAQS]''.

■ b. By adding three tables titled ''Nebraska—1997 Annual $PM_{2.5}$ NAAQS (Primary and Secondary)'' and ''Nebraska—1997 24-hour $PM_{2.5}$ NAAQS (Primary and Secondary)'' and ''Nebraska—2006 24-hour $PM_{2.5}$ NAAQS (Primary and Secondary)'' before the table titled ''Nebraska—NO_2 (1971 Annual Standard)''.

The additions read as follows:

§ 81.328 Nebraska.

* * * * *

NEBRASKA—1997 ANNUAL $PM_{2.5}$ NAAQS

[Primary and secondary]

Designated area	Designation [a]		Classification	
	Date [1]	Type	Date	Type
Statewide:				
Adams County		Unclassifiable/Attainment.		
Antelope County		Unclassifiable/Attainment.		
Arthur County		Unclassifiable/Attainment.		
Banner County		Unclassifiable/Attainment.		
Blaine County		Unclassifiable/Attainment.		
Boone County		Unclassifiable/Attainment.		
Box Butte County		Unclassifiable/Attainment.		
Boyd County		Unclassifiable/Attainment.		
Brown County		Unclassifiable/Attainment.		
Buffalo County		Unclassifiable/Attainment.		
Burt County		Unclassifiable/Attainment.		
Butler County		Unclassifiable/Attainment.		
Cass County		Unclassifiable/Attainment.		
Cedar County		Unclassifiable/Attainment.		
Chase County		Unclassifiable/Attainment.		
Cherry County		Unclassifiable/Attainment.		
Cheyenne County		Unclassifiable/Attainment.		
Clay County		Unclassifiable/Attainment.		
Colfax County		Unclassifiable/Attainment.		
Cuming County		Unclassifiable/Attainment.		
Custer County		Unclassifiable/Attainment.		
Dakota County		Unclassifiable/Attainment.		
Dawes County		Unclassifiable/Attainment.		
Dawson County		Unclassifiable/Attainment.		
Deuel County		Unclassifiable/Attainment.		
Dixon County		Unclassifiable/Attainment.		
Dodge County		Unclassifiable/Attainment.		
Douglas County		Unclassifiable/Attainment.		
Dundy County		Unclassifiable/Attainment.		
Fillmore County		Unclassifiable/Attainment.		
Franklin County		Unclassifiable/Attainment.		
Frontier County		Unclassifiable/Attainment.		
Furnas County		Unclassifiable/Attainment.		
Gage County		Unclassifiable/Attainment.		
Garden County		Unclassifiable/Attainment.		
Garfield County		Unclassifiable/Attainment.		
Gosper County		Unclassifiable/Attainment.		
Grant County		Unclassifiable/Attainment.		
Greeley County		Unclassifiable/Attainment.		
Hall County		Unclassifiable/Attainment.		
Hamilton County		Unclassifiable/Attainment.		
Harlan County		Unclassifiable/Attainment.		
Hayes County		Unclassifiable/Attainment.		
Hitchcock County		Unclassifiable/Attainment.		
Holt County		Unclassifiable/Attainment.		
Hooker County		Unclassifiable/Attainment.		
Howard County		Unclassifiable/Attainment.		
Jefferson County		Unclassifiable/Attainment.		
Johnson County		Unclassifiable/Attainment.		
Kearney County		Unclassifiable/Attainment.		
Keith County		Unclassifiable/Attainment.		
Keya Paha County		Unclassifiable/Attainment.		
Kimball County		Unclassifiable/Attainment.		
Knox County		Unclassifiable/Attainment.		
Lancaster County		Unclassifiable/Attainment.		
Lincoln County		Unclassifiable/Attainment.		
Logan County		Unclassifiable/Attainment.		
Loup County		Unclassifiable/Attainment.		
McPherson County		Unclassifiable/Attainment.		
Madison County		Unclassifiable/Attainment.		
Merrick County		Unclassifiable/Attainment.		
Morrill County		Unclassifiable/Attainment.		
Nance County		Unclassifiable/Attainment.		
Nemaha County		Unclassifiable/Attainment.		
Nuckolls County		Unclassifiable/Attainment.		
Otoe County		Unclassifiable/Attainment.		
Pawnee County		Unclassifiable/Attainment.		
Perkins County		Unclassifiable/Attainment.		

NEBRASKA—1997 ANNUAL $PM_{2.5}$ NAAQS—Continued

[Primary and secondary]

Designated area	Designation [a]		Classification	
	Date [1]	Type	Date	Type
Phelps County		Unclassifiable/Attainment.		
Pierce County		Unclassifiable/Attainment.		
Platte County		Unclassifiable/Attainment.		
Polk County		Unclassifiable/Attainment.		
Red Willow County		Unclassifiable/Attainment.		
Richardson County		Unclassifiable/Attainment.		
Rock County		Unclassifiable/Attainment.		
Saline County		Unclassifiable/Attainment.		
Sarpy County		Unclassifiable/Attainment.		
Saunders County		Unclassifiable/Attainment.		
Scotts Bluff County		Unclassifiable/Attainment.		
Seward County		Unclassifiable/Attainment.		
Sheridan County		Unclassifiable/Attainment.		
Sherman County		Unclassifiable/Attainment.		
Sioux County		Unclassifiable/Attainment.		
Stanton County		Unclassifiable/Attainment.		
Thayer County		Unclassifiable/Attainment.		
Thomas County		Unclassifiable/Attainment.		
Thurston County		Unclassifiable/Attainment.		
Valley County		Unclassifiable/Attainment.		
Washington County		Unclassifiable/Attainment.		
Wayne County		Unclassifiable/Attainment.		
Webster County		Unclassifiable/Attainment.		
Wheeler County		Unclassifiable/Attainment.		
York County		Unclassifiable/Attainment.		

[a] Includes Indian Country located in each county or area, except as otherwise specified.
[1] This date is 90 days after January 5, 2005, unless otherwise noted.

NEBRASKA—1997 24-HOUR $PM_{2.5}$ NAAQS

[Primary and secondary]

Designated area	Designation [a]		Classification	
	Date [1]	Type	Date	Type
Statewide:				
Adams County		Unclassifiable/Attainment.		
Antelope County		Unclassifiable/Attainment.		
Arthur County		Unclassifiable/Attainment.		
Banner County		Unclassifiable/Attainment.		
Blaine County		Unclassifiable/Attainment.		
Boone County		Unclassifiable/Attainment.		
Box Butte County		Unclassifiable/Attainment.		
Boyd County		Unclassifiable/Attainment.		
Brown County		Unclassifiable/Attainment.		
Buffalo County		Unclassifiable/Attainment.		
Burt County		Unclassifiable/Attainment.		
Butler County		Unclassifiable/Attainment.		
Cass County		Unclassifiable/Attainment.		
Cedar County		Unclassifiable/Attainment.		
Chase County		Unclassifiable/Attainment.		
Cherry County		Unclassifiable/Attainment.		
Cheyenne County		Unclassifiable/Attainment.		
Clay County		Unclassifiable/Attainment.		
Colfax County		Unclassifiable/Attainment.		
Cuming County		Unclassifiable/Attainment.		
Custer County		Unclassifiable/Attainment.		
Dakota County		Unclassifiable/Attainment.		
Dawes County		Unclassifiable/Attainment.		
Dawson County		Unclassifiable/Attainment.		
Deuel County		Unclassifiable/Attainment.		
Dixon County		Unclassifiable/Attainment.		
Dodge County		Unclassifiable/Attainment.		
Douglas County		Unclassifiable/Attainment.		
Dundy County		Unclassifiable/Attainment.		
Fillmore County		Unclassifiable/Attainment.		
Franklin County		Unclassifiable/Attainment.		
Frontier County		Unclassifiable/Attainment.		

NEBRASKA—1997 24-HOUR $PM_{2.5}$ NAAQS—Continued

[Primary and secondary]

Designated area	Designation [a]		Classification	
	Date [1]	Type	Date	Type
Furnas County		Unclassifiable/Attainment.		
Gage County		Unclassifiable/Attainment.		
Garden County		Unclassifiable/Attainment.		
Garfield County		Unclassifiable/Attainment.		
Gosper County		Unclassifiable/Attainment.		
Grant County		Unclassifiable/Attainment.		
Greeley County		Unclassifiable/Attainment.		
Hall County		Unclassifiable/Attainment.		
Hamilton County		Unclassifiable/Attainment.		
Harlan County		Unclassifiable/Attainment.		
Hayes County		Unclassifiable/Attainment.		
Hitchcock County		Unclassifiable/Attainment.		
Holt County		Unclassifiable/Attainment.		
Hooker County		Unclassifiable/Attainment.		
Howard County		Unclassifiable/Attainment.		
Jefferson County		Unclassifiable/Attainment.		
Johnson County		Unclassifiable/Attainment.		
Kearney County		Unclassifiable/Attainment.		
Keith County		Unclassifiable/Attainment.		
Keya Paha County		Unclassifiable/Attainment.		
Kimball County		Unclassifiable/Attainment.		
Knox County		Unclassifiable/Attainment.		
Lancaster County		Unclassifiable/Attainment.		
Lincoln County		Unclassifiable/Attainment.		
Logan County		Unclassifiable/Attainment.		
Loup County		Unclassifiable/Attainment.		
McPherson County		Unclassifiable/Attainment.		
Madison County		Unclassifiable/Attainment.		
Merrick County		Unclassifiable/Attainment.		
Morrill County		Unclassifiable/Attainment.		
Nance County		Unclassifiable/Attainment.		
Nemaha County		Unclassifiable/Attainment.		
Nuckolls County		Unclassifiable/Attainment.		
Otoe County		Unclassifiable/Attainment.		
Pawnee County		Unclassifiable/Attainment.		
Perkins County		Unclassifiable/Attainment.		
Phelps County		Unclassifiable/Attainment.		
Pierce County		Unclassifiable/Attainment.		
Platte County		Unclassifiable/Attainment.		
Polk County		Unclassifiable/Attainment.		
Red Willow County		Unclassifiable/Attainment.		
Richardson County		Unclassifiable/Attainment.		
Rock County		Unclassifiable/Attainment.		
Saline County		Unclassifiable/Attainment.		
Sarpy County		Unclassifiable/Attainment.		
Saunders County		Unclassifiable/Attainment.		
Scotts Bluff County		Unclassifiable/Attainment.		
Seward County		Unclassifiable/Attainment.		
Sheridan County		Unclassifiable/Attainment.		
Sherman County		Unclassifiable/Attainment.		
Sioux County		Unclassifiable/Attainment.		
Stanton County		Unclassifiable/Attainment.		
Thayer County		Unclassifiable/Attainment.		
Thomas County		Unclassifiable/Attainment.		
Thurston County		Unclassifiable/Attainment.		
Valley County		Unclassifiable/Attainment.		
Washington County		Unclassifiable/Attainment.		
Wayne County		Unclassifiable/Attainment.		
Webster County		Unclassifiable/Attainment.		
Wheeler County		Unclassifiable/Attainment.		
York County		Unclassifiable/Attainment.		

[a] Includes Indian Country located in each county or area, except as otherwise specified.
[1] This date is 90 days after January 5, 2005, unless otherwise noted.

NEBRASKA—2006 24-HOUR $PM_{2.5}$ NAAQS

[Primary and secondary]

Designated area	Designation [a]		Classification	
	Date [1]	Type	Date	Type
Statewide:				
Adams County		Unclassifiable/Attainment.		
Antelope County		Unclassifiable/Attainment.		
Arthur County		Unclassifiable/Attainment.		
Banner County		Unclassifiable/Attainment.		
Blaine County		Unclassifiable/Attainment.		
Boone County		Unclassifiable/Attainment.		
Box Butte County		Unclassifiable/Attainment.		
Boyd County		Unclassifiable/Attainment.		
Brown County		Unclassifiable/Attainment.		
Buffalo County		Unclassifiable/Attainment.		
Burt County		Unclassifiable/Attainment.		
Butler County		Unclassifiable/Attainment.		
Cass County		Unclassifiable/Attainment.		
Cedar County		Unclassifiable/Attainment.		
Chase County		Unclassifiable/Attainment.		
Cherry County		Unclassifiable/Attainment.		
Cheyenne County		Unclassifiable/Attainment.		
Clay County		Unclassifiable/Attainment.		
Colfax County		Unclassifiable/Attainment.		
Cuming County		Unclassifiable/Attainment.		
Custer County		Unclassifiable/Attainment.		
Dakota County		Unclassifiable/Attainment.		
Dawes County		Unclassifiable/Attainment.		
Dawson County		Unclassifiable/Attainment.		
Deuel County		Unclassifiable/Attainment.		
Dixon County		Unclassifiable/Attainment.		
Dodge County		Unclassifiable/Attainment.		
Douglas County		Unclassifiable/Attainment.		
Dundy County		Unclassifiable/Attainment.		
Fillmore County		Unclassifiable/Attainment.		
Franklin County		Unclassifiable/Attainment.		
Frontier County		Unclassifiable/Attainment.		
Furnas County		Unclassifiable/Attainment.		
Gage County		Unclassifiable/Attainment.		
Garden County		Unclassifiable/Attainment.		
Garfield County		Unclassifiable/Attainment.		
Gosper County		Unclassifiable/Attainment.		
Grant County		Unclassifiable/Attainment.		
Greeley County		Unclassifiable/Attainment.		
Hall County		Unclassifiable/Attainment.		
Hamilton County		Unclassifiable/Attainment.		
Harlan County		Unclassifiable/Attainment.		
Hayes County		Unclassifiable/Attainment.		
Hitchcock County		Unclassifiable/Attainment.		
Holt County		Unclassifiable/Attainment.		
Hooker County		Unclassifiable/Attainment.		
Howard County		Unclassifiable/Attainment.		
Jefferson County		Unclassifiable/Attainment.		
Johnson County		Unclassifiable/Attainment.		
Kearney County		Unclassifiable/Attainment.		
Keith County		Unclassifiable/Attainment.		
Keya Paha County		Unclassifiable/Attainment.		
Kimball County		Unclassifiable/Attainment.		
Knox County		Unclassifiable/Attainment.		
Lancaster County		Unclassifiable/Attainment.		
Lincoln County		Unclassifiable/Attainment.		
Logan County		Unclassifiable/Attainment.		
Loup County		Unclassifiable/Attainment.		
McPherson County		Unclassifiable/Attainment.		
Madison County		Unclassifiable/Attainment.		
Merrick County		Unclassifiable/Attainment.		
Morrill County		Unclassifiable/Attainment.		
Nance County		Unclassifiable/Attainment.		
Nemaha County		Unclassifiable/Attainment.		
Nuckolls County		Unclassifiable/Attainment.		
Otoe County		Unclassifiable/Attainment.		
Pawnee County		Unclassifiable/Attainment.		
Perkins County		Unclassifiable/Attainment.		

NEBRASKA—2006 24-HOUR $PM_{2.5}$ NAAQS—Continued

[Primary and secondary]

Designated area	Designation [a]		Classification	
	Date [1]	Type	Date	Type
Phelps County		Unclassifiable/Attainment.		
Pierce County		Unclassifiable/Attainment.		
Platte County		Unclassifiable/Attainment.		
Polk County		Unclassifiable/Attainment.		
Red Willow County		Unclassifiable/Attainment.		
Richardson County		Unclassifiable/Attainment.		
Rock County		Unclassifiable/Attainment.		
Saline County		Unclassifiable/Attainment.		
Sarpy County		Unclassifiable/Attainment.		
Saunders County		Unclassifiable/Attainment.		
Scotts Bluff County		Unclassifiable/Attainment.		
Seward County		Unclassifiable/Attainment.		
Sheridan County		Unclassifiable/Attainment.		
Sherman County		Unclassifiable/Attainment.		
Sioux County		Unclassifiable/Attainment.		
Stanton County		Unclassifiable/Attainment.		
Thayer County		Unclassifiable/Attainment.		
Thomas County		Unclassifiable/Attainment.		
Thurston County		Unclassifiable/Attainment.		
Valley County		Unclassifiable/Attainment.		
Washington County		Unclassifiable/Attainment.		
Wayne County		Unclassifiable/Attainment.		
Webster County		Unclassifiable/Attainment.		
Wheeler County		Unclassifiable/Attainment.		
York County		Unclassifiable/Attainment.		

[a] Includes Indian Country located in each county or area, except as otherwise specified.
[1] This date is 30 days after November 13, 2009, unless otherwise noted.

* * * * *

■ 30. Section 81.329 is amended as follows:

■ a. By removing the tables titled ''Nevada—$PM_{2.5}$ (Annual NAAQS)'' and ''Nevada—$PM_{2.5}$ [24-hour NAAQS]''.

■ b. By adding three tables titled ''Nevada—1997 Annual $PM_{2.5}$ NAAQS (Primary and Secondary)'' and ''Nevada—1997 24-hour $PM_{2.5}$ NAAQS (Primary and Secondary)'' and ''Nevada—2006 24-hour $PM_{2.5}$ NAAQS (Primary and Secondary)'' before the table titled ''Nevada—NO_2 (1971 Annual Standard)''.

The additions read as follows:

§ 81.329 Nevada.

* * * * *

NEVADA—1997 ANNUAL $PM_{2.5}$ NAAQS

[Primary and secondary]

Designated area	Designation [a]		Classification	
	Date [1]	Type	Date	Type
Statewide [2]		Unclassifiable/Attainment.		

[a] Includes Indian Country located in each county or area, except as otherwise specified.
[1] This date is 90 days after January 5, 2005, unless otherwise noted.
[2] Statewide refers to hydrographic areas as shown on the State of Nevada Division of Water Resources' map titled "Water Resources and Inter-basin Flows" (September 1971), as revised to include a division of Carson Desert (area 101) into two areas, a smaller area 101 and area 101A, and a division of Boulder Flat (area 61) into an Upper Unit 61 and a Lower Unit 61. See also 67 FR 12474 (March 19, 2002).

NEVADA—1997 24-HOUR $PM_{2.5}$ NAAQS

[Primary and secondary]

Designated area	Designation [a]		Classification	
	Date [1]	Type	Date	Type
Statewide [2]		Unclassifiable/Attainment.		

[a] Includes Indian Country located in each county or area, except as otherwise specified.
[1] This date is 90 days after January 5, 2005, unless otherwise noted.
[2] Statewide refers to hydrographic areas as shown on the State of Nevada Division of Water Resources' map titled "Water Resources and Inter-basin Flows" (September 1971), as revised to include a division of Carson Desert (area 101) into two areas, a smaller area 101 and area 101A, and a division of Boulder Flat (area 61) into an Upper Unit 61 and a Lower Unit 61. See also 67 FR 12474 (March 19, 2002).

NEVADA—2006 24-HOUR $PM_{2.5}$ NAAQS

[Primary and secondary]

Designated area	Designation [a]		Classification	
	Date [1]	Type	Date	Type
Statewide [2]		Unclassifiable/Attainment.		

[a] Includes Indian Country located in each county or area, except as otherwise specified.
[1] This date is 30 days after November 13, 2009, unless otherwise noted.
[2] Statewide refers to hydrographic areas as shown on the State of Nevada Division of Water Resources' map titled "Water Resources and Inter-basin Flows" (September 1971), as revised to include a division of Carson Desert (area 101) into two areas, a smaller area 101 and area 101A, and a division of Boulder Flat (area 61) into an Upper Unit 61 and a Lower Unit 61. See also 67 FR 12474 (March 19, 2002).

* * * * *

■ 31. Section 81.330 is amended as follows:

■ a. By removing the tables titled "New Hampshire—$PM_{2.5}$ (Annual NAAQS)" and "New Hampshire—$PM_{2.5}$ [24-hour NAAQS]".

■ b. By adding three tables titled "New Hampshire—1997 Annual $PM_{2.5}$ NAAQS (Primary and Secondary)" and "New Hampshire—1997 24-hour $PM_{2.5}$ NAAQS (Primary and Secondary)" and "New Hampshire—2006 24-hour $PM_{2.5}$ NAAQS (Primary and Secondary)" before the table titled "New Hampshire—NO_2 (1971 Annual Standard)".

The additions read as follows:

§ 81.330 New Hampshire.

* * * * *

NEW HAMPSHIRE—1997 ANNUAL $PM_{2.5}$ NAAQS

[Primary and secondary]

Designated area	Designation [a]		Classification	
	Date [1]	Type	Date	Type
Statewide:				
Belknap County		Unclassifiable/Attainment.		
Carroll County		Unclassifiable/Attainment.		
Cheshire County		Unclassifiable/Attainment.		
Coos County		Unclassifiable/Attainment.		
Grafton County		Unclassifiable/Attainment.		
Hillsborough County		Unclassifiable/Attainment.		
Merrimack County		Unclassifiable/Attainment.		
Rockingham County		Unclassifiable/Attainment.		
Strafford County		Unclassifiable/Attainment.		
Sullivan County		Unclassifiable/Attainment.		

[a] Includes Indian Country located in each county or area, except as otherwise specified.
[1] This date is 90 days after January 5, 2005, unless otherwise noted.

NEW HAMPSHIRE—1997 24-HOUR $PM_{2.5}$ NAAQS

[Primary and secondary]

Designated area	Designation [a]		Classification	
	Date [1]	Type	Date	Type
Statewide:				
Belknap County		Unclassifiable/Attainment.		
Carroll County		Unclassifiable/Attainment.		
Cheshire County		Unclassifiable/Attainment.		
Coos County		Unclassifiable/Attainment.		
Grafton County		Unclassifiable/Attainment.		
Hillsborough County		Unclassifiable/Attainment.		
Merrimack County		Unclassifiable/Attainment.		
Rockingham County		Unclassifiable/Attainment.		
Strafford County		Unclassifiable/Attainment.		
Sullivan County		Unclassifiable/Attainment.		

[a] Includes Indian Country located in each county or area, except as otherwise specified.
[1] This date is 90 days after January 5, 2005, unless otherwise noted.

NEW HAMPSHIRE—2006 24-HOUR $PM_{2.5}$ NAAQS

[Primary and secondary]

Designated area	Designation [a]		Classification	
	Date [1]	Type	Date	Type
Statewide:				

NEW HAMPSHIRE—2006 24-HOUR $PM_{2.5}$ NAAQS—Continued

[Primary and secondary]

Designated area	Designation [a]		Classification	
	Date [1]	Type	Date	Type
Belknap County		Unclassifiable/Attainment.		
Carroll County		Unclassifiable/Attainment.		
Cheshire County		Unclassifiable/Attainment.		
Coos County		Unclassifiable/Attainment.		
Grafton County		Unclassifiable/Attainment.		
Hillsborough County		Unclassifiable/Attainment.		
Merrimack County		Unclassifiable/Attainment.		
Rockingham County		Unclassifiable/Attainment.		
Strafford County		Unclassifiable/Attainment.		
Sullivan County		Unclassifiable/Attainment.		

[a] Includes Indian Country located in each county or area, except as otherwise specified.
[1] This date is 30 days after November 13, 2009, unless otherwise noted.

* * * * *

■ 32. Section 81.331 is amended as follows:

■ a. By removing the tables titled ''New Jersey—$PM_{2.5}$ (Annual NAAQS)'' and ''New Jersey—$PM_{2.5}$ [24-hour NAAQS]''.

■ b. By adding three tables titled ''New Jersey—1997 Annual $PM_{2.5}$ NAAQS (Primary and Secondary)'' and ''New Jersey—1997 24-hour $PM_{2.5}$ NAAQS (Primary and Secondary)'' and ''New Jersey—2006 24-hour $PM_{2.5}$ NAAQS (Primary and Secondary)'' before the table titled ''New Jersey—NO_2 (1971 Annual Standard)''.

The additions read as follows:

§ 81.331 New Jersey.

* * * * *

NEW JERSEY—1997 ANNUAL $PM_{2.5}$ NAAQS

[Primary and secondary]

Designated area	Designation [a]		Classification	
	Date [1]	Type	Date	Type
New York-N. New Jersey-Long Island, NY–NJ–CT:				
Bergen County	9/4/13	Attainment.		
Essex County	9/4/13	Attainment.		
Hudson County	9/4/13	Attainment.		
Mercer County	9/4/13	Attainment.		
Middlesex County	9/4/13	Attainment.		
Monmouth County	9/4/13	Attainment.		
Morris County	9/4/13	Attainment.		
Passaic County	9/4/13	Attainment.		
Somerset County	9/4/13	Attainment.		
Union County	9/4/13	Attainment.		
Philadelphia-Wilmington, PA–NJ–DE:				
Burlington County	9/4/13	Attainment.		
Camden County	9/4/13	Attainment.		
Gloucester County	9/4/13	Attainment.		
New York-N. New Jersey-Long Island, NY–NJ–CT:				
Hunterdon County		Unclassifiable/Attainment.		
Sussex County		Unclassifiable/Attainment.		
Warren County		Unclassifiable/Attainment.		
Atlantic City, NJ:				
Atlantic County		Unclassifiable/Attainment.		
Cape May County		Unclassifiable/Attainment.		
Cumberland County		Unclassifiable/Attainment.		
Ocean County		Unclassifiable/Attainment.		
Salem County		Unclassifiable/Attainment.		

[a] Includes Indian Country located in each county or area, except as otherwise specified.
[1] This date is 90 days after January 5, 2005, unless otherwise noted.

NEW JERSEY—1997 24-HOUR $PM_{2.5}$ NAAQS

[Primary and secondary]

Designated area	Designation [a]		Classification	
	Date [1]	Type	Date	Type
New York-N. New Jersey-Long Island, NY–NJ–CT:				
Bergen County		Unclassifiable/Attainment.		
Essex County		Unclassifiable/Attainment.		

NEW JERSEY—1997 24-HOUR $PM_{2.5}$ NAAQS—Continued

[Primary and secondary]

Designated area	Designation [a]		Classification	
	Date [1]	Type	Date	Type
Hudson County		Unclassifiable/Attainment.		
Hunterdon County		Unclassifiable/Attainment.		
Mercer County		Unclassifiable/Attainment.		
Middlesex County		Unclassifiable/Attainment.		
Monmouth County		Unclassifiable/Attainment.		
Morris County		Unclassifiable/Attainment.		
Passaic County		Unclassifiable/Attainment.		
Somerset County		Unclassifiable/Attainment.		
Sussex County		Unclassifiable/Attainment.		
Union County		Unclassifiable/Attainment.		
Warren County		Unclassifiable/Attainment.		
Philadelphia-Wilmington, PA–NJ–DE:				
Burlington County		Unclassifiable/Attainment.		
Camden County		Unclassifiable/Attainment.		
Gloucester County		Unclassifiable/Attainment.		
Rest of State:				
Atlantic City, NJ:				
Atlantic County		Unclassifiable/Attainment.		
Cape May County		Unclassifiable/Attainment.		
Cumberland County		Unclassifiable/Attainment.		
Ocean County		Unclassifiable/Attainment.		
Salem County		Unclassifiable/Attainment.		

[a] Includes Indian Country located in each county or area, except as otherwise specified.
[1] This date is 90 days after January 5, 2005, unless otherwise noted.

NEW JERSEY—2006 24-HOUR $PM_{2.5}$ NAAQS

[Primary and secondary]

Designated area	Designation [a]		Classification	
	Date [1]	Type	Date	Type
New York-N. New Jersey-Long Island, NY–NJ–CT:				
Bergen County	9/4/13	Attainment.		
Essex County	9/4/13	Attainment.		
Hudson County	9/4/13	Attainment.		
Mercer County	9/4/13	Attainment.		
Middlesex County	9/4/13	Attainment.		
Monmouth County	9/4/13	Attainment.		
Morris County	9/4/13	Attainment.		
Passaic County	9/4/13	Attainment.		
Somerset County	9/4/13	Attainment.		
Union County	9/4/13	Attainment.		
Philadelphia-Wilmington, PA–NJ–DE:				
Burlington County	9/4/13	Attainment.		
Camden County	9/4/13	Attainment.		
Gloucester County	9/4/13	Attainment.		
Rest of State:				
New York-N. New Jersey-Long Island, NY–NJ–CT:				
Hunterdon County		Unclassifiable/Attainment.		
Sussex County		Unclassifiable/Attainment.		
Warren County		Unclassifiable/Attainment.		
Atlantic City, NJ:				
Atlantic County		Unclassifiable/Attainment.		
Cape May County		Unclassifiable/Attainment.		
Cumberland County		Unclassifiable/Attainment.		
Ocean County		Unclassifiable/Attainment.		
Salem County		Unclassifiable/Attainment.		

[a] Includes Indian Country located in each county or area, except as otherwise specified.
[1] This date is 30 days after November 13, 2009, unless otherwise noted.

* * * * *

■ 33. Section 81.332 is amended as follows:

■ a. By removing the tables titled ''New Mexico—$PM_{2.5}$ (Annual NAAQS)'' and ''New Mexico—$PM_{2.5}$ [24-hour NAAQS]''.

■ b. By adding three tables titled ''New Mexico—1997 Annual $PM_{2.5}$ NAAQS (Primary and Secondary)'' and ''New Mexico—1997 24-hour $PM_{2.5}$ NAAQS

(Primary and Secondary)'' and ''New Mexico—2006 24-hour $PM_{2.5}$ NAAQS (Primary and Secondary)'' before the table titled ''New Mexico—NO_2 (1971 Annual Standard)''.

The additions read as follows:

§ 81.332 New Mexico.

* * * * *

NEW MEXICO—1997 ANNUAL $PM_{2.5}$ NAAQS

[Primary and secondary]

Designated area	Designation [a]		Classification	
	Date [1]	Type	Date [1]	Type
AQCR 012 New Mexico-Southern Border Intrastate:				
Grant County		Unclassifiable/Attainment.		
Hidalgo County		Unclassifiable/Attainment.		
Luna County		Unclassifiable/Attainment.		
AQCR 014 Four Corners Interstate (see 40 CFR 81.121):				
McKinley County (part)		Unclassifiable/Attainment.		
Río Arriba County (part)		Unclassifiable/Attainment.		
Sandoval County (part)		Unclassifiable/Attainment.		
San Juan County		Unclassifiable/Attainment.		
Valencia County (part)		Unclassifiable/Attainment.		
AQCR 152 Albuquerque-Mid Rio Grande Intrastate:				
Bernalillo County		Unclassifiable/Attainment.		
Sandoval County (part) see 40 CFR 81.83		Unclassifiable/Attainment.		
Valencia County (part) see 40 CFR 81.83		Unclassifiable/Attainment.		
AQCR 153 El Paso-Las Cruces-Alamogordo:				
Doña Ana County (part)		Unclassifiable/Attainment.		
(Sunland Park Area) The area bounded by the New Mexico-Texas State line on the east, New Mexico-Mexico international line on the south, the range 3E-Range 2E line on the west, and the N3200 latitude line on the north.				
Doña Ana County (remainder)		Unclassifiable/Attainment.		
Lincoln County		Unclassifiable/Attainment.		
Otero County		Unclassifiable/Attainment.		
Sierra County		Unclassifiable/Attainment.		
AQCR 154 Northeastern Plains Intrastate:				
Colfax County		Unclassifiable/Attainment.		
Guadalupe County		Unclassifiable/Attainment.		
Harding County		Unclassifiable/Attainment.		
Mora County		Unclassifiable/Attainment.		
San Miguel County		Unclassifiable/Attainment.		
Torrance County		Unclassifiable/Attainment.		
Union County		Unclassifiable/Attainment.		
AQCR 155 Pecos-Permian Basin Intrastate:				
Chaves County		Unclassifiable/Attainment.		
Curry County		Unclassifiable/Attainment.		
De Baca County		Unclassifiable/Attainment.		
Eddy County		Unclassifiable/Attainment.		
Lea County		Unclassifiable/Attainment.		
Quay County		Unclassifiable/Attainment.		
Roosevelt County		Unclassifiable/Attainment.		
AQCR 156 SW Mountains-Augustine Plains:				
Catron County		Unclassifiable/Attainment.		
Cibola County		Unclassifiable/Attainment.		
McKinley County (part) see 40 CFR 81.241		Unclassifiable/Attainment.		
Socorro County		Unclassifiable/Attainment.		
Valencia County (part) see 40 CFR 81.241		Unclassifiable/Attainment.		
AQCR 157 Upper Rio Grande Valley Intrastate:				
Los Alamos County		Unclassifiable/Attainment.		
Río Arriba County (part) see 40 CFR 81.239		Unclassifiable/Attainment.		
Santa Fe County		Unclassifiable/Attainment.		
Taos County		Unclassifiable/Attainment.		

[a] Includes Indian Country located in each county or area, except as otherwise specified.
[1] This date is 90 days after January 5, 2005, unless otherwise noted.

NEW MEXICO—1997 24-HOUR $PM_{2.5}$ NAAQS

[Primary and secondary]

Designated area	Designation[a]		Classification	
	Date[1]	Type	Date[1]	Type
AQCR 222 New Mexico-Southern Border Intrastate:				
Grant County		Unclassifiable/Attainment.		

NEW MEXICO—1997 24-HOUR $PM_{2.5}$ NAAQS—Continued

[Primary and secondary]

Designated area	Designation[a]		Classification	
	Date[1]	Type	Date[1]	Type
Hidalgo County		Unclassifiable/Attainment.		
Luna County		Unclassifiable/Attainment.		
AQCR 224 Four Corners Interstate (see 40 CFR 81.121):				
McKinley County (part)		Unclassifiable/Attainment.		
Río Arriba County (part)		Unclassifiable/Attainment.		
Sandoval County (part)		Unclassifiable/Attainment.		
San Juan County		Unclassifiable/Attainment.		
Valencia County (part)		Unclassifiable/Attainment.		
AQCR 152 Albuquerque-Mid Rio Grande Intrastate:				
Bernalillo County		Unclassifiable/Attainment.		
Sandoval County (part) see 40 CFR 81.83		Unclassifiable/Attainment.		
Valencia County (part) see 40 CFR 81.83		Unclassifiable/Attainment.		
AQCR 153 El Paso-Las Cruces-Alamogordo:				
Doña Ana County (part)		Unclassifiable/Attainment.		
(Sunland Park Area) The area bounded by the New Mexico-Texas State line on the east, New Mexico-Mexico international line on the south, the range 3E-Range 2E line on the west, and the N3200 latitude line on the north.				
Doña Ana County (remainder)		Unclassifiable/Attainment.		
Lincoln County		Unclassifiable/Attainment.		
Otero County		Unclassifiable/Attainment.		
Sierra County		Unclassifiable/Attainment.		
AQCR 154 Northeastern Plains Intrastate:				
Colfax County		Unclassifiable/Attainment.		
Guadalupe County		Unclassifiable/Attainment.		
Harding County		Unclassifiable/Attainment.		
Mora County		Unclassifiable/Attainment.		
San Miguel County		Unclassifiable/Attainment.		
Torrance County		Unclassifiable/Attainment.		
Union County		Unclassifiable/Attainment.		
AQCR 155 Pecos-Permian Basin Intrastate:				
Chaves County		Unclassifiable/Attainment.		
Curry County		Unclassifiable/Attainment.		
De Baca County		Unclassifiable/Attainment.		
Eddy County		Unclassifiable/Attainment.		
Lea County		Unclassifiable/Attainment.		
Quay County		Unclassifiable/Attainment.		
Roosevelt County		Unclassifiable/Attainment.		
AQCR 156 SW Mountains-Augustine Plains:				
Catron County		Unclassifiable/Attainment.		
Cibola County		Unclassifiable/Attainment.		
McKinley County (part) see 40 CFR 81.241		Unclassifiable/Attainment.		
Socorro County		Unclassifiable/Attainment.		
Valencia County (part) see 40 CFR 81.241		Unclassifiable/Attainment.		
AQCR 157 Upper Rio Grande Valley Intrastate:				
Los Alamos County		Unclassifiable/Attainment.		
Río Arriba County (part) see 40 CFR 81.239		Unclassifiable/Attainment.		
Santa Fe County		Unclassifiable/Attainment.		
Taos County		Unclassifiable/Attainment.		

[a] Includes Indian Country located in each county or area, except as otherwise specified.
[1] This date is 90 days after January 5, 2005, unless otherwise noted.

NEW MEXICO—2006 24-HOUR $PM_{2.5}$ NAAQS

[Primary and secondary]

Designated area	Designation[a]		Classification	
	Date[1]	Type	Date[1]	Type
AQCR 222 New Mexico-Southern Border Intrastate:				
Grant County		Unclassifiable/Attainment.		
Hidalgo County		Unclassifiable/Attainment.		
Luna County		Unclassifiable/Attainment.		
AQCR 224 Four Corners Interstate (see 40 CFR 81.121):				
McKinley County (part)		Unclassifiable/Attainment.		
Río Arriba County (part)		Unclassifiable/Attainment.		
Sandoval County (part)		Unclassifiable/Attainment.		

NEW MEXICO—2006 24-HOUR $PM_{2.5}$ NAAQS—Continued

[Primary and secondary]

Designated area	Designation[a]		Classification	
	Date[1]	Type	Date[1]	Type
San Juan County		Unclassifiable/Attainment.		
Valencia County (part)		Unclassifiable/Attainment.		
AQCR 152 Albuquerque-Mid Rio Grande Intrastate:				
Bernalillo County		Unclassifiable/Attainment.		
Sandoval County (part) see 40 CFR 81.83		Unclassifiable/Attainment.		
Valencia County (part) see 40 CFR 81.83		Unclassifiable/Attainment.		
AQCR 153 El Paso-Las Cruces-Alamogordo:				
Doña Ana County (part)		Unclassifiable/Attainment.		
(Sunland Park Area) The area bounded by the New Mexico-Texas State line on the east, New Mexico-Mexico international line on the south, the range 3E-Range 2E line on the west, and the N3200 latitude line on the north.				
Doña Ana County (remainder)		Unclassifiable/Attainment.		
Lincoln County		Unclassifiable/Attainment.		
Otero County		Unclassifiable/Attainment.		
Sierra County		Unclassifiable/Attainment.		
AQCR 154 Northeastern Plains Intrastate:				
Colfax County		Unclassifiable/Attainment.		
Guadalupe County		Unclassifiable/Attainment.		
Harding County		Unclassifiable/Attainment.		
Mora County		Unclassifiable/Attainment.		
San Miguel County		Unclassifiable/Attainment.		
Torrance County		Unclassifiable/Attainment.		
Union County		Unclassifiable/Attainment.		
AQCR 155 Pecos-Permian Basin Intrastate:				
Chaves County		Unclassifiable/Attainment.		
Curry County		Unclassifiable/Attainment.		
De Baca County		Unclassifiable/Attainment.		
Eddy County		Unclassifiable/Attainment.		
Lea County		Unclassifiable/Attainment.		
Quay County		Unclassifiable/Attainment.		
Roosevelt County		Unclassifiable/Attainment.		
AQCR 156 SW Mountains-Augustine Plains:				
Catron County		Unclassifiable/Attainment.		
Cibola County		Unclassifiable/Attainment.		
McKinley County (part) see 40 CFR 81.241		Unclassifiable/Attainment.		
Socorro County		Unclassifiable/Attainment.		
Valencia County (part) see 40 CFR 81.241		Unclassifiable/Attainment.		
AQCR 157 Upper Rio Grande Valley Intrastate:				
Los Alamos County		Unclassifiable/Attainment.		
Río Arriba County (part) see 40 CFR 81.239		Unclassifiable/Attainment.		
Santa Fe County		Unclassifiable/Attainment.		
Taos County		Unclassifiable/Attainment.		

[a] Includes Indian Country located in each county or area, except as otherwise specified.
[1] This date is 30 days after November 13, 2009, unless otherwise noted.

* * * * *

■ 34. Section 81.333 is amended as follows:

■ a. By removing the tables titled ''New York—$PM_{2.5}$ (Annual NAAQS)'' and ''New York—$PM_{2.5}$ [24-hour NAAQS]''.

■ b. By adding three tables titled ''New York—1997 Annual $PM_{2.5}$ NAAQS (Primary and Secondary)'' and ''New York—1997 24-hour $PM_{2.5}$ NAAQS (Primary and Secondary)'' and ''New York—2006 24-hour $PM_{2.5}$ NAAQS (Primary and Secondary)'' before the table titled ''New York—NO_2 (1971 Annual Standard)''.

The additions read as follows:

§ 81.333 New York.

* * * * *

NEW YORK—1997 ANNUAL $PM_{2.5}$ NAAQS

[Primary and secondary]

Designated area	Designation[a]		Classification	
	Date[1]	Type	Date[1]	Type
New York-N. New Jersey-Long Island, NY–NJ–CT:				
Bronx County		Nonattainment		Moderate.
Kings County		Nonattainment		Moderate.
Nassau County		Nonattainment		Moderate.

NEW YORK—1997 ANNUAL $PM_{2.5}$ NAAQS—Continued

[Primary and secondary]

Designated area	Designation [a]		Classification	
	Date [1]	Type	Date [1]	Type
New York County		Nonattainment		Moderate.
Orange County		Nonattainment		Moderate.
Queens County		Nonattainment		Moderate.
Richmond County		Nonattainment		Moderate.
Rockland County		Nonattainment		Moderate.
Suffolk County		Nonattainment		Moderate.
Westchester County		Nonattainment		Moderate.
AQCR 158 Central New York Intrastate (remainder of):				
Cortland County		Unclassifiable/Attainment.		
Herkimer County		Unclassifiable/Attainment.		
Lewis County		Unclassifiable/Attainment.		
Oneida County		Unclassifiable/Attainment.		
AQCR 159 Champlain Valley Interstate (remainder of):				
Clinton County		Unclassifiable/Attainment.		
Franklin County		Unclassifiable/Attainment.		
Hamilton County		Unclassifiable/Attainment.		
St. Lawrence County		Unclassifiable/Attainment.		
Warren County		Unclassifiable/Attainment.		
Washington County		Unclassifiable/Attainment.		
AQCR 160 Finger Lake Intrastate:				
Seneca County		Unclassifiable/Attainment.		
Wyoming County		Unclassifiable/Attainment.		
Yates County		Unclassifiable/Attainment.		
AQCR 161 Hudson Valley Intrastate (remainder of):				
Columbia County		Unclassifiable/Attainment.		
Fulton County		Unclassifiable/Attainment.		
Ulster County		Unclassifiable/Attainment.		
AQCR 163 Southern Tier East Intrastate:				
Broome County		Unclassifiable/Attainment.		
Chenango County		Unclassifiable/Attainment.		
Delaware County		Unclassifiable/Attainment.		
Otsego County		Unclassifiable/Attainment.		
Sullivan County		Unclassifiable/Attainment.		
Tioga County		Unclassifiable/Attainment.		
AQCR 164 Southern Tier West Intrastate:				
Allegany County		Unclassifiable/Attainment.		
Cattaraugus County		Unclassifiable/Attainment.		
Chemung County		Unclassifiable/Attainment.		
Schuyler County		Unclassifiable/Attainment.		
Steuben County		Unclassifiable/Attainment.		
Tompkins County		Unclassifiable/Attainment.		
Albany-Schenectady-Troy, NY:				
Albany County		Unclassifiable/Attainment.		
Greene County		Unclassifiable/Attainment.		
Montgomery County		Unclassifiable/Attainment.		
Rensselaer County		Unclassifiable/Attainment.		
Saratoga County		Unclassifiable/Attainment.		
Schenectady County		Unclassifiable/Attainment.		
Schoharie County		Unclassifiable/Attainment.		
Buffalo-Niagara Falls, NY:				
Erie County		Unclassifiable/Attainment.		
Niagara County		Unclassifiable/Attainment.		
Essex County, NY:				
Essex County		Unclassifiable/Attainment.		
Jamestown, NY:				
Chautauqua County		Unclassifiable/Attainment.		
Jefferson County, NY:				
Jefferson County		Unclassifiable/Attainment.		
Poughkeepsie, NY:				
Dutchess County		Unclassifiable/Attainment.		
Putnam County		Unclassifiable/Attainment.		
Rochester, NY:				
Genesee County		Unclassifiable/Attainment.		
Livingston County				
Monroe County		Unclassifiable/Attainment.		
Ontario County		Unclassifiable/Attainment.		
Orleans County		Unclassifiable/Attainment.		
Wayne County		Unclassifiable/Attainment.		
Syracuse, NY:				

NEW YORK—1997 ANNUAL $PM_{2.5}$ NAAQS—Continued

[Primary and secondary]

Designated area	Designation [a]		Classification	
	Date [1]	Type	Date [1]	Type
Cayuga County		Unclassifiable/Attainment.		
Madison County		Unclassifiable/Attainment.		
Onondaga County		Unclassifiable/Attainment.		
Oswego County		Unclassifiable/Attainment.		

[a] Includes Indian Country located in each county or area, except as otherwise specified.
[1] This date is 90 days after January 5, 2005, unless otherwise noted.
[2] This date is July 2, 2014, unless otherwise noted.

NEW YORK—1997 24-HOUR $PM_{2.5}$ NAAQS

[Primary and secondary]

Designated area	Designation [a]		Classification	
	Date [1]	Type	Date [1]	Type
New York-N. New Jersey-Long Island, NY–NJ–CT:				
Bronx County		Unclassifiable/Attainment.		
Kings County		Unclassifiable/Attainment.		
Nassau County		Unclassifiable/Attainment.		
New York County		Unclassifiable/Attainment.		
Orange County		Unclassifiable/Attainment.		
Queens County		Unclassifiable/Attainment.		
Richmond County		Unclassifiable/Attainment.		
Rockland County		Unclassifiable/Attainment.		
Suffolk County		Unclassifiable/Attainment.		
Westchester County		Unclassifiable/Attainment.		
Rest of State:				
AQCR 158 Central New York Intrastate (remainder of):				
Cortland County		Unclassifiable/Attainment.		
Herkimer County		Unclassifiable/Attainment.		
Lewis County		Unclassifiable/Attainment.		
Oneida County		Unclassifiable/Attainment.		
AQCR 159 Champlain Valley Interstate (remainder of):				
Clinton County		Unclassifiable/Attainment.		
Franklin County		Unclassifiable/Attainment.		
Hamilton County		Unclassifiable/Attainment.		
St. Lawrence County		Unclassifiable/Attainment.		
Warren County		Unclassifiable/Attainment.		
Washington County		Unclassifiable/Attainment.		
AQCR 160 Finger Lake Intrastate:				
Seneca County		Unclassifiable/Attainment.		
Wyoming County		Unclassifiable/Attainment.		
Yates County		Unclassifiable/Attainment.		
AQCR 161 Hudson Valley Intrastate (remainder of):				
Columbia County		Unclassifiable/Attainment.		
Fulton County		Unclassifiable/Attainment.		
Ulster County		Unclassifiable/Attainment.		
AQCR 163 Southern Tier East Intrastate:				
Broome County		Unclassifiable/Attainment.		
Chenango County		Unclassifiable/Attainment.		
Delaware County		Unclassifiable/Attainment.		
Otsego County		Unclassifiable/Attainment.		
Sullivan County		Unclassifiable/Attainment.		
Tioga County		Unclassifiable/Attainment.		
AQCR 164 Southern Tier West Intrastate:				
Allegany County		Unclassifiable/Attainment.		
Cattaraugus County		Unclassifiable/Attainment.		
Chemung County		Unclassifiable/Attainment.		
Schuyler County		Unclassifiable/Attainment.		
Steuben County		Unclassifiable/Attainment.		
Tompkins County		Unclassifiable/Attainment.		
Albany-Schenectady-Troy, NY:				
Albany County		Unclassifiable/Attainment.		
Greene County		Unclassifiable/Attainment.		
Montgomery County		Unclassifiable/Attainment.		
Rensselaer County		Unclassifiable/Attainment.		
Saratoga County		Unclassifiable/Attainment.		
Schenectady County		Unclassifiable/Attainment.		

NEW YORK—1997 24-HOUR $PM_{2.5}$ NAAQS—Continued

[Primary and secondary]

Designated area	Designation [a]		Classification	
	Date [1]	Type	Date [1]	Type
Schoharie County		Unclassifiable/Attainment.		
Buffalo-Niagara Falls, NY:				
Erie County		Unclassifiable/Attainment.		
Niagara County		Unclassifiable/Attainment.		
Essex County, NY:				
Essex County		Unclassifiable/Attainment.		
Jamestown, NY:				
Chautauqua County		Unclassifiable/Attainment.		
Jefferson County, NY:				
Jefferson County		Unclassifiable/Attainment.		
Poughkeepsie, NY:				
Dutchess County		Unclassifiable/Attainment.		
Putnam County		Unclassifiable/Attainment.		
Rochester, NY:				
Genesee County		Unclassifiable/Attainment.		
Livingston County		Unclassifiable/Attainment.		
Monroe County		Unclassifiable/Attainment.		
Ontario County		Unclassifiable/Attainment.		
Orleans County		Unclassifiable/Attainment.		
Wayne County		Unclassifiable/Attainment.		
Syracuse, NY:				
Cayuga County		Unclassifiable/Attainment.		
Madison County		Unclassifiable/Attainment.		
Onondaga County		Unclassifiable/Attainment.		
Oswego County		Unclassifiable/Attainment.		

[a] Includes Indian Country located in each county or area, except as otherwise specified.
[1] This date is 90 days after January 5, 2005, unless otherwise noted.

NEW YORK—2006 24-HOUR $PM_{2.5}$ NAAQS

[Primary and secondary]

Designated area	Designation [a]		Classification	
	Date [1]	Type	Date [2]	Type
New York-N. New Jersey-Long Island, NY–NJ–CT:				
Bronx County		NonAttainment		Moderate.
Kings County		NonAttainment		Moderate.
Nassau County		NonAttainment		Moderate.
New York County		NonAttainment		Moderate.
Orange County		NonAttainment		Moderate.
Queens County		NonAttainment		Moderate.
Richmond County		NonAttainment		Moderate.
Rockland County		NonAttainment		Moderate.
Suffolk County		NonAttainment		Moderate.
Westchester County		NonAttainment		Moderate.
Rest of State:				
AQCR 158 Central New York Intrastate (remainder of):				
Cortland County		Unclassifiable/Attainment..		
Herkimer County		Unclassifiable/Attainment..		
Lewis County		Unclassifiable/Attainment..		
Oneida County		Unclassifiable/Attainment..		
AQCR 159 Champlain Valley Interstate (remainder of):				
Clinton County		Unclassifiable/Attainment..		
Franklin County		Unclassifiable/Attainment..		
Hamilton County		Unclassifiable/Attainment..		
St. Lawrence County		Unclassifiable/Attainment..		
Warren County		Unclassifiable/Attainment..		
Washington County		Unclassifiable/Attainment..		
AQCR 160 Finger Lake Intrastate:				
Seneca County		Unclassifiable/Attainment..		
Wyoming County		Unclassifiable/Attainment..		
Yates County		Unclassifiable/Attainment..		
AQCR 161 Hudson Valley Intrastate (remainder of):				
Columbia County		Unclassifiable/Attainment..		
Fulton County		Unclassifiable/Attainment..		
Ulster County		Unclassifiable/Attainment..		
AQCR 163 Southern Tier East Intrastate:				

NEW YORK—2006 24-HOUR $PM_{2.5}$ NAAQS—Continued

[Primary and secondary]

Designated area	Designation [a]		Classification	
	Date [1]	Type	Date [2]	Type
Broome County		Unclassifiable/Attainment..		
Chenango County		Unclassifiable/Attainment..		
Delaware County		Unclassifiable/Attainment..		
Otsego County		Unclassifiable/Attainment..		
Sullivan County		Unclassifiable/Attainment..		
Tioga County		Unclassifiable/Attainment..		
AQCR 164 Southern Tier West Intrastate:				
Allegany County		Unclassifiable/Attainment..		
Cattaraugus County		Unclassifiable/Attainment..		
Chemung County		Unclassifiable/Attainment..		
Schuyler County		Unclassifiable/Attainment..		
Steuben County		Unclassifiable/Attainment..		
Tompkins County		Unclassifiable/Attainment..		
Albany-Schenectady-Troy, NY:				
Albany County		Unclassifiable/Attainment..		
Greene County		Unclassifiable/Attainment..		
Montgomery County		Unclassifiable/Attainment..		
Rensselaer County		Unclassifiable/Attainment..		
Saratoga County		Unclassifiable/Attainment..		
Schenectady County		Unclassifiable/Attainment..		
Schoharie County		Unclassifiable/Attainment..		
Buffalo-Niagara Falls, NY:				
Erie County		Unclassifiable/Attainment..		
Niagara County		Unclassifiable/Attainment..		
Essex County, NY:				
Essex County		Unclassifiable/Attainment..		
Jamestown, NY:				
Chautauqua County		Unclassifiable/Attainment..		
Jefferson County, NY:				
Jefferson County		Unclassifiable/Attainment..		
Poughkeepsie, NY:				
Dutchess County		Unclassifiable/Attainment..		
Putnam County		Unclassifiable/Attainment..		
Rochester, NY:				
Genesee County		Unclassifiable/Attainment..		
Livingston County		Unclassifiable/Attainment..		
Monroe County		Unclassifiable/Attainment..		
Ontario County		Unclassifiable/Attainment..		
Orleans County		Unclassifiable/Attainment..		
Wayne County		Unclassifiable/Attainment..		
Syracuse, NY:				
Cayuga County		Unclassifiable/Attainment..		
Madison County		Unclassifiable/Attainment..		
Onondaga County		Unclassifiable/Attainment..		
Oswego County		Unclassifiable/Attainment..		

[a] Includes Indian Country located in each county or area, except as otherwise specified.
[1] This date is 30 days after November 13, 2009, unless otherwise noted.
[2] This date is July 2, 2014, unless otherwise noted.

* * * * *

■ 35. Section 81.334 is amended as follows:

■ a. By removing the tables titled ''North Carolina—$PM_{2.5}$ (Annual NAAQS)'' and ''North Carolina—$PM_{2.5}$ [24-hour NAAQS]''.

■ b. By adding three tables titled ''North Carolina—1997 Annual $PM_{2.5}$ NAAQS (Primary and Secondary)'' and ''North Carolina—1997 24-hour $PM_{2.5}$ NAAQS (Primary and Secondary)'' and ''North Carolina—2006 24-hour $PM_{2.5}$ NAAQS (Primary and Secondary)'' before the table titled ''North Carolina—NO_2 (1971 Annual Standard)''.

The additions read as follows:

§ 81.334 North Carolina.

* * * * *

NORTH CAROLINA—1997 ANNUAL $PM_{2.5}$NAAQS

[Primary and secondary]

Designated area	Designation [a]		Classification	
	Date [1]	Type	Date [2]	Type
Greensboro-Winston Salem-High Point, NC:				
Davidson County	12/19/11	Attainment.		

NORTH CAROLINA—1997 ANNUAL $PM_{2.5}$NAAQS—Continued

[Primary and secondary]

Designated area	Designation [a]		Classification	
	Date [1]	Type	Date [2]	Type
Guilford County	12/19/11	Attainment.		
Hickory-Morganton-Lenoir, NC:				
Catawba County	12/19/11	Attainment.		
Rest of State:				
Alamance County		Unclassifiable/Attainment.		
Alexander County		Unclassifiable/Attainment.		
Alleghany County		Unclassifiable/Attainment.		
Anson County		Unclassifiable/Attainment.		
Ashe County		Unclassifiable/Attainment.		
Avery County		Unclassifiable/Attainment.		
Beaufort County		Unclassifiable/Attainment.		
Bertie County		Unclassifiable/Attainment.		
Bladen County		Unclassifiable/Attainment.		
Brunswick County		Unclassifiable/Attainment.		
Buncombe County		Unclassifiable/Attainment.		
Burke County		Unclassifiable/Attainment.		
Cabarrus County		Unclassifiable/Attainment.		
Caldwell County		Unclassifiable/Attainment.		
Camden County		Unclassifiable/Attainment.		
Carteret County		Unclassifiable/Attainment.		
Caswell County		Unclassifiable/Attainment.		
Catawba County		Unclassifiable/Attainment.		
Chatham County		Unclassifiable/Attainment.		
Cherokee County		Unclassifiable/Attainment.		
Chowan County		Unclassifiable/Attainment.		
Clay County		Unclassifiable/Attainment.		
Cleveland County		Unclassifiable/Attainment.		
Columbus County		Unclassifiable/Attainment.		
Craven County		Unclassifiable/Attainment.		
Cumberland County		Unclassifiable/Attainment.		
Currituck County		Unclassifiable/Attainment.		
Dare County		Unclassifiable/Attainment.		
Davidson County		Unclassifiable/Attainment.		
Davie County		Unclassifiable/Attainment.		
Duplin County		Unclassifiable/Attainment.		
Durham County		Unclassifiable/Attainment.		
Edgecombe County		Unclassifiable/Attainment.		
Forsyth County		Unclassifiable/Attainment.		
Franklin County		Unclassifiable/Attainment.		
Gaston County		Unclassifiable/Attainment.		
Gates County		Unclassifiable/Attainment.		
Graham County		Unclassifiable/Attainment.		
Granville County		Unclassifiable/Attainment.		
Greene County		Unclassifiable/Attainment.		
Guilford County		Unclassifiable/Attainment.		
Halifax County		Unclassifiable/Attainment.		
Harnett County		Unclassifiable/Attainment.		
Haywood County		Unclassifiable/Attainment.		
Henderson County		Unclassifiable/Attainment.		
Hertford County		Unclassifiable/Attainment.		
Hoke County		Unclassifiable/Attainment.		
Hyde County		Unclassifiable/Attainment.		
Iredell County		Unclassifiable/Attainment.		
Jackson County		Unclassifiable/Attainment.		
Johnston County		Unclassifiable/Attainment.		
Jones County		Unclassifiable/Attainment.		
Lee County		Unclassifiable/Attainment.		
Lenoir County		Unclassifiable/Attainment.		
Lincoln County		Unclassifiable/Attainment.		
McDowell County		Unclassifiable/Attainment.		
Macon County		Unclassifiable/Attainment.		
Madison County		Unclassifiable/Attainment.		
Martin County		Unclassifiable/Attainment.		
Mecklenburg County		Unclassifiable/Attainment.		
Mitchell County		Unclassifiable/Attainment.		
Montgomery County		Unclassifiable/Attainment.		
Moore County		Unclassifiable/Attainment.		
Nash County		Unclassifiable/Attainment.		
New Hanover County		Unclassifiable/Attainment.		

NORTH CAROLINA—1997 ANNUAL $PM_{2.5}$NAAQS—Continued

[Primary and secondary]

Designated area	Designation [a]		Classification	
	Date [1]	Type	Date [2]	Type
Northampton County		Unclassifiable/Attainment.		
Onslow County		Unclassifiable/Attainment.		
Orange County		Unclassifiable/Attainment.		
Pamlico County		Unclassifiable/Attainment.		
Pasquotank County		Unclassifiable/Attainment.		
Pender County		Unclassifiable/Attainment.		
Perquimans County		Unclassifiable/Attainment.		
Person County		Unclassifiable/Attainment.		
Pitt County		Unclassifiable/Attainment.		
Polk County		Unclassifiable/Attainment.		
Randolph County		Unclassifiable/Attainment.		
Richmond County		Unclassifiable/Attainment.		
Robeson County		Unclassifiable/Attainment.		
Rockingham County		Unclassifiable/Attainment.		
Rowan County		Unclassifiable/Attainment.		
Rutherford County		Unclassifiable/Attainment.		
Sampson County		Unclassifiable/Attainment.		
Scotland County		Unclassifiable/Attainment.		
Stanly County		Unclassifiable/Attainment.		
Stokes County		Unclassifiable/Attainment.		
Surry County		Unclassifiable/Attainment.		
Swain County		Unclassifiable/Attainment.		
Transylvania County		Unclassifiable/Attainment.		
Tyrrell County		Unclassifiable/Attainment.		
Union County		Unclassifiable/Attainment.		
Vance County		Unclassifiable/Attainment.		
Wake County		Unclassifiable/Attainment.		
Warren County		Unclassifiable/Attainment.		
Washington County		Unclassifiable/Attainment.		
Watauga County		Unclassifiable/Attainment.		
Wayne County		Unclassifiable/Attainment.		
Wilkes County		Unclassifiable/Attainment.		
Wilson County		Unclassifiable/Attainment.		
Yadkin County		Unclassifiable/Attainment.		
Yancey County		Unclassifiable/Attainment.		

[a] Includes Indian Country located in each county or area, except as otherwise specified.
[1] This date is 30 days after November 13, 2009, unless otherwise noted.

NORTH CAROLINA—1997 24-HOUR $PM_{2.5}$ NAAQS

[Primary and secondary]

Designated area	Designation [a]		Classification	
	Date [1]	Type	Date	Type
Statewide:				
Alamance County		Unclassifiable/Attainment.		
Alexander County		Unclassifiable/Attainment.		
Alleghany County		Unclassifiable/Attainment.		
Anson County		Unclassifiable/Attainment.		
Ashe County		Unclassifiable/Attainment.		
Avery County		Unclassifiable/Attainment.		
Beaufort County		Unclassifiable/Attainment.		
Bertie County		Unclassifiable/Attainment.		
Bladen County		Unclassifiable/Attainment.		
Brunswick County		Unclassifiable/Attainment.		
Buncombe County		Unclassifiable/Attainment.		
Burke County		Unclassifiable/Attainment.		
Cabarrus County		Unclassifiable/Attainment.		
Caldwell County		Unclassifiable/Attainment.		
Camden County		Unclassifiable/Attainment.		
Carteret County		Unclassifiable/Attainment.		
Caswell County		Unclassifiable/Attainment.		
Chatham County		Unclassifiable/Attainment.		
Cherokee County		Unclassifiable/Attainment.		
Chowan County		Unclassifiable/Attainment.		
Clay County		Unclassifiable/Attainment.		
Cleveland County		Unclassifiable/Attainment.		

NORTH CAROLINA—1997 24-HOUR $PM_{2.5}$ NAAQS—Continued

[Primary and secondary]

Designated area	Designation [a]		Classification	
	Date [1]	Type	Date	Type
Columbus County		Unclassifiable/Attainment.		
Craven County		Unclassifiable/Attainment.		
Cumberland County		Unclassifiable/Attainment.		
Currituck County		Unclassifiable/Attainment.		
Dare County		Unclassifiable/Attainment.		
Davidson County		Unclassifiable/Attainment.		
Davie County		Unclassifiable/Attainment.		
Duplin County		Unclassifiable/Attainment.		
Durham County		Unclassifiable/Attainment.		
Edgecombe County		Unclassifiable/Attainment.		
Forsyth County		Unclassifiable/Attainment.		
Franklin County		Unclassifiable/Attainment.		
Gaston County		Unclassifiable/Attainment.		
Gates County		Unclassifiable/Attainment.		
Graham County		Unclassifiable/Attainment.		
Granville County		Unclassifiable/Attainment.		
Greene County		Unclassifiable/Attainment.		
Guilford County		Unclassifiable/Attainment.		
Halifax County		Unclassifiable/Attainment.		
Harnett County		Unclassifiable/Attainment.		
Haywood County		Unclassifiable/Attainment.		
Henderson County		Unclassifiable/Attainment.		
Hertford County		Unclassifiable/Attainment.		
Hoke County		Unclassifiable/Attainment.		
Hyde County		Unclassifiable/Attainment.		
Iredell County		Unclassifiable/Attainment.		
Jackson County		Unclassifiable/Attainment.		
Johnston County		Unclassifiable/Attainment.		
Jones County		Unclassifiable/Attainment.		
Lee County		Unclassifiable/Attainment.		
Lenoir County		Unclassifiable/Attainment.		
Lincoln County		Unclassifiable/Attainment.		
McDowell County		Unclassifiable/Attainment.		
Macon County		Unclassifiable/Attainment.		
Madison County		Unclassifiable/Attainment.		
Martin County		Unclassifiable/Attainment.		
Mecklenburg County		Unclassifiable/Attainment.		
Mitchell County		Unclassifiable/Attainment.		
Montgomery County		Unclassifiable/Attainment.		
Moore County		Unclassifiable/Attainment.		
Nash County		Unclassifiable/Attainment.		
New Hanover County		Unclassifiable/Attainment.		
Northampton County		Unclassifiable/Attainment.		
Onslow County		Unclassifiable/Attainment.		
Orange County		Unclassifiable/Attainment.		
Pamlico County		Unclassifiable/Attainment.		
Pasquotank County		Unclassifiable/Attainment.		
Pender County		Unclassifiable/Attainment.		
Perquimans County		Unclassifiable/Attainment.		
Person County		Unclassifiable/Attainment.		
Pitt County		Unclassifiable/Attainment.		
Polk County		Unclassifiable/Attainment.		
Randolph County		Unclassifiable/Attainment.		
Richmond County		Unclassifiable/Attainment.		
Robeson County		Unclassifiable/Attainment.		
Rockingham County		Unclassifiable/Attainment.		
Rowan County		Unclassifiable/Attainment.		
Rutherford County		Unclassifiable/Attainment.		
Sampson County		Unclassifiable/Attainment.		
Scotland County		Unclassifiable/Attainment.		
Stanly County		Unclassifiable/Attainment.		
Stokes County		Unclassifiable/Attainment.		
Surry County		Unclassifiable/Attainment.		
Swain County		Unclassifiable/Attainment.		
Transylvania County		Unclassifiable/Attainment.		
Tyrrell County		Unclassifiable/Attainment.		
Union County		Unclassifiable/Attainment.		
Vance County		Unclassifiable/Attainment.		
Wake County		Unclassifiable/Attainment.		

NORTH CAROLINA—1997 24-HOUR $PM_{2.5}$ NAAQS—Continued

[Primary and secondary]

Designated area	Designation [a]		Classification	
	Date [1]	Type	Date	Type
Warren County		Unclassifiable/Attainment.		
Washington County		Unclassifiable/Attainment.		
Watauga County		Unclassifiable/Attainment.		
Wayne County		Unclassifiable/Attainment.		
Wilkes County		Unclassifiable/Attainment.		
Wilson County		Unclassifiable/Attainment.		
Yadkin County		Unclassifiable/Attainment.		
Yancey County		Unclassifiable/Attainment.		

[a] Includes Indian Country located in each county or area, except as otherwise specified.
[1] This date is 90 days after January 5, 2005, unless otherwise noted.

NORTH CAROLINA—2006 24-HOUR $PM_{2.5}$ NAAQS

[Primary and secondary]

Designated area	Designation [a]		Classification	
	Date [1]	Type	Date	Type
Statewide:				
Alamance County		Unclassifiable/Attainment.		
Alexander County		Unclassifiable/Attainment.		
Alleghany County		Unclassifiable/Attainment.		
Anson County		Unclassifiable/Attainment.		
Ashe County		Unclassifiable/Attainment.		
Avery County		Unclassifiable/Attainment.		
Beaufort County		Unclassifiable/Attainment.		
Bertie County		Unclassifiable/Attainment.		
Bladen County		Unclassifiable/Attainment.		
Brunswick County		Unclassifiable/Attainment.		
Buncombe County		Unclassifiable/Attainment.		
Burke County		Unclassifiable/Attainment.		
Cabarrus County		Unclassifiable/Attainment.		
Caldwell County		Unclassifiable/Attainment.		
Camden County		Unclassifiable/Attainment.		
Carteret County		Unclassifiable/Attainment.		
Caswell County		Unclassifiable/Attainment.		
Catawba County		Unclassifiable/Attainment.		
Chatham County		Unclassifiable/Attainment.		
Cherokee County		Unclassifiable/Attainment.		
Chowan County		Unclassifiable/Attainment.		
Clay County		Unclassifiable/Attainment.		
Cleveland County		Unclassifiable/Attainment.		
Columbus County		Unclassifiable/Attainment.		
Craven County		Unclassifiable/Attainment.		
Cumberland County		Unclassifiable/Attainment.		
Currituck County		Unclassifiable/Attainment.		
Dare County		Unclassifiable/Attainment.		
Davidson County		Unclassifiable/Attainment.		
Davie County		Unclassifiable/Attainment.		
Duplin County		Unclassifiable/Attainment.		
Durham County		Unclassifiable/Attainment.		
Edgecombe County		Unclassifiable/Attainment.		
Forsyth County		Unclassifiable/Attainment.		
Franklin County		Unclassifiable/Attainment.		
Gaston County		Unclassifiable/Attainment.		
Gates County		Unclassifiable/Attainment.		
Graham County		Unclassifiable/Attainment.		
Granville County		Unclassifiable/Attainment.		
Greene County		Unclassifiable/Attainment.		
Guilford County		Unclassifiable/Attainment.		
Halifax County		Unclassifiable/Attainment.		
Harnett County		Unclassifiable/Attainment.		
Haywood County		Unclassifiable/Attainment.		
Henderson County		Unclassifiable/Attainment.		
Hertford County		Unclassifiable/Attainment.		
Hoke County		Unclassifiable/Attainment.		
Hyde County		Unclassifiable/Attainment.		
Iredell County		Unclassifiable/Attainment.		

NORTH CAROLINA—2006 24-HOUR $PM_{2.5}$ NAAQS—Continued

[Primary and secondary]

Designated area	Designation [a]		Classification	
	Date [1]	Type	Date	Type
Jackson County		Unclassifiable/Attainment.		
Johnston County		Unclassifiable/Attainment.		
Jones County		Unclassifiable/Attainment.		
Lee County		Unclassifiable/Attainment.		
Lenoir County		Unclassifiable/Attainment.		
Lincoln County		Unclassifiable/Attainment.		
McDowell County		Unclassifiable/Attainment.		
Macon County		Unclassifiable/Attainment.		
Madison County		Unclassifiable/Attainment.		
Martin County		Unclassifiable/Attainment.		
Mecklenburg County		Unclassifiable/Attainment.		
Mitchell County		Unclassifiable/Attainment.		
Montgomery County		Unclassifiable/Attainment.		
Moore County		Unclassifiable/Attainment.		
Nash County		Unclassifiable/Attainment.		
New Hanover County		Unclassifiable/Attainment.		
Northampton County		Unclassifiable/Attainment.		
Onslow County		Unclassifiable/Attainment.		
Orange County		Unclassifiable/Attainment.		
Pamlico County		Unclassifiable/Attainment.		
Pasquotank County		Unclassifiable/Attainment.		
Pender County		Unclassifiable/Attainment.		
Perquimans County		Unclassifiable/Attainment.		
Person County		Unclassifiable/Attainment.		
Pitt County		Unclassifiable/Attainment.		
Polk County		Unclassifiable/Attainment.		
Randolph County		Unclassifiable/Attainment.		
Richmond County		Unclassifiable/Attainment.		
Robeson County		Unclassifiable/Attainment.		
Rockingham County		Unclassifiable/Attainment.		
Rowan County		Unclassifiable/Attainment.		
Rutherford County		Unclassifiable/Attainment.		
Sampson County		Unclassifiable/Attainment.		
Scotland County		Unclassifiable/Attainment.		
Stanly County		Unclassifiable/Attainment.		
Stokes County		Unclassifiable/Attainment.		
Surry County		Unclassifiable/Attainment.		
Swain County		Unclassifiable/Attainment.		
Transylvania County		Unclassifiable/Attainment.		
Tyrrell County		Unclassifiable/Attainment.		
Union County		Unclassifiable/Attainment.		
Vance County		Unclassifiable/Attainment.		
Wake County		Unclassifiable/Attainment.		
Warren County		Unclassifiable/Attainment.		
Washington County		Unclassifiable/Attainment.		
Watauga County		Unclassifiable/Attainment.		
Wayne County		Unclassifiable/Attainment.		
Wilkes County		Unclassifiable/Attainment.		
Wilson County		Unclassifiable/Attainment.		
Yadkin County		Unclassifiable/Attainment.		
Yancey County		Unclassifiable/Attainment.		

[a] Includes Indian Country located in each county or area, except as otherwise specified.
[1] This date is 30 days after November 13, 2009, unless otherwise noted.

* * * * *

■ 36. Section 81.335 is amended as follows:

■ a. By removing the tables titled ''North Dakota—$PM_{2.5}$ (Annual NAAQS)'' and ''North Dakota—$PM_{2.5}$ [24-hour NAAQS]''.

■ b. By adding three tables titled ''North Dakota—1997 Annual $PM_{2.5}$ NAAQS (Primary and Secondary)'' and ''North Dakota—1997 24-hour $PM_{2.5}$ NAAQS (Primary and Secondary)'' and ''North Dakota—2006 24-hour $PM_{2.5}$ NAAQS (Primary and Secondary)'' before the table titled ''North Dakota—NO_2 (1971 Annual Standard)''.

The additions read as follows:

§ 81.335 North Dakota.

* * * * *

NORTH DAKOTA—1997 ANNUAL $PM_{2.5}$ NAAQS

[Primary and secondary]

Designated area	Designation [a]		Classification	
	Date [1]	Type	Date	Type
AQCR 130 Metropolitan Fargo-Moorhead Interstate:				
Cass County		Unclassifiable/Attainment.		
Rest of State, AQCR 172:				
Adams County		Unclassifiable/Attainment.		
Barnes County		Unclassifiable/Attainment.		
Benson County		Unclassifiable/Attainment.		
Billings County		Unclassifiable/Attainment.		
Bottineau County		Unclassifiable/Attainment.		
Bowman County		Unclassifiable/Attainment.		
Burke County		Unclassifiable/Attainment.		
Burleigh County		Unclassifiable/Attainment.		
Cavalier County		Unclassifiable/Attainment.		
Dickey County		Unclassifiable/Attainment.		
Divide County		Unclassifiable/Attainment.		
Dunn County		Unclassifiable/Attainment.		
Eddy County		Unclassifiable/Attainment.		
Emmons County		Unclassifiable/Attainment.		
Foster County		Unclassifiable/Attainment.		
Golden Valley County		Unclassifiable/Attainment.		
Grand Forks County		Unclassifiable/Attainment.		
Grant County		Unclassifiable/Attainment.		
Griggs County		Unclassifiable/Attainment.		
Hettinger County		Unclassifiable/Attainment.		
Kidder County		Unclassifiable/Attainment.		
LaMoure County		Unclassifiable/Attainment.		
Logan County		Unclassifiable/Attainment.		
McHenry County		Unclassifiable/Attainment.		
McIntosh County		Unclassifiable/Attainment.		
McKenzie County		Unclassifiable/Attainment.		
McLean County		Unclassifiable/Attainment.		
Mercer County		Unclassifiable/Attainment.		
Morton County		Unclassifiable/Attainment.		
Mountrail County		Unclassifiable/Attainment.		
Nelson County		Unclassifiable/Attainment.		
Oliver County		Unclassifiable/Attainment.		
Pembina County		Unclassifiable/Attainment.		
Pierce County		Unclassifiable/Attainment.		
Ramsey County		Unclassifiable/Attainment.		
Ransom County		Unclassifiable/Attainment.		
Renville County		Unclassifiable/Attainment.		
Richland County		Unclassifiable/Attainment.		
Rolette County		Unclassifiable/Attainment.		
Sargent County		Unclassifiable/Attainment.		
Sheridan County		Unclassifiable/Attainment.		
Sioux County		Unclassifiable/Attainment.		
Slope County		Unclassifiable/Attainment.		
Stark County		Unclassifiable/Attainment.		
Steele County		Unclassifiable/Attainment.		
Stutsman County		Unclassifiable/Attainment.		
Towner County		Unclassifiable/Attainment.		
Traill County		Unclassifiable/Attainment.		
Walsh County		Unclassifiable/Attainment.		
Ward County		Unclassifiable/Attainment.		
Wells County		Unclassifiable/Attainment.		
Williams County		Unclassifiable/Attainment.		

[a] Includes Indian Country located in each county or area, except as otherwise specified.
[1] This date is 90 days after January 5, 2005, unless otherwise noted.

NORTH DAKOTA—1997 24-HOUR $PM_{2.5}$ NAAQS

[Primary and secondary]

Designated area	Designation [a]		Classification	
	Date [1]	Type	Date	Type
AQCR 130 Metropolitan Fargo-Moorhead Interstate:				
Cass County		Unclassifiable/Attainment.		
Rest of State, AQCR 172:				

NORTH DAKOTA—1997 24-HOUR $PM_{2.5}$ NAAQS—Continued

[Primary and secondary]

Designated area	Designation [a]		Classification	
	Date [1]	Type	Date	Type
Adams County		Unclassifiable/Attainment.		
Barnes County		Unclassifiable/Attainment.		
Benson County		Unclassifiable/Attainment.		
Billings County		Unclassifiable/Attainment.		
Bottineau County		Unclassifiable/Attainment.		
Bowman County		Unclassifiable/Attainment.		
Burke County		Unclassifiable/Attainment.		
Burleigh County		Unclassifiable/Attainment.		
Cavalier County		Unclassifiable/Attainment.		
Dickey County		Unclassifiable/Attainment.		
Divide County		Unclassifiable/Attainment.		
Dunn County		Unclassifiable/Attainment.		
Eddy County		Unclassifiable/Attainment.		
Emmons County		Unclassifiable/Attainment.		
Foster County		Unclassifiable/Attainment.		
Golden Valley County		Unclassifiable/Attainment.		
Grand Forks County		Unclassifiable/Attainment.		
Grant County		Unclassifiable/Attainment.		
Griggs County		Unclassifiable/Attainment.		
Hettinger County		Unclassifiable/Attainment.		
Kidder County		Unclassifiable/Attainment.		
LaMoure County		Unclassifiable/Attainment.		
Logan County		Unclassifiable/Attainment.		
McHenry County		Unclassifiable/Attainment.		
McIntosh County		Unclassifiable/Attainment.		
McKenzie County		Unclassifiable/Attainment.		
McLean County		Unclassifiable/Attainment.		
Mercer County		Unclassifiable/Attainment.		
Morton County		Unclassifiable/Attainment.		
Mountrail County		Unclassifiable/Attainment.		
Nelson County		Unclassifiable/Attainment.		
Oliver County		Unclassifiable/Attainment.		
Pembina County		Unclassifiable/Attainment.		
Pierce County		Unclassifiable/Attainment.		
Ramsey County		Unclassifiable/Attainment.		
Ransom County		Unclassifiable/Attainment.		
Renville County		Unclassifiable/Attainment.		
Richland County		Unclassifiable/Attainment.		
Rolette County		Unclassifiable/Attainment.		
Sargent County		Unclassifiable/Attainment.		
Sheridan County		Unclassifiable/Attainment.		
Sioux County		Unclassifiable/Attainment.		
Slope County		Unclassifiable/Attainment.		
Stark County		Unclassifiable/Attainment.		
Steele County		Unclassifiable/Attainment.		
Stutsman County		Unclassifiable/Attainment.		
Towner County		Unclassifiable/Attainment.		
Traill County		Unclassifiable/Attainment.		
Walsh County		Unclassifiable/Attainment.		
Ward County		Unclassifiable/Attainment.		
Wells County		Unclassifiable/Attainment.		
Williams County		Unclassifiable/Attainment.		

[a] Includes Indian Country located in each county or area, except as otherwise specified.
[1] This date is 90 days after January 5, 2005, unless otherwise noted.

NORTH DAKOTA—2006 24-HOUR $PM_{2.5}$ NAAQS

(Primary and secondary)

Designated area	Designation [a]		Classification	
	Date [1]	Type	Date	Type
AQCR 130 Metropolitan Fargo-Moorhead Interstate:				
Cass County		Unclassifiable/Attainment.		
Rest of State, AQCR 172:				
Adams County		Unclassifiable/Attainment.		
Barnes County		Unclassifiable/Attainment.		
Benson County		Unclassifiable/Attainment.		

NORTH DAKOTA—2006 24-HOUR $PM_{2.5}$ NAAQS—Continued

(Primary and secondary)

Designated area	Designation [a]		Classification	
	Date [1]	Type	Date	Type
Billings County		Unclassifiable/Attainment.		
Bottineau County		Unclassifiable/Attainment.		
Bowman County		Unclassifiable/Attainment.		
Burke County		Unclassifiable/Attainment.		
Burleigh County		Unclassifiable/Attainment.		
Cavalier County		Unclassifiable/Attainment.		
Dickey County		Unclassifiable/Attainment.		
Divide County		Unclassifiable/Attainment.		
Dunn County		Unclassifiable/Attainment.		
Eddy County		Unclassifiable/Attainment.		
Emmons County		Unclassifiable/Attainment.		
Foster County		Unclassifiable/Attainment.		
Golden Valley County		Unclassifiable/Attainment.		
Grand Forks County		Unclassifiable/Attainment.		
Grant County		Unclassifiable/Attainment.		
Griggs County		Unclassifiable/Attainment.		
Hettinger County		Unclassifiable/Attainment.		
Kidder County		Unclassifiable/Attainment.		
LaMoure County		Unclassifiable/Attainment.		
Logan County		Unclassifiable/Attainment.		
McHenry County		Unclassifiable/Attainment.		
McIntosh County		Unclassifiable/Attainment.		
McKenzie County		Unclassifiable/Attainment.		
McLean County		Unclassifiable/Attainment.		
Mercer County		Unclassifiable/Attainment.		
Morton County		Unclassifiable/Attainment.		
Mountrail County		Unclassifiable/Attainment.		
Nelson County		Unclassifiable/Attainment.		
Oliver County		Unclassifiable/Attainment.		
Pembina County		Unclassifiable/Attainment.		
Pierce County		Unclassifiable/Attainment.		
Ramsey County		Unclassifiable/Attainment.		
Ransom County		Unclassifiable/Attainment.		
Renville County		Unclassifiable/Attainment.		
Richland County		Unclassifiable/Attainment.		
Rolette County		Unclassifiable/Attainment.		
Sargent County		Unclassifiable/Attainment.		
Sheridan County		Unclassifiable/Attainment.		
Sioux County		Unclassifiable/Attainment.		
Slope County		Unclassifiable/Attainment.		
Stark County		Unclassifiable/Attainment.		
Steele County		Unclassifiable/Attainment.		
Stutsman County		Unclassifiable/Attainment.		
Towner County		Unclassifiable/Attainment.		
Traill County		Unclassifiable/Attainment.		
Walsh County		Unclassifiable/Attainment.		
Ward County		Unclassifiable/Attainment.		
Wells County		Unclassifiable/Attainment.		
Williams County		Unclassifiable/Attainment.		

[a] Includes Indian Country located in each county or area, except as otherwise specified.
[1] This date is 30 days after November 13, 2009, unless otherwise noted.

* * * * *

■ 37. Section 81.336 is amended as follows:

■ a. By removing the tables titled ''Ohio—$PM_{2.5}$ (Annual NAAQS)'' and ''Ohio—$PM_{2.5}$ [24-hour NAAQS]''.

■ b. By adding three tables titled ''Ohio—1997 Annual $PM_{2.5}$ NAAQS (Primary and Secondary)'' and ''Ohio—1997 24-hour $PM_{2.5}$ NAAQS (Primary and Secondary)'' and ''Ohio—2006 24-hour $PM_{2.5}$ NAAQS (Primary and Secondary)'' before the table titled ''Ohio—NO_2 (1971 Annual Standard)''.

The additions read as follows:

§ 81.336 Ohio.

* * * * *

OHIO—1997 ANNUAL $PM_{2.5}$ NAAQS

[Primary and secondary]

Designated area	Designation [a]		Classification	
	Type	Date [1]	Date	Type
Canton-Massillon, OH:				
Stark County	10/22/13	Attainment.		
Cincinnati-Hamilton, Ohio	12/23/11	Attainment.		
Butler County				
Clermont County				
Hamilton County				
Warren County				
Cleveland-Akron-Lorain, OH	9/18/13	Attainment.		
Ashtabula County (part)				
Ashtabula Township				
Cuyahoga County				
Lake County				
Lorain County				
Medina County				
Portage County				
Summit County				
Columbus, OH	11/7/13	Attainment.		
Coshocton County (part)				
Franklin Township				
Delaware County				
Fairfield County				
Franklin County				
Licking County				
Dayton-Springfield, OH	9/26/13	Attainment.		
Clark County				
Greene County				
Montgomery County				
Huntington-Ashland, OH	12/31/12	Attainment.		
Adams County (part)				
Monroe Township				
Sprigg Township				
Gallia County (part)				
Addison Township				
Cheshire Township				
Lawrence County				
Scioto County				
Parkersburg-Marietta, WV–OH:				
Washington County	8/29/13	Attainment.		
Steubenville-Weirton, OH–WV:				
Jefferson County	9/18/13	Attainment.		
Toledo, OH:				
Lucas County		Unclassifiable/Attainment.		
Wood County		Unclassifiable/Attainment.		
Wheeling, WV–OH:				
Belmont County	8/29/13	Attainment.		
Youngstown-Warren-Sharon, OH–PA:				
Columbiana County		Unclassifiable/Attainment.		
Mahoning County		Unclassifiable/Attainment.		
Trumbull County		Unclassifiable/Attainment.		
Rest of State:				
Adams County (remainder)		Unclassifiable/Attainment.		
Allen County		Unclassifiable/Attainment.		
Ashland County		Unclassifiable/Attainment.		
Ashtabula County (remainder)		Unclassifiable/Attainment.		
Athens County		Unclassifiable/Attainment.		
Auglaize County		Unclassifiable/Attainment.		
Brown County		Unclassifiable/Attainment.		
Carroll County		Unclassifiable/Attainment.		
Champaign County		Unclassifiable/Attainment.		
Clinton County		Unclassifiable/Attainment.		
Coshocton County (remainder)		Unclassifiable/Attainment.		
Crawford County		Unclassifiable/Attainment.		
Darke County		Unclassifiable/Attainment.		
Defiance County		Unclassifiable/Attainment.		
Erie County		Unclassifiable/Attainment.		
Fayette County		Unclassifiable/Attainment.		
Fulton County		Unclassifiable/Attainment.		
Gallia County (remainder)		Unclassifiable/Attainment.		
Geauga County		Unclassifiable/Attainment.		

OHIO—1997 ANNUAL $PM_{2.5}$ NAAQS—Continued

[Primary and secondary]

Designated area	Designation [a]		Classification	
	Type	Date [1]	Date	Type
Guernsey County		Unclassifiable/Attainment.		
Hancock County		Unclassifiable/Attainment.		
Hardin County		Unclassifiable/Attainment.		
Harrison County		Unclassifiable/Attainment.		
Henry County		Unclassifiable/Attainment.		
Highland County		Unclassifiable/Attainment.		
Hocking County		Unclassifiable/Attainment.		
Holmes County		Unclassifiable/Attainment.		
Huron County		Unclassifiable/Attainment.		
Jackson County		Unclassifiable/Attainment.		
Knox County		Unclassifiable/Attainment.		
Logan County		Unclassifiable/Attainment.		
Madison County		Unclassifiable/Attainment.		
Marion County		Unclassifiable/Attainment.		
Meigs County		Unclassifiable/Attainment.		
Mercer County		Unclassifiable/Attainment.		
Miami County		Unclassifiable/Attainment.		
Monroe County		Unclassifiable/Attainment.		
Morgan County		Unclassifiable/Attainment.		
Morrow County		Unclassifiable/Attainment.		
Muskingum County		Unclassifiable/Attainment.		
Noble County		Unclassifiable/Attainment.		
Ottawa County		Unclassifiable/Attainment.		
Paulding County		Unclassifiable/Attainment.		
Perry County		Unclassifiable/Attainment.		
Pickaway County		Unclassifiable/Attainment.		
Pike County		Unclassifiable/Attainment.		
Preble County		Unclassifiable/Attainment.		
Putnam County		Unclassifiable/Attainment.		
Richland County		Unclassifiable/Attainment.		
Ross County		Unclassifiable/Attainment.		
Sandusky County		Unclassifiable/Attainment.		
Seneca County		Unclassifiable/Attainment.		
Shelby County		Unclassifiable/Attainment.		
Tuscarawas County		Unclassifiable/Attainment.		
Union County		Unclassifiable/Attainment.		
Van Wert County		Unclassifiable/Attainment.		
Vinton County		Unclassifiable/Attainment.		
Wayne County		Unclassifiable/Attainment.		
Williams County		Unclassifiable/Attainment.		
Wyandot County		Unclassifiable/Attainment.		

[a] Includes Indian Country located in each county or area, except as otherwise specified.
[1] This date is 90 days after January 5, 2005, unless otherwise noted.

OHIO—1997 24-HOUR $PM_{2.5}$ NAAQS

[Primary and secondary]

Designated area	Designation [a]		Classification	
	Type	Date [1]	Date	Type
Canton-Massillon, OH:				
Stark County		Unclassifiable/Attainment.		
Cleveland-Akron-Lorain, OH:		Unclassifiable/Attainment.		
Cuyahoga County				
Lake County				
Lorain County				
Medina County				
Portage County				
Summit County				
Steubenville-Weirton, OH–WV:				
Jefferson County		Unclassifiable/Attainment.		
Rest of State:				
Adams County		Unclassifiable/Attainment.		
Allen County		Unclassifiable/Attainment.		
Ashland County		Unclassifiable/Attainment.		
Ashtabula County		Unclassifiable/Attainment.		
Athens County		Unclassifiable/Attainment.		

OHIO—1997 24-HOUR $PM_{2.5}$ NAAQS—Continued

[Primary and secondary]

Designated area	Designation [a]		Classification	
	Type	Date [1]	Date	Type
Auglaize County		Unclassifiable/Attainment.		
Belmont County		Unclassifiable/Attainment.		
Brown County		Unclassifiable/Attainment.		
Butler County		Unclassifiable/Attainment.		
Carroll County		Unclassifiable/Attainment.		
Champaign County		Unclassifiable/Attainment.		
Clark County		Unclassifiable/Attainment.		
Clermont County		Unclassifiable/Attainment.		
Clinton County		Unclassifiable/Attainment.		
Columbiana County		Unclassifiable/Attainment.		
Coshocton County		Unclassifiable/Attainment.		
Crawford County		Unclassifiable/Attainment.		
Darke County		Unclassifiable/Attainment.		
Defiance County		Unclassifiable/Attainment.		
Delaware County		Unclassifiable/Attainment.		
Erie County		Unclassifiable/Attainment.		
Fairfield County		Unclassifiable/Attainment.		
Fayette County		Unclassifiable/Attainment.		
Franklin County		Unclassifiable/Attainment.		
Fulton County		Unclassifiable/Attainment.		
Gallia County		Unclassifiable/Attainment.		
Geauga County		Unclassifiable/Attainment.		
Greene County		Unclassifiable/Attainment.		
Guernsey County		Unclassifiable/Attainment.		
Hamilton County		Unclassifiable/Attainment.		
Hancock County		Unclassifiable/Attainment.		
Hardin County		Unclassifiable/Attainment.		
Harrison County		Unclassifiable/Attainment.		
Henry County		Unclassifiable/Attainment.		
Highland County		Unclassifiable/Attainment.		
Hocking County		Unclassifiable/Attainment.		
Holmes County		Unclassifiable/Attainment.		
Huron County		Unclassifiable/Attainment.		
Jackson County		Unclassifiable/Attainment.		
Knox County		Unclassifiable/Attainment.		
Lawrence County		Unclassifiable/Attainment.		
Licking County		Unclassifiable/Attainment.		
Logan County		Unclassifiable/Attainment.		
Lucas County		Unclassifiable/Attainment.		
Madison County		Unclassifiable/Attainment.		
Mahoning County		Unclassifiable/Attainment.		
Marion County		Unclassifiable/Attainment.		
Meigs County		Unclassifiable/Attainment.		
Mercer County		Unclassifiable/Attainment.		
Miami County		Unclassifiable/Attainment.		
Monroe County		Unclassifiable/Attainment.		
Montgomery County		Unclassifiable/Attainment.		
Morgan County		Unclassifiable/Attainment.		
Morrow County		Unclassifiable/Attainment.		
Muskingum County		Unclassifiable/Attainment.		
Noble County		Unclassifiable/Attainment.		
Ottawa County		Unclassifiable/Attainment.		
Paulding County		Unclassifiable/Attainment.		
Perry County		Unclassifiable/Attainment.		
Pickaway County		Unclassifiable/Attainment.		
Pike County		Unclassifiable/Attainment.		
Preble County		Unclassifiable/Attainment.		
Putnam County		Unclassifiable/Attainment.		
Richland County		Unclassifiable/Attainment.		
Ross County		Unclassifiable/Attainment.		
Sandusky County		Unclassifiable/Attainment.		
Scioto County		Unclassifiable/Attainment.		
Seneca County		Unclassifiable/Attainment.		
Shelby County		Unclassifiable/Attainment.		
Trumbull County		Unclassifiable/Attainment.		
Tuscarawas County		Unclassifiable/Attainment.		
Union County		Unclassifiable/Attainment.		
Van Wert County		Unclassifiable/Attainment.		
Vinton County		Unclassifiable/Attainment.		

OHIO—1997 24-HOUR $PM_{2.5}$ NAAQS—Continued

[Primary and secondary]

Designated area	Designation [a]		Classification	
	Type	Date [1]	Date	Type
Warren County		Unclassifiable/Attainment.		
Washington County		Unclassifiable/Attainment.		
Wayne County		Unclassifiable/Attainment.		
Williams County		Unclassifiable/Attainment.		
Wood County		Unclassifiable/Attainment.		
Wyandot County		Unclassifiable/Attainment.		

[a] Includes Indian Country located in each county or area, except as otherwise specified.
[1] This date is 90 days after January 5, 2005, unless otherwise noted.

OHIO—2006 24-HOUR $PM_{2.5}$ NAAQS

[Primary and secondary]

Designated area	Designation [a]		Classification	
	Date [1]	Type	Date	Type
Canton-Massillon, OH:				
Stark County	10/22/13	Attainment..		
Cleveland-Akron-Lorain, OH	9/18/13	Attainment..		
Cuyahoga County				
Lake County				
Lorain County				
Medina County				
Portage County				
Summit County				
Steubenville-Weirton, OH–WV:				
Jefferson County	9/18/13	Attainment..		
Rest of State:				
Adams County		Unclassifiable/Attainment.		
Allen County		Unclassifiable/Attainment.		
Ashland County		Unclassifiable/Attainment.		
Ashtabula County		Unclassifiable/Attainment.		
Athens County		Unclassifiable/Attainment.		
Auglaize County		Unclassifiable/Attainment.		
Belmont County		Unclassifiable/Attainment.		
Brown County		Unclassifiable/Attainment.		
Butler County		Unclassifiable/Attainment.		
Carroll County		Unclassifiable/Attainment.		
Champaign County		Unclassifiable/Attainment.		
Clark County		Unclassifiable/Attainment.		
Clermont County		Unclassifiable/Attainment.		
Clinton County		Unclassifiable/Attainment.		
Columbiana County		Unclassifiable/Attainment.		
Coshocton County		Unclassifiable/Attainment.		
Crawford County		Unclassifiable/Attainment.		
Darke County		Unclassifiable/Attainment.		
Defiance County		Unclassifiable/Attainment.		
Delaware County		Unclassifiable/Attainment.		
Erie County		Unclassifiable/Attainment.		
Fairfield County		Unclassifiable/Attainment.		
Fayette County		Unclassifiable/Attainment.		
Franklin County		Unclassifiable/Attainment.		
Fulton County		Unclassifiable/Attainment.		
Gallia County		Unclassifiable/Attainment.		
Geauga County		Unclassifiable/Attainment.		
Greene County		Unclassifiable/Attainment.		
Guernsey County		Unclassifiable/Attainment.		
Hamilton County		Unclassifiable/Attainment.		
Hancock County		Unclassifiable/Attainment.		
Hardin County		Unclassifiable/Attainment.		
Harrison County		Unclassifiable/Attainment.		
Henry County		Unclassifiable/Attainment.		
Highland County		Unclassifiable/Attainment.		
Hocking County		Unclassifiable/Attainment.		
Holmes County		Unclassifiable/Attainment.		
Huron County		Unclassifiable/Attainment.		
Jackson County		Unclassifiable/Attainment.		
Knox County		Unclassifiable/Attainment.		

OHIO—2006 24-HOUR $PM_{2.5}$ NAAQS—Continued

[Primary and secondary]

Designated area	Designation [a]		Classification	
	Date [1]	Type	Date	Type
Lawrence County		Unclassifiable/Attainment.		
Licking County		Unclassifiable/Attainment.		
Logan County		Unclassifiable/Attainment.		
Lucas County		Unclassifiable/Attainment.		
Madison County		Unclassifiable/Attainment.		
Mahoning County		Unclassifiable/Attainment.		
Marion County		Unclassifiable/Attainment.		
Meigs County		Unclassifiable/Attainment.		
Mercer County		Unclassifiable/Attainment.		
Miami County		Unclassifiable/Attainment.		
Monroe County		Unclassifiable/Attainment.		
Montgomery County		Unclassifiable/Attainment.		
Morgan County		Unclassifiable/Attainment.		
Morrow County		Unclassifiable/Attainment.		
Muskingum County		Unclassifiable/Attainment.		
Noble County		Unclassifiable/Attainment.		
Ottawa County		Unclassifiable/Attainment.		
Paulding County		Unclassifiable/Attainment.		
Perry County		Unclassifiable/Attainment.		
Pickaway County		Unclassifiable/Attainment.		
Pike County		Unclassifiable/Attainment.		
Preble County		Unclassifiable/Attainment.		
Putnam County		Unclassifiable/Attainment.		
Richland County		Unclassifiable/Attainment.		
Ross County		Unclassifiable/Attainment.		
Sandusky County		Unclassifiable/Attainment.		
Scioto County		Unclassifiable/Attainment.		
Seneca County		Unclassifiable/Attainment.		
Shelby County		Unclassifiable/Attainment.		
Trumbull County		Unclassifiable/Attainment.		
Tuscarawas County		Unclassifiable/Attainment.		
Union County		Unclassifiable/Attainment.		
Van Wert County		Unclassifiable/Attainment.		
Vinton County		Unclassifiable/Attainment.		
Warren County		Unclassifiable/Attainment.		
Washington County		Unclassifiable/Attainment.		
Wayne County		Unclassifiable/Attainment.		
Williams County		Unclassifiable/Attainment.		
Wood County		Unclassifiable/Attainment.		
Wyandot County		Unclassifiable/Attainment.		

[a] Includes Indian Country located in each county or area, except as otherwise specified.
[1] This date is 30 days after November 13, 2009, unless otherwise noted.

* * * * *

■ 38. Section 81.337 is amended as follows:

■ a. By removing the tables titled ''Oklahoma—$PM_{2.5}$ (Annual NAAQS)'' and ''Oklahoma—$PM_{2.5}$ [24-hour NAAQS]''.

■ b. By adding three tables titled ''Oklahoma—1997 Annual $PM_{2.5}$ NAAQS (Primary and Secondary)'' and ''Oklahoma—1997 24-hour $PM_{2.5}$ NAAQS (Primary and Secondary)'' and ''Oklahoma—2006 24-hour $PM_{2.5}$ NAAQS (Primary and Secondary)'' before the table titled ''Oklahoma—NO_2 (1971 Annual Standard)''.

The additions read as follows:

§ 81.337 Oklahoma.

* * * * *

OKLAHOMA—1997 ANNUAL $PM_{2.5}$ NAAQS

[Primary and secondary]

Designated area	Designation [a]		Classification	
	Date [1]	Type	Date	Type
AQCR 017 Metropolitan Fort Smith Interstate:				
Adair County		Unclassifiable/Attainment.		
Cherokee County		Unclassifiable/Attainment.		
Le Flore County		Unclassifiable/Attainment.		
Sequoyah County		Unclassifiable/Attainment.		
AQCR 022 Shreveport-Texarkana-Tyler Intrastate:				
McCurtain County		Unclassifiable/Attainment.		
AQCR 184 Central Oklahoma Intrastate (part):				

OKLAHOMA—1997 ANNUAL $PM_{2.5}$ NAAQS—Continued

[Primary and secondary]

Designated area	Designation [a]		Classification	
	Date [1]	Type	Date	Type
Cleveland County		Unclassifiable/Attainment.		
Oklahoma County		Unclassifiable/Attainment.		
AQCR 184 Central Oklahoma Intrastate (remainder of):				
Canadian County		Unclassifiable/Attainment.		
Grady County		Unclassifiable/Attainment.		
Kingfisher County		Unclassifiable/Attainment.		
Lincoln County		Unclassifiable/Attainment.		
Logan County		Unclassifiable/Attainment.		
McClain County		Unclassifiable/Attainment.		
Pottawatomie County		Unclassifiable/Attainment.		
AQCR 185 North Central Oklahoma Intrastate:				
Garfield County		Unclassifiable/Attainment.		
Grant County		Unclassifiable/Attainment.		
Kay County		Unclassifiable/Attainment.		
Noble County		Unclassifiable/Attainment.		
Payne County		Unclassifiable/Attainment.		
AQCR 186 Northeastern Oklahoma Intrastate:				
Craig County		Unclassifiable/Attainment.		
Creek County		Unclassifiable/Attainment.		
Delaware County		Unclassifiable/Attainment.		
Mayes County		Unclassifiable/Attainment.		
Muskogee County		Unclassifiable/Attainment.		
Nowata County		Unclassifiable/Attainment.		
Okmulgee County		Unclassifiable/Attainment.		
Osage County		Unclassifiable/Attainment.		
Ottawa County		Unclassifiable/Attainment.		
Pawnee County		Unclassifiable/Attainment.		
Rogers County		Unclassifiable/Attainment.		
Tulsa County		Unclassifiable/Attainment.		
Wagoner County		Unclassifiable/Attainment.		
Washington County		Unclassifiable/Attainment.		
AQCR 187 Northwestern Oklahoma Intrastate:				
Alfalfa County		Unclassifiable/Attainment.		
Beaver County		Unclassifiable/Attainment.		
Blaine County		Unclassifiable/Attainment.		
Cimarron County		Unclassifiable/Attainment.		
Custer County		Unclassifiable/Attainment.		
Dewey County		Unclassifiable/Attainment.		
Ellis County		Unclassifiable/Attainment.		
Harper County		Unclassifiable/Attainment.		
Major County		Unclassifiable/Attainment.		
Roger Mills County		Unclassifiable/Attainment.		
Texas County		Unclassifiable/Attainment.		
Woods County		Unclassifiable/Attainment.		
Woodward County		Unclassifiable/Attainment.		
AQCR 188 Southeastern Oklahoma Intrastate:				
Atoka County		Unclassifiable/Attainment.		
Bryan County		Unclassifiable/Attainment.		
Carter County		Unclassifiable/Attainment.		
Choctaw County		Unclassifiable/Attainment.		
Coal County		Unclassifiable/Attainment.		
Garvin County		Unclassifiable/Attainment.		
Haskell County		Unclassifiable/Attainment.		
Hughes County		Unclassifiable/Attainment.		
Johnston County		Unclassifiable/Attainment.		
Latimer County		Unclassifiable/Attainment.		
Love County		Unclassifiable/Attainment.		
McIntosh County		Unclassifiable/Attainment.		
Marshall County		Unclassifiable/Attainment.		
Murray County		Unclassifiable/Attainment.		
Okfuskee County		Unclassifiable/Attainment.		
Pittsburg County		Unclassifiable/Attainment.		
Pontotoc County		Unclassifiable/Attainment.		
Pushmataha County		Unclassifiable/Attainment.		
Seminole County		Unclassifiable/Attainment.		
AQCR 189 Southwestern Oklahoma Intrastate:				
Beckham County		Unclassifiable/Attainment.		
Caddo County		Unclassifiable/Attainment.		
Comanche County		Unclassifiable/Attainment.		

OKLAHOMA—1997 ANNUAL $PM_{2.5}$ NAAQS—Continued

[Primary and secondary]

Designated area	Designation [a]		Classification	
	Date [1]	Type	Date	Type
Cotton County		Unclassifiable/Attainment.		
Greer County		Unclassifiable/Attainment.		
Harmon County		Unclassifiable/Attainment.		
Jackson County		Unclassifiable/Attainment.		
Jefferson County		Unclassifiable/Attainment.		
Kiowa County		Unclassifiable/Attainment.		
Stephens County		Unclassifiable/Attainment.		
Tillman County		Unclassifiable/Attainment.		
Washita County		Unclassifiable/Attainment.		

[a] Includes Indian Country located in each county or area, except as otherwise specified.
[1] This date is 90 days after January 5, 2005, unless otherwise noted.

OKLAHOMA—1997 24-HOUR $PM_{2.5}$ NAAQS

[Primary and secondary]

Designated area	Designation [a]		Classification	
	Date [1]	Type	Date	Type
AQCR 017 Metropolitan Fort Smith Interstate:				
Adair County		Unclassifiable/Attainment.		
Cherokee County		Unclassifiable/Attainment.		
Le Flore County		Unclassifiable/Attainment.		
Sequoyah County		Unclassifiable/Attainment.		
AQCR 022 Shreveport-Texarkana-Tyler Intrastate:				
McCurtain County		Unclassifiable/Attainment.		
AQCR 184 Central Oklahoma Intrastate:				
Canadian County		Unclassifiable/Attainment.		
Cleveland County		Unclassifiable/Attainment.		
Grady County		Unclassifiable/Attainment.		
Kingfisher County		Unclassifiable/Attainment.		
Lincoln County		Unclassifiable/Attainment.		
Logan County		Unclassifiable/Attainment.		
McClain County		Unclassifiable/Attainment.		
Oklahoma County		Unclassifiable/Attainment.		
Pottawatomie County		Unclassifiable/Attainment.		
AQCR 185 North Central Oklahoma Intrastate:				
Garfield County		Unclassifiable/Attainment.		
Grant County		Unclassifiable/Attainment.		
Kay County		Unclassifiable/Attainment.		
Noble County		Unclassifiable/Attainment.		
Payne County		Unclassifiable/Attainment.		
AQCR 186 Northeastern Oklahoma Intrastate:				
Craig County		Unclassifiable/Attainment.		
Creek County		Unclassifiable/Attainment.		
Delaware County		Unclassifiable/Attainment.		
Mayes County		Unclassifiable/Attainment.		
Muskogee County		Unclassifiable/Attainment.		
Nowata County		Unclassifiable/Attainment.		
Okmulgee County		Unclassifiable/Attainment.		
Osage County		Unclassifiable/Attainment.		
Ottawa County		Unclassifiable/Attainment.		
Pawnee County		Unclassifiable/Attainment.		
Rogers County		Unclassifiable/Attainment.		
Tulsa County		Unclassifiable/Attainment.		
Wagoner County		Unclassifiable/Attainment.		
Washington County		Unclassifiable/Attainment.		
AQCR 187 Northwestern Oklahoma Intrastate:				
Alfalfa County		Unclassifiable/Attainment.		
Beaver County		Unclassifiable/Attainment.		
Blaine County		Unclassifiable/Attainment.		
Cimarron County		Unclassifiable/Attainment.		
Custer County		Unclassifiable/Attainment.		
Dewey County		Unclassifiable/Attainment.		
Ellis County		Unclassifiable/Attainment.		
Harper County		Unclassifiable/Attainment.		
Major County		Unclassifiable/Attainment.		
Roger Mills County		Unclassifiable/Attainment.		

OKLAHOMA—1997 24-HOUR $PM_{2.5}$ NAAQS—Continued

[Primary and secondary]

Designated area	Designation [a]		Classification	
	Date [1]	Type	Date	Type
Texas County		Unclassifiable/Attainment.		
Woods County		Unclassifiable/Attainment.		
Woodward County		Unclassifiable/Attainment.		
AQCR 188 Southeastern Oklahoma Intrastate:				
Atoka County		Unclassifiable/Attainment.		
Bryan County		Unclassifiable/Attainment.		
Carter County		Unclassifiable/Attainment.		
Choctaw County		Unclassifiable/Attainment.		
Coal County		Unclassifiable/Attainment.		
Garvin County		Unclassifiable/Attainment.		
Haskell County		Unclassifiable/Attainment.		
Hughes County		Unclassifiable/Attainment.		
Johnston County		Unclassifiable/Attainment.		
Latimer County		Unclassifiable/Attainment.		
Love County		Unclassifiable/Attainment.		
McIntosh County		Unclassifiable/Attainment.		
Marshall County		Unclassifiable/Attainment.		
Murray County		Unclassifiable/Attainment.		
Okfuskee County		Unclassifiable/Attainment.		
Pittsburg County		Unclassifiable/Attainment.		
Pontotoc County		Unclassifiable/Attainment.		
Pushmataha County		Unclassifiable/Attainment.		
Seminole County		Unclassifiable/Attainment.		
AQCR 189 Southwestern Oklahoma Intrastate:				
Beckham County		Unclassifiable/Attainment.		
Caddo County		Unclassifiable/Attainment.		
Comanche County		Unclassifiable/Attainment.		
Cotton County		Unclassifiable/Attainment.		
Greer County		Unclassifiable/Attainment.		
Harmon County		Unclassifiable/Attainment.		
Jackson County		Unclassifiable/Attainment.		
Jefferson County		Unclassifiable/Attainment.		
Kiowa County		Unclassifiable/Attainment.		
Stephens County		Unclassifiable/Attainment.		
Tillman County		Unclassifiable/Attainment.		
Washita County		Unclassifiable/Attainment.		

[a] Includes Indian Country located in each county or area, except as otherwise specified.
[1] This date is 90 days after January 5, 2005, unless otherwise noted.

OKLAHOMA—2006 24-HOUR $PM_{2.5}$ NAAQS

[Primary and secondary]

Designated area	Designation [a]		Classification	
	Date [1]	Type	Date	Type
AQCR 017 Metropolitan Fort Smith Interstate:				
Adair County		Unclassifiable/Attainment.		
Cherokee County		Unclassifiable/Attainment.		
Le Flore County		Unclassifiable/Attainment.		
Sequoyah County		Unclassifiable/Attainment.		
AQCR 022 Shreveport-Texarkana-Tyler Intrastate:				
McCurtain County		Unclassifiable/Attainment.		
AQCR 184 Central Oklahoma Intrastate:				
Canadian County		Unclassifiable/Attainment.		
Cleveland County		Unclassifiable/Attainment.		
Grady County		Unclassifiable/Attainment.		
Kingfisher County		Unclassifiable/Attainment.		
Lincoln County		Unclassifiable/Attainment.		
Logan County		Unclassifiable/Attainment.		
McClain County		Unclassifiable/Attainment.		
Oklahoma County		Unclassifiable/Attainment.		
Pottawatomie County		Unclassifiable/Attainment.		
AQCR 185 North Central Oklahoma Intrastate:				
Garfield County		Unclassifiable/Attainment.		
Grant County		Unclassifiable/Attainment.		
Kay County		Unclassifiable/Attainment.		
Noble County		Unclassifiable/Attainment.		

OKLAHOMA—2006 24-HOUR $PM_{2.5}$ NAAQS—Continued

[Primary and secondary]

Designated area	Designation [a]		Classification	
	Date [1]	Type	Date	Type
Payne County		Unclassifiable/Attainment.		
AQCR 186 Northeastern Oklahoma Intrastate:				
Craig County		Unclassifiable/Attainment.		
Creek County		Unclassifiable/Attainment.		
Delaware County		Unclassifiable/Attainment.		
Mayes County		Unclassifiable/Attainment.		
Muskogee County		Unclassifiable/Attainment.		
Nowata County		Unclassifiable/Attainment.		
Okmulgee County		Unclassifiable/Attainment.		
Osage County		Unclassifiable/Attainment.		
Ottawa County		Unclassifiable/Attainment.		
Pawnee County		Unclassifiable/Attainment.		
Rogers County		Unclassifiable/Attainment.		
Tulsa County		Unclassifiable/Attainment.		
Wagoner County		Unclassifiable/Attainment.		
Washington County		Unclassifiable/Attainment.		
AQCR 187 Northwestern Oklahoma Intrastate:				
Alfalfa County		Unclassifiable/Attainment.		
Beaver County		Unclassifiable/Attainment.		
Blaine County		Unclassifiable/Attainment.		
Cimarron County		Unclassifiable/Attainment.		
Custer County		Unclassifiable/Attainment.		
Dewey County		Unclassifiable/Attainment.		
Ellis County		Unclassifiable/Attainment.		
Harper County		Unclassifiable/Attainment.		
Major County		Unclassifiable/Attainment.		
Roger Mills County		Unclassifiable/Attainment.		
Texas County		Unclassifiable/Attainment.		
Woods County		Unclassifiable/Attainment.		
Woodward County		Unclassifiable/Attainment.		
AQCR 188 Southeastern Oklahoma Intrastate:				
Atoka County		Unclassifiable/Attainment.		
Bryan County		Unclassifiable/Attainment.		
Carter County		Unclassifiable/Attainment.		
Choctaw County		Unclassifiable/Attainment.		
Coal County		Unclassifiable/Attainment.		
Garvin County		Unclassifiable/Attainment.		
Haskell County		Unclassifiable/Attainment.		
Hughes County		Unclassifiable/Attainment.		
Johnston County		Unclassifiable/Attainment.		
Latimer County		Unclassifiable/Attainment.		
Love County		Unclassifiable/Attainment.		
McIntosh County		Unclassifiable/Attainment.		
Marshall County		Unclassifiable/Attainment.		
Murray County		Unclassifiable/Attainment.		
Okfuskee County		Unclassifiable/Attainment.		
Pittsburg County		Unclassifiable/Attainment.		
Pontotoc County		Unclassifiable/Attainment.		
Pushmataha County		Unclassifiable/Attainment.		
Seminole County		Unclassifiable/Attainment.		
AQCR 189 Southwestern Oklahoma Intrastate:				
Beckham County		Unclassifiable/Attainment.		
Caddo County		Unclassifiable/Attainment.		
Comanche County		Unclassifiable/Attainment.		
Cotton County		Unclassifiable/Attainment.		
Greer County		Unclassifiable/Attainment.		
Harmon County		Unclassifiable/Attainment.		
Jackson County		Unclassifiable/Attainment.		
Jefferson County		Unclassifiable/Attainment.		
Kiowa County		Unclassifiable/Attainment.		
Stephens County		Unclassifiable/Attainment.		
Tillman County		Unclassifiable/Attainment.		
Washita County		Unclassifiable/Attainment.		

[a] Includes Indian Country located in each county or area, except as otherwise specified.
[1] This date is 30 days after November 13, 2009, unless otherwise noted.

* * * * *

■ 39. Section 81.338 is amended as follows:

■ a. By removing the tables titled ''Oregon—$PM_{2.5}$ (Annual NAAQS)'' and ''Oregon—$PM_{2.5}$ [24-hour NAAQS]''.

■ b. By adding three tables titled ''Oregon—1997 Annual $PM_{2.5}$ NAAQS (Primary and Secondary)'' and ''Oregon—1997 24-hour $PM_{2.5}$ NAAQS (Primary and Secondary)'' and ''Oregon—2006 24-hour $PM_{2.5}$ NAAQS (Primary and Secondary)'' before the table titled ''Oregon—NO_2 (1971 Annual Standard)''.

The additions read as follows:

§ 81.338 Oregon.

* * * * *

OREGON—1997 ANNUAL $PM_{2.5}$ NAAQS

[Primary and secondary]

Designated area	Designation [a]		Classification	
	Date [1]	Type	Date	Type
Portland-Vancouver AQMA: (Air Quality Maintenance Area):				
Clackamas County (part)		Unclassifiable/Attainment.		
Multnomah County (part)		Unclassifiable/Attainment.		
Washington County (part)		Unclassifiable/Attainment.		
Salem Area: (Salem Area Transportation Study):				
Marion County (part)		Unclassifiable/Attainment.		
Polk County		Unclassifiable/Attainment.		
AQCR 190 Central Oregon Intrastate (remainder of):				
Crook County		Unclassifiable/Attainment.		
Deschutes County		Unclassifiable/Attainment.		
Hood River County		Unclassifiable/Attainment.		
Jefferson County		Unclassifiable/Attainment.		
Klamath County		Unclassifiable/Attainment.		
Lake County		Unclassifiable/Attainment.		
Sherman County		Unclassifiable/Attainment.		
Wasco County		Unclassifiable/Attainment.		
AQCR 191 Eastern Oregon Intrastate:				
Baker County		Unclassifiable/Attainment.		
Gilliam County		Unclassifiable/Attainment.		
Grant County		Unclassifiable/Attainment.		
Harney County		Unclassifiable/Attainment.		
Malheur County		Unclassifiable/Attainment.		
Morrow County		Unclassifiable/Attainment.		
Umatilla County		Unclassifiable/Attainment.		
Union County		Unclassifiable/Attainment.		
Wallowa County		Unclassifiable/Attainment.		
Wheeler County		Unclassifiable/Attainment.		
AQCR 192 Northwest Oregon Intrastate:				
Clatsop County		Unclassifiable/Attainment.		
Lincoln County		Unclassifiable/Attainment.		
Tillamook County		Unclassifiable/Attainment.		
AQCR 193 Portland Interstate (part):				
Lane County (part)		Unclassifiable/Attainment.		
Eugene Springfield Air Quality Maintenance Area				
AQCR 193 Portland Interstate (remainder of):				
Benton County		Unclassifiable/Attainment.		
Clackamas County (remainder)		Unclassifiable/Attainment.		
Columbia County		Unclassifiable/Attainment.		
Lane County (remainder)		Unclassifiable/Attainment.		
Linn County		Unclassifiable/Attainment.		
Marion County (part)		Unclassifiable/Attainment.		
The area outside the Salem Area Transportation Study				
Multnomah County (remainder)		Unclassifiable/Attainment.		
Polk County (part)		Unclassifiable/Attainment.		
The area outside the Salem Area Transportation Study				
Washington County (remainder)		Unclassifiable/Attainment.		
Yamhill County		Unclassifiable/Attainment.		
AQCR 194 Southwest Oregon Intrastate (part):				
Jackson County (part)		Unclassifiable/Attainment.		
Medford-Ashland Air Quality Maintenance Area				
AQCR 194 Southwest Oregon Intrastate (remainder of):				
Coos County		Unclassifiable/Attainment.		
Curry County		Unclassifiable/Attainment.		
Douglas County		Unclassifiable/Attainment.		
Jackson County (remainder)		Unclassifiable/Attainment.		
Josephine County		Unclassifiable/Attainment.		

[a] Includes Indian Country located in each county or area, except as otherwise specified.

[1] This date is 90 days after January 5, 2005, unless otherwise noted.

OREGON—1997 24-HOUR $PM_{2.5}$ NAAQS

[Primary and secondary]

Designated area	Designation [a]		Classification	
	Date [1]	Type	Date	Type
Klamath Falls, OR:				
Klamath County (part)		Unclassifiable/Attainment.		
Townships and ranges defined by T37S R9E Sections 31–32. T38S R8E Sections 1–5, 8–16, 22–26, 35–36. T38S R9E Sections 5–8, 14–15, 17–36. T39S R8E Sections 1–2, 11–13, 24. T39S R9E Sections 1–27. T39S R10E Sections 3–10, 15–20, 29–30.				
Oakridge, OR:				
Lane County (part)		Unclassifiable/Attainment.		
Boundary is defined as a line from Township 21 South, Range 2 East, Section 11 (northwest corner) east to Township 21 South, Range 3 East, Section 11 (northeast corner), south to Township 21 South, Range 3 East, Section 23 (southeast corner), west to Township 21 South, Range 2 East, Section 23 (southwest corner) connecting back to Township 21 South, Range 2 East, Section 11 (northwest corner).				
Rest of State:				
Portland-Vancouver AQMA: (Air Quality Maintenance Area)				
Clackamas County (part)		Unclassifiable/Attainment.		
Multnomah County (part)		Unclassifiable/Attainment.		
Washington County (part)		Unclassifiable/Attainment.		
Salem Area: (Salem Area Transportation Study):				
Marion County (part)		Unclassifiable/Attainment.		
Polk County		Unclassifiable/Attainment.		
AQCR 190 Central Oregon Intrastate:				
Crook County		Unclassifiable/Attainment.		
Deschutes County		Unclassifiable/Attainment.		
Hood River County		Unclassifiable/Attainment.		
Jefferson County		Unclassifiable/Attainment.		
Klamath County (remainder)		Unclassifiable/Attainment.		
Lake County		Unclassifiable/Attainment.		
Sherman County		Unclassifiable/Attainment.		
Wasco County		Unclassifiable/Attainment.		
AQCR 191 Eastern Oregon Intrastate:				
Baker County		Unclassifiable/Attainment.		
Gilliam County		Unclassifiable/Attainment.		
Grant County		Unclassifiable/Attainment.		
Harney County		Unclassifiable/Attainment.		
Malheur County		Unclassifiable/Attainment.		
Morrow County		Unclassifiable/Attainment.		
Umatilla County		Unclassifiable/Attainment.		
Union County		Unclassifiable/Attainment.		
Wallowa County		Unclassifiable/Attainment.		
Wheeler County		Unclassifiable/Attainment.		
AQCR 192 Northwest Oregon Intrastate:				
Clatsop County		Unclassifiable/Attainment.		
Lincoln County		Unclassifiable/Attainment.		
Tillamook County		Unclassifiable/Attainment.		
AQCR 193 Portland Interstate (part):				
Lane County (part)		Unclassifiable/Attainment.		
Eugene Springfield Air Quality Maintenance AQCR 193 Portland Interstate:				
Benton County		Unclassifiable/Attainment.		
Clackamas County (remainder)		Unclassifiable/Attainment.		
Columbia County		Unclassifiable/Attainment.		
Lane County (remainder)		Unclassifiable/Attainment.		
Linn County		Unclassifiable/Attainment.		
Marion County (part)		Unclassifiable/Attainment.		
The area outside the Salem Area Transportation Study:				
Multnomah County (remainder)		Unclassifiable/Attainment.		
Polk County (part)		Unclassifiable/Attainment.		
The area outside the Salem Area Transportation Study:				
Washington County (remainder)		Unclassifiable/Attainment.		
Yamhill County		Unclassifiable/Attainment.		
AQCR 194 Southwest Oregon Intrastate (part):				

OREGON—1997 24-HOUR $PM_{2.5}$ NAAQS—Continued

[Primary and secondary]

Designated area	Designation [a]		Classification	
	Date [1]	Type	Date	Type
Jackson County (part)		Unclassifiable/Attainment.		
Medford-Ashland Air Quality Maintenance Area AQCR 194 Southwest Oregon Intrastate: (remainder of):				
Coos County		Unclassifiable/Attainment.		
Curry County		Unclassifiable/Attainment.		
Douglas County		Unclassifiable/Attainment.		
Jackson County (remainder)		Unclassifiable/Attainment.		
Josephine County		Unclassifiable/Attainment.		

[a] Includes Indian Country located in each county or area, except as otherwise specified.
[1] This date is 90 days after January 5, 2005, unless otherwise noted.

OREGON—2006 24-HOUR $PM_{2.5}$ NAAQS

[Primary and secondary]

Designated area	Designation [a]		Classification	
	Date [1]	Type	Date [2]	Type
Klamath Falls, OR:				
Klamath County (part)		Nonattainment		Moderate.
Townships and ranges defined by T37S R9E Sections 31–32. T38S R8E Sections 1–5, 8–16, 22–26, 35–36. T38S R9E Sections 5–8, 14–15, 17–36. T39S R8E Sections 1–2, 11–13, 24. T39S R9E Sections 1–27. T39S R10E Sections 3–10, 15–20, 29–30.				
Oakridge, OR:				
Lane County (part)		Nonattainment		Moderate.
Boundary is defined as a line from Township 21 South, Range 2 East, Section 11 (northwest corner) east to Township 21 South, Range 3 East, Section 11 (northeast corner), south to Township 21 South, Range 3 East, Section 23 (southeast corner), west to Township 21 South, Range 2 East, Section 23 (southwest corner) connecting back to Township 21 South, Range 2 East, Section 11 (northwest corner).				
Rest of State:				
Portland-Vancouver AQMA: (Air Quality Maintenance Area)				
Clackamas County (part)		Unclassifiable/Attainment.		
Multnomah County (part)		Unclassifiable/Attainment.		
Washington County (part)		Unclassifiable/Attainment.		
Salem Area: (Salem Area Transportation Study):				
Marion County (part)		Unclassifiable/Attainment.		
Polk County		Unclassifiable/Attainment.		
AQCR 190 Central Oregon Intrastate:				
Crook County		Unclassifiable/Attainment.		
Deschutes County		Unclassifiable/Attainment.		
Hood River County		Unclassifiable/Attainment.		
Jefferson County		Unclassifiable/Attainment.		
Klamath County (remainder)		Unclassifiable/Attainment.		
Lake County		Unclassifiable/Attainment.		
Sherman County		Unclassifiable/Attainment.		
Wasco County		Unclassifiable/Attainment.		
AQCR 191 Eastern Oregon Intrastate:				
Baker County		Unclassifiable/Attainment.		
Gilliam County		Unclassifiable/Attainment.		
Grant County		Unclassifiable/Attainment.		
Harney County		Unclassifiable/Attainment.		
Malheur County		Unclassifiable/Attainment.		
Morrow County		Unclassifiable/Attainment.		
Umatilla County		Unclassifiable/Attainment.		
Union County		Unclassifiable/Attainment.		
Wallowa County		Unclassifiable/Attainment.		
Wheeler County		Unclassifiable/Attainment.		
AQCR 192 Northwest Oregon Intrastate:				

OREGON—2006 24-HOUR $PM_{2.5}$ NAAQS—Continued

[Primary and secondary]

Designated area	Designation [a]		Classification	
	Date [1]	Type	Date [2]	Type
Clatsop County		Unclassifiable/Attainment.		
Lincoln County		Unclassifiable/Attainment.		
Tillamook County		Unclassifiable/Attainment.		
AQCR 193 Portland Interstate (part):				
Lane County (part)		Unclassifiable/Attainment.		
Eugene Springfield Air Quality Maintenance AQCR 193 Portland Interstate:				
Benton County		Unclassifiable/Attainment.		
Clackamas County (remainder)		Unclassifiable/Attainment.		
Columbia County		Unclassifiable/Attainment.		
Lane County (remainder)		Unclassifiable/Attainment.		
Linn County		Unclassifiable/Attainment.		
Marion County (part)		Unclassifiable/Attainment.		
The area outside the Salem Area Transportation Study:				
Multnomah County (remainder)		Unclassifiable/Attainment.		
Polk County (part)		Unclassifiable/Attainment.		
The area outside the Salem Area Transportation Study:				
Washington County (remainder)		Unclassifiable/Attainment.		
Yamhill County		Unclassifiable/Attainment.		
AQCR 194 Southwest Oregon Intrastate (part):				
Jackson County (part)		Unclassifiable/Attainment.		
Medford-Ashland Air Quality Maintenance Area AQCR 194 Southwest Oregon Intrastate: (remainder of):				
Coos County		Unclassifiable/Attainment.		
Curry County		Unclassifiable/Attainment.		
Douglas County		Unclassifiable/Attainment.		
Jackson County (remainder)		Unclassifiable/Attainment.		
Josephine County		Unclassifiable/Attainment.		

[a] Includes Indian Country located in each county or area, except as otherwise specified.
[1] his date is 30 days after November 13, 2009, unless otherwise noted.
[2] This date is July 2, 2014, unless otherwise noted.

* * * * *

■ 40. Section 81.339 is amended as follows:

■ a. By removing the tables titled ''Pennsylvania—$PM_{2.5}$ (Annual NAAQS)'' and ''Pennsylvania—$PM_{2.5}$ [24-hour NAAQS]''.

■ b. By adding three tables titled ''Pennsylvania—1997 Annual $PM_{2.5}$ NAAQS (Primary and Secondary)'' and ''Pennsylvania—1997 24-hour $PM_{2.5}$ NAAQS (Primary and Secondary)'' and ''Pennsylvania—2006 24-hour $PM_{2.5}$ NAAQS (Primary and Secondary)'' before the table titled ''Pennsylvania—NO_2 (1971 Annual Standard)''.

The additions read as follows:

§ 81.339 Pennsylvania.

* * * * *

PENNSYLVANIA—1997 ANNUAL $PM_{2.5}$ NAAQS

[Primary and secondary]

Designated area	Designation [a]		Classification	
	Date [1]	Type	Date [2]	Type
Harrisburg-Lebanon-Carlisle, PA:				
Cumberland County		Nonattainment		Moderate.
Dauphin County		Nonattainment		Moderate.
Lebanon County		Nonattainment		Moderate.
Johnstown, PA:				
Cambria County		Nonattainment		Moderate.
Indiana County (part)		Nonattainment		Moderate.
Townships of West Wheatfield, Center, East Wheatfield, and Armagh Borough and Homer City Borough				
Lancaster, PA:				
Lancaster County		Nonattainment		Moderate.
Liberty-Clairton, PA:				
Allegheny County (part)		Nonattainment		Moderate.
Lincoln Borough, Clairton City, Glassport Borough, Liberty Borough, Port Vue Borough				
Philadelphia-Wilmington, PA–NJ–DE:				
Bucks County		Nonattainment		Moderate.

PENNSYLVANIA—1997 ANNUAL $PM_{2.5}$ NAAQS—Continued

[Primary and secondary]

Designated area	Designation [a]		Classification	
	Date [1]	Type	Date [2]	Type
Chester County		Nonattainment		Moderate.
Delaware County		Nonattainment		Moderate.
Montgomery County		Nonattainment		Moderate.
Philadelphia County		Nonattainment		Moderate.
Pittsburgh-Beaver Valley, PA:				
Allegheny County (remainder)		Nonattainment		Moderate.
Armstrong County (part)		Nonattainment		Moderate.
Elderton Borough and Plumcreek and Washington Townships				
Beaver County		Nonattainment		Moderate.
Butler County		Nonattainment		Moderate.
Greene County (part)		Nonattainment		Moderate.
Monongahela Township				
Lawrence County (part)		Nonattainment		Moderate.
Township of Taylor south of New Castle City				
Washington County		Nonattainment		Moderate.
Westmoreland County		Nonattainment		Moderate.
Reading, PA:				
Berks County		Nonattainment		Moderate.
York, PA:				
York County		Nonattainment		Moderate.
Youngstown-Warren-Sharon, OH–PA:				
Mercer County		Unclassifiable/Attainment.		
AQCR 151 Northeast Pennsylvania-Upper Delaware Valley Interstate:				
Bradford County		Unclassifiable/Attainment.		
Carbon County		Unclassifiable/Attainment.		
Lackawanna County		Unclassifiable/Attainment.		
Lehigh County		Unclassifiable/Attainment.		
Luzerne County		Unclassifiable/Attainment.		
Monroe County		Unclassifiable/Attainment.		
Northampton County		Unclassifiable/Attainment.		
Pike County		Unclassifiable/Attainment.		
Schuylkill County		Unclassifiable/Attainment.		
Sullivan County		Unclassifiable/Attainment.		
Susquehanna County		Unclassifiable/Attainment.		
Tioga County		Unclassifiable/Attainment.		
Wayne County		Unclassifiable/Attainment.		
Wyoming County		Unclassifiable/Attainment.		
AQCR 178 Northwest Pennsylvania-Youngstown Interstate:				
Cameron County		Unclassifiable/Attainment.		
Clarion County		Unclassifiable/Attainment.		
Clearfield County		Unclassifiable/Attainment.		
Crawford County		Unclassifiable/Attainment.		
Elk County		Unclassifiable/Attainment.		
Erie County		Unclassifiable/Attainment.		
Forest County		Unclassifiable/Attainment.		
Jefferson County		Unclassifiable/Attainment.		
Lawrence County (remainder)		Unclassifiable/Attainment.		
McKean County		Unclassifiable/Attainment.		
Potter County		Unclassifiable/Attainment.		
Venango County		Unclassifiable/Attainment.		
Warren County		Unclassifiable/Attainment.		
AQCR 195 Central Pennsylvania Intrastate:				
Bedford County		Unclassifiable/Attainment.		
Blair County		Unclassifiable/Attainment.		
Centre County		Unclassifiable/Attainment.		
Clinton County		Unclassifiable/Attainment.		
Columbia County		Unclassifiable/Attainment.		
Fulton County		Unclassifiable/Attainment.		
Huntingdon County		Unclassifiable/Attainment.		
Juniata County		Unclassifiable/Attainment.		
Lycoming County		Unclassifiable/Attainment.		
Mifflin County		Unclassifiable/Attainment.		
Montour County		Unclassifiable/Attainment.		
Northumberland County		Unclassifiable/Attainment.		
Snyder County		Unclassifiable/Attainment.		
Somerset County		Unclassifiable/Attainment.		
Union County		Unclassifiable/Attainment.		
AQCR 196 South Central Pennsylvania Intrastate:				

PENNSYLVANIA—1997 ANNUAL $PM_{2.5}$ NAAQS—Continued

[Primary and secondary]

Designated area	Designation [a]		Classification	
	Date [1]	Type	Date [2]	Type
Adams County		Unclassifiable/Attainment.		
Franklin County		Unclassifiable/Attainment.		
Perry County		Unclassifiable/Attainment.		
AQCR 197 Southwest Pennsylvania Intrastate:				
Armstrong County (remainder)		Unclassifiable/Attainment.		
Fayette County		Unclassifiable/Attainment.		
Greene County (remainder)		Unclassifiable/Attainment.		
Indiana County (remainder)		Unclassifiable/Attainment.		

[a] Includes Indian Country located in each county or area, except as otherwise specified.
[1] This date is 90 days after January 5, 2005, unless otherwise noted.
[2] This date is July 2, 2014, unless otherwise noted.

PENNSYLVANIA—1997 24-HOUR $PM_{2.5}$ NAAQS

[Primary and secondary]

Designated area	Designation [a]		Classification	
	Date [1]	Type	Date	Type
Allentown, PA:				
Lehigh County		Unclassifiable/Attainment.		
Northampton County		Unclassifiable/Attainment.		
Harrisburg-Lebanon-Carlisle-York, PA:				
Cumberland County		Unclassifiable/Attainment.		
Dauphin County		Unclassifiable/Attainment.		
Lebanon County		Unclassifiable/Attainment.		
York County		Unclassifiable/Attainment.		
Johnstown, PA:				
Cambria County		Unclassifiable/Attainment.		
Indiana County (part)		Unclassifiable/Attainment.		
Townships of West Wheatfield, Center, East Wheatfield, and Armagh Borough and Homer City Borough				
Lancaster, PA:				
Lancaster County		Unclassifiable/Attainment.		
Liberty-Clairton, PA:				
Allegheny County (part)		Unclassifiable/Attainment.		
Lincoln Borough, Clairton City, Glassport Borough, Liberty Borough, Port Vue Borough.				
Philadelphia-Wilmington, PA–NJ–DE:				
Bucks County		Unclassifiable/Attainment.		
Chester County		Unclassifiable/Attainment.		
Delaware County		Unclassifiable/Attainment.		
Montgomery County		Unclassifiable/Attainment.		
Philadelphia County		Unclassifiable/Attainment.		
Pittsburgh-Beaver Valley, PA:				
Allegheny County (remainder)		Unclassifiable/Attainment.		
Armstrong County (part)		Unclassifiable/Attainment.		
Elderton Borough and Plumcreek and Washington Townships.				
Beaver County		Unclassifiable/Attainment.		
Butler County		Unclassifiable/Attainment.		
Greene County (part)		Unclassifiable/Attainment.		
Monongahela Township.				
Lawrence County (part)		Unclassifiable/Attainment.		
Township of Taylor south of New Castle City.				
Washington County		Unclassifiable/Attainment.		
Westmoreland County		Unclassifiable/Attainment.		
Youngstown-Warren-Sharon, OH–PA:				
Mercer County		Unclassifiable/Attainment.		
Rest of State:				
AQCR 151 Northeast Pennsylvania-Upper Delaware Valley Interstate:				
Berks County		Unclassifiable/Attainment.		
Bradford County		Unclassifiable/Attainment.		
Carbon County		Unclassifiable/Attainment.		
Lackawanna County		Unclassifiable/Attainment.		
Luzerne County		Unclassifiable/Attainment.		

PENNSYLVANIA—1997 24-HOUR $PM_{2.5}$ NAAQS—Continued

[Primary and secondary]

Designated area	Designation [a]		Classification	
	Date [1]	Type	Date	Type
Monroe County		Unclassifiable/Attainment.		
Pike County		Unclassifiable/Attainment.		
Schuylkill County		Unclassifiable/Attainment.		
Sullivan County		Unclassifiable/Attainment.		
Susquehanna County		Unclassifiable/Attainment.		
Tioga County		Unclassifiable/Attainment.		
Wayne County		Unclassifiable/Attainment.		
Wyoming County		Unclassifiable/Attainment.		
AQCR 178 Northwest Pennsylvania-Youngstown Interstate:				
Cameron County		Unclassifiable/Attainment.		
Clarion County		Unclassifiable/Attainment.		
Clearfield County		Unclassifiable/Attainment.		
Crawford County		Unclassifiable/Attainment.		
Elk County		Unclassifiable/Attainment.		
Erie County		Unclassifiable/Attainment.		
Forest County		Unclassifiable/Attainment.		
Jefferson County		Unclassifiable/Attainment.		
Lawrence County (remainder)		Unclassifiable/Attainment.		
McKean County		Unclassifiable/Attainment.		
Potter County		Unclassifiable/Attainment.		
Venango County		Unclassifiable/Attainment.		
Warren County		Unclassifiable/Attainment.		
AQCR 195 Central Pennsylvania Intrastate:				
Bedford County		Unclassifiable/Attainment.		
Blair County		Unclassifiable/Attainment.		
Centre County		Unclassifiable/Attainment.		
Clinton County		Unclassifiable/Attainment.		
Columbia County		Unclassifiable/Attainment.		
Fulton County		Unclassifiable/Attainment.		
Huntingdon County		Unclassifiable/Attainment.		
Juniata County		Unclassifiable/Attainment.		
Lycoming County		Unclassifiable/Attainment.		
Mifflin County		Unclassifiable/Attainment.		
Montour County		Unclassifiable/Attainment.		
Northumberland County		Unclassifiable/Attainment.		
Snyder County		Unclassifiable/Attainment.		
Somerset County		Unclassifiable/Attainment.		
Union County		Unclassifiable/Attainment.		
AQCR 196 South Central Pennsylvania Intrastate:				
Adams County		Unclassifiable/Attainment.		
Franklin County		Unclassifiable/Attainment.		
Perry County		Unclassifiable/Attainment.		
AQCR 197 Southwest Pennsylvania Intrastate:				
Armstrong County (remainder)		Unclassifiable/Attainment.		
Fayette County		Unclassifiable/Attainment.		
Greene County (remainder)		Unclassifiable/Attainment.		
Indiana County (remainder)		Unclassifiable/Attainment.		

[a] Includes Indian Country located in each county or area, except as otherwise specified.
[1] This date is 90 days after January 5, 2005, unless otherwise noted.

PENNSYLVANIA—2006 24-HOUR $PM_{2.5}$ NAAQS

[Primary and secondary]

Designated area	Designation [a]		Classification	
	Date [1]	Type	Date [2]	Type
Allentown, PA:				
Lehigh County		Nonattainment		Moderate.
Northampton County		Nonattainment		Moderate.
Harrisburg-Lebanon-Carlisle-York, PA:				
Cumberland County		Nonattainment		Moderate.
Dauphin County		Nonattainment		Moderate.
Lebanon County		Nonattainment		Moderate.
York County		Nonattainment		Moderate.
Johnstown, PA:				
Cambria County		Nonattainment		Moderate.
Indiana County (part)		Nonattainment		Moderate.

PENNSYLVANIA—2006 24-HOUR $PM_{2.5}$ NAAQS—Continued

[Primary and secondary]

Designated area	Designation [a]		Classification	
	Date [1]	Type	Date [2]	Type
Townships of West Wheatfield, Center, East Wheatfield, and Armagh Borough and Homer City Borough.				
Lancaster, PA:				
Lancaster County		Nonattainment		Moderate.
Liberty-Clairton, PA:				
Allegheny County (part)		Nonattainment		Moderate.
Lincoln Borough, Clairton City, Glassport Borough, Liberty Borough, Port Vue Borough.				
Philadelphia-Wilmington, PA–NJ–DE:				
Bucks County		Nonattainment		Moderate.
Chester County		Nonattainment		Moderate.
Delaware County		Nonattainment		Moderate.
Montgomery County		Nonattainment		Moderate.
Philadelphia County		Nonattainment		Moderate.
Pittsburgh-Beaver Valley, PA:				
Allegheny County (remainder)		Nonattainment		Moderate.
Armstrong County (part)		Nonattainment		Moderate.
Elderton Borough and Plumcreek and Washington Townships.				
Beaver County		Nonattainment		Moderate.
Butler County		Nonattainment		Moderate.
Greene County (part)		Nonattainment		Moderate.
Monongahela Township.				
Lawrence County (part)		Nonattainment		Moderate.
Township of Taylor south of New Castle City.				
Washington County		Nonattainment		Moderate.
Westmoreland County		Nonattainment		Moderate.
Youngstown-Warren-Sharon, OH–PA:				
Mercer County			Unclassifiable Attainment.	
Rest of State:				
AQCR 151 Northeast Pennsylvania-Upper Delaware Valley Interstate:				
Berks County			Unclassifiable Attainment.	
Bradford County			Unclassifiable Attainment.	
Carbon County			Unclassifiable Attainment.	
Lackawanna County			Unclassifiable Attainment.	
Luzerne County			Unclassifiable Attainment.	
Monroe County			Unclassifiable Attainment.	
Pike County			Unclassifiable Attainment.	
Schuylkill County			Unclassifiable Attainment.	
Sullivan County			Unclassifiable Attainment.	
Susquehanna County			Unclassifiable Attainment.	
Tioga County			Unclassifiable Attainment.	
Wayne County			Unclassifiable Attainment.	
Wyoming County			Unclassifiable Attainment.	
AQCR 178 Northwest Pennsylvania-Youngstown Interstate:				
Cameron County			Unclassifiable Attainment.	
Clarion County			Unclassifiable Attainment.	
Clearfield County			Unclassifiable Attainment.	
Crawford County			Unclassifiable Attainment.	

PENNSYLVANIA—2006 24-HOUR $PM_{2.5}$ NAAQS—Continued

[Primary and secondary]

Designated area	Designation [a]		Classification	
	Date [1]	Type	Date [2]	Type
Elk County			Unclassifiable Attainment.	
Erie County			Unclassifiable Attainment.	
Forest County			Unclassifiable Attainment.	
Jefferson County			Unclassifiable Attainment.	
Lawrence County (remainder)			Unclassifiable Attainment.	
McKean County			Unclassifiable Attainment.	
Potter County			Unclassifiable Attainment.	
Venango County			Unclassifiable Attainment.	
Warren County			Unclassifiable Attainment.	
AQCR 195 Central Pennsylvania Intrastate:				
Bedford County			Unclassifiable Attainment.	
Blair County			Unclassifiable Attainment.	
Centre County			Unclassifiable Attainment.	
Clinton County			Unclassifiable Attainment.	
Columbia County			Unclassifiable Attainment.	
Fulton County			Unclassifiable Attainment.	
Huntingdon County			Unclassifiable Attainment.	
Juniata County			Unclassifiable Attainment.	
Lycoming County			Unclassifiable Attainment.	
Mifflin County			Unclassifiable Attainment.	
Montour County			Unclassifiable Attainment.	
Northumberland County			Unclassifiable Attainment.	
Snyder County			Unclassifiable Attainment.	
Somerset County			Unclassifiable Attainment.	
Union County			Unclassifiable Attainment.	
AQCR 196 South Central Pennsylvania Intrastate:				
Adams County			Unclassifiable Attainment.	
Franklin County			Unclassifiable Attainment.	
Perry County			Unclassifiable Attainment.	
AQCR 197 Southwest Pennsylvania Intrastate:				
Armstrong County (remainder)			Unclassifiable Attainment.	
Fayette County			Unclassifiable Attainment.	
Greene County (remainder)			Unclassifiable Attainment.	
Indiana County (remainder)			Unclassifiable Attainment.	

[a] Includes Indian Country located in each county or area, except as otherwise specified.
[1] This date is 30 days after November 13, 2009, unless otherwise noted.
[2] This date is July 2, 2014, unless otherwise noted.

* * * * *

■ 41. Section 81.340 is amended as follows:

■ a. By removing the tables titled ''Rhode Island—$PM_{2.5}$ (Annual NAAQS)'' and ''Rhode Island—$PM_{2.5}$ [24-hour NAAQS]''.

■ b. By adding three tables titled ''Rhode Island—1997 Annual $PM_{2.5}$ NAAQS (Primary and Secondary)'' and ''Rhode Island—1997 24-hour $PM_{2.5}$ NAAQS (Primary and Secondary)'' and ''Rhode Island—2006 24-hour $PM_{2.5}$ NAAQS (Primary and Secondary)'' before the table titled ''Rhode Island—NO_2 (1971 Annual Standard)''.

The additions read as follows:

§ 81.340 Rhode Island.

* * * * *

RHODE ISLAND—1997 ANNUAL $PM_{2.5}$ NAAQS

[Primary and secondary]

Designated area	Designation [a]		Classification	
	Date [1]	Type	Date	Type
Statewide:				
Bristol County		Unclassifiable/Attainment.		
Kent County		Unclassifiable/Attainment.		
Newport County		Unclassifiable/Attainment.		
Providence County		Unclassifiable/Attainment.		
Washington County		Unclassifiable/Attainment.		

[a] Includes Indian Country located in each county or area, except as otherwise specified.
[1] This date is 90 days after January 5, 2005, unless otherwise noted.

RHODE ISLAND—1997 24-HOUR $PM_{2.5}$ NAAQS

[Primary and secondary]

Designated area	Designation [a]		Classification	
	Date [1]	Type	Date	Type
Statewide:				
Bristol County		Unclassifiable/Attainment.		
Kent County		Unclassifiable/Attainment.		
Newport County		Unclassifiable/Attainment.		
Providence County		Unclassifiable/Attainment.		
Washington County		Unclassifiable/Attainment.		

[a] Includes Indian Country located in each county or area, except as otherwise specified.
[1] This date is 90 days after January 5, 2005, unless otherwise noted.

RHODE ISLAND—2006 24-HOUR $PM_{2.5}$ NAAQS

[Primary and secondary]

Designated area	Designation [a]		Classification	
	Date [1]	Type	Date	Type
Statewide:				
Bristol County		Unclassifiable/Attainment.		
Kent County		Unclassifiable/Attainment.		
Newport County		Unclassifiable/Attainment.		
Providence County		Unclassifiable/Attainment.		
Washington County		Unclassifiable/Attainment.		

[a] Includes Indian Country located in each county or area, except as otherwise specified.
[1] This date is 30 days after November 13, 2009, unless otherwise noted.

* * * * *

■ 42. Section 81.341 is amended as follows:

■ a. By removing the tables titled ''South Carolina—$PM_{2.5}$ (Annual NAAQS)'' and ''South Carolina—$PM_{2.5}$ [24-hour NAAQS]''.

■ b. By adding three tables titled ''South Carolina—1997 Annual $PM_{2.5}$ NAAQS (Primary and Secondary)'' and ''South Carolina—1997 24-hour $PM_{2.5}$ NAAQS (Primary and Secondary)'' and ''South Carolina—2006 24-hour $PM_{2.5}$ NAAQS (Primary and Secondary)'' before the table titled ''South Carolina—NO_2 (1971 Annual Standard)''.

The additions read as follows:

§ 81.341 South Carolina.

* * * * *

SOUTH CAROLINA—1997 ANNUAL $PM_{2.5}$ NAAQS

[Primary and secondary]

Designated area	Designation [a]		Classification	
	Date [1]	Type	Date	Type
Greenville-Spartanburg, SC:				
Anderson County		Unclassifiable.		
Greenville County		Unclassifiable.		
Spartanburg County		Unclassifiable.		
Rest of State:				
Abbeville County		Unclassifiable/Attainment.		
Aiken County		Unclassifiable/Attainment.		
Allendale County		Unclassifiable/Attainment.		
Bamberg County		Unclassifiable/Attainment.		
Barnwell County		Unclassifiable/Attainment.		
Beaufort County		Unclassifiable/Attainment.		
Berkeley County		Unclassifiable/Attainment.		
Calhoun County		Unclassifiable/Attainment.		
Charleston County		Unclassifiable/Attainment.		
Cherokee County		Unclassifiable/Attainment.		
Chester County		Unclassifiable/Attainment.		
Chesterfield County		Unclassifiable/Attainment.		
Clarendon County		Unclassifiable/Attainment.		
Colleton County		Unclassifiable/Attainment.		
Darlington County		Unclassifiable/Attainment.		
Dillon County		Unclassifiable/Attainment.		
Dorchester County		Unclassifiable/Attainment.		
Edgefield County		Unclassifiable/Attainment.		
Fairfield County		Unclassifiable/Attainment.		
Florence County.				
Georgetown County		Unclassifiable/Attainment.		
Greenwood County		Unclassifiable/Attainment.		
Hampton County		Unclassifiable/Attainment.		
Horry County		Unclassifiable/Attainment.		
Jasper County		Unclassifiable/Attainment.		
Kershaw County		Unclassifiable/Attainment.		
Lancaster County		Unclassifiable/Attainment.		
Laurens County		Unclassifiable/Attainment.		
Lee County		Unclassifiable/Attainment.		
Lexington County		Unclassifiable/Attainment.		
McCormick County		Unclassifiable/Attainment.		
Marion County		Unclassifiable/Attainment.		
Marlboro County		Unclassifiable/Attainment.		
Newberry County		Unclassifiable/Attainment.		
Oconee County		Unclassifiable/Attainment.		
Orangeburg County		Unclassifiable/Attainment.		
Pickens County		Unclassifiable/Attainment.		
Richland County		Unclassifiable/Attainment.		
Saluda County		Unclassifiable/Attainment.		
Sumter County		Unclassifiable/Attainment.		
Union County		Unclassifiable/Attainment.		
Williamsburg County		Unclassifiable/Attainment.		
York County		Unclassifiable/Attainment.		

[a] Includes Indian Country located in each county or area, except as otherwise specified.
[1] This date is 90 days after January 5, 2005, unless otherwise noted.

SOUTH CAROLINA—1997 24-HOUR $PM_{2.5}$ NAAQS

[Primary and secondary]

Designated area	Designation [a]		Classification	
	Date [1]	Type	Date	Type
Statewide:				
Abbeville County		Unclassifiable/Attainment.		
Aiken County		Unclassifiable/Attainment.		
Allendale County		Unclassifiable/Attainment.		
Anderson County		Unclassifiable/Attainment.		
Bamberg County		Unclassifiable/Attainment.		
Barnwell County		Unclassifiable/Attainment.		
Beaufort County		Unclassifiable/Attainment.		
Berkeley County		Unclassifiable/Attainment.		
Calhoun County		Unclassifiable/Attainment.		

SOUTH CAROLINA—1997 24-HOUR $PM_{2.5}$ NAAQS—Continued

[Primary and secondary]

Designated area	Designation [a]		Classification	
	Date [1]	Type	Date	Type
Charleston County		Unclassifiable/Attainment.		
Cherokee County		Unclassifiable/Attainment.		
Chester County		Unclassifiable/Attainment.		
Chesterfield County		Unclassifiable/Attainment.		
Clarendon County		Unclassifiable/Attainment.		
Colleton County		Unclassifiable/Attainment.		
Darlington County		Unclassifiable/Attainment.		
Dillon County		Unclassifiable/Attainment.		
Dorchester County		Unclassifiable/Attainment.		
Edgefield County		Unclassifiable/Attainment.		
Fairfield County		Unclassifiable/Attainment.		
Florence County		Unclassifiable/Attainment.		
Georgetown County		Unclassifiable/Attainment.		
Greenwood County		Unclassifiable/Attainment.		
Greenville County		Unclassifiable/Attainment.		
Hampton County		Unclassifiable/Attainment.		
Horry County		Unclassifiable/Attainment.		
Jasper County		Unclassifiable/Attainment.		
Kershaw County		Unclassifiable/Attainment.		
Lancaster County		Unclassifiable/Attainment.		
Laurens County		Unclassifiable/Attainment.		
Lee County		Unclassifiable/Attainment.		
Lexington County		Unclassifiable/Attainment.		
McCormick County		Unclassifiable/Attainment.		
Marion County		Unclassifiable/Attainment.		
Marlboro County		Unclassifiable/Attainment.		
Newberry County		Unclassifiable/Attainment.		
Oconee County		Unclassifiable/Attainment.		
Orangeburg County		Unclassifiable/Attainment.		
Pickens County		Unclassifiable/Attainment.		
Richland County		Unclassifiable/Attainment.		
Saluda County		Unclassifiable/Attainment.		
Spartanburg County		Unclassifiable/Attainment.		
Sumter County		Unclassifiable/Attainment.		
Union County		Unclassifiable/Attainment.		
Williamsburg County		Unclassifiable/Attainment.		
York County		Unclassifiable/Attainment.		

[a] Includes Indian Country located in each county or area, except as otherwise specified.
[1] This date is 90 days after January 5, 2005, unless otherwise noted.

SOUTH CAROLINA—2006 24-HOUR $PM_{2.5}$ NAAQS

[Primary and secondary]

Designated area	Designation [a]		Classification	
	Date [1]	Type	Date	Type
Statewide:				
Abbeville County		Unclassifiable/Attainment.		
Aiken County		Unclassifiable/Attainment.		
Allendale County		Unclassifiable/Attainment.		
Anderson County		Unclassifiable/Attainment.		
Bamberg County		Unclassifiable/Attainment.		
Barnwell County		Unclassifiable/Attainment.		
Beaufort County		Unclassifiable/Attainment.		
Berkeley County		Unclassifiable/Attainment.		
Calhoun County		Unclassifiable/Attainment.		
Charleston County		Unclassifiable/Attainment.		
Cherokee County		Unclassifiable/Attainment.		
Chester County		Unclassifiable/Attainment.		
Chesterfield County		Unclassifiable/Attainment.		
Clarendon County		Unclassifiable/Attainment.		
Colleton County		Unclassifiable/Attainment.		
Darlington County		Unclassifiable/Attainment.		
Dillon County		Unclassifiable/Attainment.		
Dorchester County		Unclassifiable/Attainment.		
Edgefield County		Unclassifiable/Attainment.		
Fairfield County		Unclassifiable/Attainment.		

SOUTH CAROLINA—2006 24-HOUR $PM_{2.5}$ NAAQS—Continued

[Primary and secondary]

Designated area	Designation [a]		Classification	
	Date [1]	Type	Date	Type
Florence County		Unclassifiable/Attainment.		
Georgetown County		Unclassifiable/Attainment.		
Greenwood County		Unclassifiable/Attainment.		
Greenville County		Unclassifiable/Attainment.		
Hampton County		Unclassifiable/Attainment.		
Horry County		Unclassifiable/Attainment.		
Jasper County		Unclassifiable/Attainment.		
Kershaw County		Unclassifiable/Attainment.		
Lancaster County		Unclassifiable/Attainment.		
Laurens County		Unclassifiable/Attainment.		
Lee County		Unclassifiable/Attainment.		
Lexington County		Unclassifiable/Attainment.		
McCormick County		Unclassifiable/Attainment.		
Marion County		Unclassifiable/Attainment.		
Marlboro County		Unclassifiable/Attainment.		
Newberry County		Unclassifiable/Attainment.		
Oconee County		Unclassifiable/Attainment.		
Orangeburg County		Unclassifiable/Attainment.		
Pickens County		Unclassifiable/Attainment.		
Richland County		Unclassifiable/Attainment.		
Saluda County		Unclassifiable/Attainment.		
Spartanburg County		Unclassifiable/Attainment.		
Sumter County		Unclassifiable/Attainment.		
Union County		Unclassifiable/Attainment.		
Williamsburg County		Unclassifiable/Attainment.		
York County		Unclassifiable/Attainment.		

[a] Includes Indian Country located in each county or area, except as otherwise specified.
[1] This date is 30 days after November 13, 2009, unless otherwise noted.

* * * * *

■ 43. Section 81.342 is amended as follows:

■ a. By removing the tables titled ''South Dakota—$PM_{2.5}$ (Annual NAAQS)'' and ''South Dakota—$PM_{2.5}$ [24-hour NAAQS]''.

■ b. By adding three tables titled ''South Dakota—1997 Annual $PM_{2.5}$ NAAQS (Primary and Secondary)'' and ''South Dakota—1997 24-hour $PM_{2.5}$ NAAQS (Primary and Secondary)'' and ''South Dakota—2006 24-hour $PM_{2.5}$ NAAQS (Primary and Secondary)'' before the table titled ''South Dakota—NO_2 (1971 Annual Standard)''.

The additions read as follows:

§ 81.342 South Dakota.

* * * * *

SOUTH DAKOTA—1997 ANNUAL $PM_{2.5}$ NAAQS

[Primary and secondary]

Designated area	Designation [a]		Classification	
	Date [1]	Type	Date	Type
Statewide:				
Aurora County		Unclassifiable/Attainment.		
Beadle County		Unclassifiable/Attainment.		
Bennett County		Unclassifiable/Attainment.		
Bon Homme County		Unclassifiable/Attainment.		
Brookings County		Unclassifiable/Attainment.		
Brown County		Unclassifiable/Attainment.		
Brule County		Unclassifiable/Attainment.		
Buffalo County		Unclassifiable/Attainment.		
Butte County		Unclassifiable/Attainment.		
Campbell County		Unclassifiable/Attainment.		
Charles Mix County		Unclassifiable/Attainment.		
Clark County		Unclassifiable/Attainment.		
Clay County		Unclassifiable/Attainment.		
Codington County		Unclassifiable/Attainment.		
Corson County		Unclassifiable/Attainment.		
Custer County		Unclassifiable/Attainment.		
Davison County		Unclassifiable/Attainment.		
Day County		Unclassifiable/Attainment.		
Deuel County		Unclassifiable/Attainment.		
Dewey County		Unclassifiable/Attainment.		
Douglas County		Unclassifiable/Attainment.		

SOUTH DAKOTA—1997 ANNUAL $PM_{2.5}$ NAAQS—Continued

[Primary and secondary]

Designated area	Designation [a]		Classification	
	Date [1]	Type	Date	Type
Edmunds County		Unclassifiable/Attainment.		
Fall River County		Unclassifiable/Attainment.		
Faulk County		Unclassifiable/Attainment.		
Grant County		Unclassifiable/Attainment.		
Gregory County		Unclassifiable/Attainment.		
Haakon County		Unclassifiable/Attainment.		
Hamlin County		Unclassifiable/Attainment.		
Hand County		Unclassifiable/Attainment.		
Hanson County		Unclassifiable/Attainment.		
Harding County		Unclassifiable/Attainment.		
Hughes County		Unclassifiable/Attainment.		
Hutchinson County		Unclassifiable/Attainment.		
Hyde County		Unclassifiable/Attainment.		
Jackson County		Unclassifiable/Attainment.		
Jerauld County		Unclassifiable/Attainment.		
Jones County		Unclassifiable/Attainment.		
Kingsbury County		Unclassifiable/Attainment.		
Lake County		Unclassifiable/Attainment.		
Lawrence County		Unclassifiable/Attainment.		
Lincoln County		Unclassifiable/Attainment.		
Lyman County		Unclassifiable/Attainment.		
McCook County		Unclassifiable/Attainment.		
McPherson County		Unclassifiable/Attainment.		
Marshall County		Unclassifiable/Attainment.		
Meade County		Unclassifiable/Attainment.		
Mellette County		Unclassifiable/Attainment.		
Miner County		Unclassifiable/Attainment.		
Minnehaha County		Unclassifiable/Attainment.		
Moody County		Unclassifiable/Attainment.		
Pennington County		Unclassifiable/Attainment.		
Perkins County		Unclassifiable/Attainment.		
Potter County		Unclassifiable/Attainment.		
Roberts County		Unclassifiable/Attainment.		
Sanborn County		Unclassifiable/Attainment.		
Shannon County		Unclassifiable/Attainment.		
Spink County		Unclassifiable/Attainment.		
Stanley County		Unclassifiable/Attainment.		
Sully Count		Unclassifiable/Attainment.		
Todd County		Unclassifiable/Attainment.		
Tripp County		Unclassifiable/Attainment.		
Turner County		Unclassifiable/Attainment.		
Union County		Unclassifiable/Attainment.		
Walworth County		Unclassifiable/Attainment.		
Yankton County		Unclassifiable/Attainment.		
Ziebach County		Unclassifiable/Attainment.		

[a] Includes Indian Country located in each county or area, except as otherwise specified.
[1] This date is 90 days after January 5, 2005, unless otherwise noted.

SOUTH DAKOTA—1997 24-HOUR $PM_{2.5}$ NAAQS

[Primary and secondary]

Designated area	Designation [a]		Classification	
	Date [1]	Type	Date	Type
Statewide:				
Aurora County		Unclassifiable/Attainment.		
Beadle County		Unclassifiable/Attainment.		
Bennett County		Unclassifiable/Attainment.		
Bon Homme County		Unclassifiable/Attainment.		
Brookings County		Unclassifiable/Attainment.		
Brown County		Unclassifiable/Attainment.		
Brule County		Unclassifiable/Attainment.		
Buffalo County		Unclassifiable/Attainment.		
Butte County		Unclassifiable/Attainment.		
Campbell County		Unclassifiable/Attainment.		
Charles Mix County		Unclassifiable/Attainment.		
Clark County		Unclassifiable/Attainment.		

SOUTH DAKOTA—1997 24-HOUR $PM_{2.5}$ NAAQS—Continued

[Primary and secondary]

Designated area	Designation [a]		Classification	
	Date [1]	Type	Date	Type
Clay County		Unclassifiable/Attainment.		
Codington County		Unclassifiable/Attainment.		
Croson County		Unclassifiable/Attainment.		
Custer County		Unclassifiable/Attainment.		
Davison County		Unclassifiable/Attainment.		
Day County		Unclassifiable/Attainment.		
Deuel County		Unclassifiable/Attainment.		
Dewey County		Unclassifiable/Attainment.		
Douglas County		Unclassifiable/Attainment.		
Edmunds County		Unclassifiable/Attainment.		
Fall River County		Unclassifiable/Attainment.		
Faulk County		Unclassifiable/Attainment.		
Grant County		Unclassifiable/Attainment.		
Gregory County		Unclassifiable/Attainment.		
Haakon County		Unclassifiable/Attainment.		
Hamlin County		Unclassifiable/Attainment.		
Hand County		Unclassifiable/Attainment.		
Hanson County		Unclassifiable/Attainment.		
Harding County		Unclassifiable/Attainment.		
Hughes County		Unclassifiable/Attainment.		
Hutchinson County		Unclassifiable/Attainment.		
Hyde County		Unclassifiable/Attainment.		
Jackson County		Unclassifiable/Attainment.		
Jerauld County		Unclassifiable/Attainment.		
Jones County		Unclassifiable/Attainment.		
Kingsbury County		Unclassifiable/Attainment.		
Lake County		Unclassifiable/Attainment.		
Lawrence County		Unclassifiable/Attainment.		
Lincoln County		Unclassifiable/Attainment.		
Lyman County		Unclassifiable/Attainment.		
McCook County		Unclassifiable/Attainment.		
McPherson County		Unclassifiable/Attainment.		
Marshall County		Unclassifiable/Attainment.		
Meade County		Unclassifiable/Attainment.		
Mellette County		Unclassifiable/Attainment.		
Miner County		Unclassifiable/Attainment.		
Minnehaha County		Unclassifiable/Attainment.		
Moody County		Unclassifiable/Attainment.		
Pennington County		Unclassifiable/Attainment.		
Perkins County		Unclassifiable/Attainment.		
Potter County		Unclassifiable/Attainment.		
Roberts County		Unclassifiable/Attainment.		
Sanborn County		Unclassifiable/Attainment.		
Shannon County		Unclassifiable/Attainment.		
Spink County		Unclassifiable/Attainment.		
Stanley County		Unclassifiable/Attainment.		
Sully County		Unclassifiable/Attainment.		
Todd County		Unclassifiable/Attainment.		
Tripp County		Unclassifiable/Attainment.		
Turner County		Unclassifiable/Attainment.		
Union County		Unclassifiable/Attainment.		
Walworth County		Unclassifiable/Attainment.		
Yankton County		Unclassifiable/Attainment.		
Ziebach County		Unclassifiable/Attainment.		

[a] Includes Indian Country located in each county or area, except as otherwise specified.
[1] This date is 90 days after January 5, 2005, unless otherwise noted.

SOUTH DAKOTA—2006 24-HOUR $PM_{2.5}$ NAAQS

[Primary and secondary]

Designated area	Designation [a]		Classification	
	Date [1]	Type	Date	Type
Statewide:		.		
Aurora County		Unclassifiable/Attainment.		
Beadle County		Unclassifiable/Attainment.		
Bennett County		Unclassifiable/Attainment.		

SOUTH DAKOTA—2006 24-HOUR $PM_{2.5}$ NAAQS—Continued

[Primary and secondary]

Designated area	Designation [a]		Classification	
	Date [1]	Type	Date	Type
Bon Homme County		Unclassifiable/Attainment.		
Brookings County		Unclassifiable/Attainment.		
Brown County		Unclassifiable/Attainment.		
Brule County		Unclassifiable/Attainment.		
Buffalo County		Unclassifiable/Attainment.		
Butte County		Unclassifiable/Attainment.		
Campbell County		Unclassifiable/Attainment.		
Charles Mix County		Unclassifiable/Attainment.		
Clark County		Unclassifiable/Attainment.		
Clay County		Unclassifiable/Attainment.		
Codington County		Unclassifiable/Attainment.		
Croson County		Unclassifiable/Attainment.		
Custer County		Unclassifiable/Attainment.		
Davison County		Unclassifiable/Attainment.		
Day County		Unclassifiable/Attainment.		
Deuel County		Unclassifiable/Attainment.		
Dewey County		Unclassifiable/Attainment.		
Douglas County		Unclassifiable/Attainment.		
Edmunds County		Unclassifiable/Attainment.		
Fall River County		Unclassifiable/Attainment.		
Faulk County		Unclassifiable/Attainment.		
Grant County		Unclassifiable/Attainment.		
Gregory County		Unclassifiable/Attainment.		
Haakon County		Unclassifiable/Attainment.		
Hamlin County		Unclassifiable/Attainment.		
Hand County		Unclassifiable/Attainment.		
Hanson County		Unclassifiable/Attainment.		
Harding County		Unclassifiable/Attainment.		
Hughes County		Unclassifiable/Attainment.		
Hutchinson County		Unclassifiable/Attainment.		
Hyde County		Unclassifiable/Attainment.		
Jackson County		Unclassifiable/Attainment.		
Jerauld County		Unclassifiable/Attainment.		
Jones County		Unclassifiable/Attainment.		
Kingsbury County		Unclassifiable/Attainment.		
Lake County		Unclassifiable/Attainment.		
Lawrence County		Unclassifiable/Attainment.		
Lincoln County		Unclassifiable/Attainment.		
Lyman County		Unclassifiable/Attainment.		
McCook County		Unclassifiable/Attainment.		
McPherson County		Unclassifiable/Attainment.		
Marshall County		Unclassifiable/Attainment.		
Meade County		Unclassifiable/Attainment.		
Mellette County		Unclassifiable/Attainment.		
Miner County		Unclassifiable/Attainment.		
Minnehaha County		Unclassifiable/Attainment.		
Moody County		Unclassifiable/Attainment.		
Pennington County		Unclassifiable/Attainment.		
Perkins County		Unclassifiable/Attainment.		
Potter County		Unclassifiable/Attainment.		
Roberts County		Unclassifiable/Attainment.		
Sanborn County		Unclassifiable/Attainment.		
Shannon County		Unclassifiable/Attainment.		
Spink County		Unclassifiable/Attainment.		
Stanley County		Unclassifiable/Attainment.		
Sully County		Unclassifiable/Attainment.		
Todd County		Unclassifiable/Attainment.		
Tripp County		Unclassifiable/Attainment.		
Turner County		Unclassifiable/Attainment.		
Union County		Unclassifiable/Attainment.		
Walworth County		Unclassifiable/Attainment.		
Yankton County		Unclassifiable/Attainment.		
Ziebach County		Unclassifiable/Attainment.		

[a] Includes Indian Country located in each county or area, except as otherwise specified.
[1] This date is 30 days after November 13, 2009, unless otherwise noted.

* * * * *

■ 44. Section 81.343 is amended as follows:

■ a. By removing the tables titled ''Tennessee—$PM_{2.5}$ (Annual NAAQS)'' and ''Tennessee—$PM_{2.5}$ [24-hour NAAQS]''.

■ b. By adding three tables titled ''Tennessee—1997 Annual $PM_{2.5}$ NAAQS (Primary and Secondary)'' and ''Tennessee—1997 24-hour $PM_{2.5}$ NAAQS (Primary and Secondary)'' and ''Tennessee—2006 24-hour $PM_{2.5}$ NAAQS (Primary and Secondary)'' before the table titled ''Tennessee—NO_2 (1971 Annual Standard)''.

The additions read as follows:

§ 81.343 Tennessee.

* * * * *

TENNESSEE—1997 ANNUAL $PM_{2.5}$ NAAQS

[Primary and secondary]

Designated area	Designation [a]		Classification	
	Date [1]	Type	Date [2]	Type
Chattanooga, TN–GA:				
Hamilton County		Nonattainment		Moderate.
Knoxville, TN:				
Anderson County		Nonattainment		Moderate.
Blount County		Nonattainment		Moderate.
Knox County		Nonattainment		Moderate.
Loudon County		Nonattainment		Moderate.
Roane County (part)		Nonattainment		Moderate.
The area described by U.S. Census 2000 block group identifier 47–145–0307–2.				
Rest of State:				
Bedford County		Unclassifiable/Attainment.		
Benton County		Unclassifiable/Attainment.		
Bledsoe County		Unclassifiable/Attainment.		
Bradley County		Unclassifiable/Attainment.		
Campbell County		Unclassifiable/Attainment.		
Cannon County		Unclassifiable/Attainment.		
Carroll County		Unclassifiable/Attainment.		
Carter County		Unclassifiable/Attainment.		
Cheatham County		Unclassifiable/Attainment.		
Chester County		Unclassifiable/Attainment.		
Claiborne County		Unclassifiable/Attainment.		
Clay County		Unclassifiable/Attainment.		
Cocke County		Unclassifiable/Attainment.		
Coffee County		Unclassifiable/Attainment.		
Crockett County		Unclassifiable/Attainment.		
Cumberland County		Unclassifiable/Attainment.		
Davidson County		Unclassifiable/Attainment.		
Decatur County		Unclassifiable/Attainment.		
DeKalb County		Unclassifiable/Attainment.		
Dickson County		Unclassifiable/Attainment.		
Dyer County		Unclassifiable/Attainment.		
Fayette County		Unclassifiable/Attainment.		
Fentress County		Unclassifiable/Attainment.		
Franklin County		Unclassifiable/Attainment.		
Gibson County		Unclassifiable/Attainment.		
Giles County		Unclassifiable/Attainment.		
Grainger County		Unclassifiable/Attainment.		
Greene County		Unclassifiable/Attainment.		
Grundy County		Unclassifiable/Attainment.		
Hamblen County		Unclassifiable/Attainment.		
Hancock County		Unclassifiable/Attainment.		
Hardeman County		Unclassifiable/Attainment.		
Hardin County		Unclassifiable/Attainment.		
Hawkins County		Unclassifiable/Attainment.		
Haywood County		Unclassifiable/Attainment.		
Henderson County		Unclassifiable/Attainment.		
Henry County		Unclassifiable/Attainment.		
Hickman County		Unclassifiable/Attainment.		
Houston County		Unclassifiable/Attainment.		
Humphreys County		Unclassifiable/Attainment.		
Jackson County		Unclassifiable/Attainment.		
Jefferson County		Unclassifiable/Attainment.		
Johnson County		Unclassifiable/Attainment.		
Lake County		Unclassifiable/Attainment.		
Lauderdale County		Unclassifiable/Attainment.		
Lawrence County		Unclassifiable/Attainment.		
Lewis County		Unclassifiable/Attainment.		
Lincoln County		Unclassifiable/Attainment.		
McMinn County		Unclassifiable/Attainment.		

TENNESSEE—1997 ANNUAL $PM_{2.5}$ NAAQS—Continued

[Primary and secondary]

Designated area	Designation [a]		Classification	
	Date [1]	Type	Date [2]	Type
McNairy County		Unclassifiable/Attainment.		
Macon County		Unclassifiable/Attainment.		
Madison County		Unclassifiable/Attainment.		
Marion County		Unclassifiable/Attainment.		
Marshall County		Unclassifiable/Attainment.		
Maury County		Unclassifiable/Attainment.		
Meigs County		Unclassifiable/Attainment.		
Monroe County		Unclassifiable/Attainment.		
Montgomery County		Unclassifiable/Attainment.		
Moore County		Unclassifiable/Attainment.		
Morgan County		Unclassifiable/Attainment.		
Obion County		Unclassifiable/Attainment.		
Overton County		Unclassifiable/Attainment.		
Perry County		Unclassifiable/Attainment.		
Pickett County		Unclassifiable/Attainment.		
Polk County		Unclassifiable/Attainment.		
Putnam County		Unclassifiable/Attainment.		
Rhea County		Unclassifiable/Attainment.		
Roane County (remainder)		Unclassifiable/Attainment.		
Robertson County		Unclassifiable/Attainment.		
Rutherford County		Unclassifiable/Attainment.		
Scott County		Unclassifiable/Attainment.		
Sequatchie County		Unclassifiable/Attainment.		
Sevier County		Unclassifiable/Attainment.		
Shelby County		Unclassifiable/Attainment.		
Smith County		Unclassifiable/Attainment.		
Stewart County		Unclassifiable/Attainment.		
Sullivan County		Unclassifiable/Attainment.		
Sumner County		Unclassifiable/Attainment.		
Tipton County		Unclassifiable/Attainment.		
Trousdale County		Unclassifiable/Attainment.		
Unicoi County		Unclassifiable/Attainment.		
Union County		Unclassifiable/Attainment.		
Van Buren County		Unclassifiable/Attainment.		
Warren County		Unclassifiable/Attainment.		
Washington County		Unclassifiable/Attainment.		
Wayne County		Unclassifiable/Attainment.		
Weakley County		Unclassifiable/Attainment.		
White County		Unclassifiable/Attainment.		
Williamson County		Unclassifiable/Attainment.		
Wilson County		Unclassifiable/Attainment.		

[a] Includes Indian Country located in each county or area, except as otherwise specified.
[1] This date is 90 days after January 5, 2005, unless otherwise noted.
[2] This date is July 2, 2014, unless otherwise noted.

TENNESSEE—1997 24-HOUR $PM_{2.5}$ NAAQS

[Primary and secondary]

Designated area	Designation [a]		Classification	
	Date [1]	Type	Date	Type
Statewide:				
Anderson County		Unclassifiable/Attainment.		
Bedford County		Unclassifiable/Attainment.		
Benton County		Unclassifiable/Attainment.		
Bledsoe County		Unclassifiable/Attainment.		
Blount County		Unclassifiable/Attainment.		
Bradley County		Unclassifiable/Attainment.		
Campbell County		Unclassifiable/Attainment.		
Cannon County		Unclassifiable/Attainment.		
Carroll County		Unclassifiable/Attainment.		
Carter County		Unclassifiable/Attainment.		
Cheatham County		Unclassifiable/Attainment.		
Chester County		Unclassifiable/Attainment.		
Claiborne County		Unclassifiable/Attainment.		
Clay County		Unclassifiable/Attainment.		
Cocke County		Unclassifiable/Attainment.		

TENNESSEE—1997 24-HOUR $PM_{2.5}$ NAAQS—Continued

[Primary and secondary]

Designated area	Designation [a]		Classification	
	Date [1]	Type	Date	Type
Coffee County		Unclassifiable/Attainment.		
Crockett County		Unclassifiable/Attainment.		
Cumberland County		Unclassifiable/Attainment.		
Davidson County		Unclassifiable/Attainment.		
Decatur County		Unclassifiable/Attainment.		
DeKalb County		Unclassifiable/Attainment.		
Dickson County		Unclassifiable/Attainment.		
Dyer County		Unclassifiable/Attainment.		
Fayette County		Unclassifiable/Attainment.		
Fentress County		Unclassifiable/Attainment.		
Franklin County		Unclassifiable/Attainment.		
Gibson County		Unclassifiable/Attainment.		
Giles County		Unclassifiable/Attainment.		
Grainger County		Unclassifiable/Attainment.		
Greene County		Unclassifiable/Attainment.		
Grundy County		Unclassifiable/Attainment.		
Hamblen County		Unclassifiable/Attainment.		
Hamilton County		Unclassifiable/Attainment.		
Hancock County		Unclassifiable/Attainment.		
Hardeman County		Unclassifiable/Attainment.		
Hardin County		Unclassifiable/Attainment.		
Hawkins County		Unclassifiable/Attainment.		
Haywood County		Unclassifiable/Attainment.		
Henderson County		Unclassifiable/Attainment.		
Henry County		Unclassifiable/Attainment.		
Hickman County		Unclassifiable/Attainment.		
Houston County		Unclassifiable/Attainment.		
Humphreys County		Unclassifiable/Attainment.		
Jackson County		Unclassifiable/Attainment.		
Jefferson County		Unclassifiable/Attainment.		
Johnson County		Unclassifiable/Attainment.		
Knox County		Unclassifiable/Attainment.		
Lake County		Unclassifiable/Attainment.		
Lauderdale County		Unclassifiable/Attainment.		
Lawrence County		Unclassifiable/Attainment.		
Lewis County		Unclassifiable/Attainment.		
Lincoln County		Unclassifiable/Attainment.		
Loudon County		Unclassifiable/Attainment.		
McMinn County		Unclassifiable/Attainment.		
McNairy County		Unclassifiable/Attainment.		
Macon County		Unclassifiable/Attainment.		
Madison County		Unclassifiable/Attainment.		
Marion County		Unclassifiable/Attainment.		
Marshall County		Unclassifiable/Attainment.		
Maury County		Unclassifiable/Attainment.		
Meigs County		Unclassifiable/Attainment.		
Monroe County		Unclassifiable/Attainment.		
Montgomery County		Unclassifiable/Attainment.		
Moore County		Unclassifiable/Attainment.		
Morgan County		Unclassifiable/Attainment.		
Obion County		Unclassifiable/Attainment.		
Overton County		Unclassifiable/Attainment.		
Perry County		Unclassifiable/Attainment.		
Pickett County		Unclassifiable/Attainment.		
Polk County		Unclassifiable/Attainment.		
Putnam County		Unclassifiable/Attainment.		
Rhea County		Unclassifiable/Attainment.		
Roane County		Unclassifiable/Attainment.		
The area described by U.S. Census 2000 block group identifier 47–145–0307–2.				
Robertson County		Unclassifiable/Attainment.		
Rutherford County		Unclassifiable/Attainment.		
Scott County		Unclassifiable/Attainment.		
Sequatchie County		Unclassifiable/Attainment.		
Sevier County		Unclassifiable/Attainment.		
Shelby County		Unclassifiable/Attainment.		
Smith County		Unclassifiable/Attainment.		
Stewart County		Unclassifiable/Attainment.		
Sullivan County		Unclassifiable/Attainment.		

TENNESSEE—1997 24-HOUR $PM_{2.5}$ NAAQS—Continued

[Primary and secondary]

Designated area	Designation [a]		Classification	
	Date [1]	Type	Date	Type
Sumner County		Unclassifiable/Attainment.		
Tipton County		Unclassifiable/Attainment.		
Trousdale County		Unclassifiable/Attainment.		
Unicoi County		Unclassifiable/Attainment.		
Union County		Unclassifiable/Attainment.		
Van Buren County		Unclassifiable/Attainment.		
Warren County		Unclassifiable/Attainment.		
Washington County		Unclassifiable/Attainment.		
Wayne County		Unclassifiable/Attainment.		
Weakley County		Unclassifiable/Attainment.		
White County		Unclassifiable/Attainment.		
Williamson County		Unclassifiable/Attainment.		
Wilson County		Unclassifiable/Attainment.		

[a] Includes Indian Country located in each county or area, except as otherwise specified.
[1] This date is 90 days after January 5, 2005, unless otherwise noted.

TENNESSEE—2006 24-HOUR $PM_{2.5}$ NAAQS

(Primary and secondary)

Designated area	Designation [a]		Classification	
	Date [1]	Type	Date [2]	Type
Knoxville-Sevierville-La Follette, TN:				
Anderson County		Nonattainment		Moderate.
Blount County		Nonattainment		Moderate.
Knox County		Nonattainment		Moderate.
Loudon County		Nonattainment		Moderate.
Roane County (part)		Nonattainment		Moderate.
The area described by U.S. Census 2000 block group identifier 47–145–0307–2.				
Rest of State:				
Bedford County		Unclassifiable/Attainment.		
Benton County		Unclassifiable/Attainment.		
Bledsoe County		Unclassifiable/Attainment.		
Bradley County		Unclassifiable/Attainment.		
Campbell County		Unclassifiable/Attainment.		
Cannon County		Unclassifiable/Attainment.		
Carroll County		Unclassifiable/Attainment.		
Carter County		Unclassifiable/Attainment.		
Cheatham County		Unclassifiable/Attainment.		
Chester County		Unclassifiable/Attainment.		
Claiborne County		Unclassifiable/Attainment.		
Clay County		Unclassifiable/Attainment.		
Cocke County		Unclassifiable/Attainment.		
Coffee County		Unclassifiable/Attainment.		
Crockett County		Unclassifiable/Attainment.		
Cumberland County		Unclassifiable/Attainment.		
Davidson County		Unclassifiable/Attainment.		
Decatur County		Unclassifiable/Attainment.		
DeKalb County		Unclassifiable/Attainment.		
Dickson County		Unclassifiable/Attainment.		
Dyer County		Unclassifiable/Attainment.		
Fayette County		Unclassifiable/Attainment.		
Fentress County		Unclassifiable/Attainment.		
Franklin County		Unclassifiable/Attainment.		
Gibson County		Unclassifiable/Attainment.		
Giles County		Unclassifiable/Attainment.		
Grainger County		Unclassifiable/Attainment.		
Greene County		Unclassifiable/Attainment.		
Grundy County		Unclassifiable/Attainment.		
Hamblen County		Unclassifiable/Attainment.		
Hamilton County		Unclassifiable/Attainment.		
Hancock County		Unclassifiable/Attainment.		
Hardeman County		Unclassifiable/Attainment.		
Hardin County		Unclassifiable/Attainment.		
Hawkins County		Unclassifiable/Attainment.		
Haywood County		Unclassifiable/Attainment.		

TENNESSEE—2006 24-HOUR $PM_{2.5}$ NAAQS—Continued

(Primary and secondary)

Designated area	Designation [a]		Classification	
	Date [1]	Type	Date [2]	Type
Henderson County		Unclassifiable/Attainment.		
Henry County		Unclassifiable/Attainment.		
Hickman County		Unclassifiable/Attainment.		
Houston County		Unclassifiable/Attainment.		
Humphreys County		Unclassifiable/Attainment.		
Jackson County		Unclassifiable/Attainment.		
Jefferson County		Unclassifiable/Attainment.		
Johnson County		Unclassifiable/Attainment.		
Lake County		Unclassifiable/Attainment.		
Lauderdale County		Unclassifiable/Attainment.		
Lawrence County		Unclassifiable/Attainment.		
Lewis County		Unclassifiable/Attainment.		
Lincoln County		Unclassifiable/Attainment.		
McMinn County		Unclassifiable/Attainment.		
McNairy County		Unclassifiable/Attainment.		
Macon County		Unclassifiable/Attainment.		
Madison County		Unclassifiable/Attainment.		
Marion County		Unclassifiable/Attainment.		
Marshall County		Unclassifiable/Attainment.		
Maury County		Unclassifiable/Attainment.		
Meigs County		Unclassifiable/Attainment.		
Monroe County		Unclassifiable/Attainment.		
Montgomery County		Unclassifiable/Attainment.		
Moore County		Unclassifiable/Attainment.		
Morgan County		Unclassifiable/Attainment.		
Obion County		Unclassifiable/Attainment.		
Overton County		Unclassifiable/Attainment.		
Perry County		Unclassifiable/Attainment.		
Pickett County		Unclassifiable/Attainment.		
Polk County		Unclassifiable/Attainment.		
Putnam County		Unclassifiable/Attainment.		
Rhea County		Unclassifiable/Attainment.		
Roane County (remainder)		Unclassifiable/Attainment.		
Robertson County		Unclassifiable/Attainment.		
Rutherford County		Unclassifiable/Attainment.		
Scott County.		Unclassifiable/Attainment.		
Sequatchie County		Unclassifiable/Attainment.		
Sevier County		Unclassifiable/Attainment.		
Shelby County		Unclassifiable/Attainment.		
Smith County		Unclassifiable/Attainment.		
Stewart County		Unclassifiable/Attainment.		
Sullivan County		Unclassifiable/Attainment.		
Sumner County		Unclassifiable/Attainment.		
Tipton County		Unclassifiable/Attainment.		
Trousdale County		Unclassifiable/Attainment.		
Unicoi County		Unclassifiable/Attainment.		
Union County		Unclassifiable/Attainment.		
Van Buren County		Unclassifiable/Attainment.		
Warren County		Unclassifiable/Attainment.		
Washington County		Unclassifiable/Attainment.		
Wayne County		Unclassifiable/Attainment.		
Weakley County		Unclassifiable/Attainment.		
White County		Unclassifiable/Attainment.		
Williamson County		Unclassifiable/Attainment.		
Wilson County		Unclassifiable/Attainment.		

[a] Includes Indian Country located in each county or area, except as otherwise specified.
[1] This date is 30 days after November 13, 2009, unless otherwise noted.
[2] This date is July 2, 2014, unless otherwise noted.

* * * * *

■ 45. Section 81.344 is amended as follows:

■ a. By removing the tables titled ''Texas—$PM_{2.5}$ (Annual NAAQS)'' and ''Texas—$PM_{2.5}$ [24-hour NAAQS]''.

■ b. By adding three tables titled ''Texas—1997 Annual $PM_{2.5}$ NAAQS (Primary and Secondary)'' and ''Texas—1997 24-hour $PM_{2.5}$ NAAQS (Primary and Secondary)'' and ''Texas—2006 24-hour $PM_{2.5}$ NAAQS (Primary and Secondary)'' before the table titled ''Texas—NO_2 (1971 Annual Standard)''.

The additions read as follows:

§ 81.344 Texas.

* * * * *

TEXAS—1997 ANNUAL $PM_{2.5}$ NAAQS

(Primary and secondary)

Designated area	Designation [a]		Classification	
	Date [1]	Type	Date	Type
AQCR 022 Shreveport-Texarkana-Tyler Interstate:				
Anderson County		Unclassifiable/Attainment.		
Bowie County		Unclassifiable/Attainment.		
Camp County		Unclassifiable/Attainment.		
Cass County		Unclassifiable/Attainment.		
Cherokee County		Unclassifiable/Attainment.		
Delta County		Unclassifiable/Attainment.		
Franklin County		Unclassifiable/Attainment.		
Gregg County		Unclassifiable/Attainment.		
Harrison County		Unclassifiable/Attainment.		
Hopkins County		Unclassifiable/Attainment.		
Lamar County		Unclassifiable/Attainment.		
Marion County		Unclassifiable/Attainment.		
Morris County		Unclassifiable/Attainment.		
Panola County		Unclassifiable/Attainment.		
Rains County		Unclassifiable/Attainment.		
Red River County		Unclassifiable/Attainment.		
Rusk County		Unclassifiable/Attainment.		
Smith County		Unclassifiable/Attainment.		
Titus County		Unclassifiable/Attainment.		
Upshur County		Unclassifiable/Attainment.		
Van Zandt County		Unclassifiable/Attainment.		
Wood County		Unclassifiable/Attainment.		
AQCR 106 S Louisiana-SE Texas Interstate (remainder of):				
Angelina County		Unclassifiable/Attainment.		
Houston County		Unclassifiable/Attainment.		
Jasper County		Unclassifiable/Attainment.		
Nacogdoches County		Unclassifiable/Attainment.		
Newton County		Unclassifiable/Attainment.		
Polk County		Unclassifiable/Attainment.		
Sabine County		Unclassifiable/Attainment.		
San Augustine County		Unclassifiable/Attainment.		
San Jacinto County		Unclassifiable/Attainment.		
Shelby County		Unclassifiable/Attainment.		
Trinity County		Unclassifiable/Attainment.		
Tyler County		Unclassifiable/Attainment.		
AQCR 153 El Paso-Las Cruces-Alamogordo Interstate:				
Brewster County		Unclassifiable/Attainment.		
Culberson County		Unclassifiable/Attainment.		
El Paso County		Unclassifiable/Attainment.		
Hudspeth County		Unclassifiable/Attainment.		
Jeff Davis County		Unclassifiable/Attainment.		
Presidio County		Unclassifiable/Attainment.		
AQCR 210 Abilene-Wichita Falls Intrastate:				
Archer County		Unclassifiable/Attainment.		
Baylor County		Unclassifiable/Attainment.		
Brown County		Unclassifiable/Attainment.		
Callahan County		Unclassifiable/Attainment.		
Clay County		Unclassifiable/Attainment.		
Coleman County		Unclassifiable/Attainment.		
Comanche County		Unclassifiable/Attainment.		
Cottle County		Unclassifiable/Attainment.		
Eastland County		Unclassifiable/Attainment.		
Fisher County		Unclassifiable/Attainment.		
Foard County		Unclassifiable/Attainment.		
Hardeman County		Unclassifiable/Attainment.		
Haskell County		Unclassifiable/Attainment.		
Jack County		Unclassifiable/Attainment.		
Jones County		Unclassifiable/Attainment.		
Kent County		Unclassifiable/Attainment.		
Knox County		Unclassifiable/Attainment.		
Mitchell County		Unclassifiable/Attainment.		
Montague County		Unclassifiable/Attainment.		
Nolan County		Unclassifiable/Attainment.		
Runnels County		Unclassifiable/Attainment.		
Scurry County		Unclassifiable/Attainment.		
Shackelford County		Unclassifiable/Attainment.		
Stephens County		Unclassifiable/Attainment.		
Stonewall County		Unclassifiable/Attainment.		

TEXAS—1997 ANNUAL $PM_{2.5}$ NAAQS—Continued

(Primary and secondary)

Designated area	Designation [a]		Classification	
	Date [1]	Type	Date	Type
Taylor County		Unclassifiable/Attainment.		
Throckmorton County		Unclassifiable/Attainment.		
Wichita County		Unclassifiable/Attainment.		
Wilbarger County		Unclassifiable/Attainment.		
Young County		Unclassifiable/Attainment.		
AQCR 211 Amarillo-Lubbock Intrastate:				
Armstrong County		Unclassifiable/Attainment.		
Bailey County		Unclassifiable/Attainment.		
Briscoe County		Unclassifiable/Attainment.		
Carson County		Unclassifiable/Attainment.		
Castro County		Unclassifiable/Attainment.		
Childress County		Unclassifiable/Attainment.		
Cochran County		Unclassifiable/Attainment.		
Collingsworth County		Unclassifiable/Attainment.		
Crosby County		Unclassifiable/Attainment.		
Dallam County		Unclassifiable/Attainment.		
Deaf Smith County		Unclassifiable/Attainment.		
Dickens County		Unclassifiable/Attainment.		
Donley County		Unclassifiable/Attainment.		
Floyd County		Unclassifiable/Attainment.		
Garza County		Unclassifiable/Attainment.		
Gray County		Unclassifiable/Attainment.		
Hale County		Unclassifiable/Attainment.		
Hall County		Unclassifiable/Attainment.		
Hansford County		Unclassifiable/Attainment.		
Hartley County		Unclassifiable/Attainment.		
Hemphill County		Unclassifiable/Attainment.		
Hockley County		Unclassifiable/Attainment.		
Hutchinson County		Unclassifiable/Attainment.		
King County		Unclassifiable/Attainment.		
Lamb County		Unclassifiable/Attainment.		
Lipscomb County		Unclassifiable/Attainment.		
Lubbock County		Unclassifiable/Attainment.		
Lynn County		Unclassifiable/Attainment.		
Moore County		Unclassifiable/Attainment.		
Motley County		Unclassifiable/Attainment.		
Ochiltree County		Unclassifiable/Attainment.		
Oldham County		Unclassifiable/Attainment.		
Parmer County		Unclassifiable/Attainment.		
Potter County		Unclassifiable/Attainment.		
Randall County		Unclassifiable/Attainment.		
Roberts County		Unclassifiable/Attainment.		
Sherman County		Unclassifiable/Attainment.		
Swisher County		Unclassifiable/Attainment.		
Terry County		Unclassifiable/Attainment.		
Wheeler County		Unclassifiable/Attainment.		
Yoakum County		Unclassifiable/Attainment.		
AQCR 212 Austin-Waco Intrastate:				
Bastrop County		Unclassifiable/Attainment.		
Bell County		Unclassifiable/Attainment.		
Blanco County		Unclassifiable/Attainment.		
Bosque County		Unclassifiable/Attainment.		
Brazos County		Unclassifiable/Attainment.		
Burleson County		Unclassifiable/Attainment.		
Burnet County		Unclassifiable/Attainment.		
Caldwell County		Unclassifiable/Attainment.		
Coryell County		Unclassifiable/Attainment.		
Falls County		Unclassifiable/Attainment.		
Fayette County		Unclassifiable/Attainment.		
Freestone County		Unclassifiable/Attainment.		
Grimes County		Unclassifiable/Attainment.		
Hamilton County		Unclassifiable/Attainment.		
Hays County		Unclassifiable/Attainment.		
Hill County		Unclassifiable/Attainment.		
Lampasas County		Unclassifiable/Attainment.		
Lee County		Unclassifiable/Attainment.		
Leon County		Unclassifiable/Attainment.		
Limestone County		Unclassifiable/Attainment.		
Llano County		Unclassifiable/Attainment.		

TEXAS—1997 ANNUAL $PM_{2.5}$ NAAQS—Continued

(Primary and secondary)

Designated area	Designation [a]		Classification	
	Date [1]	Type	Date	Type
McLennan County		Unclassifiable/Attainment.		
Madison County		Unclassifiable/Attainment.		
Milam County		Unclassifiable/Attainment.		
Mills County		Unclassifiable/Attainment.		
Robertson County		Unclassifiable/Attainment.		
San Saba County		Unclassifiable/Attainment.		
Travis County		Unclassifiable/Attainment.		
Washington County		Unclassifiable/Attainment.		
Williamson County		Unclassifiable/Attainment.		
AQCR 213 Brownsville-Laredo Intrastate:				
Cameron County		Unclassifiable/Attainment.		
Hidalgo County		Unclassifiable/Attainment.		
Jim Hogg County		Unclassifiable/Attainment.		
Starr County		Unclassifiable/Attainment.		
Webb County		Unclassifiable/Attainment.		
Willacy County		Unclassifiable/Attainment.		
Zapata County		Unclassifiable/Attainment.		
AQCR 214 Corpus Christi-Victoria Intrastate (part):				
Nueces County		Unclassifiable/Attainment.		
AQCR 214 Corpus Christi-Victoria Intrastate (remainder of):				
Aransas County		Unclassifiable/Attainment.		
Bee County		Unclassifiable/Attainment.		
Brooks County		Unclassifiable/Attainment.		
Calhoun County		Unclassifiable/Attainment.		
DeWitt County		Unclassifiable/Attainment.		
Duval County		Unclassifiable/Attainment.		
Goliad County		Unclassifiable/Attainment.		
Gonzales County		Unclassifiable/Attainment.		
Jackson County		Unclassifiable/Attainment.		
Jim Wells County		Unclassifiable/Attainment.		
Kenedy County		Unclassifiable/Attainment.		
Kleberg County		Unclassifiable/Attainment.		
Lavaca County		Unclassifiable/Attainment.		
Live Oak County		Unclassifiable/Attainment.		
McMullen County		Unclassifiable/Attainment.		
Refugio County		Unclassifiable/Attainment.		
San Patricio County		Unclassifiable/Attainment.		
AQCR 215 Metro Dallas-Fort Worth Intrastate (remainder of):				
Cooke County		Unclassifiable/Attainment.		
Erath County		Unclassifiable/Attainment.		
Fannin County		Unclassifiable/Attainment.		
Grayson County		Unclassifiable/Attainment.		
Henderson County		Unclassifiable/Attainment.		
Hood County		Unclassifiable/Attainment.		
Hunt County		Unclassifiable/Attainment.		
Navarro County		Unclassifiable/Attainment.		
Palo Pinto County		Unclassifiable/Attainment.		
Somervell County		Unclassifiable/Attainment.		
Wise County		Unclassifiable/Attainment.		
AQCR 216 Metro Houston-Galveston Intrastate (remainder of):				
Austin County		Unclassifiable/Attainment.		
Colorado County		Unclassifiable/Attainment.		
Matagorda County		Unclassifiable/Attainment.		
Walker County		Unclassifiable/Attainment.		
Wharton County		Unclassifiable/Attainment.		
AQCR 217 Metro San Antonio Intrastate (remainder of):				
Atascosa County		Unclassifiable/Attainment.		
Bandera County		Unclassifiable/Attainment.		
Dimmit County		Unclassifiable/Attainment.		
Edwards County		Unclassifiable/Attainment.		
Frio County		Unclassifiable/Attainment.		
Gillespie County		Unclassifiable/Attainment.		
Karnes County		Unclassifiable/Attainment.		
Kendall County		Unclassifiable/Attainment.		
Kerr County		Unclassifiable/Attainment.		
Kinney County		Unclassifiable/Attainment.		
La Salle County		Unclassifiable/Attainment.		
Maverick County		Unclassifiable/Attainment.		

TEXAS—1997 ANNUAL $PM_{2.5}$ NAAQS—Continued

(Primary and secondary)

Designated area	Designation [a]		Classification	
	Date [1]	Type	Date	Type
Medina County		Unclassifiable/Attainment.		
Real County		Unclassifiable/Attainment.		
Uvalde County		Unclassifiable/Attainment.		
Val Verde County		Unclassifiable/Attainment.		
Wilson County		Unclassifiable/Attainment.		
Zavala County		Unclassifiable/Attainment.		
AQCR 218 Midland-Odessa-San Angelo Intrastate (part):				
Ector County		Unclassifiable/Attainment.		
AQCR 218 Midland-Odessa-San Angelo Intrastate (remainder of):				
Andrews County		Unclassifiable/Attainment.		
Borden County		Unclassifiable/Attainment.		
Coke County		Unclassifiable/Attainment.		
Concho County		Unclassifiable/Attainment.		
Crane County		Unclassifiable/Attainment.		
Crockett County		Unclassifiable/Attainment.		
Dawson County		Unclassifiable/Attainment.		
Gaines County		Unclassifiable/Attainment.		
Glasscock County		Unclassifiable/Attainment.		
Howard County		Unclassifiable/Attainment.		
Irion County		Unclassifiable/Attainment.		
Kimble County		Unclassifiable/Attainment.		
Loving County		Unclassifiable/Attainment.		
McCulloch County		Unclassifiable/Attainment.		
Martin County		Unclassifiable/Attainment.		
Mason County		Unclassifiable/Attainment.		
Menard County		Unclassifiable/Attainment.		
Midland County		Unclassifiable/Attainment.		
Pecos County		Unclassifiable/Attainment.		
Reagan County		Unclassifiable/Attainment.		
Reeves County		Unclassifiable/Attainment.		
Schleicher County		Unclassifiable/Attainment.		
Sterling County		Unclassifiable/Attainment.		
Sutton County		Unclassifiable/Attainment.		
Terrell County		Unclassifiable/Attainment.		
Tom Green County		Unclassifiable/Attainment.		
Upton County		Unclassifiable/Attainment.		
Ward County		Unclassifiable/Attainment.		
Winkler County		Unclassifiable/Attainment.		
Beaumont/Port Arthur, TX:				
Hardin County		Unclassifiable/Attainment.		
Jefferson County		Unclassifiable/Attainment.		
Orange County		Unclassifiable/Attainment.		
Dallas-Fort Worth, TX:				
Collin County		Unclassifiable/Attainment.		
Dallas County		Unclassifiable/Attainment.		
Denton County		Unclassifiable/Attainment.		
Ellis County		Unclassifiable/Attainment.		
Johnson County		Unclassifiable/Attainment.		
Kaufman County		Unclassifiable/Attainment.		
Parker County		Unclassifiable/Attainment.		
Rockwall County		Unclassifiable/Attainment.		
Tarrant County		Unclassifiable/Attainment.		
Houston-Galveston-Brazoria, TX:				
Brazoria County		Unclassifiable/Attainment.		
Chambers County		Unclassifiable/Attainment.		
Fort Bend County		Unclassifiable/Attainment.		
Galveston County		Unclassifiable/Attainment.		
Harris County		Unclassifiable/Attainment.		
Liberty County		Unclassifiable/Attainment.		
Montgomery County		Unclassifiable/Attainment.		
Waller County		Unclassifiable/Attainment.		
San Antonio, TX:				
Bexar County		Unclassifiable/Attainment.		
Comal County		Unclassifiable/Attainment.		
Guadalupe County		Unclassifiable/Attainment.		
Victoria Area:				
Victoria County		Unclassifiable/Attainment.		

[a] Includes Indian Country located in each county or area, except as otherwise specified.

[1] This date is 90 days after January 5, 2005, unless otherwise noted.

TEXAS—1997 ANNUAL 24-HOUR $PM_{2.5}$ NAAQS

[Primary and secondary]

Designated area	Designation [a]		Classification	
	Date [1]	Type	Date	Type
AQCR 022 Shreveport-Texarkana-Tyler Interstate:				
Anderson County		Unclassifiable/Attainment.		
Bowie County		Unclassifiable/Attainment.		
Camp County		Unclassifiable/Attainment.		
Cass County		Unclassifiable/Attainment.		
Cherokee County		Unclassifiable/Attainment.		
Delta County		Unclassifiable/Attainment.		
Franklin County		Unclassifiable/Attainment.		
Gregg County		Unclassifiable/Attainment.		
Harrison County		Unclassifiable/Attainment.		
Hopkins County		Unclassifiable/Attainment.		
Lamar County		Unclassifiable/Attainment.		
Marion County		Unclassifiable/Attainment.		
Morris County		Unclassifiable/Attainment.		
Panola County		Unclassifiable/Attainment.		
Rains County		Unclassifiable/Attainment.		
Red River County		Unclassifiable/Attainment.		
Rusk County		Unclassifiable/Attainment.		
Smith County		Unclassifiable/Attainment.		
Titus County		Unclassifiable/Attainment.		
Upshur County		Unclassifiable/Attainment.		
Van Zandt County		Unclassifiable/Attainment.		
Wood County		Unclassifiable/Attainment.		
AQCR 106 S Louisiana-SE Texas Interstate (remainder of):				
Angelina County		Unclassifiable/Attainment.		
Houston County		Unclassifiable/Attainment.		
Jasper County		Unclassifiable/Attainment.		
Nacogdoches County		Unclassifiable/Attainment.		
Newton County		Unclassifiable/Attainment.		
Polk County		Unclassifiable/Attainment.		
Sabine County		Unclassifiable/Attainment.		
San Augustine County		Unclassifiable/Attainment.		
San Jacinto County		Unclassifiable/Attainment.		
Shelby County		Unclassifiable/Attainment.		
Trinity County		Unclassifiable/Attainment.		
Tyler County		Unclassifiable/Attainment.		
AQCR 153 El Paso-Las Cruces-Alamogordo Interstate:				
Brewster County		Unclassifiable/Attainment.		
Culberson County		Unclassifiable/Attainment.		
El Paso County		Unclassifiable/Attainment.		
Hudspeth County		Unclassifiable/Attainment.		
Jeff Davis County		Unclassifiable/Attainment.		
Presidio County		Unclassifiable/Attainment.		
AQCR 210 Abilene-Wichita Falls Intrastate:				
Archer County		Unclassifiable/Attainment.		
Baylor County		Unclassifiable/Attainment.		
Brown County		Unclassifiable/Attainment.		
Callahan County		Unclassifiable/Attainment.		
Clay County		Unclassifiable/Attainment.		
Coleman County		Unclassifiable/Attainment.		
Comanche County		Unclassifiable/Attainment.		
Cottle County		Unclassifiable/Attainment.		
Eastland County		Unclassifiable/Attainment.		
Fisher County		Unclassifiable/Attainment.		
Foard County		Unclassifiable/Attainment.		
Hardeman County		Unclassifiable/Attainment.		
Haskell County		Unclassifiable/Attainment.		
Jack County		Unclassifiable/Attainment.		
Jones County		Unclassifiable/Attainment.		
Kent County		Unclassifiable/Attainment.		
Knox County		Unclassifiable/Attainment.		
Mitchell County		Unclassifiable/Attainment.		
Montague County		Unclassifiable/Attainment.		
Nolan County		Unclassifiable/Attainment.		
Runnels County		Unclassifiable/Attainment.		
Scurry County		Unclassifiable/Attainment.		
Shackelford County		Unclassifiable/Attainment.		

TEXAS—1997 ANNUAL 24-HOUR $PM_{2.5}$ NAAQS—Continued

[Primary and secondary]

Designated area	Designation [a]		Classification	
	Date [1]	Type	Date	Type
Stephens County		Unclassifiable/Attainment.		
Stonewall County		Unclassifiable/Attainment.		
Taylor County		Unclassifiable/Attainment.		
Throckmorton County		Unclassifiable/Attainment.		
Wichita County		Unclassifiable/Attainment.		
Wilbarger County		Unclassifiable/Attainment.		
Young County		Unclassifiable/Attainment.		
AQCR 211 Amarillo-Lubbock Intrastate:				
Armstrong County		Unclassifiable/Attainment.		
Bailey County		Unclassifiable/Attainment.		
Briscoe County		Unclassifiable/Attainment.		
Carson County		Unclassifiable/Attainment.		
Castro County		Unclassifiable/Attainment.		
Childress County		Unclassifiable/Attainment.		
Cochran County		Unclassifiable/Attainment.		
Collingsworth County		Unclassifiable/Attainment.		
Crosby County		Unclassifiable/Attainment.		
Dallam County		Unclassifiable/Attainment.		
Deaf Smith County		Unclassifiable/Attainment.		
Dickens County		Unclassifiable/Attainment.		
Donley County		Unclassifiable/Attainment.		
Floyd County		Unclassifiable/Attainment.		
Garza County		Unclassifiable/Attainment.		
Gray County		Unclassifiable/Attainment.		
Hale County		Unclassifiable/Attainment.		
Hall County		Unclassifiable/Attainment.		
Hansford County		Unclassifiable/Attainment.		
Hartley County		Unclassifiable/Attainment.		
Hemphill County		Unclassifiable/Attainment.		
Hockley County		Unclassifiable/Attainment.		
Hutchinson County		Unclassifiable/Attainment.		
King County		Unclassifiable/Attainment.		
Lamb County		Unclassifiable/Attainment.		
Lipscomb County		Unclassifiable/Attainment.		
Lubbock County		Unclassifiable/Attainment.		
Lynn County		Unclassifiable/Attainment.		
Moore County		Unclassifiable/Attainment.		
Motley County		Unclassifiable/Attainment.		
Ochiltree County		Unclassifiable/Attainment.		
Oldham County		Unclassifiable/Attainment.		
Parmer County		Unclassifiable/Attainment.		
Potter County		Unclassifiable/Attainment.		
Randall County		Unclassifiable/Attainment.		
Roberts County		Unclassifiable/Attainment.		
Sherman County		Unclassifiable/Attainment.		
Swisher County		Unclassifiable/Attainment.		
Terry County		Unclassifiable/Attainment.		
Wheeler County		Unclassifiable/Attainment.		
Yoakum County		Unclassifiable/Attainment.		
AQCR 212 Austin-Waco Intrastate:				
Bastrop County		Unclassifiable/Attainment.		
Bell County		Unclassifiable/Attainment.		
Blanco County		Unclassifiable/Attainment.		
Bosque County		Unclassifiable/Attainment.		
Brazoe County		Unclassifiable/Attainment.		
Burleson County		Unclassifiable/Attainment.		
Burnet County		Unclassifiable/Attainment.		
Caldwell County		Unclassifiable/Attainment.		
Coryell County		Unclassifiable/Attainment.		
Falls County		Unclassifiable/Attainment.		
Fayette County		Unclassifiable/Attainment.		
Freestone County		Unclassifiable/Attainment.		
Grimes County		Unclassifiable/Attainment.		
Hamilton County		Unclassifiable/Attainment.		
Hays County		Unclassifiable/Attainment.		
Hill County		Unclassifiable/Attainment.		
Lampasas County		Unclassifiable/Attainment.		
Lee County		Unclassifiable/Attainment.		
Leon County		Unclassifiable/Attainment.		

TEXAS—1997 ANNUAL 24-HOUR $PM_{2.5}$ NAAQS—Continued

[Primary and secondary]

Designated area	Designation [a]		Classification	
	Date [1]	Type	Date	Type
Limestone County		Unclassifiable/Attainment.		
Llano County		Unclassifiable/Attainment.		
McLennan County		Unclassifiable/Attainment.		
Madison County		Unclassifiable/Attainment.		
Milam County		Unclassifiable/Attainment.		
Mills County		Unclassifiable/Attainment.		
Robertson County		Unclassifiable/Attainment.		
San Saba County		Unclassifiable/Attainment.		
Travis County		Unclassifiable/Attainment.		
Washington County		Unclassifiable/Attainment.		
Williamson County		Unclassifiable/Attainment.		
AQCR 213 Brownsville-Laredo Intrastate:				
Cameron County		Unclassifiable/Attainment.		
Hidalgo County		Unclassifiable/Attainment.		
Jim Hogg County		Unclassifiable/Attainment.		
Starr County		Unclassifiable/Attainment.		
Webb County		Unclassifiable/Attainment.		
Willacy County		Unclassifiable/Attainment.		
Zapata County		Unclassifiable/Attainment.		
AQCR 214 Corpus Christi-Victoria Intrastate (part):				
Nueces County		Unclassifiable/Attainment.		
AQCR 214 Corpus Christi-Victoria Intrastate (remainder of):				
Aransas County		Unclassifiable/Attainment.		
Bee County		Unclassifiable/Attainment.		
Brooks County		Unclassifiable/Attainment.		
Calhoun County		Unclassifiable/Attainment.		
DeWitt County		Unclassifiable/Attainment.		
Duval County		Unclassifiable/Attainment.		
Goliad County		Unclassifiable/Attainment.		
Gonzales County		Unclassifiable/Attainment.		
Jackson County		Unclassifiable/Attainment.		
Jim Wells County		Unclassifiable/Attainment.		
Kenedy County		Unclassifiable/Attainment.		
Kleberg County		Unclassifiable/Attainment.		
Lavaca County		Unclassifiable/Attainment.		
Live Oak County		Unclassifiable/Attainment.		
McMullen County		Unclassifiable/Attainment.		
Refugio County		Unclassifiable/Attainment.		
San Patricio County		Unclassifiable/Attainment.		
AQCR 215 Metro Dallas-Fort Worth Intrastate (remainder of):				
Cooke County		Unclassifiable/Attainment.		
Erath County		Unclassifiable/Attainment.		
Fannin County		Unclassifiable/Attainment.		
Grayson County		Unclassifiable/Attainment.		
Henderson County		Unclassifiable/Attainment.		
Hood County		Unclassifiable/Attainment.		
Hunt County		Unclassifiable/Attainment.		
Navarro County		Unclassifiable/Attainment.		
Palo Pinto County		Unclassifiable/Attainment.		
Somervell County		Unclassifiable/Attainment.		
Wise County		Unclassifiable/Attainment.		
AQCR 216 Metro Houston-Galveston Intrastate (remainder of):				
Austin County		Unclassifiable/Attainment.		
Colorado County		Unclassifiable/Attainment.		
Matagorda County		Unclassifiable/Attainment.		
Walker County		Unclassifiable/Attainment.		
Wharton County		Unclassifiable/Attainment.		
AQCR 217 Metro San Antonio Intrastate (remainder of):				
Atascosa County		Unclassifiable/Attainment.		
Bandera County		Unclassifiable/Attainment.		
Dimmit County		Unclassifiable/Attainment.		
Edwards County		Unclassifiable/Attainment.		
Frio County		Unclassifiable/Attainment.		
Gillespie County		Unclassifiable/Attainment.		
Karnes County		Unclassifiable/Attainment.		
Kendall County		Unclassifiable/Attainment.		
Kerr County		Unclassifiable/Attainment.		
Kinney County		Unclassifiable/Attainment.		

TEXAS—1997 ANNUAL 24-HOUR $PM_{2.5}$ NAAQS—Continued

[Primary and secondary]

Designated area	Designation [a]		Classification	
	Date [1]	Type	Date	Type
La Salle County		Unclassifiable/Attainment.		
Maverick County		Unclassifiable/Attainment.		
Medina County		Unclassifiable/Attainment.		
Real County		Unclassifiable/Attainment.		
Uvalde County		Unclassifiable/Attainment.		
Val Verde County		Unclassifiable/Attainment.		
Wilson County		Unclassifiable/Attainment.		
Zavala County		Unclassifiable/Attainment.		
AQCR 218 Midland-Odessa-San Angelo Intrastate (part):				
Ector County		Unclassifiable/Attainment.		
AQCR 218 Midland-Odessa-San Angelo Intrastate (remainder of):				
Andrews County		Unclassifiable/Attainment.		
Borden County		Unclassifiable/Attainment.		
Coke County		Unclassifiable/Attainment.		
Concho County		Unclassifiable/Attainment.		
Crane County		Unclassifiable/Attainment.		
Crockett County		Unclassifiable/Attainment.		
Dawson County		Unclassifiable/Attainment.		
Gaines County		Unclassifiable/Attainment.		
Glasscock County		Unclassifiable/Attainment.		
Howard County		Unclassifiable/Attainment.		
Irion County		Unclassifiable/Attainment.		
Kimble County		Unclassifiable/Attainment.		
Loving County		Unclassifiable/Attainment.		
McCulloch County		Unclassifiable/Attainment.		
Martin County		Unclassifiable/Attainment.		
Mason County		Unclassifiable/Attainment.		
Menard County		Unclassifiable/Attainment.		
Midland County		Unclassifiable/Attainment.		
Pecos County		Unclassifiable/Attainment.		
Reagan County		Unclassifiable/Attainment.		
Reeves County		Unclassifiable/Attainment.		
Schleicher County		Unclassifiable/Attainment.		
Sterling County		Unclassifiable/Attainment.		
Sutton County		Unclassifiable/Attainment.		
Terrell County		Unclassifiable/Attainment.		
Tom Green County		Unclassifiable/Attainment.		
Upton County		Unclassifiable/Attainment.		
Ward County		Unclassifiable/Attainment.		
Winkler County		Unclassifiable/Attainment.		
Beaumont/Port Arthur, TX:.				
Hardin County		Unclassifiable/Attainment.		
Jefferson County		Unclassifiable/Attainment.		
Orange County		Unclassifiable/Attainment.		
Dallas-Fort Worth, TX:.				
Collin County		Unclassifiable/Attainment.		
Dallas County		Unclassifiable/Attainment.		
Denton County		Unclassifiable/Attainment.		
Ellis County		Unclassifiable/Attainment.		
Johnson County		Unclassifiable/Attainment.		
Kaufman County		Unclassifiable/Attainment.		
Parker County		Unclassifiable/Attainment.		
Rockwell County		Unclassifiable/Attainment.		
Tarrant County		Unclassifiable/Attainment.		
Houston-Galveston-Brazoria, TX:.				
Brazoria County		Unclassifiable/Attainment.		
Chambers County		Unclassifiable/Attainment.		
Fort Bend County		Unclassifiable/Attainment.		
Galveston County		Unclassifiable/Attainment.		
Harris County		Unclassifiable/Attainment.		
Liberty County		Unclassifiable/Attainment.		
Montgomery County		Unclassifiable/Attainment.		
Waller County		Unclassifiable/Attainment.		
San Antonio, TX:.				
Bexar County		Unclassifiable/Attainment.		
Comal County		Unclassifiable/Attainment.		
Guadalupe County		Unclassifiable/Attainment.		
Victoria Area:.				

TEXAS—1997 ANNUAL 24-HOUR $PM_{2.5}$ NAAQS—Continued

[Primary and secondary]

Designated area	Designation [a]		Classification	
	Date [1]	Type	Date	Type
Victoria County		Unclassifiable/Attainment.		

[a] Includes Indian Country located in each county or area, except as otherwise specified.
[1] This date is 90 days after January 5, 2005, unless otherwise noted.

TEXAS—2006 24-HOUR $PM_{2.5}$ NAAQS

[Primary and secondary]

Designated area	Designation [a]		Classification	
	Date [1]	Type	Date	Type
AQCR 022 Shreveport-Texarkana-Tyler Interstate:				
Anderson County		Unclassifiable/Attainment.		
Bowie County		Unclassifiable/Attainment.		
Camp County		Unclassifiable/Attainment.		
Cass County		Unclassifiable/Attainment.		
Cherokee County		Unclassifiable/Attainment.		
Delta County		Unclassifiable/Attainment.		
Franklin County		Unclassifiable/Attainment.		
Gregg County		Unclassifiable/Attainment.		
Harrison County		Unclassifiable/Attainment.		
Hopkins County		Unclassifiable/Attainment.		
Lamar County		Unclassifiable/Attainment.		
Marion County		Unclassifiable/Attainment.		
Morris County		Unclassifiable/Attainment.		
Panola County		Unclassifiable/Attainment.		
Rains County		Unclassifiable/Attainment.		
Red River County		Unclassifiable/Attainment.		
Rusk County		Unclassifiable/Attainment.		
Smith County		Unclassifiable/Attainment.		
Titus County		Unclassifiable/Attainment.		
Upshur County		Unclassifiable/Attainment.		
Van Zandt County		Unclassifiable/Attainment.		
Wood County		Unclassifiable/Attainment.		
AQCR 106 S Louisiana-SE Texas Interstate (remainder of):				
Angelina County		Unclassifiable/Attainment.		
Houston County		Unclassifiable/Attainment.		
Jasper County		Unclassifiable/Attainment.		
Nacogdoches County		Unclassifiable/Attainment.		
Newton County		Unclassifiable/Attainment.		
Polk County		Unclassifiable/Attainment.		
Sabine County		Unclassifiable/Attainment.		
San Augustine County		Unclassifiable/Attainment.		
San Jacinto County		Unclassifiable/Attainment.		
Shelby County		Unclassifiable/Attainment.		
Trinity County		Unclassifiable/Attainment.		
Tyler County		Unclassifiable/Attainment.		
AQCR 153 El Paso-Las Cruces-Alamogordo Interstate:				
Brewster County		Unclassifiable/Attainment.		
Culberson County		Unclassifiable/Attainment.		
El Paso County		Unclassifiable/Attainment.		
Hudspeth County		Unclassifiable/Attainment.		
Jeff Davis County		Unclassifiable/Attainment.		
Presidio County		Unclassifiable/Attainment.		
AQCR 210 Abilene-Wichita Falls Intrastate:				
Archer County		Unclassifiable/Attainment.		
Baylor County		Unclassifiable/Attainment.		
Brown County		Unclassifiable/Attainment.		
Callahan County		Unclassifiable/Attainment.		
Clay County		Unclassifiable/Attainment.		
Coleman County		Unclassifiable/Attainment.		
Comanche County		Unclassifiable/Attainment.		
Cottle County		Unclassifiable/Attainment.		
Eastland County		Unclassifiable/Attainment.		
Fisher County		Unclassifiable/Attainment.		
Foard County		Unclassifiable/Attainment.		
Hardeman County		Unclassifiable/Attainment.		
Haskell County		Unclassifiable/Attainment.		

TEXAS—2006 24-HOUR $PM_{2.5}$ NAAQS—Continued

[Primary and secondary]

Designated area	Designation [a]		Classification	
	Date [1]	Type	Date	Type
Jack County		Unclassifiable/Attainment.		
Jones County		Unclassifiable/Attainment.		
Kent County		Unclassifiable/Attainment.		
Knox County		Unclassifiable/Attainment.		
Mitchell County		Unclassifiable/Attainment.		
Montague County		Unclassifiable/Attainment.		
Nolan County		Unclassifiable/Attainment.		
Runnels County		Unclassifiable/Attainment.		
Scurry County		Unclassifiable/Attainment.		
Shackelford County		Unclassifiable/Attainment.		
Stephens County		Unclassifiable/Attainment.		
Stonewall County		Unclassifiable/Attainment.		
Taylor County		Unclassifiable/Attainment.		
Throckmorton County		Unclassifiable/Attainment.		
Wichita County		Unclassifiable/Attainment.		
Wilbarger County		Unclassifiable/Attainment.		
Young County		Unclassifiable/Attainment.		
AQCR 211 Amarillo-Lubbock Intrastate:				
Armstrong County		Unclassifiable/Attainment.		
Bailey County		Unclassifiable/Attainment.		
Briscoe County		Unclassifiable/Attainment.		
Carson County		Unclassifiable/Attainment.		
Castro County		Unclassifiable/Attainment.		
Childress County		Unclassifiable/Attainment.		
Cochran County		Unclassifiable/Attainment.		
Collingsworth County		Unclassifiable/Attainment.		
Crosby County		Unclassifiable/Attainment.		
Dallam County		Unclassifiable/Attainment.		
Deaf Smith County		Unclassifiable/Attainment.		
Dickens County		Unclassifiable/Attainment.		
Donley County		Unclassifiable/Attainment.		
Floyd County		Unclassifiable/Attainment.		
Garza County		Unclassifiable/Attainment.		
Gray County		Unclassifiable/Attainment.		
Hale County		Unclassifiable/Attainment.		
Hall County		Unclassifiable/Attainment.		
Hansford County		Unclassifiable/Attainment.		
Hartley County		Unclassifiable/Attainment.		
Hemphill County		Unclassifiable/Attainment.		
Hockley County		Unclassifiable/Attainment.		
Hutchinson County		Unclassifiable/Attainment.		
King County		Unclassifiable/Attainment.		
Lamb County		Unclassifiable/Attainment.		
Lipscomb County		Unclassifiable/Attainment.		
Lubbock County		Unclassifiable/Attainment.		
Lynn County		Unclassifiable/Attainment.		
Moore County		Unclassifiable/Attainment.		
Motley County		Unclassifiable/Attainment.		
Ochiltree County		Unclassifiable/Attainment.		
Oldham County		Unclassifiable/Attainment.		
Parmer County		Unclassifiable/Attainment.		
Potter County		Unclassifiable/Attainment.		
Randall County		Unclassifiable/Attainment.		
Roberts County		Unclassifiable/Attainment.		
Sherman County		Unclassifiable/Attainment.		
Swisher County		Unclassifiable/Attainment.		
Terry County		Unclassifiable/Attainment.		
Wheeler County		Unclassifiable/Attainment.		
Yoakum County		Unclassifiable/Attainment.		
AQCR 212 Austin-Waco Intrastate:				
Bastrop County		Unclassifiable/Attainment.		
Bell County		Unclassifiable/Attainment.		
Blanco County		Unclassifiable/Attainment.		
Bosque County		Unclassifiable/Attainment.		
Brazoe County		Unclassifiable/Attainment.		
Burleson County		Unclassifiable/Attainment.		
Burnet County		Unclassifiable/Attainment.		
Caldwell County		Unclassifiable/Attainment.		
Coryell County		Unclassifiable/Attainment.		

TEXAS—2006 24-HOUR $PM_{2.5}$ NAAQS—Continued

[Primary and secondary]

Designated area	Designation [a]		Classification	
	Date [1]	Type	Date	Type
Falls County		Unclassifiable/Attainment.		
Fayette County		Unclassifiable/Attainment.		
Freestone County		Unclassifiable/Attainment.		
Grimes County		Unclassifiable/Attainment.		
Hamilton County		Unclassifiable/Attainment.		
Hays County		Unclassifiable/Attainment.		
Hill County		Unclassifiable/Attainment.		
Lampasas County		Unclassifiable/Attainment.		
Lee County		Unclassifiable/Attainment.		
Leon County		Unclassifiable/Attainment.		
Limestone County		Unclassifiable/Attainment.		
Llano County		Unclassifiable/Attainment.		
McLennan County		Unclassifiable/Attainment.		
Madison County		Unclassifiable/Attainment.		
Milam County		Unclassifiable/Attainment.		
Mills County		Unclassifiable/Attainment.		
Robertson County		Unclassifiable/Attainment.		
San Saba County		Unclassifiable/Attainment.		
Travis County		Unclassifiable/Attainment.		
Washington County		Unclassifiable/Attainment.		
Williamson County		Unclassifiable/Attainment.		
AQCR 213 Brownsville-Laredo Intrastate:				
Cameron County		Unclassifiable/Attainment.		
Hidalgo County		Unclassifiable/Attainment.		
Jim Hogg County		Unclassifiable/Attainment.		
Starr County		Unclassifiable/Attainment.		
Webb County		Unclassifiable/Attainment.		
Willacy County		Unclassifiable/Attainment.		
Zapata County		Unclassifiable/Attainment.		
AQCR 214 Corpus Christi-Victoria Intrastate (part):				
Nueces County		Unclassifiable/Attainment.		
AQCR 214 Corpus Christi-Victoria Intrastate (remainder of):				
Aransas County		Unclassifiable/Attainment.		
Bee County		Unclassifiable/Attainment.		
Brooks County		Unclassifiable/Attainment.		
Calhoun County		Unclassifiable/Attainment.		
DeWitt County		Unclassifiable/Attainment.		
Duval County		Unclassifiable/Attainment.		
Goliad County		Unclassifiable/Attainment.		
Gonzales County		Unclassifiable/Attainment.		
Jackson County		Unclassifiable/Attainment.		
Jim Wells County		Unclassifiable/Attainment.		
Kenedy County		Unclassifiable/Attainment.		
Kleberg County		Unclassifiable/Attainment.		
Lavaca County		Unclassifiable/Attainment.		
Live Oak County		Unclassifiable/Attainment.		
McMullen County		Unclassifiable/Attainment.		
Refugio County		Unclassifiable/Attainment.		
San Patricio County		Unclassifiable/Attainment.		
AQCR 215 Metro Dallas-Fort Worth Intrastate (remainder of):				
Cooke County		Unclassifiable/Attainment.		
Erath County		Unclassifiable/Attainment.		
Fannin County		Unclassifiable/Attainment.		
Grayson County		Unclassifiable/Attainment.		
Henderson County		Unclassifiable/Attainment.		
Hood County		Unclassifiable/Attainment.		
Hunt County		Unclassifiable/Attainment.		
Navarro County		Unclassifiable/Attainment.		
Palo Pinto County		Unclassifiable/Attainment.		
Somervell County		Unclassifiable/Attainment.		
Wise County		Unclassifiable/Attainment.		
AQCR 216 Metro Houston-Galveston Intrastate (remainder of):				
Austin County		Unclassifiable/Attainment.		
Colorado County		Unclassifiable/Attainment.		
Matagorda County		Unclassifiable/Attainment.		
Walker County		Unclassifiable/Attainment.		
Wharton County		Unclassifiable/Attainment.		
AQCR 217 Metro San Antonio Intrastate (remainder of):				

TEXAS—2006 24-HOUR $PM_{2.5}$ NAAQS—Continued

[Primary and secondary]

Designated area	Designation [a]		Classification	
	Date [1]	Type	Date	Type
Atascosa County		Unclassifiable/Attainment.		
Bandera County		Unclassifiable/Attainment.		
Dimmit County		Unclassifiable/Attainment.		
Edwards County		Unclassifiable/Attainment.		
Frio County		Unclassifiable/Attainment.		
Gillespie County		Unclassifiable/Attainment.		
Karnes County		Unclassifiable/Attainment.		
Kendall County		Unclassifiable/Attainment.		
Kerr County		Unclassifiable/Attainment.		
Kinney County		Unclassifiable/Attainment.		
La Salle County		Unclassifiable/Attainment.		
Maverick County		Unclassifiable/Attainment.		
Medina County		Unclassifiable/Attainment.		
Real County		Unclassifiable/Attainment.		
Uvalde County		Unclassifiable/Attainment.		
Val Verde County		Unclassifiable/Attainment.		
Wilson County		Unclassifiable/Attainment.		
Zavala County		Unclassifiable/Attainment.		
AQCR 218 Midland-Odessa-San Angelo Intrastate (part):				
Ector County		Unclassifiable/Attainment.		
AQCR 218 Midland-Odessa-San Angelo Intrastate (remainder of):				
Andrews County		Unclassifiable/Attainment.		
Borden County		Unclassifiable/Attainment.		
Coke County		Unclassifiable/Attainment.		
Concho County		Unclassifiable/Attainment.		
Crane County		Unclassifiable/Attainment.		
Crockett County		Unclassifiable/Attainment.		
Dawson County		Unclassifiable/Attainment.		
Gaines County		Unclassifiable/Attainment.		
Glasscock County		Unclassifiable/Attainment.		
Howard County		Unclassifiable/Attainment.		
Irion County		Unclassifiable/Attainment.		
Kimble County		Unclassifiable/Attainment.		
Loving County		Unclassifiable/Attainment.		
McCulloch County		Unclassifiable/Attainment.		
Martin County		Unclassifiable/Attainment.		
Mason County		Unclassifiable/Attainment.		
Menard County		Unclassifiable/Attainment.		
Midland County		Unclassifiable/Attainment.		
Pecos County		Unclassifiable/Attainment.		
Reagan County		Unclassifiable/Attainment.		
Reeves County		Unclassifiable/Attainment.		
Schleicher County		Unclassifiable/Attainment.		
Sterling County		Unclassifiable/Attainment.		
Sutton County		Unclassifiable/Attainment.		
Terrell County		Unclassifiable/Attainment.		
Tom Green County		Unclassifiable/Attainment.		
Upton County		Unclassifiable/Attainment.		
Ward County		Unclassifiable/Attainment.		
Winkler County		Unclassifiable/Attainment.		
Beaumont/Port Arthur, TX:				
Hardin County		Unclassifiable/Attainment.		
Jefferson County		Unclassifiable/Attainment.		
Orange County		Unclassifiable/Attainment.		
Dallas-Fort Worth, TX:				
Collin County		Unclassifiable/Attainment.		
Dallas County		Unclassifiable/Attainment.		
Denton County		Unclassifiable/Attainment.		
Ellis County		Unclassifiable/Attainment.		
Johnson County		Unclassifiable/Attainment.		
Kaufman County		Unclassifiable/Attainment.		
Parker County		Unclassifiable/Attainment.		
Rockwell County		Unclassifiable/Attainment.		
Tarrant County		Unclassifiable/Attainment.		
Houston-Galveston-Brazoria, TX:				
Brazoria County		Unclassifiable/Attainment.		
Chambers County		Unclassifiable/Attainment.		
Fort Bend County		Unclassifiable/Attainment.		

TEXAS—2006 24-HOUR $PM_{2.5}$ NAAQS—Continued

[Primary and secondary]

Designated area	Designation [a]		Classification	
	Date [1]	Type	Date	Type
Galveston County		Unclassifiable/Attainment.		
Harris County		Unclassifiable/Attainment.		
Liberty County		Unclassifiable/Attainment.		
Montgomery County		Unclassifiable/Attainment.		
Waller County		Unclassifiable/Attainment.		
San Antonio, TX:				
Bexar County		Unclassifiable/Attainment.		
Comal County		Unclassifiable/Attainment.		
Guadalupe County		Unclassifiable/Attainment.		
Victoria Area:				
Victoria County		Unclassifiable/Attainment.		

[a] Includes Indian Country located in each county or area, except as otherwise specified.
[1] This date is 30 days after November 13, 2009, unless otherwise noted.

* * * * *

■ 46. Section 81.345 is amended as follows:

■ a. By removing the tables titled ''Utah—$PM_{2.5}$ (Annual NAAQS)'' and ''Utah—$PM_{2.5}$ [24-hour NAAQS]''.

■ b. By adding three tables titled ''Utah—1997 Annual $PM_{2.5}$ NAAQS (Primary and Secondary)'' and ''Utah—1997 24-hour $PM_{2.5}$ NAAQS (Primary and Secondary)'' and ''Utah—2006 24-hour $PM_{2.5}$ NAAQS (Primary and Secondary)'' before the table titled ''Utah—NO_2 (1971 Annual Standard)''.

The additions read as follows:

§ 81.345 Utah.

* * * * *

UTAH—1997 ANNUAL $PM_{2.5}$

NAAQS [Primary and secondary]

Designated area	Designation [a]		Classification	
	Date [1]	Type	Date	Type
Box Elder County, UT (part):				
Box Elder County (except Brigham City)		Unclassifiable/Attainment		
Brigham City, UT:				
Box Elder County (part)		Unclassifiable/Attainment		
The area surrounding Brigham City, as described by the following Townships or the portions of the following Townships in Box Elder County: T9N 2W, T9N R1W, T8N 2W				
Cache County, UT (part):				
Cache County (except Lower Cache Valley)		Unclassifiable/Attainment		
Davis County, UT (part):				
Davis County (except Wasatch Front)		Unclassifiable/Attainment		
Grantsville, UT:				
Tooele County (part)		Unclassifiable/Attainment		
The area surrounding Grantsville, as described by the following Townships or the portions of the following Townships in Tooele County: T2S R6W, T2S R5W, T2S R4W, T3S R6W, T3S R5W, T3S R4W, T4S R6W, T4S R5W, T4S R4W				
Lower Cache Valley, UT:				
Cache County (part)		Unclassifiable/Attainment		
The Cache Valley, below 6500 ft. msl. This area is described by the following list of Townships or the portions of the following Townships in Cache County: T15N R1E, T15N R2W, T15N R1W, T14N R2W, T14N R1W, T14N R1E, T13N R2W, T13N R1W, T13N R1E, T12N R2W, T12N R1W, T12N R1E, T11N R1W, T11N R1E, T10N R1W, T10N R1E, T9N R1E				
Salt Lake County, UT (part):				
Salt Lake County (except Wasatch Front)		Unclassifiable/Attainment		
Tooele County, UT (part):				
Tooele County (remainder)		Unclassifiable/Attainment		
Utah County, UT (part):				
Utah County (except Wasatch Front)		Unclassifiable/Attainment		
Wasatch Front, UT:				
Davis County (part)		Unclassifiable/Attainment		

UTAH—1997 ANNUAL $PM_{2.5}$—Continued

NAAQS [Primary and secondary]

Designated area	Designation [a]		Classification	
	Date [1]	Type	Date	Type
The portion of the Wasatch Front residing in Davis County, as described by the following Townships or the portions of the following Townships in Davis County: T5N R3W, T5N R2W, T5N R1W, T4N R2W, T4N R1W, T3N R1W, T3N R1E, T2N R1W, T2N R1E, T1N R1W, T1N R1E.				
Salt Lake County (part)		Unclassifiable/Attainment		
The portion of the Wasatch Front residing in Salt Lake County, as described by the following Townships or the portions of the following Townships in Salt Lake County: T1N R2W, T1N R1W, T1N R1E, T1S R3W, T1S R2W, T1S R1W, T1S R1E, T2S R3W, T2S R2W, T2S R1W, T2S R1E, T3S R3W, T3S R2W, T3S R1W, T3S R1E, T4S R3W, T4S R2W, T4S R1W, T4S R1E.				
Utah County (part)		Unclassifiable/Attainment		
The portion of the Wasatch Front residing in Utah County, as described by the following Townships or the portions of the following Townships in Utah County: T4S R2W, T4S R1W, T4S R1E, T4S R2E, T5S R2W, T5S R1W, T5S R1E, T5S R2E, T6S R3W, T6S R2W, T6S R1W, T6S R2E, T6S R3E, T6S R1E, T7S R3W, T7S R2W, T7S R1W, T7S R1E, T7S R2E, T7S R3E, T8S R3W, T8S R2W, T8S R1W, T8S R3E, T8S R2E, T8S R1E, T9S R3W, T9S R2W, T9S R1E, T9S R3E, T9S R2E, T9S R1W, T10S 2W, T10S R2E, T10S R1E, T10S R1W, T1S R2W, T11S R1W, T12S R2W.				
Weber County (part)		Unclassifiable/Attainment		
The portion of the Wasatch Front residing in Weber County, as described by the following Townships or the portions of the following Townships in Weber County: T7N R2W, T7N R1W, T7N R3W, T6N R3W, T6N R2W, T6N R1W, T5N R3W, T5N R2W, T5N R1W				
Weber County, UT (part):				
Weber County (except Wasatch Front)		Unclassifiable/Attainment		
Rest of State:				
Beaver County		Unclassifiable/Attainment		
Carbon County		Unclassifiable/Attainment		
Daggett County		Unclassifiable/Attainment		
Duchesne County		Unclassifiable/Attainment		
Emery County		Unclassifiable/Attainment		
Garfield County		Unclassifiable/Attainment		
Grand County		Unclassifiable/Attainment		
Iron County		Unclassifiable/Attainment		
Juab County		Unclassifiable/Attainment		
Kane County		Unclassifiable/Attainment		
Millard County		Unclassifiable/Attainment		
Morgan County		Unclassifiable/Attainment		
Piute County		Unclassifiable/Attainment		
Rich County		Unclassifiable/Attainment		
San Juan County		Unclassifiable/Attainment		
Sanpete County		Unclassifiable/Attainment		
Sevier County		Unclassifiable/Attainment		
Summit County		Unclassifiable/Attainment		
Uintah County		Unclassifiable/Attainment		
Wasatch County		Unclassifiable/Attainment		
Washington County		Unclassifiable/Attainment		
Wayne County		Unclassifiable/Attainment		

[a] Includes Indian Country located in each county or area, except as otherwise specified.

[1] This date is 90 days after January 5, 2005, unless otherwise noted.

UTAH—1997 24-HOUR $PM_{2.5}$ NAAQS

[Primary and secondary]

Designated area	Designation [a]		Classification	
	Date [1]	Type	Date	Type
Logan, UT–ID:				
Cache County (part)		Unclassifiable/Attainment.		
All portions of Cache County west of and including any portion of the following townships located within Utah: Township 15 North Range 1 East; Township 14 North Range 1 East; Township 13 North Range 1 East; Township 12 North Range 1 East; Township 11 North Range 1 East; Township 10 North Range 1 East; Township 9 North Range 1 East.				
Provo, UT:				
Utah County (part)		Unclassifiable/Attainment.		
The area of Utah County that lies west of the Wasatch Mountain Range (and this includes the Cities of Provo and Orem) with an eastern boundary for Utah County to be defined as the following Townships: Township 3 South Range 1 East; Township 4 South Range 2 East; Township 5 South Range 3 East; Township 6 South Range 3 East; Township 7 South Range 3 East; Township 8 South Range 3 East; Township 9 South Range 3 East; Township 10 South Range 2 East.				
Salt Lake City, UT:				
Box Elder County (part)		Unclassifiable/Attainment.		
The following Townships or portions thereof as noted (including Brigham City): Township 7 North Range 2 West; Township 8 North Range 2 West; Township 9 North Range 2 West; Township 10 North Range 2 West; Township 11 North Range 2 West; Township 12 North Range 2 West; Township 13 North Range 2 West; Township 9 North Range 3 West; Township 10 North Range 3 West; Township 11 North Range 3 West; Township 12 North Range 3 West; Township 13 North Range 3 West; Township 13 North Range 4 West; Township 12 North Range 4 West; Township 11 North Range 4 West; Township 10 North Range 4 West; Township 9 North Range 4 West; Township 13 North Range 5 West; Township 12 North Range 5 West; Township 11 North Range 5 West; Township 10 North Range 5 West; Township 9 North Range 5 West; Township 13 North Range 6 West; Township 12 North Range 6 West; Township 11 North Range 6 West; Township 10 North Range 6 West; Township 9 North Range 6 West; Township 7 North Range 1 West (portion located in Box Elder County); Township 8 North Range 1 West (portion located in Box Elder County); Township 9 North Range 1 West (portion located in Box Elder County).				
Davis County		Unclassifiable/Attainment.		
Salt Lake County		Unclassifiable/Attainment.		
Tooele County (part)		Unclassifiable/Attainment.		

UTAH—1997 24-HOUR $PM_{2.5}$ NAAQS—Continued

[Primary and secondary]

Designated area	Designation [a]		Classification	
	Date [1]	Type	Date	Type
The following Townships or portions thereof as noted (including Tooele City: Township 1 South Range 3 West; Township 2 South Range 3 West; Township 3 South Range 3 West; Township 3 South Range 4 West; Township 2 South Range 4 West; Township 2 South Range 5 West; Township 3 South Range 5 West; Township 3 South Range 6 West; Township 2 South Range 6 West; Township 1 South Range 6 West; Township 1 South Range 5 West; Township 1 South Range 4 West; Township 1 South Range 7 West; Township 2 South Range 7 West; Township 3 South Range 7 West; all Sections within Township 4 South Range 7 West except for Sections 29, 30, 31 and 32; Township 4 South Range 6 West; Township 4 South Range 5 West; Township 4 South Range 4 West; Township 4 South Range 3 West.				
Weber County (part)		Unclassifiable/Attainment.		
The area of Weber County that lies west of the Wasatch Mountain Range with an eastern boundary for Weber County to be defined as the following Townships (or portion thereof) extending to the western boundary of Weber County: Township 5 North Range 1 West; Township 6 North Range 1 West; all Sections within Township 7 North Range 1 West located within Weber County except for Sections 1, 2, 3, 4, 11, 12, 13 and 24; Township 7 North Range 2 West (portion located in Weber County).				
Rest of State:				
Beaver County		Unclassifiable/Attainment.		
Box Elder County (remainder)		Unclassifiable/Attainment.		
Cache County (remainder)		Unclassifiable/Attainment.		
Carbon County		Unclassifiable/Attainment.		
Daggett County		Unclassifiable/Attainment.		
Duchesne County		Unclassifiable/Attainment.		
Emery County		Unclassifiable/Attainment.		
Garfield County		Unclassifiable/Attainment.		
Grand County		Unclassifiable/Attainment.		
Iron County		Unclassifiable/Attainment.		
Juab County		Unclassifiable/Attainment.		
Kane County		Unclassifiable/Attainment.		
Millard County		Unclassifiable/Attainment.		
Morgan County		Unclassifiable/Attainment.		
Piute County		Unclassifiable/Attainment.		
Rich County		Unclassifiable/Attainment.		
San Juan County		Unclassifiable/Attainment.		
Sanpete County		Unclassifiable/Attainment.		
Sevier County		Unclassifiable/Attainment.		
Summit County		Unclassifiable/Attainment.		
Tooele County (remainder)		Unclassifiable/Attainment.		
Uintah County		Unclassifiable/Attainment.		
Utah County (remainder)		Unclassifiable/Attainment.		
Wasatch County		Unclassifiable/Attainment.		
Washington County		Unclassifiable/Attainment.		
Wayne County		Unclassifiable/Attainment.		
Weber County (remainder)		Unclassifiable/Attainment.		

[a]Includes Indian Country located in each county or area, except as otherwise specified.
[1]This date is 90 days after January 5, 2005, unless otherwise noted.

UTAH—2006 24-HOUR $PM_{2.5}$ NAAQS

[Primary and secondary]

Designated area	Designation [a]		Classification	
	Date [1]	Type	Date [2]	Type
Logan, UT–ID:				

UTAH—2006 24-HOUR $PM_{2.5}$ NAAQS—Continued

[Primary and secondary]

Designated area	Designation [a]		Classification	
	Date [1]	Type	Date [2]	Type
Cache County (part)		NonAttainment		Moderate.
All portions of Cache County west of and including any portion of the following townships located within Utah: Township 15 North Range 1 East; Township 14 North Range 1 East; Township 13 North Range 1 East; Township 12 North Range 1 East; Township 11 North Range 1 East; Township 10 North Range 1 East; Township 9 North Range 1 East.				
Provo, UT:				
Utah County (part)		NonAttainment		Moderate.
The area of Utah County that lies west of the Wasatch Mountain Range (and this includes the Cities of Provo and Orem) with an eastern boundary for Utah County to be defined as the following Townships: Township 3 South Range 1 East; Township 4 South Range 2 East; Township 5 South Range 3 East; Township 6 South Range 3 East; Township 7 South Range 3 East; Township 8 South Range 3 East; Township 9 South Range 3 East; Township 10 South Range 2 East.				
Salt Lake City, UT:				
Box Elder County (part)		NonAttainment		Moderate.
The following Townships or portions thereof as noted (including Brigham City): Township 7 North Range 2 West; Township 8 North Range 2 West; Township 9 North Range 2 West; Township 10 North Range 2 West; Township 11 North Range 2 West; Township 12 North Range 2 West; Township 13 North Range 2 West; Township 9 North Range 3 West; Township 10 North Range 3 West; Township 11 North Range 3 West; Township 12 North Range 3 West; Township 13 North Range 3 West; Township 13 North Range 4 West; Township 12 North Range 4 West; Township 11 North Range 4 West; Township 10 North Range 4 West; Township 9 North Range 4 West; Township 13 North Range 5 West; Township 12 North Range 5 West; Township 11 North Range 5 West; Township 10 North Range 5 West; Township 9 North Range 5 West; Township 13 North Range 6 West; Township 12 North Range 6 West; Township 11 North Range 6 West; Township 10 North Range 6 West; Township 9 North Range 6 West; Township 7 North Range 1 West (portion located in Box Elder County); Township 8 North Range 1 West (portion located in Box Elder County); Township 9 North Range 1 West (portion located in Box Elder County).				
Davis County		NonAttainment		Moderate.
Salt Lake County		NonAttainment		Moderate.
Tooele County (part)		NonAttainment		Moderate.

UTAH—2006 24-HOUR $PM_{2.5}$ NAAQS—Continued

[Primary and secondary]

Designated area	Designation [a]		Classification	
	Date [1]	Type	Date [2]	Type
The following Townships or portions thereof as noted (including Tooele City: Township 1 South Range 3 West; Township 2 South Range 3 West; Township 3 South Range 3 West; Township 3 South Range 4 West; Township 2 South Range 4 West; Township 2 South Range 5 West; Township 3 South Range 5 West; Township 3 South Range 6 West; Township 2 South Range 6 West; Township 1 South Range 6 West; Township 1 South Range 5 West; Township 1 South Range 4 West; Township 1 South Range 7 West; Township 2 South Range 7 West; Township 3 South Range 7 West; all Sections within Township 4 South Range 7 West except for Sections 29, 30, 31 and 32; Township 4 South Range 6 West; Township 4 South Range 5 West; Township 4 South Range 4 West; Township 4 South Range 3 West.				
Weber County (part)		NonAttainment		Moderate.
The area of Weber County that lies west of the Wasatch Mountain Range with an eastern boundary for Weber County to be defined as the following Townships (or portion thereof) extending to the western boundary of Weber County: Township 5 North Range 1 West; Township 6 North Range 1 West; all Sections within Township 7 North Range 1 West located within Weber County except for Sections 1, 2, 3, 4, 11, 12, 13 and 24; Township 7 North Range 2 West (portion located in Weber County).				
Rest of State:				
Beaver County		Unclassifiable/Attainment.		
Box Elder County (remainder)		Unclassifiable/Attainment.		
Cache County (remainder)		Unclassifiable/Attainment.		
Carbon County		Unclassifiable/Attainment.		
Daggett County		Unclassifiable/Attainment.		
Duchesne County		Unclassifiable/Attainment.		
Emery County		Unclassifiable/Attainment.		
Garfield County		Unclassifiable/Attainment.		
Grand County		Unclassifiable/Attainment.		
Iron County		Unclassifiable/Attainment.		
Juab County		Unclassifiable/Attainment.		
Kane County		Unclassifiable/Attainment.		
Millard County		Unclassifiable/Attainment.		
Morgan County		Unclassifiable/Attainment.		
Piute County		Unclassifiable/Attainment.		
Rich County		Unclassifiable/Attainment.		
San Juan County		Unclassifiable/Attainment.		
Sanpete County		Unclassifiable/Attainment.		
Sevier County		Unclassifiable/Attainment.		
Summit County		Unclassifiable/Attainment.		
Tooele County (remainder)		Unclassifiable/Attainment.		
Uintah County		Unclassifiable/Attainment.		
Utah County (remainder)		Unclassifiable/Attainment.		
Wasatch County		Unclassifiable/Attainment.		
Washington County		Unclassifiable/Attainment.		
Wayne County		Unclassifiable/Attainment.		
Weber County (remainder)		Unclassifiable/Attainment.		

[a] Includes Indian Country located in each county or area, except as otherwise specified.
[1] This date is 30 days after November 13, 2009, unless otherwise noted.
[2] This date is July 2, 2034, unless otherwise noted.

* * * * *

■ 47. Section 81.346 is amended as follows:

■ a. By removing the tables titled ''Vermont—$PM_{2.5}$ (Annual NAAQS)'' and ''Vermont—$PM_{2.5}$ [24-hour NAAQS]''.

■ b. By adding three tables titled ''Vermont—1997 Annual $PM_{2.5}$ NAAQS (Primary and Secondary)'' and ''Vermont—1997 24-hour $PM_{2.5}$ NAAQS (Primary and Secondary)'' and ''Vermont—2006 24-hour $PM_{2.5}$ NAAQS (Primary and Secondary)'' before the

table titled ''Vermont—NO_2 (1971 Annual Standard)''.

The additions read as follows:

§ 81.346 Vermont.

* * * * *

VERMONT—1997 ANNUAL $PM_{2.5}$ NAAQS

[Primary and secondary]

Designated area	Designation [a]		Classification	
	Date [1]	Type	Date	Type
Statewide:				
Addison County		Unclassifiable/Attainment.		
Bennington County		Unclassifiable/Attainment.		
Caledonia County		Unclassifiable/Attainment.		
Chittenden County		Unclassifiable/Attainment.		
Essex County		Unclassifiable/Attainment.		
Franklin County		Unclassifiable/Attainment.		
Grand Isle County		Unclassifiable/Attainment.		
Lamoille County		Unclassifiable/Attainment.		
Orange County		Unclassifiable/Attainment.		
Orleans County		Unclassifiable/Attainment.		
Rutland County		Unclassifiable/Attainment.		
Washington County		Unclassifiable/Attainment.		
Windham County		Unclassifiable/Attainment.		
Windsor County		Unclassifiable/Attainment.		

[a] Includes Indian Country located in each county or area, except as otherwise specified.
[1] This date is 90 days after January 5, 2005, unless otherwise noted.

VERMONT—1997 24-HOUR $PM_{2.5}$ NAAQS

[Primary and secondary]

Designated area	Designation [a]		Classification	
	Date [1]	Type	Date	Type
Statewide:				
Addison County		Unclassifiable Attainment.		
Bennington County		Unclassifiable Attainment.		
Caledonia County		Unclassifiable Attainment.		
Chittenden County		Unclassifiable Attainment.		
Essex County		Unclassifiable Attainment.		
Franklin County		Unclassifiable Attainment.		
Grand Isle County		Unclassifiable Attainment.		
Lamoille County		Unclassifiable Attainment.		
Orange County		Unclassifiable Attainment.		
Orleans County		Unclassifiable Attainment.		
Rutland County		Unclassifiable Attainment.		
Washington County		Unclassifiable Attainment.		
Windham County		Unclassifiable Attainment.		
Windsor County		Unclassifiable Attainment.		

[a] Includes Indian Country located in each county or area, except as otherwise specified.
[1] This date is 90 days after January 5, 2005, unless otherwise noted.

VERMONT—2006 24-HOUR $PM_{2.5}$ NAAQS

[Primary and secondary]

Designated area	Designation [a]		Classification	
	Date [1]	Type	Date	Type
Statewide:				
Addison County		Unclassifiable Attainment.		
Bennington County		Unclassifiable Attainment.		
Caledonia County		Unclassifiable Attainment.		
Chittenden County		Unclassifiable Attainment.		
Essex County		Unclassifiable Attainment.		
Franklin County		Unclassifiable Attainment.		
Grand Isle County		Unclassifiable Attainment.		
Lamoille County		Unclassifiable Attainment.		
Orange County		Unclassifiable Attainment.		
Orleans County		Unclassifiable Attainment.		
Rutland County		Unclassifiable Attainment.		
Washington County		Unclassifiable Attainment.		
Windham County		Unclassifiable Attainment.		

VERMONT—2006 24-HOUR $PM_{2.5}$ NAAQS—Continued

[Primary and secondary]

Designated area	Designation [a]		Classification	
	Date [1]	Type	Date	Type
Windsor County		Unclassifiable Attainment.		

[a] Includes Indian Country located in each county or area, except as otherwise specified.
[1] This date is 30 days after November 13, 2009, unless otherwise noted.

* * * * *

■ 48. Section 81.347 is amended as follows:

■ a. By removing the tables titled ''Virginia—$PM_{2.5}$ (Annual NAAQS)'' and ''Virginia—$PM_{2.5}$ [24-hour NAAQS]''.

■ b. By adding three tables titled ''Virginia—1997 Annual $PM_{2.5}$ NAAQS (Primary and Secondary)'' and ''Virginia—1997 24-hour $PM_{2.5}$ NAAQS (Primary and Secondary)'' and ''Virginia—2006 24-hour $PM_{2.5}$ NAAQS (Primary and Secondary)'' before the table titled ''Virginia—NO_2 (1971 Annual Standard)''.

The additions read as follows:

§ 81.347 Virginia.

* * * * *

VIRGINIA—1997 ANNUAL $PM_{2.5}$ NAAQS

(Primary and secondary)

Designated area	Designation [a]		Classification	
	Date [1]	Type	Date [2]	Type
Washington, DC–MD–VA:				
Arlington County		Nonattainment.		Moderate.
Fairfax County		Nonattainment.		Moderate.
Loudoun County		Nonattainment.		Moderate.
Prince William County		Nonattainment.		Moderate.
Alexandria City		Nonattainment.		Moderate.
Fairfax City		Nonattainment.		Moderate.
Falls Church City		Nonattainment.		Moderate.
Manassas City		Nonattainment.		Moderate.
Manassas Park City		Nonattainment.		Moderate.
AQCR 207 Eastern Tennessee–SW Virginia Interstate (remainder of):				
Bland County		Unclassifiable/Attainment.		
Buchanan County		Unclassifiable/Attainment.		
Carroll County		Unclassifiable/Attainment.		
Dickenson County		Unclassifiable/Attainment.		
Grayson County		Unclassifiable/Attainment.		
Lee County		Unclassifiable/Attainment.		
Russell County		Unclassifiable/Attainment.		
Scott County		Unclassifiable/Attainment.		
Smyth County		Unclassifiable/Attainment.		
Tazewell County		Unclassifiable/Attainment.		
Washington County		Unclassifiable/Attainment.		
Wise County		Unclassifiable/Attainment.		
Wythe County		Unclassifiable/Attainment.		
Bristol City		Unclassifiable/Attainment.		
Galax City		Unclassifiable/Attainment.		
Norton City		Unclassifiable/Attainment.		
AQCR 222 Central Virginia Intrastate:				
Amelia County		Unclassifiable/Attainment.		
Amherst County		Unclassifiable/Attainment.		
Appomattox County		Unclassifiable/Attainment.		
Bedford County		Unclassifiable/Attainment.		
Brunswick County		Unclassifiable/Attainment.		
Buckingham County		Unclassifiable/Attainment.		
Campbell County		Unclassifiable/Attainment.		
Charlotte County		Unclassifiable/Attainment.		
Cumberland County		Unclassifiable/Attainment.		
Franklin County		Unclassifiable/Attainment.		
Halifax County		Unclassifiable/Attainment.		
Henry County		Unclassifiable/Attainment.		
Lunenburg County		Unclassifiable/Attainment.		
Mecklenburg County		Unclassifiable/Attainment.		
Nottoway County		Unclassifiable/Attainment.		
Patrick County		Unclassifiable/Attainment.		
Pittsylvania County		Unclassifiable/Attainment.		
Prince Edward County		Unclassifiable/Attainment.		

VIRGINIA—1997 ANNUAL $PM_{2.5}$ NAAQS—Continued

(Primary and secondary)

Designated area	Designation [a]		Classification	
	Date [1]	Type	Date [2]	Type
Bedford City		Unclassifiable/Attainment.		
Danville City		Unclassifiable/Attainment.		
Lynchburg City		Unclassifiable/Attainment.		
Martinsville City		Unclassifiable/Attainment.		
AQCR 223 Hampton Roads Intrastate (remainder of):				
Southampton County		Unclassifiable/Attainment.		
Franklin City		Unclassifiable/Attainment.		
AQCR 224 NE Virginia Intrastate (remainder of):				
Accomack County		Unclassifiable/Attainment.		
Albemarle County		Unclassifiable/Attainment.		
Caroline County		Unclassifiable/Attainment.		
Culpeper County		Unclassifiable/Attainment.		
Essex County		Unclassifiable/Attainment.		
Fauquier County		Unclassifiable/Attainment.		
Fluvanna County		Unclassifiable/Attainment.		
Greene County		Unclassifiable/Attainment.		
King and Queen County		Unclassifiable/Attainment.		
King George County		Unclassifiable/Attainment.		
King William County		Unclassifiable/Attainment.		
Lancaster County		Unclassifiable/Attainment.		
Louisa County		Unclassifiable/Attainment.		
Madison County		Unclassifiable/Attainment.		
Mathews County		Unclassifiable/Attainment.		
Middlesex County		Unclassifiable/Attainment.		
Nelson County		Unclassifiable/Attainment.		
Northampton County		Unclassifiable/Attainment.		
Northumberland County		Unclassifiable/Attainment.		
Orange County		Unclassifiable/Attainment.		
Rappahannock County		Unclassifiable/Attainment.		
Richmond County		Unclassifiable/Attainment.		
Westmoreland County		Unclassifiable/Attainment.		
Charlottesville City		Unclassifiable/Attainment.		
AQCR 225 State Capital Intrastate (remainder of):				
Dinwiddie County		Unclassifiable/Attainment.		
Goochland County		Unclassifiable/Attainment.		
Greensville County		Unclassifiable/Attainment.		
New Kent County		Unclassifiable/Attainment.		
Powhatan County		Unclassifiable/Attainment.		
Surry County		Unclassifiable/Attainment.		
Sussex County		Unclassifiable/Attainment.		
Emporia City		Unclassifiable/Attainment.		
Petersburg City		Unclassifiable/Attainment.		
AQCR 226 Valley of Virginia Intrastate:				
Alleghany County		Unclassifiable/Attainment.		
Augusta County		Unclassifiable/Attainment.		
Bath County		Unclassifiable/Attainment.		
Clarke County		Unclassifiable/Attainment.		
Craig County		Unclassifiable/Attainment.		
Floyd County		Unclassifiable/Attainment.		
Giles County		Unclassifiable/Attainment.		
Highland County		Unclassifiable/Attainment.		
Montgomery County		Unclassifiable/Attainment.		
Page County		Unclassifiable/Attainment.		
Pulaski County		Unclassifiable/Attainment.		
Rockbridge County		Unclassifiable/Attainment.		
Rockingham County		Unclassifiable/Attainment.		
Shenandoah County		Unclassifiable/Attainment.		
Warren County		Unclassifiable/Attainment.		
Buena Vista City		Unclassifiable/Attainment.		
Covington City		Unclassifiable/Attainment.		
Harrisonburg City		Unclassifiable/Attainment.		
Lexington City		Unclassifiable/Attainment.		
Radford City		Unclassifiable/Attainment.		
Staunton City		Unclassifiable/Attainment.		
Waynesboro City		Unclassifiable/Attainment.		
Frederick Co., VA:				
Frederick County		Unclassifiable/Attainment.		
Winchester City		Unclassifiable/Attainment.		
Fredericksburg, VA:				

VIRGINIA—1997 ANNUAL $PM_{2.5}$ NAAQS—Continued

(Primary and secondary)

Designated area	Designation [a]		Classification	
	Date [1]	Type	Date [2]	Type
Spotsylvania County		Unclassifiable/Attainment.		
Stafford County		Unclassifiable/Attainment.		
City of Fredericksburg		Unclassifiable/Attainment.		
Norfolk-Virginia-Beach Newport News (Hampton Roads), VA:				
Gloucester County		Unclassifiable/Attainment.		
Isle of Wight County		Unclassifiable/Attainment.		
James City County		Unclassifiable/Attainment.		
York County		Unclassifiable/Attainment.		
Chesapeake City		Unclassifiable/Attainment.		
Hampton City		Unclassifiable/Attainment.		
Newport News City		Unclassifiable/Attainment.		
Norfolk City		Unclassifiable/Attainment.		
Poquoson City		Unclassifiable/Attainment.		
Portsmouth City		Unclassifiable/Attainment.		
Suffolk City		Unclassifiable/Attainment.		
Virginia Beach City		Unclassifiable/Attainment.		
Williamsburg City		Unclassifiable/Attainment.		
Richmond-Petersburg, VA:				
Charles City County		Unclassifiable/Attainment.		
Chesterfield County		Unclassifiable/Attainment.		
Hanover County		Unclassifiable/Attainment.		
Henrico County		Unclassifiable/Attainment.		
Prince George County		Unclassifiable/Attainment.		
Colonial Heights City		Unclassifiable/Attainment.		
Hopewell City		Unclassifiable/Attainment.		
Richmond City		Unclassifiable/Attainment.		
Roanoke, VA:				
Botetourt County		Unclassifiable/Attainment.		
Roanoke County		Unclassifiable/Attainment.		
Roanoke City		Unclassifiable/Attainment.		
Salem City		Unclassifiable/Attainment.		

[a] Includes Indian Country located in each county or area, except as otherwise specified.
[1] This date is 90 days after January 5, 2005, unless otherwise noted.
[2] This date is July 2, 2014, unless otherwise noted.

VIRGINIA—1997 24-HOUR $PM_{2.5}$ NAAQS

[Primary and secondary]

Designated area	Designation [a]		Classification	
	Date [1]	Type	Date [2]	Type
AQCR 047 National Capital Interstate (DC–MD–VA) (part):				
Arlington County		Unclassifiable/Attainment.		
Fairfax County		Unclassifiable/Attainment.		
Loudoun County		Unclassifiable/Attainment.		
Prince William County		Unclassifiable/Attainment.		
Alexandria City		Unclassifiable/Attainment.		
Fairfax City		Unclassifiable/Attainment.		
Falls Church City		Unclassifiable/Attainment.		
Manassas City		Unclassifiable/Attainment.		
Manassas Park City		Unclassifiable/Attainment.		
AQCR 207 Eastern Tennessee–SW Virginia Interstate (remainder of):				
Bland County		Unclassifiable/Attainment.		
Buchanan County		Unclassifiable/Attainment.		
Carroll County		Unclassifiable/Attainment.		
Dickenson County		Unclassifiable/Attainment.		
Grayson County		Unclassifiable/Attainment.		
Lee County		Unclassifiable/Attainment.		
Russell County		Unclassifiable/Attainment.		
Scott County		Unclassifiable/Attainment.		
Smyth County		Unclassifiable/Attainment.		
Tazewell County		Unclassifiable/Attainment.		
Washington County		Unclassifiable/Attainment.		
Wise County		Unclassifiable/Attainment.		
Wythe County		Unclassifiable/Attainment.		
Bristol City		Unclassifiable/Attainment.		

VIRGINIA—1997 24-HOUR $PM_{2.5}$ NAAQS—Continued

[Primary and secondary]

Designated area	Designation [a]		Classification	
	Date [1]	Type	Date [2]	Type
Galax City		Unclassifiable/Attainment.		
Norton City		Unclassifiable/Attainment.		
AQCR 222 Central Virginia Intrastate:				
Amelia County		Unclassifiable/Attainment.		
Amherst County		Unclassifiable/Attainment.		
Appomattox County		Unclassifiable/Attainment.		
Bedford County		Unclassifiable/Attainment.		
Brunswick County		Unclassifiable/Attainment.		
Buckingham County		Unclassifiable/Attainment.		
Campbell County		Unclassifiable/Attainment.		
Charlotte County		Unclassifiable/Attainment.		
Cumberland County		Unclassifiable/Attainment.		
Franklin County		Unclassifiable/Attainment.		
Halifax County		Unclassifiable/Attainment.		
Henry County		Unclassifiable/Attainment.		
Lunenburg County		Unclassifiable/Attainment.		
Mecklenburg County		Unclassifiable/Attainment.		
Nottoway County		Unclassifiable/Attainment.		
Patrick County		Unclassifiable/Attainment.		
Pittsylvania County		Unclassifiable/Attainment.		
Prince Edward County		Unclassifiable/Attainment.		
Bedford City		Unclassifiable/Attainment.		
Danville City		Unclassifiable/Attainment.		
Lynchburg City		Unclassifiable/Attainment.		
Martinsville City		Unclassifiable/Attainment.		
AQCR 223 Hampton Roads Intrastate (remainder of):				
Southampton County		Unclassifiable/Attainment.		
Franklin City		Unclassifiable/Attainment.		
AQCR 224 NE Virginia Intrastate (remainder of):				
Accomack County		Unclassifiable/Attainment.		
Albemarle County		Unclassifiable/Attainment.		
Caroline County		Unclassifiable/Attainment.		
Culpeper County		Unclassifiable/Attainment.		
Essex County		Unclassifiable/Attainment.		
Fauquier County		Unclassifiable/Attainment.		
Fluvanna County		Unclassifiable/Attainment.		
Greene County		Unclassifiable/Attainment.		
King and Queen County		Unclassifiable/Attainment.		
King George County		Unclassifiable/Attainment.		
King William County		Unclassifiable/Attainment.		
Lancaster County		Unclassifiable/Attainment.		
Louisa County		Unclassifiable/Attainment.		
Madison County		Unclassifiable/Attainment.		
Mathews County		Unclassifiable/Attainment.		
Middlesex County		Unclassifiable/Attainment.		
Nelson County		Unclassifiable/Attainment.		
Northampton County		Unclassifiable/Attainment.		
Northumberland County		Unclassifiable/Attainment.		
Orange County		Unclassifiable/Attainment.		
Rappahannock County		Unclassifiable/Attainment.		
Richmond County		Unclassifiable/Attainment.		
Westmoreland County		Unclassifiable/Attainment.		
Charlottesville City		Unclassifiable/Attainment.		
AQCR 225 State Capital Intrastate (remainder of):				
Dinwiddie County		Unclassifiable/Attainment.		
Goochland County		Unclassifiable/Attainment.		
Greensville County		Unclassifiable/Attainment.		
New Kent County		Unclassifiable/Attainment.		
Powhatan County		Unclassifiable/Attainment.		
Surry County		Unclassifiable/Attainment.		
Sussex County		Unclassifiable/Attainment.		
Emporia City		Unclassifiable/Attainment.		
Petersburg City		Unclassifiable/Attainment.		
AQCR 226 Valley of Virginia Intrastate:				
Alleghany County		Unclassifiable/Attainment.		
Augusta County		Unclassifiable/Attainment.		
Bath County		Unclassifiable/Attainment.		
Clarke County		Unclassifiable/Attainment.		
Craig County		Unclassifiable/Attainment.		

VIRGINIA—1997 24-HOUR $PM_{2.5}$ NAAQS—Continued

[Primary and secondary]

Designated area	Designation [a]		Classification	
	Date [1]	Type	Date [2]	Type
Floyd County		Unclassifiable/Attainment.		
Giles County		Unclassifiable/Attainment.		
Highland County		Unclassifiable/Attainment.		
Montgomery County		Unclassifiable/Attainment.		
Page County		Unclassifiable/Attainment.		
Pulaski County		Unclassifiable/Attainment.		
Rockbridge County		Unclassifiable/Attainment.		
Rockingham County		Unclassifiable/Attainment.		
Shenandoah County		Unclassifiable/Attainment.		
Warren County		Unclassifiable/Attainment.		
Buena Vista City		Unclassifiable/Attainment.		
Covington City		Unclassifiable/Attainment.		
Harrisonburg City		Unclassifiable/Attainment.		
Lexington City		Unclassifiable/Attainment.		
Radford City		Unclassifiable/Attainment.		
Staunton City		Unclassifiable/Attainment.		
Waynesboro City		Unclassifiable/Attainment.		
Frederick Co., VA:				
Frederick County		Unclassifiable/Attainment.		
Winchester City		Unclassifiable/Attainment.		
Fredericksburg, VA:				
Spotsylvania County		Unclassifiable/Attainment.		
Stafford County		Unclassifiable/Attainment.		
City of Fredericksburg		Unclassifiable/Attainment.		
Norfolk-Virginia Beach-Newport News (Hampton Roads), VA:				
Gloucester County		Unclassifiable/Attainment.		
Isle of Wight County		Unclassifiable/Attainment.		
James City County		Unclassifiable/Attainment.		
York County		Unclassifiable/Attainment.		
Chesapeake City		Unclassifiable/Attainment.		
Hampton City		Unclassifiable/Attainment.		
Newport News City		Unclassifiable/Attainment.		
Norfolk City		Unclassifiable/Attainment.		
Poquoson City		Unclassifiable/Attainment.		
Portsmouth City		Unclassifiable/Attainment.		
Suffolk City		Unclassifiable/Attainment.		
Virginia Beach City		Unclassifiable/Attainment.		
Williamsburg City		Unclassifiable/Attainment.		
Richmond-Petersburg, VA:				
Charles City County		Unclassifiable/Attainment.		
Chesterfield County		Unclassifiable/Attainment.		
Hanover County		Unclassifiable/Attainment.		
Henrico County		Unclassifiable/Attainment.		
Prince George County		Unclassifiable/Attainment.		
Colonial Heights City		Unclassifiable/Attainment.		
Hopewell City		Unclassifiable/Attainment.		
Richmond City		Unclassifiable/Attainment.		
Roanoke, VA:				
Botetourt County		Unclassifiable/Attainment.		
Roanoke County		Unclassifiable/Attainment.		
Roanoke City		Unclassifiable/Attainment.		
Salem City		Unclassifiable/Attainment.		

[a] Includes Indian Country located in each county or area, except as otherwise specified.
[1] This date is 90 days after January 5, 2005, unless otherwise noted.

VIRGINIA—2006 24-HOUR $PM_{2.5}$ NAAQS

[Primary and secondary]

Designated area	Designation[a]		Classification	
	Date[1]	Type	Date	Type
AQCR 047 National Capital Interstate (DC–MD–VA) (part):				
Arlington County		Unclassifiable/Attainment..		
Fairfax County		Unclassifiable/Attainment..		
Loudoun County		Unclassifiable/Attainment..		
Prince William County		Unclassifiable/Attainment..		
Alexandria City		Unclassifiable/Attainment..		

VIRGINIA—2006 24-HOUR $PM_{2.5}$ NAAQS—Continued

[Primary and secondary]

Designated area	Designation[a]		Classification	
	Date[1]	Type	Date	Type
Fairfax City		Unclassifiable/Attainment		
Falls Church City		Unclassifiable/Attainment		
Manassas City		Unclassifiable/Attainment		
Manassas Park City		Unclassifiable/Attainment		
AQCR 207 Eastern Tennessee-SW Virginia Interstate (remainder of):				
Bland County		Unclassifiable/Attainment		
Buchanan County		Unclassifiable/Attainment		
Carroll County		Unclassifiable/Attainment		
Dickenson County		Unclassifiable/Attainment		
Grayson County		Unclassifiable/Attainment		
Lee County		Unclassifiable/Attainment		
Russell County		Unclassifiable/Attainment		
Scott County		Unclassifiable/Attainment		
Smyth County		Unclassifiable/Attainment		
Tazewell County		Unclassifiable/Attainment		
Washington County		Unclassifiable/Attainment		
Wise County		Unclassifiable/Attainment		
Wythe County		Unclassifiable/Attainment		
Bristol City		Unclassifiable/Attainment		
Galax City		Unclassifiable/Attainment		
Norton City		Unclassifiable/Attainment		
AQCR 222 Central Virginia Intrastate:				
Amelia County		Unclassifiable/Attainment		
Amherst County		Unclassifiable/Attainment		
Appomattox County		Unclassifiable/Attainment		
Bedford County		Unclassifiable/Attainment		
Brunswick County		Unclassifiable/Attainment		
Buckingham County		Unclassifiable/Attainment		
Campbell County		Unclassifiable/Attainment		
Charlotte County		Unclassifiable/Attainment		
Cumberland County		Unclassifiable/Attainment		
Franklin County		Unclassifiable/Attainment		
Halifax County		Unclassifiable/Attainment		
Henry County		Unclassifiable/Attainment		
Lunenburg County		Unclassifiable/Attainment		
Mecklenburg County		Unclassifiable/Attainment		
Nottoway County		Unclassifiable/Attainment		
Patrick County		Unclassifiable/Attainment		
Pittsylvania County		Unclassifiable/Attainment		
Prince Edward County		Unclassifiable/Attainment		
Bedford City		Unclassifiable/Attainment		
Danville City		Unclassifiable/Attainment		
Lynchburg City		Unclassifiable/Attainment		
Martinsville City		Unclassifiable/Attainment		
AQCR 223 Hampton Roads Intrastate (remainder of):				
Southampton County		Unclassifiable/Attainment		
Franklin City		Unclassifiable/Attainment		
AQCR 224 NE Virginia Intrastate (remainder of):				
Accomack County		Unclassifiable/Attainment		
Albemarle County		Unclassifiable/Attainment		
Caroline County		Unclassifiable/Attainment		
Culpeper County		Unclassifiable/Attainment		
Essex County		Unclassifiable/Attainment		
Fauquier County		Unclassifiable/Attainment		
Fluvanna County		Unclassifiable/Attainment		
Greene County		Unclassifiable/Attainment		
King and Queen County		Unclassifiable/Attainment		
King George County		Unclassifiable/Attainment		
King William County		Unclassifiable/Attainment		
Lancaster County		Unclassifiable/Attainment		
Louisa County		Unclassifiable/Attainment		
Madison County		Unclassifiable/Attainment		
Mathews County		Unclassifiable/Attainment		
Middlesex County		Unclassifiable/Attainment		
Nelson County		Unclassifiable/Attainment		
Northampton County		Unclassifiable/Attainment		
Northumberland County		Unclassifiable/Attainment		
Orange County		Unclassifiable/Attainment		

VIRGINIA—2006 24-HOUR $PM_{2.5}$ NAAQS—Continued

[Primary and secondary]

Designated area	Designation[a]		Classification	
	Date[1]	Type	Date	Type
Rappahannock County		Unclassifiable/Attainment..		
Richmond County		Unclassifiable/Attainment..		
Westmoreland County		Unclassifiable/Attainment..		
Charlottesville City		Unclassifiable/Attainment..		
AQCR 225 State Capital Intrastate (remainder of):				
Dinwiddie County		Unclassifiable/Attainment..		
Goochland County		Unclassifiable/Attainment..		
Greensville County		Unclassifiable/Attainment..		
New Kent County		Unclassifiable/Attainment..		
Powhatan County		Unclassifiable/Attainment..		
Surry County		Unclassifiable/Attainment..		
Sussex County		Unclassifiable/Attainment..		
Emporia City		Unclassifiable/Attainment..		
Petersburg City		Unclassifiable/Attainment..		
AQCR 226 Valley of Virginia Intrastate:				
Alleghany County		Unclassifiable/Attainment..		
Augusta County		Unclassifiable/Attainment..		
Bath County		Unclassifiable/Attainment..		
Clarke County		Unclassifiable/Attainment..		
Craig County		Unclassifiable/Attainment..		
Floyd County		Unclassifiable/Attainment..		
Giles County		Unclassifiable/Attainment..		
Highland County		Unclassifiable/Attainment..		
Montgomery County		Unclassifiable/Attainment..		
Page County		Unclassifiable/Attainment..		
Pulaski County		Unclassifiable/Attainment..		
Rockbridge County		Unclassifiable/Attainment..		
Rockingham County		Unclassifiable/Attainment..		
Shenandoah County		Unclassifiable/Attainment..		
Warren County		Unclassifiable/Attainment..		
Buena Vista City		Unclassifiable/Attainment..		
Covington City		Unclassifiable/Attainment..		
Harrisonburg City		Unclassifiable/Attainment..		
Lexington City		Unclassifiable/Attainment..		
Radford City		Unclassifiable/Attainment..		
Staunton City		Unclassifiable/Attainment..		
Waynesboro City		Unclassifiable/Attainment..		
Frederick Co., VA:				
Frederick County		Unclassifiable/Attainment..		
Winchester City		Unclassifiable/Attainment..		
Fredericksburg, VA:				
Spotsylvania County		Unclassifiable/Attainment..		
Stafford County		Unclassifiable/Attainment..		
City of Fredericksburg		Unclassifiable/Attainment..		
Norfolk-Virginia-Beach Newport News (Hampton Roads), VA:				
Gloucester County		Unclassifiable/Attainment..		
Isle of Wight County		Unclassifiable/Attainment..		
James City County		Unclassifiable/Attainment..		
York County		Unclassifiable/Attainment..		
Chesapeake City		Unclassifiable/Attainment..		
Hampton City		Unclassifiable/Attainment..		
Newport News City		Unclassifiable/Attainment..		
Norfolk City		Unclassifiable/Attainment..		
Poquoson City		Unclassifiable/Attainment..		
Portsmouth City		Unclassifiable/Attainment..		
Suffolk City		Unclassifiable/Attainment..		
Virginia Beach City		Unclassifiable/Attainment..		
Williamsburg City		Unclassifiable/Attainment..		
Richmond-Petersburg, VA:				
Charles City County		Unclassifiable/Attainment..		
Chesterfield County		Unclassifiable/Attainment..		
Hanover County		Unclassifiable/Attainment..		
Henrico County		Unclassifiable/Attainment..		
Prince George County		Unclassifiable/Attainment..		
Colonial Heights City		Unclassifiable/Attainment..		
Hopewell City		Unclassifiable/Attainment..		
Richmond City		Unclassifiable/Attainment..		
Roanoke, VA:				
Botetourt County		Unclassifiable/Attainment..		

VIRGINIA—2006 24-HOUR $PM_{2.5}$ NAAQS—Continued

[Primary and secondary]

Designated area	Designation[a]		Classification	
	Date[1]	Type	Date	Type
Roanoke County		Unclassifiable/Attainment..		
Roanoke City		Unclassifiable/Attainment..		
Salem City		Unclassifiable/Attainment..		

[a] Includes Indian Country located in each county or area, except as otherwise specified.
[1] This date is 30 days after November 13, 2009, unless otherwise noted.

* * * * *

■ 49. Section 81.348 is amended as follows:

■ a. By removing the tables titled ''Washington—$PM_{2.5}$ (Annual NAAQS)'' and ''Washington—$PM_{2.5}$ [24-hour NAAQS]''.

■ b. By adding three tables titled ''Washington—1997 Annual $PM_{2.5}$ NAAQS (Primary and Secondary)'' and ''Washington—1997 24-hour $PM_{2.5}$ NAAQS (Primary and Secondary)'' and ''Washington—2006 24-hour $PM_{2.5}$ NAAQS (Primary and Secondary)'' before the table titled ''Washington—NO_2 (1971 Annual Standard)''.

The additions read as follows:

§ 81.348 Washington.

* * * * *

WASHINGTON—1997 ANNUAL $PM_{2.5}$ NAAQS

[Primary and secondary]

Designated area	Designation[a]		Classification	
	Date[1]	Type	Date	Type
Portland—Vancouver AQMA:				
Clark County (part)		Unclassifiable/Attainment.		
Air quality maintenance area				
Seattle—Tacoma Area:		Unclassifiable/Attainment.		

WASHINGTON—1997 ANNUAL $PM_{2.5}$ NAAQS—Continued

[Primary and secondary]

Designated area	Designation [a]		Classification	
	Date [1]	Type	Date	Type
The following boundary includes all of Pierce County, and all of King County except a small portion on the north-east corner and the western portion of Snohomish County: Starting at the mouth of the Nisqually River extend northwesterly along the Pierce County line to the southernmost point of the west county line of King County; thence northerly along the county line to the southernmost point of the west county line of Snohomish County; thence northerly along the county line to the intersection with SR 532; thence easterly along the north line of SR 532 to the intersection of I–5, continuing east along the same road now identified as Henning Rd., to the intersection with SR 9 at Bryant; thence continuing easterly on Bryant East Rd. and Rock Creek Rd., also identified as Grandview Rd., approximately 3 miles to the point at which it is crossed by the existing BPA electrical transmission line; thence southeasterly along the BPA transmission line approximately 8 miles to point of the crossing of the south fork of the Stillaguamish River; thence continuing in a southeasterly direction in a meander line following the bed of the River to Jordan Road; southerly along Jordan Road to the north city limits of Granite Falls; thence following the north and east city limits to 92nd St. N.E. and Menzel Lake Rd.; thence south-southeasterly along the Menzel Lake Rd. and the Lake Roesiger Rd. a distance of approximately 6 miles to the northernmost point of Lake Roesiger; thence southerly along a meander line following the middle of the Lake and Roesiger Creek to Woods Creek; thence southerly along a meander line following the bed of the Creek approximately 6 miles to the point the Creek is crossed by the existing BPA electrical transmission line; thence easterly along the BPA transmission line approximately 0.2 miles; thence southerly along the BPA Chief Joseph-Covington electrical transmission line approximately 3 miles to the north line of SR 2; thence southeasterly along SR 2 to the intersection with the east county line of King County; thence south along the county line to the northernmost point of the east county line of Pierce County; thence along the county line to the point of beginning at the mouth of the Nisqually River.				
AQCR 062 E Washington-N Idaho Interstate (part):				
Spokane County		Unclassifiable/Attainment.		
AQCR 062 E Washington-N Idaho Interstate (remainder of):				
Adams County		Unclassifiable/Attainment.		
Asotin County		Unclassifiable/Attainment.		
Columbia County		Unclassifiable/Attainment.		
Garfield County		Unclassifiable/Attainment.		
Grant County		Unclassifiable/Attainment.		
Lincoln County		Unclassifiable/Attainment.		
Whitman County		Unclassifiable/Attainment.		
AQCR 193 Portland Interstate (remainder of):				
Clark County (remainder)		Unclassifiable/Attainment.		
Cowlitz County		Unclassifiable/Attainment.		
Lewis County		Unclassifiable/Attainment.		
Skamania County		Unclassifiable/Attainment.		
Wahkiakum County		Unclassifiable/Attainment.		
AQCR 227 Northern Washington Intrastate:				
Chelan County		Unclassifiable/Attainment.		
Douglas County		Unclassifiable/Attainment.		
Ferry County		Unclassifiable/Attainment.		
Okanogan County		Unclassifiable/Attainment.		

WASHINGTON—1997 ANNUAL $PM_{2.5}$ NAAQS—Continued

[Primary and secondary]

Designated area	Designation [a]		Classification	
	Date [1]	Type	Date	Type
Pend Oreille County		Unclassifiable/Attainment.		
Stevens County		Unclassifiable/Attainment.		
AQCR 228 Olympic-Northwest Washington Intrastate:				
Clallam County		Unclassifiable/Attainment.		
Grays Harbor County		Unclassifiable/Attainment.		
Island County		Unclassifiable/Attainment.		
Jefferson County		Unclassifiable/Attainment.		
Mason County		Unclassifiable/Attainment.		
Pacific County		Unclassifiable/Attainment.		
San Juan County		Unclassifiable/Attainment.		
Skagit County		Unclassifiable/Attainment.		
Thurston County		Unclassifiable/Attainment.		
Whatcom County		Unclassifiable/Attainment.		
AQCR 229 Puget Sound Intrastate (remainder of):				
King County (remainder)		Unclassifiable/Attainment.		
Kitsap County		Unclassifiable/Attainment.		
Snohomish County (remainder)		Unclassifiable/Attainment.		
AQCR 230 South Central Washington Intrastate:				
Benton County		Unclassifiable/Attainment.		
Franklin County		Unclassifiable/Attainment.		
Kittitas County		Unclassifiable/Attainment.		
Klickitat County		Unclassifiable/Attainment.		
Walla Walla County		Unclassifiable/Attainment.		
Yakima County		Unclassifiable/Attainment.		
Seattle-Tacoma Area:				
Pierce County		Unclassifiable/Attainment.		

[a] Includes Indian Country located in each county or area, except as otherwise specified.
[1] This date is 90 days after January 5, 2005, unless otherwise noted.

WASHINGTON—1997 24-HOUR $PM_{2.5}$ NAAQS

[Primary and secondary]

Designated area	Designation [a]		Classification	
	Date [1]	Type	Date	Type
Tacoma, WA:				
Pierce County (part)		Unclassifiable/Attainment		

WASHINGTON—1997 24-HOUR $PM_{2.5}$ NAAQS—Continued

[Primary and secondary]

Designated area	Designation [a]		Classification	
	Date [1]	Type	Date	Type
Starting from where an extension of Kennedy Road Northeast would intersect Commencement Bay, proceed north to the intersection of Marine View Drive (State Route 509) and Kennedy Road Northeast. Proceed south on Marine View Drive to Hylebos Creek. Proceed south along Hylebos Creek to 12th Street East. Proceed east on 12th Street East to 70th Avenue East. Proceed south on 70th Avenue East to State Route 99 (S.R. 99). Proceed north on S.R. 99 0.1 mile north of Birch Street to a driveway to the east. Proceed east along the driveway and continue east along the same alignment to the Pierce County Line/Comprehensive Urban Growth Area (CUGA) boundary. Proceed east along the Pierce County Line/CUGA boundary to the eastern boundary of Edgewood. Proceed south along the eastern boundary of Edgewood to eastern boundary of the Sumner Urban Service Area. Proceed south along eastern boundary of the Sumner Urban Service Area to the eastern boundary of the Puyallup Urban Service Area. Proceed south along the eastern boundary of the Puyallup Urban Service Area to the eastern boundary of Puyallup/CUGA boundary. Proceed south and then west along the CUGA boundary to the eastern boundary of McChord Air Force Base. Proceed north along the eastern boundary of McChord Air Force Base to the northernmost point on the eastern boundary. Proceed from the northernmost point on the eastern boundary of McChord Air Force Base to the south right-of-way of S.R. 512. Proceed west along the south right-of-way of S.R. 512 to the south right-of-way of I–5. Proceed south along the south right-of-way to I–5 to the point opposite the boundary between Lakewood and Camp Murray. Proceed north across I–5 to the boundary between Lakewood and Camp Murray. Proceed north along the western boundary of Lakewood to the point where the western boundary coincides with the CUGA boundary. Proceed north along the CUGA boundary to the southern boundary of Point Defiance Park. Proceed east along the southern boundary of Point Defiance Park to Commencement Bay/CUGA boundary. Proceed southeast, then northeast, and finally northwest along the CUGA boundary to the starting point.				
Rest of State:				
Adams County		Unclassifiable/Attainment		
Asotin County		Unclassifiable/Attainment		
Benton County		Unclassifiable/Attainment		
Clark County		Unclassifiable/Attainment		
Clallam County		Unclassifiable/Attainment		
Columbia County		Unclassifiable/Attainment		
Cowlitz County		Unclassifiable/Attainment		
Douglas County		Unclassifiable/Attainment		
Ferry County		Unclassifiable/Attainment		
Franklin County		Unclassifiable/Attainment		
Garfield County		Unclassifiable/Attainment		
Grant County		Unclassifiable/Attainment		
Grays Harbor County		Unclassifiable/Attainment		
Island County		Unclassifiable/Attainment		
Jefferson County		Unclassifiable/Attainment		
King County		Unclassifiable/Attainment		
Kitsap County		Unclassifiable/Attainment		
Kittitas County		Unclassifiable/Attainment		
Klickitat County		Unclassifiable/Attainment		
Lincoln County		Unclassifiable/Attainment		

WASHINGTON—1997 24-HOUR $PM_{2.5}$ NAAQS—Continued

[Primary and secondary]

Designated area	Designation [a]		Classification	
	Date [1]	Type	Date	Type
Mason County		Unclassifiable/Attainment		
Okanogan County		Unclassifiable/Attainment		
Pacific County		Unclassifiable/Attainment		
Pend Oreille County		Unclassifiable/Attainment		
Pierce County (remainder)		Unclassifiable/Attainment		
San Juan County		Unclassifiable/Attainment		
Skagit County		Unclassifiable/Attainment		
Skamania County		Unclassifiable/Attainment		
Snohomish County		Unclassifiable/Attainment		
Spokane County		Unclassifiable/Attainment		
Stevens County		Unclassifiable/Attainment		
Thurston County		Unclassifiable/Attainment		
Wahkiakum County		Unclassifiable/Attainment		
Walla Walla County		Unclassifiable/Attainment		
Whatcom County		Unclassifiable/Attainment		
Whitman County		Unclassifiable/Attainment		
Yakima County		Unclassifiable/Attainment		

[a] Includes Indian Country located in each county or area, except as otherwise specified.
[1] This date is 90 days after January 5, 2005, unless otherwise noted.

WASHINGTON—2006 24-HOUR $PM_{2.5}$ NAAQS

[Primary and secondary]

Designated area	Designation [a]		Classification	
	Date [1]	Type	Date [2]	Type
Tacoma, WA:				
Pierce County (part)		Nonattainment		Moderate.

WASHINGTON—2006 24-HOUR $PM_{2.5}$ NAAQS—Continued

[Primary and secondary]

Designated area	Designation [a]		Classification	
	Date [1]	Type	Date [2]	Type
Starting from where an extension of Kennedy Road Northeast would intersect Commencement Bay, proceed north to the intersection of Marine View Drive (State Route 509) and Kennedy Road Northeast. Proceed south on Marine View Drive to Hylebos Creek. Proceed south along Hylebos Creek to 12th Street East. Proceed east on 12th Street East to 70th Avenue East. Proceed south on 70th Avenue East to State Route 99 (S.R. 99). Proceed north on S.R. 99 0.1 mile north of Birch Street to a driveway to the east. Proceed east along the driveway and continue east along the same alignment to the Pierce County Line/Comprehensive Urban Growth Area (CUGA) boundary. Proceed east along the Pierce County Line/CUGA boundary to the eastern boundary of Edgewood. Proceed south along the eastern boundary of Edgewood to eastern boundary of the Sumner Urban Service Area. Proceed south along eastern boundary of the Sumner Urban Service Area to the eastern boundary of the Puyallup Urban Service Area. Proceed south along the eastern boundary of the Puyallup Urban Service Area to the eastern boundary of Puyallup/CUGA boundary. Proceed south and then west along the CUGA boundary to the eastern boundary of McChord Air Force Base. Proceed north along the eastern boundary of McChord Air Force Base to the northernmost point on the eastern boundary. Proceed from the northernmost point on the eastern boundary of McChord Air Force Base to the south right-of-way of S.R. 512. Proceed west along the south right-of-way of S.R. 512 to the south right-of-way of I–5. Proceed south along the south right-of-way to I–5 to the point opposite the boundary between Lakewood and Camp Murray. Proceed north across I–5 to the boundary between Lakewood and Camp Murray. Proceed north along the western boundary of Lakewood to the point where the western boundary coincides with the CUGA boundary. Proceed north along the CUGA boundary to the southern boundary of Point Defiance Park. Proceed east along the southern boundary of Point Defiance Park to Commencement Bay/CUGA boundary. Proceed southeast, then northeast, and finally northwest along the CUGA boundary to the starting point.				
Rest of State:				
Adams County		Unclassifiable/Attainment.		
Asotin County		Unclassifiable/Attainment		
Benton County		Unclassifiable/Attainment		
Clark County		Unclassifiable/Attainment		
Clallam County		Unclassifiable/Attainment		
Columbia County		Unclassifiable/Attainment.		
Cowlitz County		Unclassifiable/Attainment		
Douglas County		Unclassifiable/Attainment		
Ferry County		Unclassifiable/Attainment		
Franklin County		Unclassifiable/Attainment		
Garfield County		Unclassifiable/Attainment		
Grant County		Unclassifiable/Attainment		
Grays Harbor County		Unclassifiable/Attainment		
Island County		Unclassifiable/Attainment		
Jefferson County		Unclassifiable/Attainment		
King County		Unclassifiable/Attainment		
Kitsap County		Unclassifiable/Attainment		
Kittitas County		Unclassifiable/Attainment		
Klickitat County		Unclassifiable/Attainment		
Lincoln County		Unclassifiable/Attainment		

WASHINGTON—2006 24-HOUR $PM_{2.5}$ NAAQS—Continued

[Primary and secondary]

Designated area	Designation [a]		Classification	
	Date [1]	Type	Date [2]	Type
Mason County		Unclassifiable/Attainment		
Okanogan County		Unclassifiable/Attainment		
Pacific County		Unclassifiable/Attainment		
Pend Oreille County		Unclassifiable/Attainment		
Pierce County (remainder)		Unclassifiable/Attainment		
San Juan County		Unclassifiable/Attainment		
Skagit County		Unclassifiable/Attainment		
Skamania County		Unclassifiable/Attainment		
Snohomish County		Unclassifiable/Attainment		
Spokane County		Unclassifiable/Attainment		
Stevens County		Unclassifiable/Attainment		
Thurston County		Unclassifiable/Attainment		
Wahkiakum County		Unclassifiable/Attainment		
Walla Walla County		Unclassifiable/Attainment		
Whatcom County		Unclassifiable/Attainment		
Whitman County		Unclassifiable/Attainment		
Yakima County		Unclassifiable/Attainment		

[a]Includes Indian Country located in each county or area, except as otherwise specified.

[1]This date is 30 days after November 13, 2009, unless otherwise noted.

[2]This date is July 2, 2034, unless otherwise noted.

* * * * *

50. Section 81.349 is amended as follows:

■ a. By removing the tables titled ''West Virginia—$PM_{2.5}$ (Annual NAAQS)'' and ''West Virginia—$PM_{2.5}$ [24-hour NAAQS]''.

■ b. By adding three tables titled ''West Virginia—1997 Annual $PM_{2.5}$ NAAQS (Primary and Secondary)'' and ''West Virginia—1997 24-hour $PM_{2.5}$ NAAQS (Primary and Secondary)'' and ''West Virginia—2006 24-hour $PM_{2.5}$ NAAQS (Primary and Secondary)'' before the table titled ''West Virginia—NO_2 (1971 Annual Standard)''.

The additions read as follows:

§ 81.349 West Virginia.

* * * * *

WEST VIRGINIA—1997 ANNUAL $PM_{2.5}$ NAAQS

[Primary and secondary]

Designated area	Designation[a]		Classification	
	Date[1]	Type	Date[2]	Type
Charleston, WV:				
Kanawha County		NonAttainment.		Moderate.
Putnam County		NonAttainment.		Moderate.
Huntington-Ashland, WV–KY–OH:				
Cabell County	12/28/12	Attainment.		
Mason County (part)	12/28/12	Attainment.		
Graham Tax District				
Wayne County	12/28/12	Attainment.		
Marion County, WV (aka Fairmont CBSA):				
Harrison County (part)				
Tax District of Clay		Unclassifiable/Attainment.		
Marion County		Unclassifiable/Attainment.		
Monongalia County (part)				
Tax District of Cass		Unclassifiable/Attainment.		
Martinsburg, WV-Hagerstown, MD:				
Berkeley County		NonAttainment.		Moderate.
Parkersburg-Marietta, WV–OH:				
Pleasants County (part)	9/12/13	Attainment.		
Tax District of Grant				
Wood County	9/12/13	Attainment.		
Steubenville-Weirton, OH–WV:				
Brooke County		NonAttainment.		Moderate.
Hancock County		NonAttainment.		Moderate.
Wheeling, WV–OH:				
Marshall County	9/30/13	Attainment.		
Ohio County	9/30/13	Attainment.		
Rest of State:				
Barbour County		Unclassifiable/Attainment.		
Boone County		Unclassifiable/Attainment.		
Braxton County		Unclassifiable/Attainment.		

WEST VIRGINIA—1997 ANNUAL $PM_{2.5}$ NAAQS—Continued

[Primary and secondary]

Designated area	Designation[a]		Classification	
	Date[1]	Type	Date[2]	Type
Calhoun County		Unclassifiable/Attainment.		
Clay County		Unclassifiable/Attainment.		
Doddridge County		Unclassifiable/Attainment.		
Fayette County		Unclassifiable/Attainment.		
Gilmer County		Unclassifiable/Attainment.		
Grant County		Unclassifiable/Attainment.		
Greenbrier County		Unclassifiable/Attainment.		
Hampshire County		Unclassifiable/Attainment.		
Hardy County		Unclassifiable/Attainment.		
Harrison County (remainder)		Unclassifiable/Attainment.		
Jackson County		Unclassifiable/Attainment.		
Jefferson County		Unclassifiable/Attainment.		
Lewis County		Unclassifiable/Attainment.		
Lincoln County		Unclassifiable/Attainment.		
Logan County		Unclassifiable/Attainment.		
McDowell County		Unclassifiable/Attainment.		
Mason County (remainder)		Unclassifiable/Attainment.		
Mercer County		Unclassifiable/Attainment.		
Mineral County		Unclassifiable/Attainment.		
Mingo County		Unclassifiable/Attainment.		
Monongalia County (remainder)		Unclassifiable/Attainment.		
Monroe County		Unclassifiable/Attainment.		
Morgan County		Unclassifiable/Attainment.		
Nicholas County		Unclassifiable/Attainment.		
Pendleton County		Unclassifiable/Attainment.		
Pleasants County (remainder)		Unclassifiable/Attainment.		
Pocahontas County		Unclassifiable/Attainment.		
Preston County		Unclassifiable/Attainment.		
Raleigh County		Unclassifiable/Attainment.		
Randolph County		Unclassifiable/Attainment.		
Ritchie County		Unclassifiable/Attainment.		
Roane County		Unclassifiable/Attainment.		
Summers County		Unclassifiable/Attainment.		
Taylor County		Unclassifiable/Attainment.		
Tucker County		Unclassifiable/Attainment.		
Tyler County		Unclassifiable/Attainment.		
Upshur County		Unclassifiable/Attainment.		
Webster County		Unclassifiable/Attainment.		
Wetzel County		Unclassifiable/Attainment.		
Wirt County		Unclassifiable/Attainment.		
Wyoming County		Unclassifiable/Attainment.		

[a]Includes Indian Country located in each county or area, except as otherwise specified.
[1]This date is 90 days after January 5, 2005, unless otherwise noted.
[2]This date is July 2, 2034, unless otherwise noted.

WEST VIRGINIA—1997 24-HOUR $PM_{2.5}$ NAAQS

(Primary and Secondary)

Designated area	Designation[a]		Classification	
	Date[1]	Type	Date	Type
Charleston, WV:				
Kanawha County		Unclassifiable/Attainment.		
Putnam County		Unclassifiable/Attainment.		
Steubenville-Weirton, OH–WV:				
Brooke County		Unclassifiable/Attainment.		
Hancock County		Unclassifiable/Attainment.		
Rest of State:				
Barbour County		Unclassifiable/Attainment.		
Berkley County		Unclassifiable/Attainment.		
Boone County		Unclassifiable/Attainment.		
Braxton County		Unclassifiable/Attainment.		
Cabell County		Unclassifiable/Attainment.		
Calhoun County		Unclassifiable/Attainment.		
Clay County		Unclassifiable/Attainment.		
Doddridge County		Unclassifiable/Attainment.		
Fayette County		Unclassifiable/Attainment.		

WEST VIRGINIA—1997 24-HOUR $PM_{2.5}$ NAAQS—Continued

(Primary and Secondary)

Designated area	Designation[a]		Classification	
	Date[1]	Type	Date	Type
Gilmer County		Unclassifiable/Attainment.		
Grant County		Unclassifiable/Attainment.		
Greenbrier County		Unclassifiable/Attainment.		
Hampshire County		Unclassifiable/Attainment.		
Hardy County		Unclassifiable/Attainment.		
Harrison County		Unclassifiable/Attainment.		
Jackson County		Unclassifiable/Attainment.		
Jefferson County		Unclassifiable/Attainment.		
Lewis County		Unclassifiable/Attainment.		
Lincoln County		Unclassifiable/Attainment.		
Logan County		Unclassifiable/Attainment.		
McDowell County		Unclassifiable/Attainment.		
Mason County		Unclassifiable/Attainment.		
Marion County		Unclassifiable/Attainment.		
Marshall County		Unclassifiable/Attainment.		
Mercer County		Unclassifiable/Attainment.		
Mineral County		Unclassifiable/Attainment.		
Mingo County		Unclassifiable/Attainment.		
Monongalia County		Unclassifiable/Attainment.		
Monroe County		Unclassifiable/Attainment.		
Morgan County		Unclassifiable/Attainment.		
Nicholas County		Unclassifiable/Attainment.		
Ohio County		Unclassifiable/Attainment.		
Pendleton County		Unclassifiable/Attainment.		
Pleasants County		Unclassifiable/Attainment.		
Pocahontas County		Unclassifiable/Attainment.		
Preston County		Unclassifiable/Attainment.		
Raleigh County		Unclassifiable/Attainment.		
Randolph County		Unclassifiable/Attainment.		
Ritchie County		Unclassifiable/Attainment.		
Roane County		Unclassifiable/Attainment.		
Summers County		Unclassifiable/Attainment.		
Taylor County		Unclassifiable/Attainment.		
Tucker County		Unclassifiable/Attainment.		
Tyler County		Unclassifiable/Attainment.		
Upshur County		Unclassifiable/Attainment.		
Wayne County		Unclassifiable/Attainment.		
Webster County		Unclassifiable/Attainment.		
Wetzel County		Unclassifiable/Attainment.		
Wirt County		Unclassifiable/Attainment.		
Wood County		Unclassifiable/Attainment.		
Wyoming County		Unclassifiable/Attainment.		

[a] Includes Indian Country located in each county or area, except as otherwise specified.
[1] This date is 90 days after January 5, 2005, unless otherwise noted.

WEST VIRGINIA—2006 24-HOUR $PM_{2.5}$ NAAQS

[Primary and secondary]

Designated area	Designation[a]		Classification	
	Date[1]	Type	Date[2]	Type
Charleston, WV:				
Kanawha County		Nonattainment		Moderate.
Putnam County		Nonattainment		Moderate.
Steubenville-Weirton, OH–WV:				
Brooke County		Nonattainment		Moderate.
Hancock County		Nonattainment		Moderate.
Rest of State:				
Barbour County		Unclassifiable/Attainment.		
Berkley County		Unclassifiable/Attainment.		
Boone County		Unclassifiable/Attainment.		
Braxton County		Unclassifiable/Attainment.		
Cabell County		Unclassifiable/Attainment.		
Calhoun County		Unclassifiable/Attainment.		
Clay County		Unclassifiable/Attainment.		
Doddridge County		Unclassifiable/Attainment.		
Fayette County		Unclassifiable/Attainment.		

WEST VIRGINIA—2006 24-HOUR $PM_{2.5}$ NAAQS—Continued

[Primary and secondary]

Designated area	Designation [a]		Classification	
	Date [1]	Type	Date [2]	Type
Gilmer County		Unclassifiable/Attainment.		
Grant County		Unclassifiable/Attainment.		
Greenbrier County		Unclassifiable/Attainment.		
Hampshire County		Unclassifiable/Attainment.		
Hardy County		Unclassifiable/Attainment.		
Harrison County		Unclassifiable/Attainment.		
Jackson County		Unclassifiable/Attainment.		
Jefferson County		Unclassifiable/Attainment.		
Lewis County		Unclassifiable/Attainment.		
Lincoln County		Unclassifiable/Attainment.		
Logan County		Unclassifiable/Attainment.		
McDowell County		Unclassifiable/Attainment.		
Mason County		Unclassifiable/Attainment.		
Marion County		Unclassifiable/Attainment.		
Marshall County		Unclassifiable/Attainment.		
Mercer County		Unclassifiable/Attainment.		
Mineral County		Unclassifiable/Attainment.		
Mingo County		Unclassifiable/Attainment.		
Monongalia County		Unclassifiable/Attainment.		
Monroe County		Unclassifiable/Attainment.		
Morgan County		Unclassifiable/Attainment.		
Nicholas County		Unclassifiable/Attainment.		
Ohio County		Unclassifiable/Attainment.		
Pendleton County		Unclassifiable/Attainment.		
Pleasants County		Unclassifiable/Attainment.		
Pocahontas County		Unclassifiable/Attainment.		
Preston County		Unclassifiable/Attainment.		
Raleigh County		Unclassifiable/Attainment.		
Randolph County		Unclassifiable/Attainment.		
Ritchie County		Unclassifiable/Attainment.		
Roane County		Unclassifiable/Attainment.		
Summers County		Unclassifiable/Attainment.		
Taylor County		Unclassifiable/Attainment.		
Tucker County		Unclassifiable/Attainment.		
Tyler County		Unclassifiable/Attainment.		
Upshur County		Unclassifiable/Attainment.		
Wayne County		Unclassifiable/Attainment.		
Webster County		Unclassifiable/Attainment.		
Wetzel County		Unclassifiable/Attainment.		
Wirt County		Unclassifiable/Attainment.		
Wood County		Unclassifiable/Attainment.		
Wyoming County		Unclassifiable/Attainment.		

[a] Includes Indian Country located in each county or area, except as otherwise specified.
[1] This date is 30 days after November 13, 2009, unless otherwise noted.
[2] This date is July 2, 2014, unless otherwise noted.

* * * * *

■ 51. Section 81.350 is amended as follows:

■ a. By removing the tables titled ''Wisconsin—$PM_{2.5}$ (Annual NAAQS)'' and ''Wisconsin—$PM_{2.5}$ [24-hour NAAQS]''.

■ b. By adding three tables titled ''Wisconsin—1997 Annual $PM_{2.5}$ NAAQS (Primary and Secondary)'' and ''Wisconsin—1997 24-hour $PM_{2.5}$ NAAQS (Primary and Secondary)'' and ''Wisconsin—2006 24-hour $PM_{2.5}$ NAAQS (Primary and Secondary)'' before the table titled ''Wisconsin—NO_2 (1971 Annual Standard)''.

The additions read as follows:

§ 81.350 Wisconsin.

* * * * *

WISCONSIN—1997 ANNUAL $PM_{2.5}$ NAAQS

[Primary and secondary]

Designated area	Designation [a]		Classification	
	Date [1]	Type	Date [2]	Type
Statewide:				
Adams County		Unclassifiable/Attainment.		
Ashland County		Unclassifiable/Attainment.		
Barron County		Unclassifiable/Attainment.		
Bayfield County		Unclassifiable/Attainment.		

WISCONSIN—1997 ANNUAL $PM_{2.5}$ NAAQS—Continued

[Primary and secondary]

Designated area	Designation [a]		Classification	
	Date [1]	Type	Date [2]	Type
Brown County		Unclassifiable/Attainment.		
Buffalo County		Unclassifiable/Attainment.		
Burnett County		Unclassifiable/Attainment.		
Calumet County		Unclassifiable/Attainment.		
Chippewa County		Unclassifiable/Attainment.		
Clark County		Unclassifiable/Attainment.		
Columbia County		Unclassifiable/Attainment.		
Crawford County		Unclassifiable/Attainment.		
Dane County		Unclassifiable/Attainment.		
Dodge County		Unclassifiable/Attainment.		
Door County		Unclassifiable/Attainment.		
Douglas County		Unclassifiable/Attainment.		
Dunn County		Unclassifiable/Attainment.		
Eau Claire County		Unclassifiable/Attainment.		
Florence County		Unclassifiable/Attainment.		
Fond du Lac County		Unclassifiable/Attainment.		
Forest County		Unclassifiable/Attainment.		
Grant County		Unclassifiable/Attainment.		
Green County		Unclassifiable/Attainment.		
Green Lake County		Unclassifiable/Attainment.		
Iowa County		Unclassifiable/Attainment.		
Iron County		Unclassifiable/Attainment.		
Jackson County		Unclassifiable/Attainment.		
Jefferson County		Unclassifiable/Attainment.		
Juneau County		Unclassifiable/Attainment.		
Kenosha County		Unclassifiable/Attainment.		
Kewaunee County		Unclassifiable/Attainment.		
La Crosse County		Unclassifiable/Attainment.		
Lafayette County		Unclassifiable/Attainment.		
Langlade County		Unclassifiable/Attainment.		
Lincoln County		Unclassifiable/Attainment.		
Manitowoc County		Unclassifiable/Attainment.		
Marathon County		Unclassifiable/Attainment.		
Marinette County		Unclassifiable/Attainment.		
Marquette County		Unclassifiable/Attainment.		
Menominee County		Unclassifiable/Attainment.		
Milwaukee County		Unclassifiable/Attainment.		
Monroe County		Unclassifiable/Attainment.		
Oconto County		Unclassifiable/Attainment.		
Oneida County		Unclassifiable/Attainment.		
Outagamie County		Unclassifiable/Attainment.		
Ozaukee County		Unclassifiable/Attainment.		
Pepin County		Unclassifiable/Attainment.		
Pierce County		Unclassifiable/Attainment.		
Polk County		Unclassifiable/Attainment.		
Portage County		Unclassifiable/Attainment.		
Price County		Unclassifiable/Attainment.		
Racine County		Unclassifiable/Attainment.		
Richland County		Unclassifiable/Attainment.		
Rock County		Unclassifiable/Attainment.		
Rusk County		Unclassifiable/Attainment.		
St. Croix County		Unclassifiable/Attainment.		
Sauk County		Unclassifiable/Attainment.		
Sawyer County		Unclassifiable/Attainment.		
Shawano County		Unclassifiable/Attainment.		
Sheboygan County		Unclassifiable/Attainment.		
Taylor County		Unclassifiable/Attainment.		
Trempealeau County		Unclassifiable/Attainment.		
Vernon County		Unclassifiable/Attainment.		
Vilas County		Unclassifiable/Attainment.		
Walworth County		Unclassifiable/Attainment.		
Washburn County		Unclassifiable/Attainment.		
Washington County		Unclassifiable/Attainment.		
Waukesha County		Unclassifiable/Attainment.		
Waupaca County		Unclassifiable/Attainment.		
Waushara County		Unclassifiable/Attainment.		
Winnebago County		Unclassifiable/Attainment.		
Wood County		Unclassifiable/Attainment.		

[a] Includes Indian Country located in each county or area, except as otherwise specified.

[1] This date is 90 days after January 5, 2005, unless otherwise noted.

WISCONSIN—1997 24-HOUR $PM_{2.5}$ NAAQS

[Primary and secondary]

Designated area	Designation [a]		Classification	
	Date [1]	Type	Date [2]	Type
Milwaukee-Racine, WI:				
Milwaukee County		Unclassifiable/Attainment.		
Racine County		Unclassifiable/Attainment.		
Waukesha County		Unclassifiable/Attainment.		
Rest of State:				
Adams County		Unclassifiable/Attainment.		
Ashland County		Unclassifiable/Attainment.		
Barron County		Unclassifiable/Attainment.		
Bayfield County		Unclassifiable/Attainment.		
Brown County		Unclassifiable/Attainment.		
Buffalo County		Unclassifiable/Attainment.		
Burnett County		Unclassifiable/Attainment.		
Calumet County		Unclassifiable/Attainment.		
Chippewa County		Unclassifiable/Attainment.		
Clark County		Unclassifiable/Attainment.		
Columbia County		Unclassifiable/Attainment.		
Crawford County		Unclassifiable/Attainment.		
Dane County		Unclassifiable/Attainment.		
Dodge County		Unclassifiable/Attainment.		
Door County		Unclassifiable/Attainment.		
Douglas County		Unclassifiable/Attainment.		
Dunn County		Unclassifiable/Attainment.		
Eau Claire County		Unclassifiable/Attainment.		
Florence County		Unclassifiable/Attainment.		
Fond du Lac County		Unclassifiable/Attainment.		
Forest County		Unclassifiable/Attainment.		
Grant County		Unclassifiable/Attainment.		
Green County		Unclassifiable/Attainment.		
Green Lake County		Unclassifiable/Attainment.		
Iowa County		Unclassifiable/Attainment.		
Iron County		Unclassifiable/Attainment.		
Jackson County		Unclassifiable/Attainment.		
Jefferson County		Unclassifiable/Attainment.		
Juneau County		Unclassifiable/Attainment.		
Kenosha County		Unclassifiable/Attainment.		
Kewaunee County		Unclassifiable/Attainment.		
La Crosse County		Unclassifiable/Attainment.		
Lafayette County		Unclassifiable/Attainment.		
Langlade County		Unclassifiable/Attainment.		
Lincoln County		Unclassifiable/Attainment.		
Manitowoc County		Unclassifiable/Attainment.		
Marathon County		Unclassifiable/Attainment.		
Marinette County		Unclassifiable/Attainment.		
Marquette County		Unclassifiable/Attainment.		
Menominee County		Unclassifiable/Attainment.		
Monroe County		Unclassifiable/Attainment.		
Oconto County		Unclassifiable/Attainment.		
Oneida County		Unclassifiable/Attainment.		
Outagamie County		Unclassifiable/Attainment.		
Ozaukee County		Unclassifiable/Attainment.		
Pepin County		Unclassifiable/Attainment.		
Pierce County		Unclassifiable/Attainment.		
Polk County		Unclassifiable/Attainment.		
Portage County		Unclassifiable/Attainment.		
Price County		Unclassifiable/Attainment.		
Richland County		Unclassifiable/Attainment.		
Rock County		Unclassifiable/Attainment.		
Rusk County		Unclassifiable/Attainment.		
St. Croix County		Unclassifiable/Attainment.		
Sauk County		Unclassifiable/Attainment.		
Sawyer County		Unclassifiable/Attainment.		
Shawano County		Unclassifiable/Attainment.		
Sheboygan County		Unclassifiable/Attainment.		
Taylor County		Unclassifiable/Attainment.		
Trempealeau County		Unclassifiable/Attainment.		
Vernon County		Unclassifiable/Attainment.		
Vilas County		Unclassifiable/Attainment.		

WISCONSIN—1997 24-HOUR $PM_{2.5}$ NAAQS—Continued

[Primary and secondary]

Designated area	Designation [a]		Classification	
	Date [1]	Type	Date [2]	Type
Walworth County		Unclassifiable/Attainment.		
Washburn County		Unclassifiable/Attainment.		
Washington County		Unclassifiable/Attainment.		
Waupaca County		Unclassifiable/Attainment.		
Waushara County		Unclassifiable/Attainment.		
Winnebago County		Unclassifiable/Attainment.		
Wood County		Unclassifiable/Attainment.		

[a] Includes Indian Country located in each county or area, except as otherwise specified.
[1] This date is 90 days after January 5, 2005, unless otherwise noted.

WISCONSIN—2006 24-HOUR $PM_{2.5}$ NAAQS

[Primary and secondary]

Designated area	Designation [a]		Classification	
	Date [1]	Type	Date [2]	Type
Milwaukee-Racine, WI:				
Milwaukee County		Nonattainment.		Moderate.
Racine County		Nonattainment.		Moderate.
Waukesha County		Nonattainment.		Moderate.
Rest of State:				
Adams County		Unclassifiable/Attainment.		
Ashland County		Unclassifiable/Attainment.		
Barron County		Unclassifiable/Attainment.		
Bayfield County		Unclassifiable/Attainment.		
Brown County		Unclassifiable/Attainment.		
Buffalo County		Unclassifiable/Attainment.		
Burnett County		Unclassifiable/Attainment.		
Calumet County		Unclassifiable/Attainment.		
Chippewa County		Unclassifiable/Attainment.		
Clark County		Unclassifiable/Attainment.		
Columbia County		Unclassifiable/Attainment.		
Crawford County		Unclassifiable/Attainment.		
Dane County		Unclassifiable/Attainment.		
Dodge County		Unclassifiable/Attainment.		
Door County		Unclassifiable/Attainment.		
Douglas County		Unclassifiable/Attainment.		
Dunn County		Unclassifiable/Attainment.		
Eau Claire County		Unclassifiable/Attainment.		
Florence County		Unclassifiable/Attainment.		
Fond du Lac County		Unclassifiable/Attainment.		
Forest County		Unclassifiable/Attainment.		
Grant County		Unclassifiable/Attainment.		
Green County		Unclassifiable/Attainment.		
Green Lake County		Unclassifiable/Attainment.		
Iowa County		Unclassifiable/Attainment.		
Iron County		Unclassifiable/Attainment.		
Jackson County		Unclassifiable/Attainment.		
Jefferson County		Unclassifiable/Attainment.		
Juneau County		Unclassifiable/Attainment.		
Kenosha County		Unclassifiable/Attainment.		
Kewaunee County		Unclassifiable/Attainment.		
La Crosse County		Unclassifiable/Attainment.		
Lafayette County		Unclassifiable/Attainment.		
Langlade County		Unclassifiable/Attainment.		
Lincoln County		Unclassifiable/Attainment.		
Manitowoc County		Unclassifiable/Attainment.		
Marathon County		Unclassifiable/Attainment.		
Marinette County		Unclassifiable/Attainment.		
Marquette County		Unclassifiable/Attainment.		
Menominee County		Unclassifiable/Attainment.		
Monroe County		Unclassifiable/Attainment.		
Oconto County		Unclassifiable/Attainment.		
Oneida County		Unclassifiable/Attainment.		
Outagamie County		Unclassifiable/Attainment.		
Ozaukee County		Unclassifiable/Attainment.		
Pepin County		Unclassifiable/Attainment.		

WISCONSIN—2006 24-HOUR $PM_{2.5}$ NAAQS—Continued

[Primary and secondary]

Designated area	Designation [a]		Classification	
	Date [1]	Type	Date [2]	Type
Pierce County		Unclassifiable/Attainment..		
Polk County		Unclassifiable/Attainment..		
Portage County		Unclassifiable/Attainment..		
Price County		Unclassifiable/Attainment..		
Richland County		Unclassifiable/Attainment..		
Rock County		Unclassifiable/Attainment..		
Rusk County		Unclassifiable/Attainment..		
St. Croix County		Unclassifiable/Attainment..		
Sauk County		Unclassifiable/Attainment..		
Sawyer County		Unclassifiable/Attainment..		
Shawano County		Unclassifiable/Attainment..		
Sheboygan County		Unclassifiable/Attainment..		
Taylor County		Unclassifiable/Attainment..		
Trempealeau County		Unclassifiable/Attainment..		
Vernon County		Unclassifiable/Attainment..		
Vilas County		Unclassifiable/Attainment..		
Walworth County		Unclassifiable/Attainment..		
Washburn County		Unclassifiable/Attainment..		
Washington County		Unclassifiable/Attainment..		
Waupaca County		Unclassifiable/Attainment..		
Waushara County		Unclassifiable/Attainment..		
Winnebago County		Unclassifiable/Attainment..		
Wood County		Unclassifiable/Attainment..		

[a] Includes Indian Country located in each county or area, except as otherwise specified.
[1] This date is 30 days after November 13, 2009, unless otherwise noted.
[2] This date is July 2, 2014, unless otherwise noted.

* * * * *

■ 52. Section 81.351 is amended as follows:

■ a. By removing the tables titled ''Wyoming—$PM_{2.5}$ (Annual NAAQS)'' and ''Wyoming—$PM_{2.5}$ [24-hour NAAQS]''.

■ b. By adding three tables titled ''Wyoming—1997 Annual $PM_{2.5}$ NAAQS (Primary and Secondary)'' and ''Wyoming—1997 24-hour $PM_{2.5}$ NAAQS (Primary and Secondary)'' and ''Wyoming—2006 24-hour $PM_{2.5}$ NAAQS (Primary and Secondary)'' before the table titled ''Wyoming—NO_2 (1971 Annual Standard)''.

The additions read as follows:

§ 81.351 Wyoming.

* * * * *

WYOMING—1997 ANNUAL $PM_{2.5}$ NAAQS

[Primary and secondary]

Designated area	Designation [a]		Classification	
	Date [1]	Type	Date	Type
Casper, WY:				
Natrona County (part)		Unclassifiable/Attainment..		
The portion within the City of Casper.				
Cheyenne, WY:				
Laramie County (part)		Unclassifiable/Attainment..		
The portion within the City of Cheyenne.				
Evanston, WY:				
Uinta County (part)		Unclassifiable/Attainment..		
The portion within the City of Evanston.				
Gillette, WY:				
Campbell County (part)		Unclassifiable/Attainment..		
The portion within the City of Gillette.				
Jackson, WY:				
Teton County (part)		Unclassifiable/Attainment..		
The portion within the City of Jackson.				
Lander, WY:				
Fremont County (part)		Unclassifiable/Attainment..		
The portion within the City of Lander.				
Laramie, WY:				
Albany County (part)		Unclassifiable/Attainment..		
The portion within the City of Laramie.				
Riverton, WY:				
Fremont County (part)		Unclassifiable/Attainment..		
The portion within the City of Riverton.				

WYOMING—1997 ANNUAL $PM_{2.5}$ NAAQS—Continued

[Primary and secondary]

Designated area	Designation [a]		Classification	
	Date [1]	Type	Date	Type
Rock Springs, WY:				
Sweetwater County (part)		Unclassifiable/Attainment..		
The portion within the City of Rock Springs.				
Sheridan, WY:				
Sheridan County (part)		Unclassifiable/Attainment..		
The portion within the City of Sheridan.				
Rest of State:				
Albany County (remainder)		Unclassifiable/Attainment..		
Big Horn County		Unclassifiable/Attainment..		
Campbell County		Unclassifiable/Attainment..		
Carbon County		Unclassifiable/Attainment..		
Converse County		Unclassifiable/Attainment..		
Crook County		Unclassifiable/Attainment..		
Fremont County (remainder)		Unclassifiable/Attainment..		
Goshen County		Unclassifiable/Attainment..		
Hot Springs County		Unclassifiable/Attainment..		
Johnson County		Unclassifiable/Attainment..		
Laramie County (remainder)		Unclassifiable/Attainment..		
Lincoln County		Unclassifiable/Attainment..		
Natrona County (remainder)		Unclassifiable/Attainment..		
Niobrara County		Unclassifiable/Attainment..		
Park County		Unclassifiable/Attainment..		
Platte County		Unclassifiable/Attainment..		
Sheridan County (remainder)		Unclassifiable/Attainment..		
Sublette County		Unclassifiable/Attainment..		
Sweetwater County		Unclassifiable/Attainment..		
Teton County (remainder)		Unclassifiable/Attainment..		
Uinta County (remainder)		Unclassifiable/Attainment..		
Washakie County		Unclassifiable/Attainment..		
Weston County		Unclassifiable/Attainment..		

[a] Includes Indian Country located in each county or area, except as otherwise specified.
[1] This date is 90 days after January 5, 2005, unless otherwise noted.

WYOMING—1997 24-HOUR $PM_{2.5}$ NAAQS

[Primary and secondary]

Designated area	Designation [a]		Classification	
	Date [1]	Type	Date	Type
Casper, WY:				
Natrona County (part)		Unclassifiable/Attainment.		
The portion within the City of Casper.				
Cheyenne, WY:				
Laramie County (part)		Unclassifiable/Attainment.		
The portion within the City of Cheyenne.				
Evanston, WY:				
Uinta County (part)		Unclassifiable/Attainment.		
The portion within the City of Evanston.				
Gillette, WY:				
Campbell County (part)		Unclassifiable/Attainment.		
The portion within the City of Gillette.				
Jackson, WY:				
Teton County (part)		Unclassifiable/Attainment.		
The portion within the City of Jackson.				
Lander, WY:				
Fremont County (part)		Unclassifiable/Attainment.		
The portion within the City of Lander.				
Laramie, WY:				
Albany County (part)		Unclassifiable/Attainment.		
The portion within the City of Laramie.				
Riverton, WY:				
Fremont County (part)		Unclassifiable/Attainment.		
The portion within the City of Riverton.				
Rock Springs, WY:				
Sweetwater County (part)		Unclassifiable/Attainment.		
The portion within the City of Rock Springs.				
Sheridan, WY:				

WYOMING—1997 24-HOUR $PM_{2.5}$ NAAQS—Continued

[Primary and secondary]

Designated area	Designation [a]		Classification	
	Date [1]	Type	Date	Type
Sheridan County (part)		Unclassifiable/Attainment.		
The portion within the City of Sheridan.				
Rest of State:				
Albany County (remainder)		Unclassifiable/Attainment.		
Big Horn County		Unclassifiable/Attainment.		
Campbell County		Unclassifiable/Attainment.		
Carbon County		Unclassifiable/Attainment.		
Converse County		Unclassifiable/Attainment.		
Crook County		Unclassifiable/Attainment.		
Fremont County (remainder)		Unclassifiable/Attainment.		
Goshen County		Unclassifiable/Attainment.		
Hot Springs County		Unclassifiable/Attainment.		
Johnson County		Unclassifiable/Attainment.		
Laramie County (remainder)		Unclassifiable/Attainment.		
Lincoln County		Unclassifiable/Attainment.		
Natrona County (remainder)		Unclassifiable/Attainment.		
Niobrara County		Unclassifiable/Attainment.		
Park County		Unclassifiable/Attainment.		
Platte County		Unclassifiable/Attainment.		
Sheridan County (remainder)		Unclassifiable/Attainment.		
Sublette County		Unclassifiable/Attainment.		
Sweetwater County		Unclassifiable/Attainment.		
Teton County (remainder)		Unclassifiable/Attainment.		
Uinta County (remainder)		Unclassifiable/Attainment.		
Washakie County		Unclassifiable/Attainment.		
Weston County		Unclassifiable/Attainment.		

[a] Includes Indian Country located in each county or area, except as otherwise specified.
[1] This date is 90 days after January 5, 2005, unless otherwise noted.

WYOMING—2006 24-HOUR $PM_{2.5}$ NAAQS

[Primary and secondary]

Designated area	Designation [a]		Classification	
	Date [1]	Type	Date	Type
Casper, WY:				
Natrona County (part)		Unclassifiable/Attainment.		
The portion within the City of Casper.				
Cheyenne, WY:				
Laramie County (part)		Unclassifiable/Attainment.		
The portion within the City of Cheyenne..				
Evanston, WY:				
Uinta County (part)		Unclassifiable/Attainment.		
The portion within the City of Evanston.				
Gillette, WY:				
Campbell County (part)		Unclassifiable/Attainment.		
The portion within the City of Gillette.				
Jackson, WY:				
Teton County (part)		Unclassifiable/Attainment.		
The portion within the City of Jackson.				
Lander, WY:				
Fremont County (part)		Unclassifiable/Attainment.		
The portion within the City of Lander.				
Laramie, WY:				
Albany County (part)		Unclassifiable/Attainment.		
The portion within the City of Laramie.				
Riverton, WY:				
Fremont County (part)		Unclassifiable/Attainment.		
The portion within the City of Riverton.				
Rock Springs, WY:				
Sweetwater County (part)		Unclassifiable/Attainment.		
The portion within the City of Rock Springs.				
Sheridan, WY:				
Sheridan County (part)		Unclassifiable/Attainment.		
The portion within the City of Sheridan.				
Rest of State:				
Albany County (remainder)		Unclassifiable/Attainment.		

WYOMING—2006 24-HOUR $PM_{2.5}$ NAAQS—Continued

[Primary and secondary]

Designated area	Designation [a]		Classification	
	Date [1]	Type	Date	Type
Big Horn County		Unclassifiable/Attainment.		
Campbell County		Unclassifiable/Attainment.		
Carbon County		Unclassifiable/Attainment.		
Converse County		Unclassifiable/Attainment.		
Crook County		Unclassifiable/Attainment.		
Fremont County (remainder)		Unclassifiable/Attainment.		
Goshen County		Unclassifiable/Attainment.		
Hot Springs County		Unclassifiable/Attainment.		
Johnson County		Unclassifiable/Attainment.		
Laramie County (remainder)		Unclassifiable/Attainment.		
Lincoln County		Unclassifiable/Attainment.		
Natrona County (remainder)		Unclassifiable/Attainment.		
Niobrara County		Unclassifiable/Attainment.		
Park County		Unclassifiable/Attainment.		
Platte County		Unclassifiable/Attainment.		
Sheridan County (remainder)		Unclassifiable/Attainment.		
Sublette County		Unclassifiable/Attainment.		
Sweetwater County		Unclassifiable/Attainment.		
Teton County (remainder)		Unclassifiable/Attainment.		
Uinta County (remainder)		Unclassifiable/Attainment..		
Washakie County		Unclassifiable/Attainment.		
Weston County		Unclassifiable/Attainment.		

[a] Includes Indian Country located in each county or area, except as otherwise specified.
[1] This date is 30 days after November 13, 2009, unless otherwise noted.

* * * * *

■ 53. Section 81.352 is amended as follows:

■ a. By removing the tables titled ''American Samoa—$PM_{2.5}$ (Annual NAAQS)'' and ''American Samoa—$PM_{2.5}$ [24-hour NAAQS]''.

■ b. By adding three tables titled ''American Samoa—1997 Annual $PM_{2.5}$ NAAQS (Primary and Secondary)'' and ''American Samoa—1997 24-hour $PM_{2.5}$ NAAQS (Primary and Secondary)'' and ''American Samoa—2006 24-hour $PM_{2.5}$ NAAQS (Primary and Secondary)'' before the table titled ''American Samoa—NO_2 (1971 Annual Standard)''.

The additions read as follows:

§ 81.352 American Samoa.

* * * * *

AMERICAN SAMOA—1997 ANNUAL $PM_{2.5}$ NAAQS

[Primary and secondary]

Designated area	Designation [a]		Classification	
	Date [1]	Type	Date	Type
Territory wide:				
Eastern District		Unclassifiable/Attainment..		
Manu'a District		Unclassifiable/Attainment..		
Rose Island		Unclassifiable/Attainment..		
Swains Island		Unclassifiable/Attainment..		
Western District		Unclassifiable/Attainment..		

[a] Includes Indian Country located in each county or area, except as otherwise specified.
[1] This date is 90 days after January 5, 2005, unless otherwise noted.

AMERICAN SAMOA—1997 24-HOUR $PM_{2.5}$ NAAQS

[Primary and secondary]

Designated area	Designation [a]		Classification	
	Date [1]	Type	Date	Type
Territory wide:				
Eastern District		Unclassifiable/Attainment.		
Manu'a District		Unclassifiable/Attainment.		
Rose Island		Unclassifiable/Attainment.		
Swains Island		Unclassifiable/Attainment.		
Western District		Unclassifiable/Attainment.		

[a] Includes Indian Country located in each county or area, except as otherwise specified.
[1] This date is 90 days after January 5, 2005, unless otherwise noted.

AMERICAN SAMOA—2006 24-HOUR $PM_{2.5}$ NAAQS

[Primary and secondary]

Designated area	Designation [a]		Classification	
	Date [1]	Type	Date	Type
Territory wide:				
Eastern District		Unclassifiable/Attainment.		
Manu'a District		Unclassifiable/Attainment.		
Rose Island		Unclassifiable/Attainment.		
Swains Island		Unclassifiable/Attainment.		
Western District		Unclassifiable/Attainment.		

[a] Includes Indian Country located in each county or area, except as otherwise specified.
[1] This date is 30 days after November 13, 2009, unless otherwise noted.

* * * * *

■ 54. Section 81.353 is amended as follows:

■ a. By removing the tables titled ''Guam—$PM_{2.5}$ (Annual NAAQS)'' and ''Guam—$PM_{2.5}$ [24-hour NAAQS]''.

■ b. By adding three tables titled ''Guam—1997 Annual $PM_{2.5}$ NAAQS (Primary and Secondary)'' and ''Guam—1997 24-hour $PM_{2.5}$ NAAQS (Primary and Secondary)'' and ''Guam—2006 24-hour $PM_{2.5}$ NAAQS (Primary and Secondary)'' before the table titled ''Guam—NO_2 (1971 Annual Standard)''.

The additions read as follows:

§ 81.353 Guam.

* * * * *

GUAM—1997 ANNUAL $PM_{2.5}$ NAAQS

[Primary and secondary]

Designated area	Designation [a]		Classification	
	Date [1]	Type	Date	Type
Territory wide:				
Guam		Unclassifiable/Attainment.		

[a] Includes Indian Country located in each county or area, except as otherwise specified.
[1] This date is 90 days after January 5, 2005, unless otherwise noted.

GUAM—1997 24-HOUR $PM_{2.5}$ NAAQS

[Primary and secondary]

Designated area	Designation [a]		Classification	
	Date [1]	Type	Date	Type
Territory wide:				
Guam		Unclassifiable/Attainment.		

[a] Includes Indian Country located in each county or area, except as otherwise specified.
[1] This date is 90 days after January 5, 2005, unless otherwise noted.

GUAM—2006 24-HOUR $PM_{2.5}$ NAAQS

[Primary and secondary]

Designated area	Designation [a]		Classification	
	Date [1]	Type	Date	Type
Territory wide:				
Guam		Unclassifiable/Attainment.		

[a] Includes Indian Country located in each county or area, except as otherwise specified.
[1] This date is 30 days after November 13, 2009, unless otherwise noted.

* * * * *

■ 55. Section 81.354 is amended as follows:

■ a. By removing the tables titled ''Northern Mariana Islands—$PM_{2.5}$ (Annual NAAQS)'' and ''Northern Mariana Islands—$PM_{2.5}$ [24-hour NAAQS]''.

■ b. By adding three tables titled ''Northern Mariana Islands—1997 Annual $PM_{2.5}$ NAAQS (Primary and Secondary)'' and ''Northern Mariana Islands—1997 24-hour $PM_{2.5}$ NAAQS (Primary and Secondary)'' and ''Northern Mariana Islands—2006 24-hour $PM_{2.5}$ NAAQS (Primary and Secondary)'' before the table titled ''Northern Mariana Islands—NO_2 (1971 Annual Standard)''.

The additions read as follows:

§ 81.354 Northern Mariana Islands.

* * * * *

NORTHERN MARIANA ISLANDS—1997 ANNUAL $PM_{2.5}$ NAAQS

[Primary and secondary]

Designated area	Designation [a]		Classification	
	Date [1]	Type	Date	Type
Territory wide:				
Northern Islands Municipality		Unclassifiable/Attainment.		
Rota Municipality		Unclassifiable/Attainment.		
Saipan Municipality		Unclassifiable/Attainment.		
Tinian Municipality		Unclassifiable/Attainment.		

[a] Includes Indian Country located in each county or area, except as otherwise specified.
[1] This date is 90 days after January 5, 2005, unless otherwise noted.

NORTHERN MARIANA ISLANDS—1997 24-HOUR $PM_{2.5}$ NAAQS

[Primary and secondary]

Designated area	Designation [a]		Classification	
	Date [1]	Type	Date	Type
Territory wide:				
Northern Islands Municipality		Unclassifiable/Attainment.		
Rota Municipality		Unclassifiable/Attainment.		
Saipan Municipality		Unclassifiable/Attainment.		
Tinian Municipality		Unclassifiable/Attainment.		

[a] Includes Indian Country located in each county or area, except as otherwise specified.
[1] This date is 90 days after January 5, 2005, unless otherwise noted.

NORTHERN MARIANA ISLANDS—2006 24-HOUR $PM_{2.5}$ NAAQS

[Primary and secondary]

Designated area	Designation [a]		Classification	
	Date [1]	Type	Date	Type
Territory wide:				
Northern Islands Municipality		Unclassifiable/Attainment.		
Rota Municipality		Unclassifiable/Attainment.		
Saipan Municipality		Unclassifiable/Attainment.		
Tinian Municipality		Unclassifiable/Attainment.		

[a] Includes Indian Country located in each county or area, except as otherwise specified.
[1] This date is 30 days after November 13, 2009, unless otherwise noted.

* * * * *

■ 56. Section 81.355 is amended as follows:

■ a. By removing the tables titled ''Puerto Rico—$PM_{2.5}$ (Annual NAAQS)'' and ''Puerto Rico—$PM_{2.5}$ [24-hour NAAQS]''.

■ b. By adding three tables titled ''Puerto Rico—1997 Annual $PM_{2.5}$ NAAQS (Primary and Secondary)'' and ''Puerto Rico—1997 24-hour $PM_{2.5}$ NAAQS (Primary and Secondary)'' and ''Puerto Rico—2006 24-hour $PM_{2.5}$ NAAQS (Primary and Secondary)'' before the table titled ''Puerto Rico—NO_2 (1971 Annual Standard)''.

The additions read as follows:

§ 81.355 Puerto Rico.

* * * * *

PUERTO RICO—1997 ANNUAL $PM_{2.5}$ NAAQS

[Primary and secondary]

Designated area	Designation [a]		Classification	
	Date [1]	Type	Date	Type
Statewide:				
Adjuntas Municipio		Unclassifiable/Attainment.		
Aguada Municipio		Unclassifiable/Attainment..		
Aguadilla Municipio		Unclassifiable/Attainment..		
Aguas Buenas Municipio		Unclassifiable/Attainment..		
Aibonito Municipio		Unclassifiable/Attainment..		
Añasco Municipio		Unclassifiable/Attainment..		
Arecibo Municipio		Unclassifiable/Attainment..		
Arroyo Municipio		Unclassifiable/Attainment..		
Barceloneta Municipio		Unclassifiable/Attainment..		
Barranquitas Municipio		Unclassifiable/Attainment..		

PUERTO RICO—1997 ANNUAL $PM_{2.5}$ NAAQS—Continued

[Primary and secondary]

Designated area	Designation [a]		Classification	
	Date [1]	Type	Date	Type
Bayamón County		Unclassifiable/Attainment		
Cabo Rojo Municipio		Unclassifiable/Attainment		
Caguas Municipio		Unclassifiable/Attainment		
Camuy Municipio		Unclassifiable/Attainment		
Canóvanas Municipio		Unclassifiable/Attainment		
Carolina Municipio		Unclassifiable/Attainment		
Cataño County		Unclassifiable/Attainment		
Cayey Municipio		Unclassifiable/Attainment		
Ceiba Municipio		Unclassifiable/Attainment		
Ciales Municipio		Unclassifiable/Attainment		
Cidra Municipio		Unclassifiable/Attainment		
Coamo Municipio		Unclassifiable/Attainment		
Comerío Municipio		Unclassifiable/Attainment		
Corozal Municipio		Unclassifiable/Attainment		
Culebra Municipio		Unclassifiable/Attainment		
Dorado Municipio		Unclassifiable/Attainment		
Fajardo Municipio		Unclassifiable/Attainment		
Florida Municipio		Unclassifiable/Attainment		
Guánica Municipio		Unclassifiable/Attainment		
Guayama Municipio		Unclassifiable/Attainment		
Guayanilla Municipio		Unclassifiable/Attainment		
Guaynabo County		Unclassifiable/Attainment		
Gurabo Municipio		Unclassifiable/Attainment		
Hatillo Municipio		Unclassifiable/Attainment		
Hormigueros Municipio		Unclassifiable/Attainment		
Humacao Municipio		Unclassifiable/Attainment		
Isabela Municipio		Unclassifiable/Attainment		
Jayuya Municipio		Unclassifiable/Attainment		
Juana Díaz Municipio		Unclassifiable/Attainment		
Juncos Municipio		Unclassifiable/Attainment		
Lajas Municipio		Unclassifiable/Attainment		
Lares Municipio		Unclassifiable/Attainment		
Las Marías Municipio		Unclassifiable/Attainment		
Las Piedras Municipio		Unclassifiable/Attainment		
Loíza Municipio		Unclassifiable/Attainment		
Luquillo Municipio		Unclassifiable/Attainment		
Manatí Municipio		Unclassifiable/Attainment		
Maricao Municipio		Unclassifiable/Attainment		
Maunabo Municipio		Unclassifiable/Attainment		
Mayagnez Municipio		Unclassifiable/Attainment		
Moca Municipio		Unclassifiable/Attainment		
Morovis Municipio		Unclassifiable/Attainment		
Naguabo Municipio		Unclassifiable/Attainment		
Naranjito Municipio		Unclassifiable/Attainment		
Orocovis Municipio		Unclassifiable/Attainment		
Patillas Municipio		Unclassifiable/Attainment		
Peñuelas Municipio		Unclassifiable/Attainment		
Ponce Municipio		Unclassifiable/Attainment		
Quebradillas Municipio		Unclassifiable/Attainment		
Rincón Municipio		Unclassifiable/Attainment		
Río Grande Municipio		Unclassifiable/Attainment		
Sabana Grande Municipio		Unclassifiable/Attainment		
Salinas Municipio		Unclassifiable/Attainment		
San Germán Municipio		Unclassifiable/Attainment		
San Juan Municipio		Unclassifiable/Attainment		
San Lorenzo Municipio		Unclassifiable/Attainment		
San Sebastián Municipio		Unclassifiable/Attainment		
Santa Isabel Municipio		Unclassifiable/Attainment		
Toa Alta Municipio		Unclassifiable/Attainment		
Toa Baja Municipio		Unclassifiable/Attainment		
Trujillo Alto Municipio		Unclassifiable/Attainment		
Utuado Municipio		Unclassifiable/Attainment		
Vega Alta Municipio		Unclassifiable/Attainment		
Vega Baja Municipio		Unclassifiable/Attainment		
Vieques Municipio		Unclassifiable/Attainment		
Villalba Municipio		Unclassifiable/Attainment		
Yabucoa Municipio		Unclassifiable/Attainment		
Yauco Municipio		Unclassifiable/Attainment		

[a] Includes Indian Country located in each county or area, except as otherwise specified.

[1] This date is 90 days after January 5, 2005, unless otherwise noted.

PUERTO RICO—1997 24-HOUR $PM_{2.5}$ NAAQS

[Primary and secondary]

Designated area	Designation [a]		Classification	
	Date [1]	Type	Date	Type
Territory wide:				
Adjuntas Municipio		Unclassifiable/Attainment.		
Aguada Municipio		Unclassifiable/Attainment.		
Aguadilla Municipio		Unclassifiable/Attainment.		
Aguas Buenas Municipio		Unclassifiable/Attainment.		
Aibonito Municipio		Unclassifiable/Attainment.		
Añasco Municipio		Unclassifiable/Attainment.		
Arecibo Municipio		Unclassifiable/Attainment.		
Arroyo Municipio		Unclassifiable/Attainment.		
Barceloneta Municipio		Unclassifiable/Attainment.		
Barranquitas Municipio		Unclassifiable/Attainment.		
Bayamón County		Unclassifiable/Attainment.		
Cabo Rojo Municipio		Unclassifiable/Attainment.		
Caguas Municipio		Unclassifiable/Attainment.		
Camuy Municipio		Unclassifiable/Attainment.		
Canóvanas Municipio		Unclassifiable/Attainment.		
Carolina Municipio		Unclassifiable/Attainment.		
Cataño County		Unclassifiable/Attainment.		
Cayey Municipio		Unclassifiable/Attainment.		
Ceiba Municipio		Unclassifiable/Attainment.		
Ciales Municipio		Unclassifiable/Attainment.		
Cidra Municipio		Unclassifiable/Attainment.		
Coamo Municipio		Unclassifiable/Attainment.		
Comerío Municipio		Unclassifiable/Attainment.		
Corozal Municipio		Unclassifiable/Attainment.		
Culebra Municipio		Unclassifiable/Attainment.		
Dorado Municipio		Unclassifiable/Attainment.		
Fajardo Municipio		Unclassifiable/Attainment.		
Florida Municipio		Unclassifiable/Attainment.		
Guánica Municipio		Unclassifiable/Attainment.		
Guayama Municipio		Unclassifiable/Attainment.		
Guayanilla Municipio		Unclassifiable/Attainment.		
Guaynabo County		Unclassifiable/Attainment.		
Gurabo Municipio		Unclassifiable/Attainment.		
Hatillo Municipio		Unclassifiable/Attainment.		
Hormigueros Municipio		Unclassifiable/Attainment.		
Humacao Municipio		Unclassifiable/Attainment.		
Isabela Municipio		Unclassifiable/Attainment.		
Jayuya Municipio		Unclassifiable/Attainment.		
Juana Díaz Municipio		Unclassifiable/Attainment.		
Juncos Municipio		Unclassifiable/Attainment.		
Lajas Municipio		Unclassifiable/Attainment.		
Lares Municipio		Unclassifiable/Attainment.		
Las Marías Municipio		Unclassifiable/Attainment.		
Las Piedras Municipio		Unclassifiable/Attainment.		
Loíza Municipio		Unclassifiable/Attainment.		
Luquillo Municipio		Unclassifiable/Attainment.		
Manatí Municipio		Unclassifiable/Attainment.		
Maricao Municipio		Unclassifiable/Attainment.		
Maunabo Municipio		Unclassifiable/Attainment.		
Mayagnez Municipio		Unclassifiable/Attainment.		
Moca Municipio		Unclassifiable/Attainment.		
Morovis Municipio		Unclassifiable/Attainment.		
Naguabo Municipio		Unclassifiable/Attainment.		
Naranjito Municipio		Unclassifiable/Attainment.		
Orocovis Municipio		Unclassifiable/Attainment.		
Patillas Municipio		Unclassifiable/Attainment.		
Peñuelas Municipio		Unclassifiable/Attainment.		
Ponce Municipio		Unclassifiable/Attainment.		
Quebradillas Municipio		Unclassifiable/Attainment.		
Rincón Municipio		Unclassifiable/Attainment.		
Río Grande Municipio		Unclassifiable/Attainment.		
Sabana Grande Municipio		Unclassifiable/Attainment.		
Salinas Municipio		Unclassifiable/Attainment.		
San Germán Municipio		Unclassifiable/Attainment.		
San Juan Municipio		Unclassifiable/Attainment.		
San Lorenzo Municipio		Unclassifiable/Attainment.		

PUERTO RICO—1997 24-HOUR $PM_{2.5}$ NAAQS—Continued

[Primary and secondary]

Designated area	Designation [a]		Classification	
	Date [1]	Type	Date	Type
San Sebastián Municipio		Unclassifiable/Attainment.		
Santa Isabel Municipio		Unclassifiable/Attainment.		
Toa Alta Municipio		Unclassifiable/Attainment.		
Toa Baja County		Unclassifiable/Attainment.		
Trujillo Alto Municipio		Unclassifiable/Attainment.		
Utuado Municipio		Unclassifiable/Attainment.		
Vega Alta Municipio		Unclassifiable/Attainment.		
Vega Baja Municipio		Unclassifiable/Attainment.		
Vieques Municipio		Unclassifiable/Attainment.		
Villalba Municipio		Unclassifiable/Attainment.		
Yabucoa Municipio		Unclassifiable/Attainment.		
Yauco Municipio		Unclassifiable/Attainment.		

[a] Includes Indian Country located in each county or area, except as otherwise specified.
[1] This date is 90 days after January 5, 2005, unless otherwise noted.

PUERTO RICO—2006 24-HOUR $PM_{2.5}$ NAAQS

[Primary and secondary]

Designated Area	Designation [a]		Classification	
	Date [1]	Type	Date	Type
Territory wide:				
Adjuntas Municipio		Unclassifiable/Attainment.		
Aguada Municipio		Unclassifiable/Attainment.		
Aguadilla Municipio		Unclassifiable/Attainment.		
Aguas Buenas Municipio		Unclassifiable/Attainment.		
Aibonito Municipio		Unclassifiable/Attainment.		
Añasco Municipio		Unclassifiable/Attainment.		
Arecibo Municipio		Unclassifiable/Attainment.		
Arroyo Municipio		Unclassifiable/Attainment.		
Barceloneta Municipio		Unclassifiable/Attainment.		
Barranquitas Municipio		Unclassifiable/Attainment.		
Bayamón County		Unclassifiable/Attainment.		
Cabo Rojo Municipio		Unclassifiable/Attainment.		
Caguas Municipio		Unclassifiable/Attainment.		
Camuy Municipio		Unclassifiable/Attainment.		
Canóvanas Municipio		Unclassifiable/Attainment.		
Carolina Municipio		Unclassifiable/Attainment.		
Cataño County		Unclassifiable/Attainment.		
Cayey Municipio		Unclassifiable/Attainment.		
Ceiba Municipio		Unclassifiable/Attainment.		
Ciales Municipio		Unclassifiable/Attainment.		
Cidra Municipio		Unclassifiable/Attainment.		
Coamo Municipio		Unclassifiable/Attainment.		
Comerío Municipio		Unclassifiable/Attainment.		
Corozal Municipio		Unclassifiable/Attainment.		
Culebra Municipio		Unclassifiable/Attainment.		
Dorado Municipio		Unclassifiable/Attainment.		
Fajardo Municipio		Unclassifiable/Attainment.		
Florida Municipio		Unclassifiable/Attainment.		
Guánica Municipio		Unclassifiable/Attainment.		
Guayama Municipio		Unclassifiable/Attainment.		
Guayanilla Municipio		Unclassifiable/Attainment.		
Guaynabo County		Unclassifiable/Attainment.		
Gurabo Municipio		Unclassifiable/Attainment.		
Hatillo Municipio		Unclassifiable/Attainment.		
Hormigueros Municipio		Unclassifiable/Attainment.		
Humacao Municipio		Unclassifiable/Attainment.		
Isabela Municipio		Unclassifiable/Attainment.		
Jayuya Municipio		Unclassifiable/Attainment.		
Juana Díaz Municipio		Unclassifiable/Attainment.		
Juncos Municipio		Unclassifiable/Attainment.		
Lajas Municipio		Unclassifiable/Attainment.		
Lares Municipio		Unclassifiable/Attainment.		
Las Marías Municipio		Unclassifiable/Attainment.		
Las Piedras Municipio		Unclassifiable/Attainment.		
Loíza Municipio		Unclassifiable/Attainment.		

PUERTO RICO—2006 24-HOUR $PM_{2.5}$ NAAQS—Continued

[Primary and secondary]

Designated Area	Designation [a]		Classification	
	Date [1]	Type	Date	Type
Luquillo Municipio		Unclassifiable/Attainment.		
Manatí Municipio		Unclassifiable/Attainment.		
Maricao Municipio		Unclassifiable/Attainment.		
Maunabo Municipio		Unclassifiable/Attainment.		
Mayagnez Municipio		Unclassifiable/Attainment.		
Moca Municipio		Unclassifiable/Attainment.		
Morovis Municipio		Unclassifiable/Attainment.		
Naguabo Municipio		Unclassifiable/Attainment.		
Naranjito Municipio		Unclassifiable/Attainment.		
Orocovis Municipio		Unclassifiable/Attainment.		
Patillas Municipio		Unclassifiable/Attainment.		
Peñuelas Municipio		Unclassifiable/Attainment.		
Ponce Municipio		Unclassifiable/Attainment.		
Quebradillas Municipio		Unclassifiable/Attainment.		
Rincón Municipio		Unclassifiable/Attainment.		
Río Grande Municipio		Unclassifiable/Attainment.		
Sabana Grande Municipio		Unclassifiable/Attainment.		
Salinas Municipio		Unclassifiable/Attainment.		
San Germán Municipio		Unclassifiable/Attainment.		
San Juan Municipio		Unclassifiable/Attainment.		
San Lorenzo Municipio		Unclassifiable/Attainment.		
San Sebastián Municipio		Unclassifiable/Attainment.		
Santa Isabel Municipio		Unclassifiable/Attainment.		
Toa Alta Municipio		Unclassifiable/Attainment.		
Toa Baja County		Unclassifiable/Attainment.		
Trujillo Alto Municipio		Unclassifiable/Attainment.		
Utuado Municipio		Unclassifiable/Attainment.		
Vega Alta Municipio		Unclassifiable/Attainment.		
Vega Baja Municipio		Unclassifiable/Attainment.		
Vieques Municipio		Unclassifiable/Attainment.		
Villalba Municipio		Unclassifiable/Attainment.		
Yabucoa Municipio		Unclassifiable/Attainment.		
Yauco Municipio		Unclassifiable/Attainment.		

[a] Includes Indian Country located in each county or area, except as otherwise specified.
[1] This date is 30 days after November 13, 2009, unless otherwise noted.

* * * * *

■ 57. Section 81.356 is amended as follows:

■ a. By removing the tables titled ''Virgin Islands—$PM_{2.5}$ (Annual NAAQS)'' and ''Virgin Islands—$PM_{2.5}$ [24-hour NAAQS]''.

■ b. By adding three tables titled ''Virgin Islands—1997 Annual $PM_{2.5}$ NAAQS (Primary and Secondary)'' and ''Virgin Islands—1997 24-hour $PM_{2.5}$ NAAQS (Primary and Secondary)'' and ''Virgin Islands—2006 24-hour $PM_{2.5}$ NAAQS (Primary and Secondary)'' before the table titled ''Virgin Islands—NO_2 (1971 Annual Standard)''.

The additions read as follows:

§ 81.356 Virgin Islands.

* * * * *

VIRGIN ISLANDS—1997 ANNUAL $PM_{2.5}$ NAAQS

[Primary and secondary]

Designated area	Designation [a]		Classification	
	Date [1]	Type	Date	Type
Statewide:				
St. Croix		Unclassifiable/Attainment.		
St. John		Unclassifiable/Attainment.		
St. Thomas		Unclassifiable/Attainment.		

[a] Includes Indian Country located in each county or area, except as otherwise specified.
[1] This date is 90 days after January 5, 2005, unless otherwise noted.

VIRGIN ISLANDS—1997 24-HOUR $PM_{2.5}$ NAAQS

[Primary and secondary]

Designated area	Designation [a]		Classification	
	Date [1]	Type	Date	Type
Territory wide:				
St. Croix		Unclassifiable/Attainment.		
St. John		Unclassifiable/Attainment.		
St. Thomas		Unclassifiable/Attainment.		

[a] Includes Indian Country located in each county or area, except as otherwise specified.
[1] This date is 90 days after November 13, 2009, unless otherwise noted.

VIRGIN ISLANDS—2006 24-HOUR $PM_{2.5}$ NAAQS

[Primary and secondary]

Designated area	Designation [a]		Classification	
	Date [1]	Type	Date	Type
Territory wide:				
St. Croix		Unclassifiable/Attainment.		
St. John		Unclassifiable/Attainment.		
St. Thomas		Unclassifiable/Attainment.		

[a] Includes Indian Country located in each county or area, except as otherwise specified.
[1] This date is 30 days after November 13, 2009, unless otherwise noted.

[FR Doc. 2014–10395 Filed 5–30–14; 8:45 am]

BILLING CODE 6560–50–P

FEDERAL REGISTER

Vol. 79 Monday,

No. 105 June 2, 2014

Part IV

Department of Transportation

Federal Highway Administration
23 CFR Part 450

Federal Transit Administration
49 CFR Part 613

Statewide and Nonmetropolitan Transportation Planning; Metropolitan Transportation Planning; Proposed Rule

DEPARTMENT OF TRANSPORTATION

Federal Highway Administration

23 CFR Part 450

Federal Transit Administration

49 CFR Part 613

[Docket No. FHWA–2013–0037; FHWA RIN 2125–AF52; FTA RIN 2132–AB10]

Statewide and Nonmetropolitan Transportation Planning; Metropolitan Transportation Planning

AGENCY: Federal Highway Administration (FHWA), Federal Transit Administration (FTA); U.S. Department of Transportation (DOT).

ACTION: Notice of proposed rulemaking (NPRM).

SUMMARY: The FHWA and the FTA are jointly issuing this NPRM to propose revisions to the regulations governing the development of metropolitan transportation plans and programs for urbanized areas, State transportation plans and programs, and the congestion management process. The changes reflect recent passage of the Moving Ahead for Progress in the 21st Century Act (MAP–21). The MAP–21 continues many provisions related to transportation planning from prior laws; however, it introduces transformational changes and adds some new provisions. The proposed rule would make the regulations consistent with current statutory requirements and proposes the following: A new mandate for State departments of transportation (States) and metropolitan planning organizations (MPO) to take a performance-based approach to planning and programming; a new emphasis on the nonmetropolitan transportation planning process, by requiring States to have a higher level of involvement with nonmetropolitan local officials and providing a process for the creation of regional transportation planning organizations (RTPO); a structural change to the membership of the larger MPOs; a new framework for voluntary scenario planning; revisions to the integration of the planning and environmental review process; and a process for programmatic mitigation plans.

DATES: Comments must be received on or before September 2, 2014. Late-filed comments will be considered to the extent practicable.

ADDRESSES: Mail or hand deliver comments to: Docket Management Facility, U.S. Department of Transportation, 1200 New Jersey Avenue SE., Washington, DC 20590, or submit electronically at *http://www.regulations.gov,* or fax comments to (202) 493–2251. All comments should include the docket number that appears in the heading of this document. All comments received will be available for examination and copying at the above address from 9 a.m. to 5 p.m., e.t., Monday through Friday, except Federal holidays. Those desiring notification of receipt of comments must include a self-addressed, stamped postcard or may print the acknowledgment page that appears after submitting comments electronically. Anyone is able to search the electronic form of all comments in any one of our dockets by the name of the individual submitting the comment (or signing the comment, if submitted on behalf of an association, business, or labor union). You may review the U.S. Department of Transportation's (DOT) complete Privacy Act Statement in the **Federal Register** published on April 11, 2000 (65 FR 19477).

Electronic Access and Filing

This document and all comments received may be viewed online through the Federal eRulemaking portal at *http://www.regulations.gov.* The Web site is available 24 hours each day, 365 days each year. An electronic copy of this document may also be downloaded by accessing the Office of the Federal Register's home page at: *https://www.federalregister.gov.*

FOR FURTHER INFORMATION CONTACT: For the FHWA: Mr. Harlan W. Miller, Planning Oversight and Stewardship Team (HEPP–10), (202) 366–0847; or Ms. Anne Christenson, Office of the Chief Counsel (HCC–30), (202) 366–1356. For the FTA: Ms. Sherry Riklin, Office of Planning and Environment, (202) 366–5407; Mr. Dwayne Weeks, Office of Planning and Environment, (202) 493–0316; or Mr. Christopher Hall, Office of Chief Counsel, (202) 366–5218. Both agencies are located at 1200 New Jersey Avenue SE., Washington, DC 20590. Office hours are from 8:00 a.m. to 4:30 p.m., e.t. for FHWA, and 9 a.m. to 5:30 p.m., e.t. for FTA, Monday through Friday, except Federal holidays.

SUPPLEMENTARY INFORMATION:

Table of Contents for SUPPLEMENTARY INFORMATION

I. Executive Summary
II. Background
III. Major Proposed Revisions to the Planning Rule
IV. Section-by-Section Discussion
V. Regulatory Analyses and Notices

I. Executive Summary

A. Purpose of the Regulatory Action

The MAP–21 (Pub. L. 112–141) transforms the Federal-aid highway program and the Federal transit program by requiring a transition to performance-driven, outcome-based approaches to key areas. With respect to planning, although MAP–21 leaves the basic framework of the planning process largely untouched, the statute introduces critical changes to the planning process itself by requiring States, MPOs, and providers of public transportation to link investment priorities (the transportation improvement program of projects) to the achievement of performance targets that they would establish to address performance measures in the key areas such as safety, infrastructure condition, congestion, system reliability, emissions, and freight movement.

Accordingly, this proposed rule is central to the implementation of the overall performance management framework created by MAP–21. Additional changes include a new emphasis on nonmetropolitan transportation planning, changes to the structure of MPOs that serve a transportation management area (TMA), and codification of some existing best practices.

B. Summary of the Major Provisions of the Regulatory Action in Question

As a fundamental element of a performance management framework, States, MPOs, and providers of public transportation will need to establish targets in key national performance areas to document expectations for future performance. This NPRM proposes in 23 CFR 450.206 and 450.306 that States, MPOs, and providers of public transportation coordinate their targets. The MAP–21 requires that MPOs reflect those targets in their metropolitan transportation plan and encourages States to do the same in their long-range statewide transportation plan. Accordingly, this NPRM proposes that MPOs would reflect those targets in the metropolitan transportation plans. In addition, FHWA and FTA propose that States should reflect the targets in their long-range statewide transportation plans. Both States and MPOs would describe the anticipated effect toward achieving the targets in their respective transportation improvement programs.

In addition to these proposed changes to the planning provisions, MAP–21 contains new performance-related provisions requiring States, MPOs, and public transportation providers to

develop other performance-based plans and processes. This NPRM proposes in §§ 450.206 and 450.306 that MPOs and States must integrate the goals, objectives, performance measures, and targets of other performance-based plans and processes into their planning processes.

This proposal also places a new emphasis on the importance of nonmetropolitan transportation planning. Proposed §§ 450.208 through 450.210 and 450.216 require the States to work more closely with nonmetropolitan areas. Additionally, this NPRM proposes that States should have the option of designating RTPOs to help address the planning needs of the nonmetropolitan areas of the State.

The MAP–21 made two changes specific to the metropolitan planning process. The first change affects the policy board structure of large MPOs. For each MPO serving a TMA, the planning statutes and current planning regulations identify a list of government or agency officials that must be on that policy board. Consistent with MAP–21, this NPRM proposes in § 450.310 to add representation by providers of public transportation to this list of officials. The second change proposes in § 450.324 of this NPRM that MPOs may use scenario planning, an analytical framework to inform decisionmakers about the implications of various investments and policies on transportation system condition and performance, during the development of their plan. Both of these proposed changes will support the effective implementation of a performance-based planning process.

In addition to changing the planning statutes, MAP–21 continues efforts to expedite project delivery through better coordination between the transportation planning process and the environmental review process. Section 1310 of MAP–21 creates an additional process for integrating planning and the environmental review activities, but also preserves other authorities for integration. Sections 450.212 and 450.318 of the planning regulations are among those pre-MAP–21 authorities. Together with implementing regulations for the National Environmental Policy Act of 1969 [1] adopted by the President's Council on Environmental Quality [2] and the FHWA and FTA,[3] §§ 450.212 and 450.318 have long provided pathways for using transportation planning information and decisions in the environmental review process. With one exception, FHWA and FTA propose to retain the existing regulatory provisions in §§ 450.212 and 450.318, as well as the guidance in Appendix A. The agencies will address implementation of section 1310 of MAP–21 and any needed updates to provisions on pre-MAP–21 integration authorities through separate rulemaking or guidance. The exception is the proposed deletion of paragraph (d) of § 450.318 due to revisions made to 49 U.S.C. 5309 by MAP–21 (references to mandatory Alternatives Analysis within Appendix A are also proposed to be removed consistent with those changes). More specifically, MAP–21 removed the requirement for a stand-alone alternatives analysis for projects that seek section 5309(d) or (e) funding. In addition, the proposed new sections 450.214 and 450.320 would provide guidance on the optional development of programmatic mitigation plans for use during the project development and environmental review process.

SUMMARY—KEY CHANGES PROPOSED TO THE PLANNING RULE BY THIS NPRM

Proposed change	Description	Key regulatory section(s)
Performance Based Planning and Programming.	The statewide and metropolitan transportation planning processes shall provide for the use of a performance-based approach to transportation decisionmaking to support the national goals described in 23 U.S.C. 150(b) and the general purposes described in 29 U.S.C. 5301. These processes are where decision-making and investment priorities would be linked to targets in key areas. See 23 U.S.C. 150 and 49 U.S.C. 5326 and 5329.	23 CFR 450.206(c), 23 CFR 450.208(g), 23 CFR 450.216(f), 23 CFR 450.218(r), 23 CFR 450.226, 23 CFR 450.300(a), 23 CFR 450.306(a), 23 CFR 450.306(d), 23 CFR 450.314(a), 23 CFR 450.314(e), 23 CFR 450.314(g), 23 CFR 450.324(f)(3), 23 CFR 450.324(f)(4), 23 CFR 450.324(i)(1)(iii), 23 CFR 450.324(i)(2), 23 CFR 450.326(c), 23 CFR 450.326(d), 23 CFR 450.340.
New emphasis on the importance of nonmetropolitan transportation planning.	A State may establish and designate Regional Transportation Planning Organizations (RTPOs).	23 CFR 450.210(d).
	State consultation with nonmetropolitan local officials in the statewide planning process becomes State cooperation with nonmetropolitan local officials or, if appropriate, RTPOs.	23 CFR 450.208(a)(4), 23 CFR 450.210(b), 23 CFR 450.216(g), 23 CFR 450.218(c), 23 CFR 45.222(c).
Changes specific to the metropolitan planning process.	MPOs that serve an area designated as a TMA shall include representation by providers of public transportation.	23 CFR 450.310(d)(1)(ii).
	MPOs may use scenario planning during the development of their plan.	23 CFR 450.324(i).
Programmatic Mitigation	States and MPOs may develop programmatic mitigation plans to address potential environmental impacts of future transportation projects as part of the statewide or metropolitan transportation planning process.	23 CFR 450.214, 23 CFR 450.320.

C. Costs and Benefits

The FHWA and FTA expect that the proposed regulatory changes to the planning process would improve decisionmaking through increased transparency and accountability and support the national goals described in 23 U.S.C. 150(b) and the general purposes described in 49 U.S.C. 5301. The FHWA and FTA have not been able to find data or empirical studies to assist it in monetizing or quantifying the benefits of this NPRM. In addition, estimates of the benefits of this NPRM would be difficult to develop. The proposed rule would promote transparency by requiring the establishment of performance targets in key areas, such as safety, infrastructure condition, system reliability, emissions,

[1] 42 U.S.C. 4321, et seq.

[2] 40 CFR parts 1500–1508.

[3] 23 CFR part 771.

and congestion, and by expressly linking investment decisions to the achievement of such targets. This would be documented in plans or programs developed with public review. The proposal would establish accountability through mandating reports on progress toward meeting those targets.

Other elements of the proposal also would improve decisionmaking, such as representation by providers of public transportation on each MPO that serves a TMA, updating the metropolitan planning agreements, requiring States to have a higher level of involvement with nonmetropolitan local officials, and providing an optional process for the creation of RTPOs.

The FHWA and FTA estimate the total cost of this proposed rule is $30.8 million annually. To implement the proposed changes in support of a more efficient, performance-based planning process, FHWA and FTA estimate that the aggregate increase in costs attributable to the proposed rulemaking for all 52 States [4] and 420 (estimated) MPOs is approximately $28.3 million per year. These costs are primarily attributable to an increase in staff time needed to meet the proposed requirements. For the estimated 600 total providers of public transportation that operate within metropolitan planning areas, the cost would be $2.4 million per year in total. The total Federal, State, and local cost of the planning program is $1,166,471,400. As the cost burden of this rule is estimated to be 2.6 percent of the total planning program, FHWA and FTA believe the economic impact of this rulemaking would be minimal and the benefits of implementing this rulemaking would outweigh the costs.

SUMMARY OF AVERAGE ANNUAL REGULATORY COSTS AND BURDEN HOURS OF EFFORT

Entity	Total additional cost	Non-Federal share (20%)	Average additional person hours per agency
TMA MPOs (210)	$18,402,300	$3,680,500	1,800
Non-TMA MPOs (210)	3,909,200	781,800	400
States (52)	6,075,800	1,215,200	2400
Providers of Public Transportation (600)	2,440,000	488,000	100
Total	30,827,300	6,165,500	

II. Background

1. Introduction to the Planning Process

The Statewide and Nonmetropolitan Transportation Planning program and the Metropolitan Transportation Planning program provide funding to support cooperative, continuous, and comprehensive (3–C) planning for making transportation investment decisions throughout each State—both in metropolitan and nonmetropolitan areas. Since the 1962 Federal-aid Highway Act,[5] Federal authorizing legislation for expenditure of surface transportation funds has required metropolitan and statewide transportation plans and transportation improvement programs to be developed through a 3–C planning process. Over successive reauthorization cycles, including the passage of MAP–21 in July 2012, Congress has revised and expanded the requirements for 3–C planning.

The Statewide and Nonmetropolitan Transportation Planning Process

States must undertake a 3–C statewide transportation planning process to develop a multimodal long-range statewide transportation plan and a statewide transportation improvement program (STIP).[6] The long-range statewide transportation plan must provide for the development of transportation facilities that function as an intermodal State transportation system and must cover at least a 20-year planning horizon at the time of adoption by the State. There is not a required update cycle for the long-range statewide transportation plan. When developing a plan, States need to cooperate with the MPOs in the metropolitan areas. In nonmetropolitan areas, States must cooperate with local elected officials who have the responsibility for transportation. Some States may have regional planning organizations to help support the planning process in nonmetropolitan areas. States also must provide an opportunity for public comment on the long-range statewide transportation plan. As part of public engagement, FHWA and FTA encourage States to include minority and low-income populations and otherwise incorporate environmental justice principles into the statewide and nonmetropolitan planning process and documents as appropriate.

In addition, States must develop a federally approved STIP at least once every 4 years. The STIP contains a 4-year program of projects, and must be consistent with the long-range statewide and metropolitan transportation plans. The STIP must incorporate the transportation improvement programs (TIPs) developed by MPOs either directly or by reference without alteration. Finally, the STIP must identify the source of funding that is reasonably expected to be available to support the program of projects in the STIP. When the State submits the STIP to FHWA and FTA for approval, the State must certify that the metropolitan and statewide and nonmetropolitan transportation planning processes are in compliance with applicable requirements. The FHWA and FTA will approve the STIP if they jointly determine that the STIP substantially meets the statewide and nonmetropolitan transportation planning requirements.

The Metropolitan Transportation Planning Process

Metropolitan transportation planning occurs in urbanized areas with a population of 50,000 or greater.[7] An MPO is the policy board of the organization created and designated by the Governor and local officials to carry out the metropolitan planning process in an urbanized area. The boundary of the metropolitan planning area covered by the MPO planning process is established by agreement between the Governor and the MPO and, in general, encompasses the current urbanized area

[4] This number (52 States) includes the 50 States, the District of Columbia, and Puerto Rico. This is consistent with the definition of ''States'' in the current and proposed regulations at 23 CFR 450.104.

[5] Public Law 87–866, 76 Stat. 1145 (1962).

[6] See 23 U.S.C. 135.

[7] 23 U.S.C. 134.

and the area to be urbanized during a 20-year forecast period. Certain urbanized areas—generally those over 200,000 in population—are designated as TMAs.

An MPO establishes the investment priorities of Federal transportation funds in its metropolitan areas through the metropolitan transportation plan and TIP. Each MPO, regardless of size, must prepare a metropolitan transportation plan and update it every 4 or 5 years. The plan must cover at least a 20-year planning horizon at the time of adoption by the MPO. Before it adopts its plan, the MPO must provide a reasonable opportunity for public comment on the plan's content. As part of public engagement, FHWA and FTA encourage MPOs to include minority and low-income populations and otherwise incorporate environmental justice principles into the metropolitan planning process and documents as appropriate.

The MPO, in cooperation with the State and providers of public transportation, must also develop a TIP. The TIP is a prioritized listing/program of transportation projects covering a period of 4 years, and must include a financial plan that describes the source of funding that would be reasonably expected to be available to support the projects in the TIP. The MPO must update and approve the TIP at least once every 4 years. Prior to approving the TIP, the MPO must provide a reasonable opportunity for public comment on the TIP. The TIP also is subject to approval by the Governor. When the MPO submits the TIP to the State, the MPO must certify that the metropolitan transportation planning process is in compliance with applicable requirements.

In the TMAs, the metropolitan transportation planning process also must include a congestion management process (CMP).[8] The CMP provides for the effective management of new and existing transportation facilities through the use of travel demand reduction and operational strategies.

The FHWA and FTA must certify the transportation planning process in TMAs at least once every 4 years. During that certification process, FHWA and FTA will review whether the process complies with the metropolitan transportation planning requirements, including the new MAP–21 requirements.

2. What Does MAP–21 Do?

The MAP–21 leaves the basic framework of the planning process, as described above, largely untouched. However, MAP–21 introduces transformational changes to the planning process to increase transparency and accountability.[9] Most significantly, States and MPOs now must take a performance-based approach to planning and programming, linking investment decisionmaking to the achievement of performance targets.[10] Along with its emphasis on performance-based planning and programming, MAP–21 emphasizes the nonmetropolitan transportation planning process by requiring States to have a higher level of involvement with nonmetropolitan local officials and providing for the optional creation of RTPOs. The MAP–21 also makes some structural changes to the membership of the MPOs that serve a TMA. Finally, MAP–21 includes voluntary provisions related to scenario planning and developing programmatic mitigation plans. Many of these non-performance management changes codify existing best planning practices.

3. Stakeholder Engagement

Beginning in 2009, FHWA and FTA initiated a series of peer exchanges, conferences, and workshops to develop a framework for performance-based planning and programming. These sessions explored how States, MPOs, regional planning organizations, and providers of public transportation were implementing performance-based planning and programming, both individually and in concert with their planning partners and stakeholders. During FHWA's and FTA's outreach efforts, the States and MPOs emphasized the need to integrate performance-based planning and programming into the existing, long-standing planning processes, and to avoid creating a separate or distinct process for performance-based planning.

After the passage of MAP–21, FHWA and FTA continued to engage stakeholders to discuss how FHWA and FTA could best implement the various MAP–21 changes to the planning process. This outreach included ongoing workshops on performance-based planning and programming, general and topic-based Webinars, an online dialogue, and participation at stakeholder meetings and conferences. The FHWA and FTA hosted Webinars on the planning provisions of MAP–21, as well as specific topics such as performance-based planning and programming. Participants in the Webinars included States, MPOs, and providers of public transportation.

The FTA also conducted an online dialogue on the topic of TMA MPO structure and the new MAP–21 requirement to include representation by providers of public transportation in that structure. Issues raised in the dialogue included voting representation and determining the process for inclusion of providers of public transportation on MPOs. A transcript from this online dialogue is included with the docket for this NPRM.

A list of the various stakeholder outreach initiatives, including any notes, meeting minutes, or recordings taken during the outreach, and comments received prior to publication, if any, are included in the docket for this NPRM. External stakeholders frequently commented on the need for flexibility and simplicity in implementing MAP–21 requirements given the varying size, capabilities, and operating environments of States, MPOs, and providers of public transportation. Stakeholders also expressed concerns regarding potential difficulties, uncertainties, and risks associated with implementing new provisions such as performance-based planning and programming.

III. Major Proposed Revisions to the Planning Rule

A. Performance-Based Planning and Programming

The MAP–21 transforms the Federal-aid highway program and the Federal transit program by requiring a transition to a performance-driven, outcome-based program that provides for a greater level of transparency and accountability, improved project decisionmaking, and more efficient investment of Federal transportation funds.[11] As part of this new performance-based approach, recipients of Federal-aid highway program funds and Federal transit funds would be required to link the investment priorities contained in the STIP and TIP to achieving performance targets. This proposed rule is one of several proposed rules that would establish the basic elements of a performance driven, outcome-based program. This proposed rule is

[8] 23 U.S.C. 134(k)(3).

[9] MAP–21 sections 1201 and 1202 revising 23 U.S.C. 134 and 135; MAP–21 sections 20005 and 20006 revising 49 U.S.C. 5303 and 5304.

[10] By October 1, 2017, the Secretary of Transportation must submit to Congress a report evaluating the overall effectiveness of performance-based planning and the effectiveness of the performance-based planning process of each State and MPO. In addition, the Secretary will be required to report on the extent to which the MPOs have achieved the performance targets. 23 U.S.C. 134(l) and 135(h)(2) and 49 U.S.C. 5303(l) and 5304(h)(2).

[11] See, e.g., 23 U.S.C. 150(a).

important to the FHWA's and FTA's overall implementation of the performance management provisions of MAP–21 because the planning process brings all of the elements together by tying performance to investment decisionmaking.

Several MAP–21 provisions administered by FHWA and FTA focus on the achievement of performance outcomes. In implementing these provisions, FHWA and FTA are undertaking a number of separate but related rulemakings. This NPRM addresses the metropolitan transportation planning and statewide and nonmetropolitan transportation planning provisions of MAP–21. Additional FHWA and FTA performance-related rules include: Federal-aid Highway Performance Measure Rules [RIN 2125–AF49, 2125–AF53, 2125–AF54], updates to the Highway Safety Improvement Program Regulations [RIN 2125–AF56], Federal-aid Highway Risk-Based Asset Management Plan Rule for the National Highway System (NHS) [RIN 2125–AF57], Transit Asset Management Rule [RIN 2132–AB07], and National and Public Transportation Safety Plans Rule [RIN 2132–AB20].[12] [13] A more detailed discussion of these related rulemakings is included in FHWA's first proposed Federal-aid Highway Performance Measure Rule, which is available online at *www.fhwa.dot.gov/tpm/*.

These performance-related rules for the various FHWA and FTA programs will implement the basic elements of a performance management framework, such as establishment of performance measures and targets and reporting requirements. The planning process brings these elements together—it is where States, MPOs, and providers of public transportation will link decisionmaking and investment priorities to performance targets in key areas.[14] The FHWA and FTA will establish national performance measures in key areas, including safety, infrastructure condition, congestion, system reliability, emissions, and freight movement.[15]

The performance management framework requires States, MPOs, and providers of public transportation to use these measures to establish targets in these key national performance areas to document expectations for future performance.[16] The proposed regulatory changes in §§ 450.206 and 450.306 mandate States and MPOs, respectively, to coordinate their targets with each other to ensure consistency, to the maximum extent practicable. In addition, for transit-related targets, States and MPOs would need to coordinate their targets relating to safety and state of good repair with providers of public transportation to ensure consistency with other performance-based provisions applicable to transit providers, to the maximum extent practicable. This coordination through the planning process should help align MPO and State decisionmaking and advance performance outcomes for the States.

The FTA and FHWA request public comment on the following questions relating to target-setting: What obstacles do States, MPO and transit providers foresee to the coordination among them that is necessary in order to establish targets? What mechanisms currently exist or could be created to facilitate coordination? What role should FHWA and FTA play in assisting States, MPOs and transit providers in complying with these new target-setting requirements? What mechanisms exist or could be created to share data effectively amongst States, MPOs and transit providers? For those States, MPOs and transit providers that already utilize some type of performance management framework, are there best practices that they can share?

Once performance targets are selected, MAP–21 requires that MPOs reflect those targets in their metropolitan transportation plans and encourages States to do the same. Accordingly, this NPRM proposes [17] that, in their transportation plans, MPOs would need to describe these performance targets, evaluate the condition and performance of the transportation system, and report on progress toward the achievement of their performance targets.[18] In addition, States should include similar information in their transportation plans.[19] Importantly, as part of the State and MPO program of projects (the STIPs and TIPs, respectively), the States and MPOs would need to describe, to the maximum extent practicable, the anticipated effect of the investment priorities (or their program of transportation improvement projects) toward achieving the performance targets.[20] As the long-range plans, STIPs, and TIPs direct investment priorities, it is critical to ensure that performance targets are considered during the development of these documents.

The MAP–21 performance-related provisions also require States, MPOs, and public transportation providers to develop other performance-based plans and processes or impose new requirements on existing performance-based plans and processes. These performance-based plans and processes include the Congestion Mitigation and Air Quality Improvement (CMAQ) Program performance plan,[21] the strategic highway safety plan,[22] the public transportation agency safety plan,[23] the highway and transit asset management plans,[24] and, optionally, a State freight plan.[25] This NPRM proposes in §§ 450.206 and 450.306 that MPOs and States integrate the goals, objectives, performance measures, and targets of these other performance plans and processes into their planning process.[26] This integration would help ensure that key performance elements of these other performance plans are considered as part of the investment decisionmaking process.

The metropolitan planning agreement helps facilitate the working relationship among MPOs, States, and providers of public transportation. In this NPRM, FHWA and FTA propose to amend § 450.314 to require that MPOs include a description in their metropolitan planning agreements that identifies how the parties would cooperatively implement these performance-based planning provisions. The amended metropolitan planning agreements would identify the coordinated processes for the collection of performance data, the selection of performance targets for the metropolitan area, the reporting of metropolitan area targets, and the reporting of actual system performance related to those targets. The agreements would also describe the roles and responsibilities

[12] The FTA anticipates publishing a consolidated Advance Notice of Proposed Rulemaking that will present the two transit rules under RIN 2132–AB20.

[13] Another performance-related rule issued by the National Highway Traffic Safety Administration is the Uniform Procedures for State Highway Safety Grant Programs, Interim Final Rule, 78 FR 4986 (January 23, 2013) (to be codified at 23 CFR part 1200).

[14] In addition to establishing targets related to the performance measures identified in Title 23 and Chapter 53 of Title 49, States and MPOs may establish targets related to locally created measures.

[15] See 23 U.S.C. 150(b) and 49 U.S.C. 5326(c) and 5329.

[16] See 23 U.S.C. 134(h)(2), 23 U.S.C. 135(d)(2), 49 U.S.C. 5303(h)(2), and 49 U.S.C. 5304(d)(2).

[17] *See* proposed §§ 450.216, 450.218, 450.324 and 450.326.

[18] *See* 23 U.S.C. 134(i)(2) and 49 U.S.C. 5303(i)(2).

[19] 23 U.S.C. 135(f)(7) and 49 U.S.C. 5304(f)(7).

[20] *See* 23 U.S.C. 134(j)(2)(D), 23 U.S.C. 135(g)(4), 49 U.S.C. 5303(j)(2)(D), and 49 U.S.C. 5304(g)(4).

[21] *See* 23 U.S.C. 149.

[22] *See* 23 U.S.C. 130 and 148.

[23] *See* 49 U.S.C. 5329.

[24] *See* 23 U.S.C. 119 and 49 U.S.C. 5326.

[25] *See* MAP–21 Section 1118.

[26] *See* 23 U.S.C. 134(h)(2)(D), 23 U.S.C. 135(d)(2)(C), 49 U.S.C. 5303(h)(2)(D), and 49 U.S.C. 5304(d)(2)(C).

for the collection of data for the NHS. Including this description is critical because of the new requirements for a State asset management plan for the NHS and establishment of performance measures and targets.[27]

The FHWA and FTA seek public comment on how regional planning coordination can be further improved in situations where multiple MPOs serve one or several adjacent urbanized areas. Additionally, FHWA and FTA seek public comment on additional mechanisms that could be created to improve regional coordination in situations where there may be multiple MPOs serving a common urbanized area or adjacent urbanized areas.

B. New Emphasis on Nonmetropolitan Transportation Planning

As indicated by the change in the title to the statutory section, MAP–21 places a new emphasis on the importance of nonmetropolitan transportation planning. The MAP–21 requires the States to work more closely with nonmetropolitan areas. It also gives States the opportunity to designate RTPOs to help address the planning needs of the nonmetropolitan area of the State.

Prior to MAP–21, when developing the long-range statewide transportation plan and the STIP, the State was required to consult with nonmetropolitan local officials, which meant that the State would confer with nonmetropolitan local officials and consider their views.[28] Under MAP–21 and these proposed regulations, States retain decisionmaking authority, but would be required to cooperate with nonmetropolitan local officials, which means that they would be required to work together to achieve a common outcome.[29] Changing from ''consultation'' to ''cooperation'' means States would need to work more closely with nonmetropolitan local officials in the development of the long-range statewide transportation plan and the STIP.

To support States' efforts to cooperate with nonmetropolitan areas, MAP–21 provides a more formal framework for States to optionally designate and establish RTPOs.[30] States have long had the option of establishing regional planning organizations to conduct transportation planning in nonmetropolitan areas, and several States have successfully done so. The MAP–21 codifies this best practice by formally providing for RTPOs. This NPRM proposes in § 450.210 that States may designate and establish RTPOs, and that the duties of the RTPO include the development and maintenance of regional long-range multimodal transportation plans and regional TIPs and fostering the coordination of local planning. These regional plans and programs, along with public involvement, would assist the State in development of the long-range statewide transportation plan and the STIP.

C. Additions to the Metropolitan Planning Process

The MAP–21 made two changes specific to the metropolitan planning process—one change affects the policy board structure of large MPOs, and the second establishes a process for scenario planning. Both of these changes would support the effective implementation of a performance-based planning process.

First, for each MPO serving a TMA, the planning statutes and current planning regulations identify a list of government or agency officials that must be on that policy board, including local elected officials, administrators or operators of major modes of transportation, and appropriate State officials. The MAP–21 specifically identifies in this list[31] representatives of providers of public transportation. This proposal would add representatives of providers of public transportation to the list of officials in § 450.310. This NPRM proposes that representatives of providers of public transportation would have equal decisionmaking rights and authorities as other officials who are on the policy board of an MPO that serves a TMA. It is up to the MPO, in cooperation with providers of public transportation, to determine how this representation will be structured and established. The MPOs can restructure to meet this requirement without being redesignated by the Governor and local officials.

Including public transportation representation on each MPO serving a TMA supports the new performance requirements for providers of public transportation, including the coordination of MPO targets with providers of public transportation, the coordination of public transportation provider targets with MPOs, and the integration of public transportation performance plans into the metropolitan transportation planning process.

Second, this NPRM proposes in § 450.324 that MPOs may use scenario planning during the development of their metropolitan transportation plans.[32] Scenario planning is currently used by many MPOs as part of their transportation planning process, and FHWA and FTA consider it a best practice.[33]

Scenario planning is an analytical framework that evaluates the effects of alternative policies, plans and/or programs on the future of a community or region. Scenario planning informs decision makers and the public on the potential implications of various transportation system investments and performance. Scenario planning may consider potential regional investment strategies, distribution of population and employment, land use, future climate scenarios, system performance measures including locally developed measures, and the relationship between investments and local priorities. A defining characteristic of successful scenario planning is that it actively involves the public, the business community, and elected officials on a broad scale, educating them about, and incorporating their values and feedback into future plans.

The FHWA's and FTA's proposal encourages MPOs to use scenario planning during development of the transportation plan. If used, it should include an analysis of how the preferred scenario maintains or improves transportation system condition and performance. Use of scenario planning can improve the effectiveness of a performance management approach because it allows decisionmakers to understand alternative approaches to achieving their performance targets and optimize the use of limited transportation funds.

D. Programmatic Mitigation

In addition to revising the planning statutes, MAP–21 provides an array of provisions designed to increase innovation and improve efficiency, effectiveness, and accountability in the planning, design, engineering, construction, and financing of transportation projects. These provisions continue efforts to expedite project delivery through better

[27] Federal-aid Highway Risk-Based Asset Management Plan Rule for the National Highway System (NHS) [RIN 2125–AF57].

[28] *See* 23 CFR 450.104.

[29] *See* 23 CFR 450.104.

[30] *See* 23 U.S.C. 135(m) and 49 U.S.C. 5304(l).

[31] 23 U.S.C. 134(d) and 49 U.S.C. 5303(d).

[32] 23 U.S.C. 134(i)(4) and 49 U.S.C. 5303(i)(4).

[33] FHWA and FTA have developed resources on scenario planning such as case studies and a Guidebook that are available at: *https://www.fhwa.dot.gov/planning/scenario_and_visualization/scenario_planning.* DOT has incorporated climate change scenarios, sustainability, and resilience into best practices documents DOT shares with the States and MPOs. Examples include the Cape Cod and the New Mexico climate scenario planning projects case studies that are available at: *www.volpe.dot.gov/interagencypilotproject.html* and *www.volpe.dot.gov/nmscenarioplanning.*

coordination between the transportation planning process and the environmental review process pursuant to the National Environmental Policy Act.[34]

The MAP–21 creates a new statutory framework for the optional development of programmatic mitigation plans as part of the planning process for use during the environmental review process.[35] Use of these plans can expedite project development because the plans provide opportunities for early consideration of environmental resources at a statewide, regional, or corridor level and identify options for mitigating impacts to environmental resources. Prior to the passage of MAP–21, States and MPOs could develop programmatic environmental mitigation plans as part of the statewide metropolitan transportation planning processes.[36] These new provisions would create a regulatory framework for States' and MPOs' possible development of programmatic environmental plans, including the scope, contents, and process for developing these plans. The proposed new §§ 450.214 and 450.320 would provide guidance on the use of the programmatic mitigation plan during the project development and environmental review process, as described more fully in the section-by-section discussion.

IV. Section-by-Section Discussion

The FHWA and FTA have drafted the section-by-section discussion for the statewide and nonmetropolitan planning sections and the metropolitan planning sections so those sections are self-contained sections. Although this approach may seem repetitive, it will enable stakeholders to review the sections that are relevant to them while minimizing references to other sections.

Sections or paragraphs that would be unchanged under this proposal or where the only changes would be in numbering are not identified in this discussion. In addition, references to the statewide transportation improvement program, metropolitan planning organizations, the Clean Air Act, and others may have been changed to the appropriate acronym. Minor and nonsubstantive changes in capitalizations, changing certain numbers from words to numerals, changes to citation format and order, adding statutory citations to some Clean Air Act references, updates to renumbered cross-references to other sections within part 450, updates to statutory references, and changes from ''USDOT'' to ''DOT'' have also been made throughout the proposed regulations without further discussion. In addition, some minor, nonsubstantive grammatical changes were made to provide clarity, including several changes throughout the regulatory text from the passive voice to the active voice without changing the meaning. The docket contains a redline version of the regulatory text showing the differences between the existing regulatory text for 23 CFR part 450 and the proposed regulatory text.

Subpart A—Transportation Planning and Programming Definitions

Section 450.104 Definitions

Existing § 450.104 would be retained, with proposed changes to terms and definitions, as follows.

''Alternatives analysis'' would be removed consistent with MAP–21 changes to FTA's Fixed Guideway Capital Investment Grant Program (49 U.S.C. 5309), which eliminated the requirement to undertake an alternatives analysis.

''Amendment'' would be updated to more accurately reflect the relationship of the Clean Air Act's transportation conformity requirements to the planning process, specifically, to clarify that a conformity determination is not a criterion for determining the need for an amendment in nonattainment and maintenance areas. In addition, the phrase ''changing the number of stations in the case of fixed guideway transit projects'' would be added to the list of examples of major changes in design concept or design scope.

''Asset management'' would be a new definition that would be identical to the definition in MAP–21 Section 1103 (23 U.S.C. 101(a)(2)).

''Committed funds'' would be updated to reflect changes to FTA terminology resulting from MAP–21 Section 20008 (49 U.S.C. 5309(h)(7)). Specifically, ''Project Grant Agreement'' would become ''Expedited Grant Agreement.''

''Conformity'' would be changed to add ''subpart A'' after the reference to ''40 CFR part 93'' to be more specific regarding the citation for the transportation conformity regulations. In addition, ''transportation conformity rule'' would be changed to ''transportation conformity regulations'' for clarity. Both of these changes are made throughout the proposed regulatory text where appropriate; please see the redline version of the regulatory text included in the docket for all instances. The phrase ''or any required interim emission reductions or other milestones in any area'' is added to the end of the second sentence of the definition to conform with the language in section 176(c)(1)(A)(iii) of the Clean Air Act, as amended (42 U.S.C. 7401 et seq.).

''Congestion management process'' would be changed to add the phrase ''travel demand reduction and'' as part of the definition to make it consistent with the long-standing statutory definition in 23 U.S.C. 134(k)(3)(A).

''Consideration'' would be updated to include the word ''consequences'' as an item to take into account.

''Designated recipient'' would be updated to conform to the statutory definition, now in 49 U.S.C. 5302(4)(B)—''State regional authority'' would be changed to ''State or regional authority.'' Changes resulting from MAP–21 would include: deleting reference to 49 U.S.C. 5306, changing ''chief executive officer'' to Governor, and replacing ''transportation management areas (TMAs) identified under 49 U.S.C. 5303'' with ''urbanized areas of 200,000 or more in population.'' See 49 U.S.C. 5302(4)(A).

''Environmental mitigation activities'' would be updated to provide a more readable, streamlined definition for environmental mitigation activities without changing the substance of the definition. The proposed definition would remove reference to ''activities'' in the list of activities because it is duplicative. It would remove the phrase ''compensate for (by replacing or providing substitute resources)'' and replace it with ''rectify, reduce, or eliminate'' because any compensation would typically occur in project development, not in planning. It would remove the phrase ''or disruption of elements'' of the plan because it is unnecessary. It changes ''human and natural environment'' to ''environmental resources'' because it is more specific to state that environmental mitigation would address avoiding or minimizing potential impacts to specific environmental impacts during planning. It also would remove the last two sentences of the definition, which further expound on the definition of human and natural environment, and describe the regional nature of environmental mitigation activities. These sentences were removed because FHWA and FTA did not want States and MPOs to limit mitigation under consideration to only the listed examples as there might be other areas where mitigation could be considered.

''Expedited Grant Agreement (EGA)'' would be a new definition added to

[34] 42 U.S.C. 4321, et seq.

[35] See 23 U.S.C. 169 (MAP–21 Section 1311).

[36] See23 U.S.C. 134(i)(2)(D) and 135(f)(4); 49 U.S.C. 5303(i)(2)(B) and 5304(f)(4).

reflect a new term used in MAP–21. An EGA means a contract that defines the scope, the Federal financial contribution, and other terms and conditions of a Small Starts project, in accordance with 49 U.S.C. 5309(h)(7).

''Freight shippers'' would be revised to broaden the definition to include any entity that routinely transports cargo from one location to another by providers of freight transportation services or by their own operations, involving one or more travel modes. The FHWA and FTA believe the existing definition is too narrow because it is limited to ''any business that routinely transports its products from one location to another.'' The proposed revised definition for ''freight shippers'' would be expanded to mean ''any entity that routinely transports cargo from one location to another.'' The term ''entity'' would be used in the revised definition to mean any entity that is shipping cargo, and it would replace the term ''business,'' which was used in the old definition, because it is too limited. The term ''products'' as used in the existing definition would be changed to ''cargo'' because ''products'' is limited to ''products'' resulting from ''business'' while ''cargo'' more widely considers movement of other goods in addition to ''products.'' ''Vehicle fleet'' would be changed to ''involving one or more travel modes'' to reflect the fact that that there may be more than one travel mode involved in shipping freight (e.g., freight movement between trucks and rail at an intermodal facility).

''Highway Safety Improvement Program'' (HSIP) would be a new definition. As discussed in the major revisions discussion above, MAP–21's shift to performance-based approach to transportation planning includes several elements. One of those elements is the requirement to integrate the goals, objectives, performance measures, and targets from other performance-based plans and processes into the statewide and metropolitan transportation planning processes. The HSIP would be one of those processes. The new definition would be taken from the proposed 23 CFR 924.3. See the updates to the HSIP regulations [RIN 2125–AF56].

''Illustrative project'' would be revised to remove a reference to ''(but is not required to)'' after the word ''may'' because it is redundant.

''Local official'' would be added as a new definition because of the new emphasis under MAP–21 on nonmetropolitan transportation planning. In particular, MAP–21 requires States to work more closely with nonmetropolitan local officials. A local official would be defined as an elected or appointed official of general-purpose local government with responsibility for transportation.

''Major modes of transportation'' is a proposed new definition. The FHWA and FTA propose to add this definition to help clarify the use of the term ''major modes of transportation'' as it relates to the changes in structure to each MPO that serves a TMA. Although each MPO that serves a TMA will continue to consist of officials, including ''officials of public agencies that administer or operate major modes of transportation in the metropolitan area,'' MAP–21 adds to the end of this phrase ''representation by providers of public transportation.'' Major modes of transportation would mean those forms of transportation administered, managed, owned, or operated by public agencies or authorities that provide services to the public for the movement of people and goods, or as operated by the private sector on behalf of a public, agency-owned facility.

''Metropolitan Planning Agreement'' is a proposed new definition that would mean a written agreement between the MPO, the State(s), and the providers of public transportation serving the metropolitan planning area that describes how they will work cooperatively to meet their mutual responsibilities in carrying out the metropolitan transportation planning process, including performance-based planning. Even though Metropolitan Planning Agreements are currently provided for in § 450.314, FHWA and FTA propose this definition because this agreement plays an important role in transitioning to a performance-driven, outcome-based program by helping to identify how MPOs, States, and providers of public transportation would cooperatively implement performance-based planning.

''Non-metropolitan local officials'' would be revised to change ''non-metropolitan'' to ''nonmetropolitan.'' This change would be made throughout the proposed regulatory text; to see all the instances please refer to the redline in the docket as referenced above.

''Obligated projects'' would be updated to clarify that funds may have been obligated in the preceding program year or the current year.

''Performance measures,'' ''performance metrics,'' and ''performance targets'' would be new definitions added as a result of the new performance-based planning provisions in MAP–21, including sections 1203, 20019, and 20021 (23 U.S.C. 150 and 49 U.S.C. 5326 and 5329). These definitions would refer to the definitions developed for these terms during the rulemakings to implement the referenced MAP–21 provisions. See Federal-aid Highway Performance Measure Rules [RIN 2125–AF49, 2125–AF53, 2125–AF54], Transit Asset Management Rule [RIN 2132–AB07], and National and Public Transportation Safety Plans Rule [RIN 2132–AB20].

''Project construction grant agreement'' would be deleted because MAP–21 renamed it ''Expedited Grant Agreement'' (which is included as a new definition), in accordance with 49 U.S.C. 5309(h)(7).

''Provider of freight transportation services'' would be modified so that ''goods'' is changed to ''cargo'' to be consistent with the definition of ''freight shippers.''

''Public transportation agency safety plan'' is a proposed new definition and would mean a comprehensive plan established by a State or recipient of funds under Title 49, chapter 53. This definition reflects MAP–21's new requirement that the statewide and nonmetropolitan transportation planning process integrate the goals, objectives, performance measures, and targets from other performance-based plans. The public transportation agency safety plan would be one of those plans.

''Public transportation operator'' would be modified to provide clarification. The phrase ''public entity'' in the existing definition would be changed to ''public entity or government-approved authority.'' This would reflect that the public transportation operator may be: (1) A public entity, or (2) a governmental-approved authority that is not a public entity. Also, the definition is modified so that the list of entities that are not considered to be ''public transportation operators'' would be expanded to include a conveyance that provides ''sightseeing'' or ''certain types of shuttle service.''

''Regional Transportation Planning Organization (RTPO)'' would be a new definition resulting from MAP–21's emphasis on nonmetropolitan transportation planning and the creation of a new optional statutory framework for these organizations. The definition would be taken directly from 23 U.S.C. 135(m)(1) and (2) and would mean a policy board of nonmetropolitan local officials or their designees created to carry out the regional transportation planning process.

''Regionally significant project'' would be modified by removing the word ''significant'' from the last sentence of the definition. This change would eliminate an unintended redundancy in the existing regulation,

as all fixed guideway transit facilities that offer an alternative to regional highway travel are regionally significant projects. The proposed change would not change the meaning of the term ''Regionally significant project.''

''Scenario planning'' would be a new definition added to reflect MAP–21's codification of an existing best practice in the metropolitan transportation planning process. Scenario planning would mean a planning process that evaluates the effects of alternative policies, plans and/or programs on the future of a community or region. The MPOs may use scenario planning as they develop the transportation plan. The FHWA and FTA have based this definition on language in 23 U.S.C. 134(i)(4)(A)–(C).

''Strategic Highway Safety Plan'' would be retained and updated, consistent with 23 U.S.C. 148, as amended by MAP–21. In addition to minor administrative changes, FHWA and FTA propose to change ''plan'' to ''comprehensive multidisciplinary plan, based on safety data.''

''Transit Asset Management Plan'' and ''Transit Asset Management System'' would be proposed new definitions, added as a result of the new performance-based planning provisions in MAP–21, to integrate performance elements of other plans (including the new transit asset management plan) into the transportation planning process. These definitions would refer to the definitions developed for these terms during the rulemaking to implement the new MAP–21 transit asset management provisions (49 U.S.C. 5326). See Transit Asset Management Rule [RIN 2132–AB07].

''Transportation Contol Measure'' would be changed to add the phrase ''including a substitute or additional TCM that is incorporated into the applicable SIP through the process established in CAA section 176(c)(8)'' as part of the definition. This change is being proposed for better consistency with the 2005 amendments to section 176 of the Clean Air Act (codified at 42 U.S.C. 7506(c)), enacted in section 6011(d) of the Safe, Accountable, Flexible, Efficient Transportation Equity Act: A Legacy for Users (SAFETEA–LU), Pub. L. 109–59, 119 Stat. 1144 (2005).

''Visualization techniques'' would be changed to add language to clarify the types of methods that can be used (''GIS or web-based surveys, inventories'') as well as the types of facilities and resources that may be included (''identifying features such as roadway rights of way, transit, intermodal, and non-motorized transportation facilities, historic and cultural resources, natural resources, and environmentally sensitive areas''). This list is illustrative of the types of items that can be included and is not an exclusive list.

Subpart B—Statewide and Nonmetropolitan Transportation Planning and Programming

The title of Subpart B would be changed from ''Statewide Transportation Planning and Programming'' to ''Statewide and Nonmetropolitan Transportation Planning'' to reflect statutory changes. The addition of ''Nonmetropolitan'' to the title epitomizes MAP–21's new emphasis on the importance of nonmetropolitan transportation planning.

Section 450.200 Purpose

The statement of purpose in § 450.200 would be revised to make two changes to reflect the MAP–21 shift to a performance-based approach to statewide transportation planning. The two changes include adding reference to the new 23 U.S.C. 150 (the new Federal-aid highway program provision requiring the Secretary to establish performance measures and standards) and adding ''performance-based'' before the reference to the multimodal transportation planning process.

Section 450.202 Applicability

Existing § 450.202 would be modified to add RTPOs as one of the entities responsible for satisfying the statewide transportation planning provisions. One of MAP–21's major changes is the codification of a framework States may use to establish and designate RTPOs.

Section 450.206 Scope of the Statewide Transportation and Nonmetropolitan Planning Process

Section 450.206 describes the scope of the statewide and nonmetropolitan transportation planning process. The FHWA and FTA propose to revise this section to incorporate MAP–21's critical changes to the planning process requiring States, MPOs, and providers of public transportation to link investment priorities (the transportation improvement program of projects) to achieving performance targets that will be established to reflect performance measures in key areas. Several key elements of a performance management approach would be included in the proposed revisions to this regulation (see paragraph (c)): establishment of performance targets, coordination of performance targets, integration of elements of other performance-based plans, and consideration in the development of investment priorities. One other significant change is the inclusion of the word ''nonmetropolitan'' in the proposed heading reflecting the increased emphasis on nonmetropolitan transportation planning. These major proposed changes, as well as other minor proposed changes, are further described below.

The heading of existing § 450.206 would be changed to add ''and Nonmetropolitan'' to be consistent with MAP–21 section 1202's change to the heading of 23 U.S.C. 135.

Section 450.206(b) would be revised to add ''(including Section 4(f) properties as defined in 23 CFR 774.17)'' after ''human and natural environment'' to clarify that Section 4(f) properties should be included in considerations of human and natural environment for purposes of this section. This change also reflects the 2008 revision to the joint FHWA and FTA Section 4(f) regulations, which are now contained in 23 CFR 774 and include a definition for ''Section 4(f) Property''.

The proposed new § 450.206(c) would describe the new performance-based approach to transportation planning and programming under MAP–21 and set up the foundation for such an approach. As a fundamental principle, proposed new paragraph (c)(1) would require States to use a performance-based approach to transportation decisionmaking to support national goals and purposes.

Proposed new paragraph (c)(2) starts building the foundational steps to this performance-based approach by requiring States to establish performance targets for the Federal-aid highway program based on measures that FHWA will develop in separate rulemakings (Federal-aid Highway Performance Measure Rules [RIN 2125–AF49, 2125–AF53, 2125–AF54]). These separate rulemakings will contain detailed requirements for establishing targets. As part of the planning process, States would be required when selecting and establishing performance targets in proposed paragraph (c)(2), to coordinate those targets to ensure consistency, to the maximum extent practicable, with the MPOs. In addition, States would also coordinate the establishment of performance targets with affected Federal Lands Management Agencies. See 23 U.S.C. 135(d)(2).

Proposed new paragraph (c)(3) relates to public transportation performance targets and would require States to coordinate the selection of public transportation targets with providers of public transportation. These targets will be based on measures and standards that will be developed by FTA in

separate rulemakings (Transit Asset Management Rule [RIN 2132–AB07], and National and Public Transportation Safety Plans Rule [RIN 2132–AB20]). Paragraph (c)(3) provides that in areas not represented by MPOs, States would be required to coordinate the selection of these public transportation performance targets to the maximum extent practicable with providers of public transportation, to ensure consistency. See 49 U.S.C. 5304(d)(2).

In paragraphs (c)(3) and (c)(4), the language in section 23 U.S.C. 135(d)(2)(B)(ii) and 49 U.S.C. 5304(d)(2)(B)(ii) that refers to ''providers of public transportation'' in ''urbanized areas . . . not represented by a metropolitan planning organization'' would not be carried forward because by statute, all ''urbanized areas'' continue to be represented by an MPO (23 U.S.C. 134(d)(1) and 49 U.S.C. 5303(d)(1)). Because of this discrepancy, FHWA and FTA propose the following interpretation. Instead of using ''urbanized areas,'' FHWA and FTA would instead use the phrase ''areas not represented by a metropolitan planning organization'' because States would need to coordinate with providers of public transportation in these areas not represented by a MPO to select performance targets with respect to 49 U.S.C. 5326(c) and 49 U.S.C. 5329(d).

Proposed paragraph (c)(4) continues to build the foundational steps by requiring States to integrate into the statewide transportation planning process the elements (goals, objectives, performance measures, and targets) in other State transportation plans and transportation processes, as well as any plans developed by providers of transportation in areas not represented by an MPO. Examples of other performance-based plans and processes include the HSIP, the SHSP, the NHS Asset Management Plan, the State Freight Plan (if the State chooses to develop one), the transit asset management plan, and the public transportation agency safety plan.

The FHWA and FTA propose a new paragraph (c)(5) that is a critical piece of the foundation for a performance-based management approach. This paragraph would require States to consider the performance measures and its performance targets when developing its planning documents and making investment priorities. This would ensure that these decisions are transparent. See 23 U.S.C. 135(d)(2)(D) and 49 U.S.C. 5303(d)(2)(D).

Existing § 450.206(c) would become § 450.206(d) and be revised to include that the performance-based planning aspects of the statewide transportation planning process, as described above in proposed new paragraph (c), are not subject to review by any court. In addition, ''reviewable'' is changed to ''subject to review.'' These changes are consistent with the MAP–21 changes to 23 U.S.C. 135(d)(3) and 49 U.S.C. 5304(d)(3).

Existing § 450.206(d) would become 450.206(e) and the second sentence would be revised. The reference to 23 U.S.C. 104(b)(1) and (3) and 105 becomes 23 U.S.C. 104(b)(2) because MAP–21 section 1105 changed references to the 23 U.S.C. 104 apportioned programs, and MAP–21 section 1519(b) repealed 23 U.S.C. 105. Now, the Surface Transportation Program apportionment is under 23 U.S.C. 104(b)(2). Transportation planning, previously an eligible activity under the NHS program funds in SAFETEA–LU, is no longer eligible for the National Highway Performance Program (NHPP), which replaced the NHS program. References to 49 U.S.C. 5310 and 5311 would be added to clarify existing authorities. In addition, ''for statewide transportation planning'' would be added to the end of the second sentence to clarify eligibility of statewide planning for these funds.

Section 450.208 Coordination of Planning Process Activities

Section 450.208 generally describes how States must work with other agencies when conducting the statewide and nonmetropolitan transportation planning process. The revisions to this section propose changes in two areas. First, there is a change to reflect the new emphasis under MAP–21 on nonmetropolitan transportation planning. Second, there are changes to reflect an aspect of the new performance-based approach—the integration of elements of other performance-based plans into the planning process. These proposed changes, as well as other minor proposed changes, are further described below.

Consistent with MAP–21's new emphasis on nonmetropolitan transportation planning, this section proposes two changes. First, existing § 450.208(a)(4) would be revised to note the change in language from ''consider the concerns'' to ''cooperate with affected'' in accordance with changes to 23 U.S.C. 135(e)(1) and 49 U.S.C. 5303(e)(1). Second, this proposed section would now include RTPOs as an entity States would cooperate with, if they choose to designate and establish RTPOs.

The MAP–21 now requires the integration of other performance-based plans into the statewide transportation planning process under 23 U.S.C. 135(d)(2) and 49 U.S.C. 5304(d)(2). Current regulations encourage consideration of asset management principles during the planning process. With the new MAP–21 requirements to develop and implement asset management plans (See Federal-aid Highway Risk-Based Asset Management Plan Rule for the NHS [RIN 2125–AF57], Transit Asset Management Rule [RIN 2132–AB07], and National and Public Transportation Safety Plans Rule [RIN 2132–AB20]), it is even more important for States to consider these plans during the transportation planning process. The FHWA and FTA are proposing revisions to § 450.208(e) and a new § 450.208(f) to ensure that these asset management principles and techniques are part of the planning process. In particular, revised paragraph (e) would now require that States apply asset management principals and techniques to the statewide transportation planning process consistent with the Asset Management Plan for the NHS, the Transit Asset Management Plan, and the Public Transportation Agency Safety Plan. The new paragraph (f) covers the non-NHS highways and proposes that States ''may'' apply asset management principles to the transportation planning and programming processes.

Proposed new paragraph (g) includes the MAP–21 performance-related requirement that States integrate goals, objectives, performance measures, and targets of other performance-based plans into their statewide transportation planning process. This paragraph identifies the other performance-based plans processes States would integrate, including the Asset Management Plan for the NHS, the SHSP, the Public Transportation Agency Safety Plan, the Transit Asset Management Plan, the State Freight Plan (if one exists, as it is optional), as appropriate, and other State transportation plans and processes required as part of a performance-based program.

Existing § 450.208(g) would become § 450.208(i) and is revised to delete references to 49 U.S.C. 5316 and 5317 because MAP–21 repealed these sections. This change was made throughout this proposed regulation; please see the redline version of the regulatory text included in the docket for further information.

Existing § 450.208(h) would be deleted and the reference to the SHSP would be moved to § 450.208(g)(2). The reference to SHSP would be moved because of the new MAP–21 requirements for States to integrate the

elements of other performance-based plans and processes (including the SHSP) into the statewide transportation planning process.

Section 450.210 Interested Parties, Public Involvement, and Consultation

Section 450.210 requires States to involve members of the public and nonmetropolitan local officials in the planning process that produces the long-range statewide transportation plan and STIP. The proposed § 450.210 would retain the existing process for public involvement and would, along with minor changes: (1) Require States to cooperate, rather than consult, with nonmetropolitan local officials in development of the long-range statewide transportation plan and STIP, and (2) add a new process for States that elect to establish and designate RTPOs to perform planning in nonmetropolitan areas. These proposed changes reflect MAP–21's theme of increased cooperation between States and nonmetropolitan areas in transportation planning. These changes, and other minor changes, are described below.

Existing § 450.210(a)(1)(i) would be revised so that the word ''citizens'' would be replaced with the word ''individuals'' to avoid confusion of the term ''citizens'' with U.S. citizenship. In proposed paragraph (a)(1)(iii), the words ''but not limited to'' following ''including'' would be removed because they are unnecessary; use of ''including'' or ''include'' generally precedes a nonexclusive list. Both of these changes would be made throughout the proposed regulatory text; to see all the instances please refer to the redline version of the regulatory text included in the docket as referenced above. Examples of affected public agencies to which a State might provide an opportunity to be involved in the statewide planning process under § 450.210(a)(1)(i) include agencies with responsibility for economic development, human and natural resources, environmental protection, sustainability, mitigation, adaptation, climate, and air quality.

Section 450.210(b) requires States to provide for nonmetropolitan local official participation in the development of the long-range statewide transportation plan and STIP. Paragraph (b) would retain the current requirement for States to have a documented process for the participation of nonmetropolitan local officials and to review and solicit comments on the process at least once every 5 years. The current regulation requires this participation to be consultative in nature, which means that States are required to consider the views of nonmetropolitan local officials. Consistent with MAP–21's amendments, the proposed regulation would require States to cooperate with nonmetropolitan local officials, meaning that they would be required to work together to achieve a common outcome. The proposed change from consultation to cooperation would require States to work more closely with nonmetropolitan local officials in the development of the long-range statewide transportation plan and STIP. Section 450.210(b)(1) also would be revised to remove the reference to ''(as of February 24, 2006)'' because the requirement has existed for long enough that that date is no longer meaningful.

Proposed § 450.210(c), which concerns areas of States under the jurisdiction of an Indian tribal government, would replace ''Federal land management agencies'' with the ''Department of the Interior'' as the entity with which States must consult when forming the long-range statewide transportation plan and STIP for such area. This change would be made because the Department of the Interior, not the Federal land management agencies, is the Federal agency with responsibility for managing Indian tribal matters. Paragraph (c) would also be revised to insert the word ''the'' in the phrase ''Secretary of the Interior'' to correct that official's title.

Proposed § 450.210(d) would be added to provide a process to establish and designate an RTPO and describe the structure and primary functions of an RTPO. To support States' cooperation with nonmetropolitan areas, MAP–21 introduces an optional formal process for States to establish and designate RTPOs to carry out the transportation planning process in nonmetropolitan areas. If established, a State would cooperate with nonmetropolitan local officials through the RTPO. The establishment and designation of an RTPO is optional; if a State chooses not to establish RTPOs under the proposed rule, the State itself would carry out all elements of the statewide and nonmetropolitan planning process, as is currently required, and would cooperate directly with affected nonmetropolitan local officials.

The MAP–21 provides that ''States'' have the authority to establish and designate an RTPO. Proposed paragraph (d) would clarify that this authority resides in the Governor or the Governor's designee. This clarification is proposed because the Governor is the chief executive of a State. Proposed paragraph (d) would require existing regional planning organizations to go through the formal establishment and designation process required by this proposed section to become an RTPO. This is proposed because RTPOs have a certain structure and statutorily specified duties, as described below, and MAP–21 requires States to cooperate with RTPOs when they are present.

The proposed paragraphs (d)(1) and (d)(2), which closely track statutory language, would describe the structure of an RTPO. Because an RTPO would conduct planning for a nonmetropolitan region, an RTPO would be a multijurisdictional organization composed of volunteer nonmetropolitan local officials or their designees, and volunteer representatives of local transportation systems. An RTPO also would be required to establish a policy committee and a fiscal and administrative agent to provide professional planning, management, and administrative support. The policy committee would be composed mostly of nonmetropolitan local officials, with additional representatives, as appropriate, from the State, private business, transportation service providers, economic development practitioners, and the public in the region.

Proposed paragraph (d)(3), which also closely tracks statutory language, would describe the duties of an RTPO. The duties of an RTPO would include developing a regional long-range multimodal transportation plan and a regional TIP, providing a forum for public participation in the statewide and regional transportation planning process, and conducting other activities to support and enhance the statewide planning process. By conducting nonmetropolitan planning as local organizations, RTPOs would enhance the planning, coordination, and implementation of the long-range statewide transportation plans and STIPs, with an emphasis on addressing the needs of the nonmetropolitan areas of the State. Nothing in paragraph (d) would prevent an RTPO from conducting other transportation planning activities in addition to those required under this paragraph.

Section 450.212 Transportation Planning Studies and Project Development

Current § 450.212 and Appendix A provide the context and the means for using transportation planning information and decisions in the environmental review process. Those provisions reflect long-standing practice for highway and transit projects pursuant to various sections of the Council on Environmental Quality

regulations that implement NEPA at 40 CFR parts 1500–1508 and case law.[37] The practice of using information and decisions developed during transportation planning provides opportunities for expediting project delivery, generating cost savings by reducing duplication of effort, and improving environmental outcomes through the planning of projects in an environmentally sensitive manner. The MAP–21 section 1310 broadens this practice by creating 23 U.S.C. 168, which provides additional statutory authority for linking planning and the environmental review process. The FHWA and FTA propose to retain § 450.212 without revision. The agencies will address implementation of section 1310 and any needed updates to provisions on pre-MAP–21integration authorities through separate rulemaking or guidance.

The current Appendix A of 23 CFR part 450, referenced in existing § 450.212, provides detailed information on how to evaluate whether material, information, decisions, or analyses developed during the transportation planning process could be used during the environmental review process of a project (i.e., project development). The FHWA and FTA derived the concepts in Appendix A from NEPA regulations, guidance, and case law. The Agencies propose to retain Appendix A.

Section 450.214 Development of Programmatic Mitigation Plans

Proposed § 450.214 is new and implements a new statutory provision at 23 U.S.C. 169, created by MAP–21 Section 1311, that provides a statutory framework for the optional development of programmatic mitigation plans as part of the planning process for use during the subsequent environmental review process. See 23 U.S.C. 168(c)(1)(E). This new proposed regulatory section is intended to clarify the possible scope, scale, and contents of programmatic mitigation plans developed pursuant to 23 U.S.C. 169 as well as the process used to develop them, and subsequently use them, in the environmental review process. For FHWA and FTA, programmatic mitigation plans are plans that address the potential environmental impacts of future transportation projects.

A State can develop a programmatic mitigation plan at the statewide, regional, local jurisdiction, ecosystem, watershed or similar scale, and can normally develop a plan with an aim toward protecting, preserving, rehabilitating, or creating environmental resources, or mitigating possible harm to environmental resources due to future transportation projects. Examples of resources that the plan might identify include wetlands, streams, rivers, stormwater, parklands, cultural resources, historic resources, farmlands, and threatened and endangered species. The plan may inventory existing or planned wetland, stream, habitat, species, and/or other environmental resource mitigation sites or areas, and resource areas of high value or concern, as well as adopt or develop standard measures or operating procedures for mitigating certain types of impacts. The plan may include development of mitigation or conservation banks, in-lieu-fee programs, or consolidated mitigation areas. The plan may be used to develop mitigation strategies based on an analysis of greenhouse gas emissions and vulnerability to climate change impacts, or an energy analysis. In developing a programmatic mitigation plan as part of the statewide transportation planning process (or the metropolitan transportation planning process under § 450.320 below), a State (or MPO) would need to consult with each agency with jurisdiction over the environmental resources considered in the plan. The consultation may address considerations such as the applicability of the plan to meet multiple regulatory requirements and identification of steps necessary for implementation of the plan. The State (or MPO), must make the plan available for review and comment by the public and the applicable environmental resource agencies. A programmatic approach to environmental mitigation has the potential to streamline the project development process and improve environmental outcomes through early identification of potential environmental impacts and identification of potential avoidance or mitigation opportunities. The degree to which programmatic mitigation strategies are useful later in the project development process depends on the extent of consultation, as well as the level of detail that is developed during planning with the agency of jurisdiction over a particular resource that will later consider that mitigation for purposes of satisfying permit requirements. Thus, FHWA and FTA suggest that such consultation take place during planning, and agreement reached as much as feasible to maximize the extent to which programmatic mitigation can be used. The FHWA and FTA strongly encourage flexibility within the constraints of existing regulations with respect to permitting in support of better environmental outcomes.

Section 450.216 Development and Content of the Long-Range Statewide Transportation Plan

Existing § 450.214 would become § 450.216. It would be revised to codify in regulation MAP–21's provision that each State should implement a performance-based approach in the development of its long-range statewide transportation plan. The statewide transportation plan is a multimodal transportation plan addressing at least a 20-year planning horizon for all areas of the State. As part of the proposed performance-based changes to this section, each State should describe in its long-range statewide transportation plan the performance measures and performance targets it used to assess the performance of its transportation system. The State's long-range plan should include a system performance report that contains the State's evaluation of the condition and performance of the transportation system with respect to performance targets established by the State to address the performance measures identified under 23 U.S.C. 150(c), and 49 U.S.C. 5326(c) and 49 U.S.C. 5329(d). The State should also report on the progress achieved by the MPOs in meeting their performance targets in comparison with the system performance recorded in previous reports. See 23 U.S.C. 135(f)(7) and 49 U.S.C. 5304(f)(7). This section adds the new emphasis on nonmetropolitan planning and requires a State to provide nonmetropolitan local officials or RTPOs the opportunity to participate in the development and update of the plan. Finally, the section also encourages the State to assess the appropriateness of innovative finance techniques in its development of financing strategies as part of the financial plan component of the long-range statewide transportation plan. It also encourages a State, when assessing its capital investments as part of the long-range statewide transportation plan, to consider the financial plans and investment strategies from the State Asset Management Plan for the NHS, as defined in 23 U.S.C. 119(e), and the investment priorities of the public

[37] See *Carmel-by-the-Sea* v. *U.S. DOT,* 123 F.3d 1142 (9th Cir. 1997) (finding that the EIS appropriately relied on growth plans developed during the planning process for the EIS discussion of the project's growth inducing effects); *North Buckhead Civic Association* v. *Skinner,* 903 F.2d 1533 (11th Cir. 1990) (validating the use of a purpose and need statement under NEPA that was developed through the transportation planning process); *Sierra Club* v. *U.S. DOT,* 310 F. Supp. 2d 1168 (D. Nevada 2004) (finding that reliance during the NEPA process on forecasts and modeling efforts developed in the planning process was reasonable).

transit asset management plan, as discussed in 49 U.S.C. 5326. This will help ensure that key elements of the asset management plans are considered as part of the investment decisionmaking process.

Consistent with existing § 450.214, proposed § 450.216 would maintain the opportunity for the long-range statewide transportation plan to be comprised of policies and/or strategies, not necessarily specific projects, over the minimum 20-year forecast period. In addition, it would retain State discretion to identify a periodic schedule for updating the long-range statewide transportation plan and to revise the plan as necessary.

Existing § 450.214(c) would become proposed § 450.216(c) and be revised to add ''as appropriate'' after the list of items that the plan shall reference, summarize, or contain because some items might not be relevant. Examples of plans that the plan might reference include energy plans, or plans that address resilience to current and future conditions. Such conditions could include severe weather events and changes in weather patterns.

Existing § 450.214(d) would become proposed § 450.216(d) and be revised to reflect that States should integrate into the statewide transportation plan the priorities, goals, countermeasures, strategies, or projects contained in the HSIP, including the SHSP, as required under 23 U.S.C. 148, and the Public Transportation Agency Safety Plan required under 49 U.S.C. 5329, or an Interim Agency Safety Plan in accordance with 49 CFR part 659, as in effect until completion of the Public Transportation Agency Safety Plan.

Proposed § 450.216(f) would be added to reflect a key provision added by MAP–21 to 23 U.S.C. 135(f)(7) and 49 U.S.C. 5304(f)(7) regarding a performance driven, outcome-based statewide transportation planning process and closely follows the statutory text. Specifically, proposed paragraph (f) states that the statewide transportation plan should be performance-based and should include a description of the performance measures and targets used in assessing the performance of the transportation system. The statewide plan should also include a system performance report and subsequent updates evaluating the performance of the transportation system with respect to the performance targets, including progress achieved by the MPO(s) in meeting the performance targets in comparison with system performance recorded in previous reports.

Consistent with MAP–21's emphasis on nonmetropolitan planning discussed above, and requirements for States to work more closely with nonmetropolitan local officials and, if applicable, RTPOs, existing § 450.214(g) would become proposed § 450.216(h), ''consultation'' with ''non-metropolitan'' officials would become ''cooperation'' with ''nonmetropolitan'' officials, and provision for cooperation with RTPOs, if applicable, would be added. See 23 U.S.C. 135(f)(2)(B) and 49 U.S.C. 5304(f)(2)(B). State DOTs would retain final decisionmaking authority for development of the long range statewide transportation plan and the statewide transportation improvement program.

Existing § 450.214(j) would become proposed § 450.216(k) and be revised to add regional and local entities to the list of entities States must consult when developing the discussion on potential environmental mitigation strategies or the long-range statewide transportation plan.

Existing § 450.214(k) would become proposed § 450.216(l) and be updated. Consistent with MAP–21's new emphasis on nonmetropolitan transportation planning, this section proposes that the State provide nonmetropolitan local elected officials, or the RTPOs if applicable, the opportunity to participate in the development and update of the long-range statewide transportation plan. This change results from changes in MAP–21 section 1202 to 23 U.S.C. 135(f)(2)(B) and 49 U.S.C. 5304(f)(2)(B). In addition, proposed paragraph (l)(2) would remove the reference to ''to the maximum extent practicable'' to be consistent with the statutory text (23 U.S.C. 135(f)(3) and 49 U.S.C. 5304(f)(3)). Where applicable, ''to the maximum extent practicable'' is included in the appropriate provisions in the referenced § 450.210(a).

Existing § 450.214(l) would become proposed § 450.216(m) and be updated to remove two references to ''(but is not required to)'' after the word ''may'' because it is redundant. A statement would also be added to this section: ''[t]he financial plan may include an assessment of the appropriateness of innovative finance techniques (for example, tolling, pricing, bonding, public private partnerships, or other strategies) as revenue sources.'' This provision would support 23 U.S.C. 106(h)(3)(D), which encourages earlier consideration of innovative finance techniques. Although 23 U.S.C. 106(h)(3)(D) refers to consideration as part of the finance plan for a project, it is also appropriate to consider innovative finance techniques as part of the finance plan for the statewide plan.

New § 450.216(n) is proposed to provide that as the State develops the financial strategies for its long-range statewide transportation plan and assesses its capital investment, it should consider the financial plan and investment strategies from the newly required State asset management plan for the NHS as defined in 23 U.S.C. 119(e) and investment priorities of the newly required public transit asset management plan(s) as discussed in 49 U.S.C. 5326. Information from these newly required plans can inform States in their capital investment decisionmaking process.

Existing § 450.214(g) would become § 450.216(p) and would be revised to add ''for public review'' to clarify that the long-range statewide transportation plan shall be made available for public review, including electronically. This is consistent with a long-standing statutory requirement in 23 U.S.C. 135(f)(3) and 49 U.S.C. 5304(f)(3).

Section 450.218 Development and Content of the Statewide Transportation Improvement Program (STIP)

Existing § 450.216 would become proposed § 450.218. Section 450.218 describes the development and the content of the STIP. The STIP is the prioritized listing of transportation projects covering a period of 4 years that the State develops in cooperation with the MPOs, nonmetropolitan local officials, and, if applicable, RTPOs. The FHWA and FTA approve the STIP. This section would be revised to incorporate MAP–21's new requirements for a performance-based planning and programming process and increased emphasis on nonmetropolitan transportation planning. A significant revision to this section would be the addition of the new performance-based requirement that the STIP would include a description of how the investment priorities in the STIP contribute toward the achievement of the performance targets in the statewide transportation plan. Because the STIP is developed with opportunity for public comment, the new requirement to demonstrate how investment decisions are made adds additional accountability and transparency to the planning process. The establishment of performance targets would also align the STIP in those key areas where targets are established, including safety, state of good repair, congestion and reliability, freight, and emissions. A description of the performance-based changes to this section and other minor proposed changes to this section are as follows.

Existing § 450.216(a) would become § 450.218(a) and be updated to add ''shall'' after ''4 years and'' and include the phrase ''of the State'' after the word ''Governor'' to provide clarification.

Section 450.216(c) would become § 450.218(c) and be updated to reflect the new emphasis on nonmetropolitan transportation planning. Specifically, the proposed regulation would change ''consultation'' with ''non-metropolitan'' officials to ''cooperation'' with ''nonmetropolitan'' officials and would add cooperation with RTPOs, if applicable. These changes reflect MAP–21 revisions to 49 U.S.C. 5304(g)(2)(B)(i). Whereas 49 U.S.C. 5304 is nearly the same as 23 U.S.C. 135, this is one instance where changes to the two statutes were inconsistent. The MAP–21 revision to section 135(g)(2)(B)(i) does not change ''consultation'' to ''cooperation.'' In updating these joint regulations, FHWA and FTA determined that it was appropriate to use ''cooperation,'' rather than ''consultation'' in this paragraph of these joint regulations. To have two different processes—a consultation process for Title 23 actions and a cooperation process for Title 49 actions—is overly burdensome. Using ''cooperation'' is consistent with the comparable changes MAP–21 made to the long-range statewide transportation plan provisions (see proposed § 450.216(h)). Because of the long-standing requirement that the STIP be consistent with the long-range statewide transportation plan, the State should follow a similar coordination process for both of these documents. In addition, as defined for purposes of part 450, ''cooperation'' requires States to work more closely with nonmetropolitan local officials and RTPOs, if applicable, than ''consultation.'' This proposed change is also consistent with the overall MAP–21 approach to increasing the presence of affected nonmetropolitan local officials and regional planning organizations in the statewide planning process.

Existing § 450.216(e) and (g) would become proposed § 450.218(e) and (g), and ''Federal Lands Highway Program'' would be changed to ''Tribal Transportation Program, Federal Lands Transportation Program, and Federal Lands Access Program'' to reflect MAP–21 program changes to 23 U.S.C. 201–204.

Section 450.216(g) would become § 450.218(g) and be updated to reflect MAP–21 changes to programs, phrases, and plans. In particular, ''transportation enhancements'' would become ''transportation alternatives,'' and ''associated transit improvements'' would be added under (g). ''Associated transit improvements'' is FTA's equivalent of FHWA's ''transportation alternatives.'' Reference to SHSP would be changed to HSIP because HSIP is the program that funds safety projects (as opposed to a SHSP), and is more closely associated with the STIP. Under § 450.218(g)(2), 23 U.S.C. 104(f) would become 23 U.S.C. 104(d) and reference to 49 U.S.C. 5339 would be deleted. Paragraph 450.218(g)(4) would be revised to remove references to the ''National Highway System,'' and ''and/or Equity Bonus'' because these programs are not continued under MAP–21 and remove reference to ''[a]t the State's discretion'' as it is repetitive. Because of the creation of FTA's emergency relief funding program, FHWA and FTA want to clarify that § 450.218(g)(5), which indicates that emergency relief projects meeting certain conditions are not required to be included in the STIP, would not apply to resiliency projects funded under 49 U.S.C. 5324. Section 450.218(g)(6) would be revised and reference to ''national planning and research projects funded under 49 U.S.C. 5314'' would be changed to ''[r]esearch development demonstration and deployment projects funded under 49 U.S.C. 5312, and technical assistance and standards development projects funded under 49 U.S.C. 5314.'' This change is proposed because of MAP–21 changes to research programs that separated the programs into two sections and created a distinct technical assistance and standards development program. Section 450.218(g)(8) would be added to reflect that State safety oversight funds awarded under 49 U.S.C. 5329 are not subject to the rule of financial constraint, and therefore State safety oversight programs may, but are not required to, be included in the STIP.

Existing § 450.216(j) would become proposed § 450.218(j) and be updated to add ''subpart A'' after the second reference to ''40 CFR part 93'' to be more specific regarding the citation for the transportation conformity.

Section 450.216(l) would become § 450.218(l) and would be revised to delete ''made'' from the phrase ''reasonably expected to be made available'' for consistency with other terminology. The phrase ''Starting December 11, 2007'' would be removed because this date has passed and the use of year of expenditure dollars for revenue and cost estimates in the STIP continues to be a requirement. Reference to ''(but is not required to)'' after the word ''may'' would be removed because it is redundant.

Section 450.216(m) would become § 450.218(m) and the following provision would be moved to its own section at 450.218(p) for added emphasis: ''The STIP shall include a project, or an identified phase of a project, only if full funding can reasonably be anticipated to be available for the project within the time period contemplated for completion of the project.'' In addition, a more specific statutory citation to the definition of public transportation (''49 U.S.C. 5302'') would replace the more general reference (''49 U.S.C. Chapter 53'').

Consistent with the new requirements to integrate elements of other performance-based plans and processes into the statewide transportation planning process, a new proposed § 450.218(o) would be added to indicate that the STIP should be informed by the financial plan and the investment strategies from the State asset management plan for the NHS and by the public transit asset management plan. See 23 U.S.C. 119(e) and 49 U.S.C. 5326. The financial plan and investment strategies of the State asset management plan for the NHS and the investment strategies of the public transit asset management plan are elements of new performance-based plans required under MAP–21. The FHWA and FTA propose in this section that States consider these elements as part of the investment decisionmaking process to inform the STIP.

The FHWA and FTA propose to incorporate the MAP–21 requirements for a performance-based STIP in proposed new § 450.218(r). See 23 U.S.C. 135(g)(4) and 49 U.S.C. 5304(g)(4). Importantly, proposed paragraph (r) would require the STIP describe how the projects in the STIP would achieve the State performance targets—linking investment priorities to those targets. Because the development of a STIP is a public process, these new requirements help establish accountability and transparency of transportation investment decisions.

Section 450.220 Self-Certification, Federal Findings, and Federal Approvals

Existing § 450.218 would become § 450.220. Proposed § 450.220 describes how States would self-certify that the transportation planning process is being carried out in accordance with all applicable requirements, including MAP–21 requirements. It also describes how FHWA and FTA would approve the STIP after the State submits the STIP to FHWA and FTA. This section would be largely unchanged except that in § 450.220(a)(4) the reference to section

1101(b) of SAFETEA–LU would become section 1101(b) of MAP–21, the successor provision.

Section 450.222 Project Selection From the STIP

Existing § 450.220 would become § 450.222. Proposed § 450.222 describes the procedures for the selection of projects from the STIP by the State and the MPOs. This section is changed in two ways. First, it would be revised to reflect MAP–21's increased emphasis on nonmetropolitan transportation planning. Second, it would be updated to reflect name changes to tribal funding programs. These changes are described below.

Proposed paragraph (c) would be revised to include the new MAP–21 requirements (23 U.S.C. 135(g)(6) and 49 U.S.C. 5304 (g)(6)) for States to cooperate with nonmetropolitan areas when selecting projects from the STIP for projects that are not on the NHS. This proposed new requirement will require States work with local officials, or, if applicable, RTPOs, when selecting projects from the STIP in nonmetropolitan areas. Prior to MAP–21, States were not required to conduct outreach with nonmetropolitan local officials when selecting projects from the STIP that are not on the NHS.

In revised § 450.222(d), ''Federal Lands Highway Program'' would be changed to ''Tribal Transportation Program, Federal Lands Transportation Program, and Federal Lands Access Program'' to reflect MAP–21 changes to 23 U.S.C. 201–204.

Section 450.224 Applicability of NEPA to Statewide Transportation Plans and Programs

Section 450.222 would become § 450.224 and be unchanged except that the acronym NEPA is spelled out as the ''National Environmental Policy Act of 1969 (42 U.S.C. 4321 et seq.).'' This change would be made throughout the proposed regulations; please see the redline version of the regulatory text included in the docket for further information.

Section 450.226 Phase-In of New Requirements

Existing § 450.224 would become § 450.226. This proposed section updates the schedule for implementation based on MAP–21 changes. The section is based on provisions in 23 U.S.C. 135(l) and 49 U.S.C. 5304(k), as well as the new performance requirements in 23 U.S.C. 150 and 49 U.S.C. 5326 and 5329.

For purposes of phasing in the new MAP–21 requirements, there are two categories of changes. The first category is those changes that are unrelated to performance management, and the second category is those changes that are performance management related. The FHWA and FTA propose two different phase-in schedules, one for each category of changes.

The major change unrelated to performance management is the new emphasis on nonmetropolitan transportation planning. The FHWA and FTA propose that STIPs and statewide long range plans adopted on or after a date 2 years after publication of this final rule in the **Federal Register** must reflect this new emphasis. The FHWA and FTA would only approve STIP amendments or updates that are based on a planning process that incorporates the new emphasis on nonmetropolitan transportation planning. For instance, if this final rule were published in fall of 2014, FHWA and FTA would only approve a STIP after fall of 2016 that meets the non-performance-based requirements of this rule. The FHWA and FTA also propose that before the end of this 2-year period, States may use the new MAP–21 requirements in developing STIPs and long-range transportation plans. The FHWA and FTA believe this approach is consistent with MAP–21 requirements (23 U.S.C. 135(l) and 49 U.S.C. 5303(k)) and does not require the State to deviate from its established planning update cycle to implement MAP–21 changes. This approach also meets the requirement that States shall reflect changes made to their transportation plan or STIP updates not later than 2 years after the date of issuance of guidance by the Secretary.

The second phase-in schedule would be for the new performance management requirements proposed in this NPRM (e.g., discussion of targets in long range plans and STIPs, requirements to coordinate target selection, linking of targets to investment priorities in STIPs, system performance reports, integration of elements of other plans) that depend on issuance of FHWA's and FTA's performance rules. The FHWA and FTA propose that updates and amendments to any STIPs and plans based on these new performance management requirements would be based on the effective date of the performance measures rules implementing 23 U.S.C. 150 and 49 U.S.C. 5326 and 5329.[38] The FHWA and FTA currently anticipate that the performance rules implementing these provisions would have the same effective date. If the effective date of these performance measure rules is not the same, the phase-in of the new performance management requirements would be based on the effective date of each individual performance measure rule. In order to determine the appropriate phase-in schedule of the new performance management requirements, FHWA and FTA balanced a number of statutory provisions and logistical and practical considerations. Each of these provisions has specific timing requirements for establishment of targets:

- 23 U.S.C. 150(d)(1)—States would have 1 year from the effective date of the performance management rule to establish targets (the specific timing will be discussed in the separate rulemaking implementing 23 U.S.C. 150);
- 49 U.S.C. 5329(d)(1)—States or recipients would be required to include performance targets in a safety plan 1 year after the effective date of the final rule; and
- 49 U.S.C. 5326(c)—Recipients would need to establish performance targets not later than 3 months after the issuance of the final rule and each fiscal year thereafter.

Once States or recipients establish targets, MPOs would be required to establish targets not later than 180 days after the date on which the relevant State or recipient establishes performance targets (23 U.S.C. 134(h)(2) and 49 U.S.C. 5303(h)(2)). These targets would need to be coordinated among the States, MPOs, and providers of public transportation to ensure consistency.

The FHWA and FTA determined that giving States, recipients, and MPOs 2 years following the effective date of the performance rules would provide adequate time for the relevant States, recipients, and MPOs to develop targets, coordinate targets, and include any performance-based planning requirements in their transportation planning process and related documents. This phase-in period would also provide time to integrate into the transportation planning process, directly or by reference, the goals, objectives, performance measures, and targets from other transportation plans and transportation processes, as proposed in 23 CFR 450.206(c) and 450.306(d). Depending on the measure, providing a 2-year phase-in of these requirements may provide MPOs additional time after the establishment of the targets to include these targets in any new or amended metropolitan or

[38] Federal-aid Highway Performance Measure Rules [RIN 2125–AF49, 2125–AF53, 2125–AF54], Transit Asset Management Rule [RIN 2132–AB07], and National and Public Transportation Safety Plans Rule [RIN 2132–AB20].

long range statewide transportation plans or transportation improvement programs.

Consistent with the statutory requirement in 23 U.S.C. 135(l) and 49 U.S.C. 5304(k), FHWA and FTA are not proposing to require a State to deviate from its established planning update cycle to implement the changes required by MAP–21 to the planning process.

Subpart C—Metropolitan Transportation Planning and Programming

Section 450.300 Purpose

Similar to the ''Purpose'' section of subpart B, existing § 450.300 would be revised to make two changes to reflect that under MAP–21 the metropolitan planning process becomes a performance-based process. The two changes include adding reference to the new 23 U.S.C. 150 and adding ''performance-based'' before the reference to the ''multimodal transportation planning process.''

Section 450.306 Scope of the Metropolitan Transportation Planning

Existing § 450.306 describes the scope of the metropolitan transportation planning process. Similar to proposed revisions to § 450.206 (the scope of the statewide and nonmetropolitan transportation planning process), FHWA and FTA propose to revise this section to incorporate MAP–21's critical performance-based changes to the planning process. States, MPOs, and providers of public transportation would link investment priorities (the transportation improvement program of projects) to achieving performance targets in key areas. Elements of a performance management approach would be included in the proposed revisions paragraphs (a) and (d): An emphasis on developing planning documents through a performance-based approach, establishment of performance targets, coordination of performance targets, and the integration of elements of other performance-based plans. These major proposed changes as well as other minor proposed changes are further described below.

Section 450.306 would be revised to add proposed new § 450.306(a) to reflect the new statutory language in 23 U.S.C. 134(c) and 49 U.S.C. 5303(c)(1) requiring a performance driven, outcome-based approach to planning for metropolitan areas.

Section 450.306(b) would become § 450.306(c) and be revised to add ''(including Section 4(f) properties as defined in 23 CFR 774.17)'' after ''human and natural environment'' to clarify that Section 4(f) properties should be included in considerations of human and natural environment for purposes of this section. This change also reflects the 2008 revision to the joint FHWA and FTA Section 4(f) regulations, which are now contained in 23 CFR 774 and include a definition for ''Section 4(f) Property''.

Revised § 450.306(d) is proposed to incorporate MAP–21 requirements for a performance-based approach to metropolitan transportation planning. See 23 U.S.C. 134(h)(2) and 49 U.S.C. 5303(h)(2). As described in paragraph (d)(1), part of the metropolitan planning process would include supporting the national goals, described in 23 U.S.C. 150(b), and general purposes, described in 49 U.S.C. 5301(c).

Proposed new paragraph (d)(2) starts building the foundational steps to this performance-based approach for MPOs by requiring them to establish performance targets for the Federal-aid highway program based on measures that FHWA will develop in separate rulemakings (Federal-aid Highway Performance Measure Rules [RIN 2125–AF49, 2125–AF53, 2125–AF54]). These separate rulemakings will contain detailed requirements for establishing targets. This paragraph also would require MPOs to establish performance targets using the measures and standards that FTA will develop in separate rulemakings (Transit Asset Management Rule [RIN 2132–AB07] and National and Public Transportation Safety Plans Rule [RIN 2132–AB20]). As part of the planning process, in proposed paragraph (d)(2), MPOs would be required to coordinate the selection and establishment of targets. When establishing targets for the Federal-aid highway program, MPOs would be required to ensure that the MPOs' and State's targets are as consistent as practicable. When establishing transit-related targets, MPOs would be required to coordinate to the maximum extent practicable with providers of public transportation. These coordination requirements would be based on the new MAP–21 requirements in 23 U.S.C. 134(h)(2)(B) and 49 U.S.C. 5303(h)(2)(B).

Paragraph (d)(3) would require MPOs to select performance targets not later than 180 days after the date on which the relevant State or provider of public transportation establishes performance targets based on the MAP–21 requirements.

Paragraph (d)(4) would continue to build the foundational steps by requiring MPOs to integrate into the metropolitan transportation planning process the elements (goals, objectives, performance measures, and targets) in other State transportation plans and processes, as well as any plans developed by providers of public transportation in the metropolitan planning area, required as part of a performance-based program. Examples of other performance-based plans and processes include the SHSP, as defined in the HSIP (23 U.S.C. 148), the State NHS asset management plan for highways in 23 U.S.C. 119(e), the transit asset management plan as defined in 49 U.S.C. 5326, the Public Agency Safety Plan in 49 U.S.C. 5329(d), the optional State Freight Plan, as described in MAP–21 section 1118, the CMAQ performance plan in 23 U.S.C. 149(l), the congestion management process, and other State transportation plans and processes required as part of a performance-based program.

Existing § 450.306(c) would become § 450.306(e) and be changed to include that the performance-based planning aspects of the metropolitan transportation planning process, as described above in proposed new paragraph (d), are not reviewable by any court. These changes are consistent with MAP–21 changes to 23 U.S.C. 134(h)(3) and 49 U.S.C. 5303(h)(3).

Existing § 450.306 (e) and (h) would be deleted and references to the new NHS asset management plan and the Transit Asset Management Plan, other safety and security planning and review processes, plans, and programs, and the SHSP would be moved to § 450.306(d)(5). These would be moved because, as discussed above, this section includes the MAP–21 requirements to integrate elements of other performance-based plans into the metropolitan transportation planning process.

Existing § 450.306(i) would be moved to new § 450.310(c).

Section 450.308 Funding for Transportation Planning and Unified Planning Work Programs

Existing § 450.308 would be retained and updated. This section describes funding for metropolitan transportation planning and the development of Unified Planning Work Programs (regulations for these work programs are contained in 23 CFR part 420).

Proposed § 450.308(a) would remove reference to the Equity Bonus Program, formerly codified at 23 U.S.C. 105, because MAP–21 repealed this program and it is no longer available as a funding source. Proposed § 450.308(a) would also add the sentence, ''At the option of the State, funds provided under 49 U.S.C. 5305(e) may also be provided to MPOs for activities that support metropolitan transportation planning.'' This proposed sentence does not reflect

a change in the law, but rather would be added to clarify that funds apportioned under 23 U.S.C. 5305(e), which are primarily for the purpose of State planning and research, are a possible source of funding to MPOs for activities that support metropolitan transportation planning. Statutory references in § 450.308(a) would be updated as follows: 23 U.S.C. 104(f) becomes 23 U.S.C. 104(d), reference to 49 U.S.C. 5305(d) is added, reference to 49 U.S.C. 5339 is deleted, reference to 23 U.S.C. 104(b)(1) and (b)(3) becomes 23 U.S.C. 104(b)(2), and reference to 23 U.S.C. 133(d)(3)(E) becomes 23 U.S.C. 133(d)(4). All of these changes would be based on changes from MAP–21.

Proposed § 450.308(d) would replace the word ''would'' with the word ''shall'' to clarify that the requirements described in (d) are requirements of any simplified statement of work.

Existing § 450.308(f) would be unchanged, except FHWA and FTA propose remove ''.1B'' after the reference to FTA Circular C8100 and instead add the words ''as amended'' after the reference to FTA Circular C8100 to accommodate possible future editions of this circular. Proposed § 450.308(f) would also update the title of this circular to reflect the most recent edition, which is called ''Program Guidance for Metropolitan Planning and State Planning and Research Program Grants.''

Section 450.310 Metropolitan Planning Organization Designation and Redesignation

Existing § 450.310 would be retained and revised to reflect changes from MAP–21, including changes to the structure of an MPO serving a TMA by adding representation by providers of public transportation to the list of officials that must be included. In addition, the proposed changes would move other provisions related to TMAs to this section. These changes, and other more minor changes, are described below.

Proposed § 450.310(c) is moved from existing § 450.306(i) and would be modified to reflect changes from MAP–21. In the first sentence, ''designate'' would be changed to ''identify,'' and the word ''additional'' would be deleted from this paragraph. The revisions would not change the meaning of this paragraph.

Consistent with MAP–21's requirements, proposed § 450.310(d)(1) would also require the structure of a MPO serving a TMA consist of representation by providers of public transportation, in addition to the officials identified in the existing regulations, and that each MPO serving a TMA satisfy the structure requirements no later than October 1, 2014. This NPRM proposes that representatives of providers of public transportation would have equal decisionmaking rights and authorities as other officials who are on the policy board of an MPO that serves a TMA. It is up to the MPO, in cooperation with providers of public transportation, to determine how this representation will be structured and established. The MPOs can restructure to meet this requirement without being redesignated by the Governor and local officials.

The FHWA and FTA have received several questions and comments [39] generally on how an MPO serving a TMA must be structured. As a result of these questions and comments, FHWA and FTA are requesting comment on whether any of the following questions should be addressed in the proposed regulation and, if so, how:

- Should the regulations clarify who appropriate ''officials'' may be?
- Can staff members or other alternates be substituted for the ''officials'' identified in paragraph (d)(1)?
- Can an official in paragraph (d)(1) serve in multiple capacities on the MPO board, e.g., can a local elected official or State official also serve as a representative of a major mode of transportation?
- Should the regulations provide more specificity on how each of the officials identified in paragraph (d)(1) should be represented on the MPO?
- Should the regulations include more information about MPO structure and governance?

To ease any necessary changes to MPO structure, the proposed rule includes new paragraph (d)(2), which would provide that an MPO may be restructured to meet the structure requirements without undergoing a redesignation. Since MAP–21 now provides a specific date for compliance with the required structure for an MPO serving a TMA, proposed new paragraph (d)(3) would require all the TMA MPOs to comply with this structure by October 1, 2014, except those MPOs that are exempt under 23 U.S.C. 134(d)(3) and 49 U.S.C. 5303(d)(3). This exemption has existed in statute in some form since 1991. The FTA and FHWA's long-standing interpretation of this provision is that an exemption from the MPO structure requirements is only appropriate for an MPO where (1) the MPO operates pursuant to a State law that was in effect on or before December 18, 1991; (2) such State law has not been amended after December 18, 1991, as regards to the structure or organization of the MPO; and (3) the MPO has not been designated or re-designated after December 18, 1991. An MPO that claims it qualifies for this exemption must self-certify its exempt status with the FTA and FHWA as part of the MPO certification process described at 23 CFR 450.334 or through some other documentation. The proposed rule would add this statutory provision (23 U.S.C. 134(d)(3) and 49 U.S.C. 5303(d)(3)) to the regulations.

Existing § 450.310(l)(3) adds ''described in paragraph (d).''

Section 450.312 Metropolitan Planning Area Boundaries

Proposed § 450.312 describes how metropolitan planning area boundaries would be established by agreement between the MPO and the Governor. This area is the geographic area in which the MPO carries out the metropolitan transportation planning process. This section is largely unchanged, with some minor, nonsubstantive, exceptions. Existing paragraph (a) would be split into two paragraphs. In paragraph (f), ''the appropriate'' would be added before ''MPOs.'' In paragraph (i), ''reduces access disadvantages experienced by'' would be revised to ''improves access to.'' None of these revisions are intended to change the meaning of this section.

Section 450.314 Metropolitan Planning Agreements

The metropolitan planning agreement helps facilitate the working relationship among MPOs, States, and providers of public transportation. Currently, MPOs, States, and providers of public transportation are required to form metropolitan planning agreements to delineate their respective responsibilities in the metropolitan planning process, including provisions for the cooperative development and sharing of information related to the formation of financial plans, the TIP, and the annual list of obligated projects.

The FHWA and FTA propose to revise § 450.314(a) to require that MPOs modify their existing metropolitan planning agreements to identify how the parties would work together to implement MAP–21's performance-based planning provisions. The modified metropolitan planning agreements would additionally identify

[39] On September 30, 2013, FTA and FHWA published ''Proposed Policy Guidance on Metropolitan Planning Organization Representation'' for notice and comment. 78 FR 60015.

how the MPO, State, and providers of public transportation will collect transportation system performance data, select performance targets for the metropolitan area, report metropolitan area targets, report actual system performance related to those targets, and collect data for asset management plans for the NHS. These proposed changes would make the metropolitan planning agreement a focal point for establishing how the MPO, the State, and providers of public transportation will cooperatively implement the performance-based planning and related performance management provisions in MAP–21. States, MPOs, and providers of public transportation would need to coordinate their targets in key national performance areas and document expectations for future performance. Also, this section proposes that the metropolitan planning agreement describe the collection of data for the State asset management plan for the NHS. The NHS is on both State and locally owned highways. Given multiple NHS highway ''owners,'' the agreement can serve as a mechanism for identifying respective roles and responsibilities of the State and local governments related to collecting data for the NHS asset management plan in metropolitan areas.

Section 450.314(a) also would be revised to replace the phrase ''public transportation operator(s)'' with ''providers of public transportation'' because this is the phrase used in statute. A new § 450.314(b) would be added to require that metropolitan planning agreements should be reviewed periodically and updated as necessary. A need for changes could result from a number of factors, such as new Federal legislation or regulations. This is proposed to ensure that metropolitan planning agreements remain relevant and reflect current planning needs in metropolitan areas.

Existing § 450.314(d) describes the requirement for an agreement when more than one MPO has been designated to serve an urbanized area. Existing § 450.314(d) would become proposed § 450.314(e), and would be unchanged with the exception that it would be revised to require that MPOs modify their existing metropolitan planning agreements to identify how the parties would work together to implement MAP–21's performance-based planning provisions.

Existing § 450.314(f) describes the requirement for an agreement when part of an urbanized area that has been designated as a TMA overlaps into an adjacent MPA serving an urbanized area that is not designated as a TMA. Existing § 450.314(f) would become proposed § 450.314(g) and would be unchanged with the exception that, similar to proposed §§ 450.314(a) and 450.314(e), it would be revised to require that MPOs modify their existing metropolitan planning agreements to identify how the parties would work together to implement MAP–21's performance-based planning provisions. The MAP–21 requires that the States and MPOs coordinate their targets with each other to ensure consistency, to the maximum extent practicable. In addition, for transit-related targets, MAP–21 requires States and MPOs to coordinate their targets relating to safety and state of good repair with providers of public transportation to ensure consistency with other performance-based provisions applicable to transit providers, to the maximum extent practicable. The proposed revisions to the metropolitan planning agreement requirements in this section are intended to foster State, MPO, and public transportation provider coordination and consistency during performance target establishment. Also, in the case where there are multiple MPOs serving a single urbanized area, the agreement established under proposed § 450.314(e) would assist with coordination among the MPOs, States, and providers of public transportation serving this single urbanized area such that the individual State and MPO targets are consistent to the maximum extent practicable. Similarly, the metropolitan planning agreement established under § 450.214(f) would foster the development of consistent performance targets among the States, MPOs, and providers of public transportation in the situation where part of an urbanized area that has been designated as a TMA overlaps into an adjacent MPO serving an urbanized area that is not designated as a TMA. This coordination should help align MPO and State decisionmaking and advance performance outcomes for the States.

Section 450.316 Interested Parties, Participation and Consultation

Section 450.316 currently requires an MPO to use a documented participation plan to provide individuals, affected public agencies, representatives of public transportation employees, freight shippers, providers of freight transportation services, private providers of transportation, representatives of users of public transportation, representatives of users of pedestrian walkways and bicycle transportation facilities, representatives of the disabled, and other interested parties with reasonable opportunities to be involved in the metropolitan transportation planning process. Examples of affected public agencies that an MPO might provide with an opportunity to be involved in the metropolitan planning process under § 450.316(a) include agencies with responsibility for economic development, human and natural resources, environmental protection, sustainability, mitigation, adaptation, climate, and air quality. The participation plan is required to include, for example, provisions for timely notice of public meetings and access to information about planning issues and processes, publishing public information, and responding to public input.

Proposed § 450.316(a)(2) would be revised to change the general citation to the transportation conformity regulations (''40 CFR part 93'') to the more specific regulatory citation to the provision in the transportation conformity regulations that addresses consultation (''40 CFR 93.105'').

Proposed § 450.316(b)(3) would be revised to change the statutory reference from 23 U.S.C. 204 to 23 U.S.C. 201–204. Although the relevant MAP–21 provision (23 U.S.C. 134(g)(3)(B)(iii)) continues to reference only 23 U.S.C. 204, there were significant changes made to the Federal Lands Highways Program under MAP–21 and that program was split into several different provisions—23 U.S.C. 201–204. The metropolitan planning process must provide for the design and delivery of transportation services provided by recipients of assistance under all these provisions.

Section 450.318 Transportation Planning Studies and Project Development

Existing § 450.318, which largely mirrors existing § 450.212, would be retained unchanged except for the deletion of existing paragraph (d). The FHWA and FTA propose to delete paragraph (d) due to revisions made to 49 U.S.C. 5309 by MAP–21. More specifically, MAP–21 removed the requirement for a stand-alone alternatives analysis for projects that seek Section 5309(d) or (e) funding. The reader should refer to the discussion provided under § 450.212 for an explanation of the proposed retention.

Section 450.320 Development of Programmatic Mitigation Plans

Proposed § 450.320 would follow the same language and format as proposed § 450.214, with the exception of changing references from the State or statewide to MPO or metropolitan, as

necessary. It would be duplicated in subpart C to avoid the need for cross referencing and to provide the same option for MPOs to develop programmatic mitigation plan(s) in the metropolitan transportation planning process. The reader should refer to the discussion provided under § 450.214 for an explanation of the proposed changes.

Section 450.322 Congestion Management Process in Transportation Management Areas

In TMAs, the metropolitan transportation planning process must include a congestion management process, 23 U.S.C. 134(k)(3). The congestion management process provides for the effective management of new and existing transportation facilities through the use of travel demand reduction and operational strategies. When developing and implementing a congestion management process, MPOs may use the process to support the performance-based approach to transportation decisionmaking. Specifically, the congestion management process may support the performance-based approach to metropolitan transportation planning in this part, support applicable performance measures established under section 23 U.S.C. 150(c), and also support applicable national goals described in section 23 U.S.C. 150(b) and in 49 U.S.C. 5301.

Existing § 450.320(b) would be revised and split into § 450.322(b) and (c). Proposed § 450.322(c) would add ''and improve efficient service integration within and across modes, including highway, transit, passenger and freight rail operations, and non-motorized transport'' to the list of strategies to manage demand and improve operations. This added provision would encourage States, MPOs, and operators of public transportation to develop multimodal strategies to manage demand and improve operations.

Existing § 450.320(c) would become § 450.322(d) and be revised as follows. Paragraph (d)(1) would be revised to add ''underlying'' before ''causes of recurring and non-recurring congestion'' to provide clarity with no change in meaning. Paragraph (d)(2) would be revised to add ''including providers of public transportation.'' This revision would emphasize that States and MPOs need to consult with local officials and operators of major modes of transportation, including providers of public transportation as they define levels of acceptable system performance as part of the congestion management process. This change closely tracks MAP–21's added provision in 23 U.S.C. 134(d)(2) and 49 U.S.C. 5303(d)(2), which requires representation of providers of public transportation on MPOs.

Section 450.324 Development and Content of the Metropolitan Transportation Plan

Existing § 450.322 would become § 450.324. It would be revised to reflect MAP–21's provision that each MPO must implement a performance-based approach in the development of its metropolitan transportation plan. The metropolitan transportation plan is a multimodal transportation plan addressing at least a 20-year planning horizon for the metropolitan planning area. The proposed performance-based changes to this section would require each MPO to describe in its metropolitan transportation plan the performance measures and performance targets it used to assess the performance of its transportation system. The MPO must also include a system performance report in the plan that contains its evaluation of the condition and performance of the transportation system with respect to performance targets established to address the performance measures identified under 23 U.S.C. 150(c), and 49 U.S.C. 5326(c) and 49 U.S.C. 5329(d). The MPO must also report on the progress it achieves in meeting its performance targets in comparison with the system performance recorded in previous reports. This section is also revised to propose that MPOs may use scenario planning, a tool to inform decisionmakers about the implications of various transportation system investments and performance, during the development of their plan. Finally, this section encourages the MPO, when developing the financial plan as part of the long range plan, to assess the appropriateness of innovative finance techniques in its development of financing strategies. In addition, when assessing its capital investments as part of the plan, the MPO should consider the financial plans and investment strategies that are part of the State Asset Management Plan for the NHS (as defined in 23 U.S.C. 119(e)) and of the investment priorities of the public transit asset management plan (as discussed in 49 U.S.C. 5326). These changes, and other minor changes, are as follows.

Proposed § 450.324(a) would be revised to add ''In formulating the transportation plan, the metropolitan planning organization shall consider factors described in § 450.306 as the factors relate to a 20-year forecast period.'' to clarify that MPOs shall consider planning factors that are described in § 450.306.

Existing § 450.322(b) would be retained as proposed § 450.324(b) and be revised to provide clarity by changing ''lead to'' to ''provide for.'' Reference to ''including accessible pedestrian and bicycle transportation facilities'' would be added to be consistent with 23 U.S.C. 134(c)(2) and 49 U.S.C. 5303(c)(2).

Existing § 450.322(f) would become § 450.324(f) and be revised to add the MAP–21 requirements or clarify existing requirements for a metropolitan transportation plan, as described below.

Existing § 450.322(f)(1) would become § 450.324(f)(1) and be revised to require that, in addition to the projected demand for transportation, an MPO must include the current transportation demand of persons and goods in the metropolitan transportation plan. This change would enable the public and decision makers to better understand existing transportation system needs.

Existing § 450.322(f)(2) would become proposed § 450.324(f)(2). It would be revised for clarity and to include MAP–21 changes that specifically require MPOs to identify ''nonmotorized transportation facilities'' in the Metropolitan Transportation Plan. While the term ''nonmotorized transportation facilities'' is added to reflect MAP–21, the existing regulation requires MPOs to identify pedestrian walkways and bicycle facilities in their metropolitan transportation plans. To reflect this change, this paragraph would be revised to state ''nonmotorized transportation facilities (e.g., pedestrian walkways and bicycle facilities).'' See 23 U.S.C. 134(i)(2)(A)(i) and 49 U.S.C. 5303(i)(2)(A)(i). This section also would be updated to reflect that the legislation eliminated the requirement for an Alternatives Analysis.

Proposed new paragraphs (f)(3) and (4) would require that MPOs include important elements of MAP 21's performance-based approach into the metropolitan transportation plan. Specifically, MAP–21 requires that MPOs describe performance targets, evaluate the condition and performance of the transportation system, and report in the metropolitan transportation plan on progress it has achieved toward their performance targets. See 23 U.S.C. 134(i)(2)(B) and (C) and 49 U.S.C. 5303(i)(2)(B) and (C).

New paragraph (f)(3) proposes to require that an MPO describe in its metropolitan transportation plan the performance measures and performance targets that it used to assess the

performance of the transportation system.

New paragraph (f)(4) proposes to require that an MPO include a system performance report that describes the MPO's evaluation of the condition and performance of the transportation system with respect to performance targets identified in § 450.324(f)(3) and the progress toward the achievement of the performance targets. This section also proposes to require that MPOs that elect to use scenario planning during the development of their metropolitan transportation plans must also describe how the preferred scenario would improve the condition and performance of the transportation system and how changes in local development policies and investment strategies would impact the cost of achieving established performance targets. The option for MPOs to develop multiple scenarios is discussed below in proposed § 450.324(i).

Existing § 450.322(f)(5) would become § 450.324(f)(7) and be revised to include a provision that as MPOs assess capital investment and other strategies to preserve the existing and projected metropolitan transportation infrastructure and provide for multimodal capacity increases, they should consider the financial plan and investment strategies from the newly required State asset management plan for the NHS (as defined in 23 U.S.C. 119(e)) and the investment priorities of the newly required public transit asset management plans (as discussed in 49 U.S.C. 5326). Information from these newly required plans can inform MPOs in their capital investment decisionmaking process. Furthermore, they may also consider energy plans, and strategies that will enhance the resiliency of the transportation system to current and future conditions. Such conditions could include severe weather events and changes in weather patterns.

Existing § 450.322(f)(9) would become proposed § 450.324(f)(8), which adds references to ''transportation alternatives'' and ''associated transit improvements,'' as described in 23 U.S.C. 101(a) and 49 U.S.C. 5302(a) respectively, to reflect new programs that fund projects similar to those funded under the former Transportation Enhancements and Transit Enhancement Programs. The statute still requires ''transportation and transit enhancement activities'' to be included in a metropolitan transportation plan (23 U.S.C. 134(i)(2)(H) and 49 U.S.C. 5303(i)(2)(H)).

Existing § 450.322(f)(10) would become § 450.324(f)(11). In § 450.324(f)(11)(iii), language would be added, ''the financial plan may include an assessment of the appropriateness of innovative finance techniques (for example, tolling, pricing, bonding, public private partnerships, or other strategies) as revenue sources for projects in the plan,'' in consideration of 23 U.S.C. 106(h)(3)(D), which encourages early consideration of innovative finance as part of a project financial plan. Reference to the December 11, 2007, date in § 450.324(f)(11)(iv) would be deleted because this date has passed.

Existing § 450.322(h) would become § 450.324(h) and would be revised to state that MPOs should integrate into the metropolitan transportation plan the goals, objectives, performance measures, and strategies described in the HSIP, including in the SHSP required under 23 U.S.C. 148 and the Public Transportation Agency Safety Plan required under 49 U.S.C. 5329, the FHWA and FTA propose removing reference to the term ''targets'' because MPOs would be required to integrate targets from these plans and processes into the transportation planning process under proposed § 450.306(d).

Consistent with MAP–21, the proposed § 450.324(i) would encourage MPOs to elect to undertake scenario planning as part of the development of the metropolitan transportation plan. Scenario planning is an analytical tool that provides a framework for developing a shared vision of the future. It informs decisionmakers and the public about the potential implications of various investments and policies on transportation system condition and performance. Scenario planning is currently used by many MPOs as part of their transportation planning process and FHWA and FTA consider it a best practice. This proposed section describes the suggested framework that MPOs may follow as they develop those scenarios including potential regional investment strategies, alternative distributions of population and employment, land use, future climate scenarios, system performance measures including locally developed measures, and the relationship among a wider array of investments and local priorities. See 23 U.S.C. 134(i)(4) and 49 U.S.C. 5303(i)(4).

Existing § 450.322(l) would be retained and revised and become proposed § 450.324(m). Language would be added to describe the 12-month conformity lapse grace period in accordance with the Clean Air Act and the transportation conformity regulations (40 CFR part 93, subpart A). This change would be included here because it provides a grace period of up to 1 year before the existing conformity determination on the metropolitan plan will lapse. Specific information on conformity lapse grace period can be found in the transportation conformity regulations at 40 CFR 93.104.[40] The FHWA and FTA propose these revisions to incorporate the changes to the conformity regulations that have occurred since the last revisions to 23 CFR part 450. In addition, the general reference to the interagency consultation definition in ''40 CFR part 93'' would be replaced with the more specific citation at ''40 CFR 93.105.''

Section 450.326 Development and Content of the Transportation Improvement Program (TIP)

Existing § 450.324 would become § 450.326 and would describe the development and the content of the TIP. The TIP is the prioritized program of transportation projects covering a period of 4 years that is developed and adopted by the MPO and approved by the Governor. This section would be revised to incorporate MAP–21's transformation of the planning and programming process to a performance-based planning and programming process (see proposed new paragraphs (c) and (d)) as well as other minor changes. The proposed revisions are as follows.

Proposed § 450.326(a) would be revised to add one of the MAP–21 general requirements for a TIP—that the TIP ''shall reflect the investment priorities established in the current metropolitan transportation plan.'' See 23 U.S.C. 134(j)(1)(A)(ii) and 49 U.S.C. 5303(j)(1)(A)(ii).

The FHWA and FTA propose to incorporate MAP–21 requirements for a performance-based TIP in proposed new § 450.326(c) and new § 450.326(d). See 23 U.S.C. 134(j)(1)(A) and (j)(2)(D) and 49 U.S.C. 5303(j)(1)(A) and (j)(2)(D). Proposed paragraph (c) would require that MPOs design TIPs that make progress toward achieving MPO performance targets. Importantly, proposed paragraph (d) would require the TIP describe how the projects in the TIP would achieve the MPO performance targets—linking investment priorities to those targets. Because the development of a TIP is a public process, these new requirements would promote greater accountability and transparency of transportation investment decisions.

[40] For more information please see Transportation Conformity Rule Amendments to Implement Provisions contained in the 2005 Safe, Accountable, Flexible, Efficient Transportation Equity Act: A Legacy for Users (SAFETEA–LU), 73 FR 4420, 4423 (Jan. 24, 2008).

Existing § 450.324(c) would become § 450.326(e) and be revised to reflect MAP–21 changes to programs, phrases, and plans. Those changes are ''transportation enhancements'' would become ''transportation alternatives,'' and ''transit enhancements'' would become ''associated transit improvements.'' ''Strategic Highway Safety Plan'' would be updated to become the ''Highway Safety Improvement Program'' since the HSIP is the safety funding program associated with funding safety projects in the TIP. ''Federal Lands Highway Program'' would be changed to ''Tribal Transportation Program, Federal Lands Transportation Program, and Federal Lands Access Program'' to reflect MAP–21 changes to 23 U.S.C. 201–204. In addition, ''accessible'' would be added before ''pedestrian walkways.'' Statutory citations referenced in proposed § 450.326(e)(2) would be changed as follows: 23 U.S.C. 104(f) becomes 23 U.S.C. 104(d), and 49 U.S.C. 5339 is deleted. Under proposed § 450.326(e)(4), ''National Highway System'' and ''Equity Bonus'' would be deleted because the programs are not continued under MAP–21, and eligibility is not continued under the NHPP program that replaced the NHS program. In addition ''State planning and research projects'' is replaced with ''metropolitan planning projects'' to correct an error in the existing regulations. Because of the creation of FTA's emergency relief funding program, FHWA and FTA want to clarify that § 450.324(c)(5), which indicates that emergency relief projects meeting certain conditions are not required to be included in the TIP, would not apply to resiliency projects funded under 49 U.S.C. 5324.

Existing § 450.324(f) would become proposed § 450.326(h) and be updated to add ''subpart A'' after the second reference to ''40 CFR part 93'' to be more specific regarding the citation for the transportation conformity regulations.

Existing § 450.324(h) would become § 450.326(j) and be unchanged, except that the reference to 270 days after the effective date of the old rule would be deleted because this date has passed and reference to ''(but is not required to)'' after the word ''may'' would be deleted because it is redundant.

Consistent with the new requirements to integrate elements of other performance-based plans into the metropolitan transportation planning process as described above, a new paragraph (m) would be added to indicate that the TIP should be informed by the financial plan and investment strategies from the State asset management plan for the NHS and the public transit asset management plan. See 23 U.S.C. 134(h)(2)(D) and 49 U.S.C. 5303(h)(2)(C). The financial plan of the State asset management plan for the NHS and the investment strategies of the public transit asset management plan are elements of new performance-based plans required under MAP–21. The FHWA and FTA propose in this section that MPOs consider these elements as part of the investment decisionmaking process to inform the TIP.

Existing § 450.324(k) would be deleted because the topic is addressed in proposed § 450.324(j).

Existing § 450.324(m) would become proposed § 450.326(p) and be revised to include language describing the 12-month conformity lapse grace period in accordance with the Clean Air Act and the transportation conformity regulations (40 CFR part 93, subpart A). This change would be included here because it provides a grace period of up to 1 year before the existing conformity determination on the TIP will lapse. Specific information on conformity lapse grace period can be found in the transportation conformity regulations at 40 CFR 93.104. In addition, the general reference to the interagency consultation definition in ''40 CFR part 93'' would be replaced with the more specific citation at ''40 CFR 93.105.''

Section 450.332 Project Selection From the TIP

Existing § 450.330 would become proposed § 450.332. References to projects funded under the Bridge or Interstate maintenance programs would be removed because these programs were eliminated in MAP–21. Also, ''Federal Lands Highway Program'' would be changed to ''Tribal Transportation Program, Federal Lands Transportation Program, and Federal Lands Access Program'' to reflect MAP–21 changes to 23 U.S.C. 201–204.

Section 450.336 Certifications and Federal Certifications

Existing § 450.334 would be retained and become § 450.336. Proposed § 450.336 describes the long-standing requirement that the State and the MPO(s) would periodically certify that the metropolitan transportation planning process is being carried out in accordance with all applicable requirements and goes on to specifically describe what the applicable requirements are.

The only change to this section would be updating reference in § 450.336(a)(5) from the SAFETEA–LU provision to the successor provision in MAP–21.

The MPO self-certifications and Federal certifications of the planning process in TMA areas would continue to be based on meeting the requirements of 23 U.S.C. 134 and 49 U.S.C. 5303, subject to the phase-in requirements discussed in proposed § 450.340, and include meeting the requirements of the MAP–21 planning provisions implemented through this regulation. Some of the new planning requirements under Titles 23 and 49, which MPOs would have to meet to self-certify, would include the performance-based planning requirements. As part of the self-certification, larger MPOs would also certify that they are meeting the new requirements for MPO policy board representation in TMA areas. The FHWA and FTA would review that TMAs are meeting these requirements during FHWA and FTA certification reviews. The FHWA and FTA would conduct a certification review of each TMA at least once every 4 years.

Section 450.340 Phase-In of New Requirements

For purposes of phasing in the MAP–21 requirements, there are two categories of changes. The first category is those changes that are unrelated to performance management, and the second category is those changes that are performance management based. The FHWA and FTA propose two different phase-in schedules, one for each category of changes.

The proposed changes to this section are similar to the changes made to the phase-in requirements for the statewide and nonmetropolitan transportation planning provisions in proposed 23 CFR 450.226. With respect to any non-performance management changes, FHWA and FTA propose that the MPOs should follow the same phase-in requirements as the States, including not deviating from their established planning update cycle to implement the changes required by MAP–21 to the planning process. The structure of the planning requirements is based on integrated statewide and metropolitan planning processes. If the metropolitan planning process had a different phase-in schedule than the statewide planning process, the integration of the two processes would be eroded. There are provisions throughout the statute and regulations that support this proposal and demonstrate how the processes are integrated, including:

- 23 U.S.C. 135(b)(1) and 49 U.S.C. 5304(b)(1) require the State to coordinate planning carried out under the statewide and nonmetropolitan provisions with the transportation

planning activities carried out under the metropolitan planning provisions.

• Existing regulations (23 CFR 450.216(b)) require that the TIP be included without change in the STIP, directly or by reference, after approval of the TIP by the MPO and the Governor.

• Existing regulations (23 CFR 450.218) provide that the State shall certify that the transportation planning process is carried out in accordance with the applicable metropolitan and statewide planning requirements in 23 U.S.C. 134 and 135 and 49 U.S.C. 5303 and 5304.

• In 23 U.S.C. 134 and 135 and 49 U.S.C. 5303 and 5304, there are requirements that either the MPO cooperate with the State on the development of the MPO financial plan and the TIP or that the State cooperate with the MPO in development of the statewide transportation plan and the STIP.

Because of all of these requirements to cooperate in the development of documents and to consider the planning processes together, FHWA and FTA determined that it is important that both the metropolitan and the statewide and nonmetropolitan processes have similar phase-in requirements. The MPOs, as well as States, also would have the option of developing any planning products consistent with the new regulatory requirements immediately upon issuance of the planning final rule.

With respect to any performance management changes, the MPOs would still need to consider the timing of implementing the new performance-based planning requirements (e.g., new requirements for the Metropolitan Planning Agreement).

Appendix A—Linking the Transportation Planning and NEPA Processes

The Agencies propose to retain Appendix A, which will continue to be referenced in §§ 450.212 and 450.318. References to Alternatives Analysis studies as required for funding under 49 U.S.C. 5309 are proposed to be removed pursuant to the elimination of that requirement by MAP–21. References to Alternatives Analysis studies as optional tools for linking planning with the environmental process will be retained, as these studies may still be completed by project sponsors at their option.

49 CFR Part 613

This section would be revised to refer to the proposed regulations in 23 CFR part 450. Because FHWA and the FTA jointly administer the transportation planning and programming process, we propose to keep the regulations identical.

V. Regulatory Analyses and Notices

All comments received on or before the close of business on the comment closing date indicated above will be considered and available for examination in the docket at the location specified in the **ADDRESSES** section above. Comments received after the comment closing date will be filed in the docket and considered to the extent practicable. In addition to late comments, we will continue to file relevant information in the docket as it becomes available after the comment period closing date, and interested persons should continue to examine the docket for new material.

Executive Order 12866 (Regulatory Planning and Review), Executive Order 13563 (Improving Regulation and Regulatory Review) and DOT Regulatory Policies and Procedures

The FHWA and FTA have determined preliminarily that this rulemaking would be a significant regulatory action within the meaning of Executive Order 12866, and is significant under DOT regulatory policies and procedures because of substantial State, congressional, local government, and public interest. These interests involve receipt of Federal financial support for transportation investments, appropriate compliance with statutory requirements, and balancing of transportation mobility and environmental goals. The changes proposed herein would add new analysis, coordination, and documentation requirements (e.g., performance-based planning and programming, cooperation with local officials responsible for transportation or, if applicable, RTPOs, and new requirements for TMA MPO policy board membership). In preparing this proposal, FHWA and FTA have sought to maintain existing flexibility of operation wherever possible for States, MPOs, and other affected organizations, and to use existing processes to accomplish any new tasks or activities.

The FHWA and FTA have conducted a cost analysis identifying each of the proposed regulatory changes that would have a significant cost impact for MPOs, States, or providers of public transportation, and have estimated those costs on an annual basis. This cost analysis is included as a separate document, entitled ''Regulatory Cost Analysis of Proposed Rulemaking,'' and is available for review in the docket.

The FHWA and FTA do not have specific data to assess the monetary value of the benefits to the proposed changes to the planning process made by this rule. The FHWA and FTA have not been able to find data or empirical studies to assist it in monetizing or quantifying the benefits of this NPRM. In addition, estimates of the benefits of this NPRM would be difficult to develop. The FHWA and FTA expect that the proposed regulatory changes to the planning process would improve decisionmaking through increased transparency and accountability and support the national goals described in 23 U.S.C. 150(b) and 49 U.S.C. 5301. The proposal would promote transparency by requiring establishment of performance targets in key areas, such as safety, infrastructure condition, system reliability, emissions, and congestion, and by expressly linking investment decisions to the achievement of such targets. This would be documented in plans developed with public review. The proposal would promote accountability through mandating reports on progress toward meeting those targets. The FHWA and FTA expect that the proposed regulatory changes to the planning process would support the national goals described in 23 U.S.C. 150(b) and 49 U.S.C. 5301.

Beyond improved transparency and accountability, there are several other benefits of the proposal. Other elements of the proposal may improve decisionmaking, such as representation by providers of public transportation on each MPO that serves a TMA, updating the metropolitan planning agreements, requiring States to have a higher level of involvement with nonmetropolitan local officials, and providing an optional process for the creation of RTPOs. The proposal may enhance the statewide and nonmetropolitan transportation planning process by requiring State DOTs to cooperate with nonmetropolitan local officials or RTPOs, if applicable, when conducting rural transportation planning giving the local officials or RTPOs a stronger voice in the development of planning products and project selection. The proposed option for MPOs to use scenario planning in the development of their metropolitan transportation plans provides MPOs a framework for improved decisionmaking through comparison of the performance tradeoffs of various locally determined scenarios for transportation investment. Although conducting scenario planning entails costs, savings from improved implementation could offset these costs. These benefits will improve the transportation planning process. The FHWA and the FTA invite comments on

the potential costs and benefits that might be associated with the option for MPOs to use scenario planning during development of the metropolitan transportation plan.

The proposed option for State DOTs and MPOs to develop a programmatic mitigation plan as part of the statewide and the metropolitan transportation planning processes provides a framework whereby States and MPOs may identify environmental resources early in the planning process and as a result, potentially minimize or avoid impacts to these resources. This has the potential to streamline project development and to protect environmental resources and may have benefits that outweigh the costs of performing the analysis. The FHWA and the FTA invite comments on the potential costs and benefits that might be associated with the option for States and MPOs to develop a programmatic mitigation plan as part of the statewide or metropolitan transportation planning process.

Based on the cost analysis, we estimate the total cost of this proposed rule is $30.8 million. Of this total, the estimated costs for all 52 States [41] and an estimated 420 MPOs would be approximately $28.3 million per year. Eighty percent of these costs are directly reimbursable through Federal transportation funds allocated for metropolitan planning (23 U.S.C. 104(f) and 49 U.S.C. 5303(h)) and for State planning and research (23 U.S.C. 505 and 49 U.S.C. 5313). The estimated cost to 600 providers of public transportation would be approximately $2.4 million per year. Eighty percent of these costs are directly reimbursable through Federal transportation funds allocated for urbanized area formula grants (4 U.S.C. 5307, 49 U.S.C. 5311).

The MAP–21 did not significantly increase the mandatory set-aside in Federal funds for metropolitan transportation planning, as well as Statewide Planning and Research funding. The States, providers of public transportation, and MPOs have the flexibility to use certain other categories of Federal highway dollars for transportation planning, such as Surface Transportation Program funds, if they so desire. Consequently, the increase in non-Federal cost burden attributable to this proposed rulemaking is estimated to be only $6.2 million per year in total. The total Federal, State, and local cost of the planning program is $1,166,471,400. As the cost burden of this rule is estimated to be 2.6 percent of the total planning program, we believe that the economic impact of this rulemaking would be minimal and the benefits of implementing this rulemaking would outweigh the costs.

The FHWA and FTA welcome comments on the economic impacts of these proposed regulations. Comments, including those from the State DOTs, providers of public transportation, and MPOs, regarding specific burdens, impacts, and costs would be most welcome and would aid us in more fully appreciating the impacts of this ongoing planning process requirement. The FHWA and FTA encourage comments on all facets of this proposal regarding its costs, burdens, and impacts.

Regulatory Flexibility Act

In compliance with the Regulatory Flexibility Act (Pub. L. 96–354; 5 U.S.C. 601–612), FHWA and FTA have determined that States and metropolitan planning organizations are not included in the definition of a small entity set forth in 5 U.S.C. 601. Small governmental jurisdictions are limited to representations of populations of less than 50,000. Metropolitan planning organizations, by definition, represent urbanized areas having a minimum population of 50,000. Because the regulations are primarily intended for States and MPOs, FHWA and FTA have determined that the action would not have a significant economic impact on a substantial number of small entities. Therefore, I hereby certify that the action would not have a significant economic impact on a substantial number of small entities.

Unfunded Mandates Reform Act of 1995

This proposed rule would not impose unfunded mandates as defined by the Unfunded Mandates Reform Act of 1995 (Pub. L. 104–4, March 22, 1995, 109 Stat. 48). This proposed rule would not result in the expenditure of non-Federal funds by State, local, and tribal governments, in the aggregate, or by the private sector, of $143.1 million in any one year (2 U.S.C. 1532). Eighty percent of the costs attributable to this rulemaking are directly reimbursable through Federal transportation funds allocated for metropolitan planning (23 U.S.C. 104(f) and 49 U.S.C. 5303(h)) and for State planning and research (23 U.S.C. 505 and 49 U.S.C. 5313).

Additionally, the definition of ''Federal mandate'' in the Unfunded Mandates Reform Act excludes financial assistance of the type in which State, local, or tribal governments have authority to adjust their participation in the program in accordance with changes made in the program by the Federal Government. The Federal-aid highway program and Federal Transit Act permit this type of flexibility to the States.

Executive Order 13132 (Federalism)

The FHWA and FTA have analyzed this proposed action in accordance with the principles and criteria contained in Executive Order 13132 and have determined that this proposed action would not have sufficient federalism implications to warrant the preparation of a federalism assessment. The FHWA and FTA do not believe that this rulemaking will have substantial, direct effects on the States, on the relationship between the national government and the States, or on the distribution of power and responsibilities among the various levels of government. The FHWA and FTA have also determined that this proposed action would not preempt any State law or regulation or affect the States' ability to discharge traditional State governmental functions. Comment is solicited specifically on the federalism implications of this proposal.

Executive Order 12372 (Intergovernmental Review)

Catalog of Federal Domestic Assistance Program Numbers 20.205, Highway Planning and Construction (or 20.217); 20.500, Federal Transit Capital Improvement Grants; 20.505, Federal Transit Technical Studies Grants; 20.507, Federal Transit Capital and Operating Assistance Formula Grants. The regulations implementing Executive Order 12372 regarding intergovernmental consultation in Federal programs and activities apply to these programs and were carried out as part of the outreach on the federalism implications of this rulemaking. This EO applies because State and local governments would be directly affected by the proposed regulation, which is a condition on Federal highway funding. The FHWA and the FTA solicit comments on this issue.

Paperwork Reduction Act

Under the Paperwork Reduction Act of 1995 (PRA) (44 U.S.C. 3501 et seq.), Federal agencies must obtain approval from the Office of Management and Budget (OMB) prior to conducting or sponsoring a collection of information. The FHWA and FTA have determined that this proposal contains collections of information for the purposes of the PRA. The reporting requirements for metropolitan planning unified planning work programs (UPWPs), transportation plans, and TIPs are currently approved

[41] This number (52 States) includes the 50 States, the District of Columbia, and Puerto Rico. This is consistent with the definition of ''States'' in the current and proposed regulations at 23 CFR 450.104.

under OMB control number 2132–0529. Separately, FHWA is updating the information reporting requirements for State planning and research work programs, which has been approved by the OMB under control number 2125–0039. These State planning and research work program are governed under a separate regulation at 23 CFR 420. The FHWA is updating 23 CFR 420 and will be issuing a separate NPRM for it soon. The FTA conducted the analysis supporting this approval on behalf of both FTA and FHWA, since the regulations are jointly issued by both agencies. The reporting requirements for statewide transportation plans and programs are also approved under this same OMB control number. Because approval for the FHWA and FTA collection will soon be expiring, both agencies are seeking renewed approval for its existing collection.

The paragraphs below describe the burden analysis conducted by FHWA and the FTA for the existing planning requirements in this proposed regulation which remain unchanged from SAFETEA–LU and were carried over from the existing regulation. It serves as a baseline burden analysis (analysis of the burden to implement elements of the existing regulations which were carried over from the existing regulation into these proposed regulations without change). It is followed by a description of the burden analysis for the new (changed) planning requirements proposed by this NPRM, which resulted from the passage of MAP–21.

Burden Analysis for the Existing Planning Requirements (Baseline Burden Analysis)

The Unified Planning Work Program (UPWP) identifies transportation planning activities in metropolitan areas and supports the request for funding to support the work under both FTA and FHWA planning programs in metropolitan areas. A similar listing of planning activities is prepared on a statewide level as the basis for FTA and FHWA SP&R funding. The metropolitan plan and statewide plan reflect the long range goals and objectives determined through the metropolitan and statewide transportation planning processes respectively and have a 20-year planning horizon. The TIP and STIP are short-range multiyear listings (4 years) of highway and transit improvement projects which are consistent with the metropolitan and statewide plans and which support the request for, and receipt of, Federal transportation funding under Title 23 U.S.C. and Chapter 53 of Title 49 U.S.C.

The FTA and FHWA jointly carry out the Federal mandate to improve metropolitan and statewide transportation under authority of Title 49, Chapter 53, and Title 23 U.S.C. Sections 5305(g) of Title 49 and 104(f) of Title 23 authorize funds to support transportation planning at metropolitan and statewide levels. As a condition to receive Title 49, Chapter 53, and Title 23 funding, requirements are established for metropolitan and statewide transportation planning under Sections 5303 and 5304 of Title 49 and Sections 134 and 135 of Title 23 that call for development of transportation plans and transportation improvement programs in all States and metropolitan areas. The information collection activities necessary to prepare federally required plans and programs, and the supporting planning studies proposed for funding in UPWPs and under the SP&R work programs are necessary to monitor and evaluate current and projected usage and performance of transportation systems nationwide—in each urbanized area and throughout every State.

The metropolitan transportation plan and TIP are required by 49 U.S.C. 5303 and 23 U.S.C. 134, which state that ''metropolitan planning organizations, in cooperation with the State, shall develop transportation plans and programs for urbanized areas of the State.'' Sections 49 U.S.C. 5304 and 23 U.S.C. 135 require that each ''State shall develop a long-range transportation plan and STIP for all areas of the State.'' Both statutory sections require that ''the process for developing such plans and programs shall provide for consideration of all modes of transportation and shall be continuing, cooperative, and comprehensive.'' The MPOs and States use metropolitan and statewide plans, TIPs, and STIPs as the basis for investing Federal and non-Federal capital funds for transportation infrastructure investments. (**Note:** Paperwork Reduction Act requirements for preparation of the STIP are covered by OMB control number 2125–0039.)

Part 450, title 23, Code of Federal Regulations implements these statutory requirements. (**Note:** 23 CFR part 450 is identical to, and cross-referenced by, the equivalent regulation in Title 49, 49 CFR part 613.) The MPO, together with the State and public transportation operators, prepares plans for each urbanized area, while the State develops a statewide plan, which, in metropolitan areas, is developed in cooperation with affected MPOs. These plans form the basis for development of TIPs and STIPs, the short-range programming documents for federally funded transportation capital investments.

A UPWP is required by 23 CFR 450.308 for all MPOs in TMAs. The MPOs in urbanized areas of less than 200,000 population, with prior approval by the State, FTA, and FHWA, may use a simplified statement of work as their planning grant application instead of developing a full UPWP. Details of the required planning processes supported by FTA and FHWA metropolitan planning funds, as required by Section 5303 of Title 49 U.S.C. and 23 U.S.C. 134, are set out in 23 CFR part 450. The planning grant application is based upon the UPWP and is the mechanism by which grantees request Federal funding. The information contained in the UPWP is necessary to establish the eligibility of the activities for which funding is being requested.

Preparation of UPWPs, project listing for SP&R funding, metropolitan and statewide plans, TIPs, and STIPs are essential components of decisionmaking by State and local officials for planning and programming Federal transportation dollars to support the priority transportation investment needs of their areas. In addition to serving as the grant application by States for FHWA and FTA planning funds in metropolitan areas, UPWPs are used by FTA and FHWA on a national scale to establish national out year budgets and regional program plans, develop policy on using funds, monitor State and local consistency with national planning and technical emphasis areas, respond to congressional inquiries, prepare congressional testimony, and ensure efficiency in the use and expenditure of Federal funds by determining that planning proposals are reasonable, cost effective, and supportive of full compliance with all applicable Federal law and regulations.

Sections 5303 and 5304 of 49 U.S.C. and Sections 134 and 135 of 23 U.S.C. require the development of plans and programs in all urbanized areas and entire States respectively. After approval by the Governor and MPO, metropolitan TIPs in attainment areas are to be incorporated directly into the STIP. For nonattainment and maintenance areas, as required by the Clean Air Act Amendments of 1990, FTA and FHWA must make a conformity finding on these areas' plans and TIPs before TIPs are incorporated into STIPs.

The complete STIP is then jointly reviewed and approved (or disapproved) by FTA and FHWA. With that action comes a joint determination, or finding, by FTA and FHWA that metropolitan and statewide planning

processes are in compliance with all applicable Federal laws and regulations. These planning ''findings,'' conformity determinations, and approval actions constitute the determination that State and metropolitan area transportation planning processes are complying with Federal law and regulatory requirements as a condition of eligibility for receiving Federal-aid. Without the supporting documents, these ''findings'' and planning approvals cannot be made as the basis for making project-level grant awards. Since a STIP/TIP is made up of various types of capital and non-capital surface transportation projects, from equipment acquisition to major highway and transitway construction, it is essential that these projects be identified and described. Estimated cost—since the STIP/TIP is the basis for subsequent programming and obligation of both Federal-aid highway and FTA capital funds, there must be an indication of project cost and Federal funds required. Source of Federal funds—The STIP/TIP is an integrated FTA/FHWA program. Because both agencies have several statutory sources of funds, each with different eligibility requirements, it is necessary to know what projects are proposed to be funded from which fund. Identification of the recipient—because the STIP/TIP is an integrated program of highway and transit improvements, many potential capital grant recipients have projects included in the document. For FTA funding, it is necessary that each individual project be identified as to the likely capital grant applicant. The STIP/TIP requirement reduces the burden to potential capital grant applicants by imposing the programming requirements at one point and setting one response to these requirements.

The SP&R program, UPWP, metropolitan and statewide plan, TIP, and STIP are adaptable to computer generation and revision. Both FTA and FHWA have extensive technical assistance programs encouraging application of computer techniques. These programs reduce burden by achieving time-savings in technical analysis, report revisions, and clerical activities through automation.

While the transit and highway funding programs for planning and project implementation are unique to FTA and FHWA, FTA and FHWA cooperate to avoid duplication of effort. Most visible is consolidating FTA and FHWA statutory requirements for planning through the issuance of joint planning regulations. The MPOs and States prepare a single set of UPWPs, plans, TIPs, and STIPs to satisfy both FTA and FHWA requirements.

The information contained in projects proposed for funding under the SP&R programs, UPWPs, metropolitan and State plans, TIPs, and STIPs are not contained in any other federally required document. However, where this information is already contained in State and local planning documents, FHWA and FTA can accept those documents provided that all FHWA and FTA requirements are met, thus further reducing any duplication and unnecessary burden. The SP&R programs, statewide plans, STIPs, UPWPs, metropolitan plans and TIPs have been submitted to FTA and FHWA for many years to support funding of the transportation planning and capital improvement programs for urbanized and non-urbanized areas. Continuing contact between each of FTA's grantees and FTA regional staff as well as FHWA's division office staff and State DOTs and MPOs provides opportunity for grantees to seek changes. No major problems have developed regarding this requirement. The FHWA and the FTA have not received a petition to establish, amend, or repeal a regulation pursuant to 49 CFR 106.31. A 60-day **Federal Register** Notice on information collection was published on November 22, 2013 (78 FR 70094), soliciting comments prior to submission to OMB. The DOT received comments from the Florida Department of Transportation and the American Association of State Highway and Transportation Officials (AASHTO). Both expressed concern that many respondents will exceed the 8,017 burden hours per respondent estimated in the Notice of Request for Revision of an Approved Information Collection. The DOT concurs that some States and MPOs may exceed the estimated 8,017 average burden hours to meet the metropolitan and statewide transportation planning requirements. This is because the burden hour estimate based upon the average for all MPOs and States.

A 30-day **Federal Register** notice was published on January 29, 2014 (79 FR 4808).

The following summarizes in tabular form the estimated burden hours for the collection of information for the purposes of developing and completing UPWPs, metropolitan and statewide transportation plans, and TIPs/STIPs and an explanation of the methodology used to calculate the number of hours required per submission.

UNIFIED PLANNING WORK PROGRAMS (UPWPS)—CURRENT REGULATION

Urbanized area (UZA) population	Total number of entities	Burden annual submissions	Total annual hours per submission	Burden hours
Under 200,000	210	210	200	63,000
Over 200,000	210	210	300	42,000
Total	420	420	.....	105,000

TRANSPORTATION IMPROVEMENT PROGRAMS (TIPS AND STIPS)—CURRENT REGULATION

Entity	Number of entities	Average annual submissions	Burden hours per submission	Total annual burden hours
MPOs in Attainment Areas	181	45	8,135	366,066
MPOs in Nonattainment and Maintenance Areas	239	60	11,330	679,837
State DOTs	52	13	17,868	232,284
Total	472	118	.....	1,278,187

TRANSPORTATION PLANS—CURRENT REGULATION

Entity	Number of entities	Average annual submissions	Burden hours per submission	Total annual burden hours
MPOs in Attainment Areas	181	36	19,503	702,092
MPOs in Nonattainment or Maintenance Areas	239	60	21,731	1,303,885
State DOTs	52	13	30,068	390,881
Total	472	109		2,396,858

The respondent's cost is the cost of the MPOs' and State agencies' staff time required to compile and produce the UPWP. The UPWPs must be developed identifying work activities over the next 1- or 2-year period. Given the complex nature of the planning requirements, we estimate that an average of 300 hours per respondent will be required by MPOs to prepare UPWPs in TMAs and 200 hours per respondent in non-TMAs. Note that although 23 CFR 450.308 allows MPOs in the 210 non-TMAs to prepare simplified statements of work, FTA and FHWA know of no MPOs that are developing such simplified statements. Using a staff salary of $31.62 (based on annual staff salary of $65,760) per hour total respondent cost is estimated at $3,320,100. Assuming a 54 percent overhead rate, the total annualized cost with overhead is estimated to be $5,112,954.

The OMB has previously approved the burden on respondents to develop State (SPR) work programs under FHWA control number 2125–0039.

Metropolitan TIPs are prepared by MPOs in cooperation with the State and local public transportation operators. The TIPs are required every 4 years; plans in nonattainment and maintenance areas must be updated and submitted to FTA/FHWA every 4 years and in attainment areas every 5 years. Although the requirements for metropolitan TIPs and plans, particularly in nonattainment and maintenance areas, are complex, current burden estimates have been generated from past experiences, informal discussion with both FTA/FHWA field staff and respondents, and a comparison of recent trends in the allocation of resources by respondents to meet the requirements. We estimate that MPOs in attainment areas will spend approximately 8,135 person hours in the development of the TIP document. Furthermore, considering the more stringent requirements relating to the implementation of Transportation Control Measures in nonattainment and maintenance areas and the fact that most of these areas are in the Nation's largest metropolitan areas with the most projects to program, we estimate that an average of 11,330 person hours per submission are required for these TIPs.

The development by States of a STIP draws heavily on the work cooperatively done by MPOs and States in the preparation of metropolitan TIPs. This work burden has already been calculated in this section; however, to the extent that STIPs must reflect the programming of transportation projects in nonmetropolitan areas, there exists some marginal burden in the development of the overall statewide program. We estimate that burden at 17,868 person hours is required for each STIP.

Total respondent burden hours for the TIP/STIP development is estimated to be 1,278,187. Total respondent cost for TIP/STIP development without overhead is estimated to be $40,416,518. Total respondent cost for TIP/STIP development assuming a 54 percent overhead rate is estimated to be $62,241,438. The Joint Planning Regulations require that plans in nonattainment and maintenance areas be updated and submitted to FTA/FHWA every 4 years and that plans in attainment areas be updated every 5 years. The development by States of a statewide plan draws heavily on the work cooperatively done by MPOs and States in the preparation of metropolitan TIPs and plans. This work burden has already been calculated in this section; however, to the extent that statewide plans must reflect the planning of transportation projects in nonmetropolitan areas, there exists some marginal burden in the development of the overall plan. We estimate that burden at 21,731 person hours are required for the preparation of the plan in a non-attainment area. These plans are updated every 4 years. We estimate that burden at 19,503 person hours are required for the preparation of the plan in an attainment area. These plans are updated every 5 years. Assuming an average rate of $31.62/hour we estimate that the respondent cost for the metropolitan plan is $63,428,993 and for the statewide plan is $12,359,657.

Total respondent burden hours for the plan development by States and MPOs is estimated to be 2,396,858. Total respondent cost for plan development without overhead is estimated to be $75,788,650. Total respondent cost for plan development assuming a 54 percent overhead rate is estimated to be $116,714,521.

There are no capital or start-up costs associated directly with the collection of information required by the UPWPs, TIPs/STIPs, and plans. Any capital equipment used to provide this information in most cases would have been purchased to carry out general transportation and air quality planning activities. The total annual overhead (operation and maintenance costs) of providing the requested information is $64,459,978 as calculated in the table below:

TOTAL ANNUAL BURDEN COSTS TO THE MPOS AND THE STATES

Task	Total costs with overhead	Total costs without overhead
UPWP	$5,112,954	$3,320,100
TIP	50,925,017	33,071,100
Metropolitan Plans	97,671,020	63,428,993
STIPs	11,309,908	7,344,820
Statewide Plans	19,031,996	12,359,657

TOTAL ANNUAL BURDEN COSTS TO THE MPOS AND THE STATES—Continued

Task	Total costs with overhead	Total costs without overhead
Total	184,050,895	119,525,023

TOTAL ANNUAL BURDEN HOURS TO THE MPOS AND THE STATES

Task	Total burden hours
UPWP	105,000
TIP	1,045,892
Metropolitan Plans	2,005,977
STIPs	232,284
Statewide Plans	390,881
Total	3,780,045

Please note that each State DOT also submits a statewide planning and research work program, which serves as the basis of the State's application for Federal financial assistance for planning and research activities. The information collection requirements of the State planning and research work program have been previously approved by OMB under FHWA control number 2125–0039.

This justification includes estimates of burden hours and costs to complete the major planning products required by the Statewide and Nonmetropolitan Transportation Planning and Metropolitan Transportation Planning regulations that are significantly different than the estimates provided in the previous four information collection justifications submitted to OMB. The estimates included in this justification reflect the baseline estimates of burden hours and costs developed for the Regulatory Impact Analysis (RIA) prepared as part of this Joint NPRM for the Metropolitan Transportation Planning Program and the Statewide and Nonmetropolitan Planning Program to implement provisions of MAP–21. To develop the baseline for the RIA, FHWA and FTA estimated the current average costs for specific MPO planning functions on the basis of costs identified through a sample of MPO annual work programs. The FHWA and FTA sampled a total of 17 TMAs and 12 non-TMA MPOs and used this sample to calculate costs for States and MPOs. Historically, FTA and FHWA have used an estimation methodology, not based on sampling, to estimate the burden hours required of MPOs and States to meet the planning requirements. This methodology assumed very limited increase in the costs of developing the planning products.

Additional Burden Hours Associated With These Proposed Rules

The FHWA and FTA conducted an analysis of the additional annual burden hours of work for the States, MPOs, and providers of public transportation that are associated with their implementation of the proposed changes to the planning process. The proposed changes to the planning process that impact the average annual burden hours of effort include: A transition to a performance-based (statewide and metropolitan) planning and programming process, cooperation by the State with local officials or RTPOs, if applicable, when conducting the statewide transportation planning process, and including representation by providers of public transportation on MPOs that serve TMAs. The FHWA and the FTA assumed that this additional work will increase the annual cost of preparing a long-range transportation plan and STIP/TIP by the State, the MPOs, and the providers of public transportation by 15 percent, on average. These burden hours of effort were calculated using the same labor wage rates and overhead rates that were used in the baseline paperwork reduction act analysis.

SUMMARY OF AVERAGE ANNUAL REGULATORY COSTS AND BURDEN HOURS OF EFFORT RESULTING FROM THE CHANGES PROPOSED IN THIS RULE

Entity	Total additional cost	Non-Federal share (20%)	Average additional person hours per agency
TMA MPOs (210)	$18,402,300	$3,680,500	1,800
Non-TMA MPOs (210)	3,909,200	781,800	400
States (52)	6,075,800	1,215,200	2,400
Providers of Public Transportation (600)	2,440,000	488,000	100
Total	30,827,300	6,165,500	

As shown in the above table, the proposed changes to the rule would have a total estimated cost increase of $30,827,300 per year for the States, MPOs, and providers of public transportation. When converted to burden hours, that equates to an additional 1,800 hours of annual burden for each TMA MPO, 400 additional hours of annual burden hours for each non TMA–MPO, 2,400 annual burden hours for each State, and 100 annual burden hours for each provider of public transportation.

FHWA and FTA Seek Public Comments on the Information Collection Associated With These Proposed Rules

Public Comments Invited: You are asked to comment on any aspect of this information collection, including: (1) Whether the proposed collection is necessary for the DOT's performance; (2) the accuracy of the estimated burdens; (3) ways for the DOT to enhance the quality, usefulness, and clarity of the collected information; and (4) ways that the burden could be minimized, including the use of electronic technology, without reducing the quality of the collected information. The agency will summarize and/or include your comments in the request for OMB's clearance of this information collection.

National Environmental Policy Act

Federal agencies are required to adopt implementing procedures for NEPA that establish specific criteria for, and identification of, three classes of actions: those that normally require preparation of an Environmental Impact Statement, those that normally require preparation of an Environmental Assessment, and those that are categorically excluded from further NEPA review (40 CFR 1507.3(b)). This proposed action qualifies for categorical exclusions under 23 CFR 771.117(c)(20) (promulgation of rules, regulations, and directives) and 771.117(c)(1) (activities that do not lead directly to construction) for FHWA, and 23 CFR 771.118(c)(4) (planning and administrative activities which do not involve or lead directly to construction) for FTA. The Agencies have evaluated whether the proposed action would involve unusual circumstances or extraordinary circumstances and have determined that this proposed action would not involve such circumstances.

The proposed rule provides the policies and requirements for statewide and metropolitan transportation plans and transportation improvement programs. The proposed rule follows closely the requirements in 23 U.S.C. 134 and 135 and 49 U.S.C. 5303 and 5304. In addition, sections 134(q), 135(k), and 168(f)(1) of title 23, U.S.C., and sections 5303(q) and 5304(j) of title 49, U.S.C., establish that NEPA does not apply to decisions by the Secretary concerning a metropolitan or statewide transportation plan or transportation improvement programs under those sections.

Executive Order 11988 (Floodplain Management)

The FHWA and FTA have evaluated this action under Executive Order 11988, Floodplain Management. The agencies have determined that this action does not have an adverse impact associated with the occupancy and modification of floodplains and does not provide direct or indirect support of floodplain development. These proposed regulations do provide the State DOTs and the MPOs with the option of developing a programmatic mitigation plan as part of the transportation planning process, and floodplains could be one of the resources evaluated as part of these programmatic mitigation plans to help the States and MPOs avoid or minimize impacts to flood plains by future projects. These proposed regulations also encourage early coordination by State DOTs and MPOs with Federal and State environmental resource agencies during the planning process to identify environmental resources in the interest of avoiding or minimizing impacts. When FHWA and FTA make a future funding or other approval decision on a project basis, they consider floodplain management at that point.

Executive Order 13653 (Climate Preparedness and Resilience)

The FHWA and FTA have evaluated this action under Executive Order 13653, Climate Preparedness and Resilience. The FHWA and FTA have determined that this proposed rule provides an optional means where State DOTs and MPOs could consider the effects of climate change and resilience in the context of the transportation planning process, such as during the development of statewide or metropolitan transportation plans. Scenario planning, which is discussed in these regulations as an optional tool for aiding MPOs in their development of the metropolitan transportation plan, is another option where MPOs could consider climate change and resilience as part of scenarios evaluated during the development of the metropolitan transportation plan. The FHWA and FTA have determined that these proposed regulations, if finalized as proposed, could provide an optional means for States and MPOs to assess climate change and resilience as part of the transportation planning process.

Executive Order 12988 (Civil Justice Reform)

This action meets applicable standards in sections 3(a) and 3(b)(2) of Executive Order 12988, Civil Justice Reform, to minimize litigation, eliminate ambiguity, and reduce burden.

Executive Order 13045 (Protection of Children)

We have analyzed this action under Executive Order 13045, Protection of Children from Environmental Health Risks and Safety Risks. This rule is not an economically significant rule and does not concern an environmental risk to health or safety that may disproportionately affect children.

Executive Order 12630 (Taking of Private Property)

This rule would not effect a taking of private property or otherwise have taking implications under Executive Order 12630, Governmental Actions and Interference with Constitutionally Protected Property Rights.

Executive Order 13175 (Tribal Consultation)

The FHWA and FTA have analyzed this action under Executive Order 13175, dated November 6, 2000, and believe that the proposed action would not have substantial direct effects on one or more Indian tribes, would not impose substantial direct compliance costs on Indian tribal governments, and would not preempt tribal laws. The planning regulations contain requirements for States to consult with Indian tribal governments in the planning process. Tribes are required under 25 CFR part 170 to develop long-range plans and develop an Indian Tribal Transportation Program (TTP) for programming TTP projects. However, the requirements in 25 CFR part 170 would not be changed by this rulemaking. Therefore, a tribal summary impact statement is not required.

Executive Order 13211 (Energy Effects)

We have analyzed this action under Executive Order 13211, Actions Concerning Regulations That Significantly Affect Energy Supply, Distribution, or Use dated May 18, 2001. We have determined that it is not a significant energy action under that order because, although it is a significant regulatory action under Executive Order 12866, it is not likely to have a significant adverse effect on the supply, distribution, or use of energy. Therefore, a Statement of Energy Effects is not required.

Executive Order 5610.2(a) (Environmental Justice)

Executive Order 12898, Federal Actions to Address Environmental Justice in Minority Populations and Low-Income Populations, and DOT Order 5610.2(a), 91 FR 27534 (May 10, 2012) (available online at *http://www.fhwa.dot.gov/environment/environmental_justice/ej_at_dot/order_56102a/index.cfm)* require DOT agencies to achieve environmental justice (EJ) as part of their mission by identifying and addressing, as appropriate, disproportionately high and adverse human health or environmental effects, including interrelated social and economic effects, of their programs, policies, and activities on minority populations and low-income populations in the United States. The DOT Order requires DOT agencies to address compliance with the Executive Order 12898 and the DOT Order in all rulemaking activities. In addition, FHWA and FTA have issued additional documents relating to administration of the Executive Order

12898 and the DOT Order. On June 14, 2012, FHWA issued an update to its EJ order, FHWA Order 6640.23A, FHWA Actions to Address Environmental Justice in Minority Populations and Low Income Populations (the FHWA Order) (available online at *http://www.fhwa.dot.gov/legsregs/directives/orders/664023a.htm*). On August 15, 2012, FTA's Circular 4703.1 became effective, which contains guidance for States and MPOs to incorporate EJ into their planning processes (available online at *http://www.fta.dot.gov/documents/FTA_EJ_Circular_7.14-12_FINAL.pdf*).

The FHWA and FTA have evaluated this proposed rule under the Executive Order, the DOT Order, the FHWA Order, and the FTA Circular. Environmental justice principles, in the context of planning, should be considered when the planning process is being implemented at the State and local level. As part of their stewardship and oversight of the federally aided transportation planning process of the States, transit agencies, and MPOs, FHWA and FTA encourage these entities to incorporate EJ principles into the statewide and metropolitan planning processes and documents as appropriate consistent with the applicable Orders and the FTA Circular. When FHWA and FTA make a future funding or other approval decision on a project basis, they consider EJ at that point.

Nothing inherent in these proposed regulations would disproportionately impact minority or low income populations. The proposed regulations would establish procedures and other requirements to guide future State and local decisionmaking on programs and projects. Neither the regulations nor Sections 134 and 135 of title 23 dictate the outcome of those decisions. The FHWA and FTA have determined that these proposed regulations, if finalized as proposed, would not cause disproportionately high and adverse human health and environmental effects on minority or low income populations.

Regulation Identification Number

A regulation identification number (RIN) is assigned to each regulatory action listed in the Unified Agenda of Federal Regulations. The Regulatory Information Service Center publishes the Unified Agenda in April and October of each year. The RIN contained in the heading of this document can be used to cross-reference this action with the Unified Agenda.

List of Subjects

23 CFR Part 450

Grant programs—transportation, Highway and roads, Mass transportation, Reporting and record keeping requirements.

49 CFR Part 613

Grant programs—transportation, Highways and roads, Mass transportation.

Issued in Washington, DC, on May 21, 2014, under authority delegated in 49 CFR 1.85 and 1.91.

Gregory G. Nadeau,

Deputy Administrator, Federal Highway Administration.

Therese W. McMillan,

Deputy Administrator, Federal Transit Administration.

In consideration of the foregoing, the FHWA and FTA propose to amend title 23, Code of Federal Regulations, part 450, and title 49, Code of Federal Regulations, part 613, as set forth below:

TITLE 23—HIGHWAYS

■ 1. Revise part 450 to read as follows:

PART 450—PLANNING ASSISTANCE AND STANDARDS

Subpart A—Transportation Planning and Programming Definitions

Sec.
450.100 Purpose.
450.102 Applicability.
450.104 Definitions.

Subpart B—Statewide and Nonmetropolitan Transportation Planning and Programming

450.200 Purpose.
450.202 Applicability.
450.204 Definitions.
450.206 Scope of the statewide and nonmetropolitan transportation planning process.
450.208 Coordination of planning process activities.
450.210 Interested parties, public involvement, and consultation.
450.212 Transportation planning studies and project development.
450.214 Development of programmatic mitigation plans.
450.216 Development and content of the long-range statewide transportation plan.
450.218 Development and content of the statewide transportation improvement program (STIP).
450.220 Self-certifications, Federal findings, and Federal approvals.
450.222 Project selection from the STIP.
450.224 Applicability of NEPA to statewide transportation plans and programs.
450.226 Phase-in of new requirements.

Subpart C—Metropolitan Transportation Planning and Programming

450.300 Purpose.
450.302 Applicability.
450.304 Definitions.
450.306 Scope of the metropolitan transportation planning process.
450.308 Funding for transportation planning and unified planning work programs.
450.310 Metropolitan planning organization designation and redesignation.
450.312 Metropolitan planning area boundaries.
450.314 Metropolitan planning agreements.
450.316 Interested parties, participation, and consultation.
450.318 Transportation planning studies and project development.
450.320 Development of programmatic mitigation plans.
450.322 Congestion management process in transportation management areas.
450.324 Development and content of the metropolitan transportation plan.
450.326 Development and content of the transportation improvement program (TIP).
450.328 TIP revisions and relationship to the STIP.
450.330 TIP action by the FHWA and the FTA.
450.332 Project selection from the TIP.
450.334 Annual listing of obligated projects.
450.336 Self-certifications and Federal certifications.
450.338 Applicability of NEPA to metropolitan transportation plans and programs.
450.340 Phase-in of new requirements.

Appendix A to Part 450—Linking the Transportation Planning and NEPA Processes

Authority: 23 U.S.C. 134 and 135; 42 U.S.C. 7410 et seq.; 49 U.S.C. 5303 and 5304; 49 CFR 1.85 and 1.90.

Subpart A—Transportation Planning and Programming Definitions

§ 450.100 Purpose.

The purpose of this subpart is to provide definitions for terms used in this part.

§ 450.102 Applicability.

The definitions in this subpart are applicable to this part, except as otherwise provided.

§ 450.104 Definitions.

Unless otherwise specified, the definitions in 23 U.S.C. 101(a) and 49 U.S.C. 5302 are applicable to this part.

Administrative modification means a minor revision to a long-range statewide or metropolitan transportation plan, Transportation Improvement Program (TIP), or Statewide Transportation Improvement Program (STIP) that includes minor changes to project/project phase costs, minor changes to funding sources of previously included projects, and minor changes to project/project phase initiation dates. An administrative modification is a revision

that does not require public review and comment, a redemonstration of fiscal constraint, or a conformity determination (in nonattainment and maintenance areas).

Amendment means a revision to a long-range statewide or metropolitan transportation plan, TIP, or STIP that involves a major change to a project included in a metropolitan transportation plan, TIP, or STIP, including the addition or deletion of a project or a major change in project cost, project/project phase initiation dates, or a major change in design concept or design scope (e.g., changing project termini or the number of through traffic lanes or changing the number of stations in the case of fixed guideway transit projects). Changes to projects that are included only for illustrative purposes do not require an amendment. An amendment is a revision that requires public review and comment and a redemonstration of fiscal constraint. If an amendment involves ''non-exempt'' projects in nonattainment and maintenance areas, a conformity determination is required.

Asset management means a strategic and systematic process of operating, maintaining, and improving physical assets, with a focus on both engineering and economic analysis based upon quality information, to identify a structured sequence of maintenance, preservation, repair, rehabilitation, and replacement actions that will achieve and sustain a desired state of good repair over the lifecycle of the assets at minimum practicable cost.

Attainment area means any geographic area in which levels of a given criteria air pollutant (e.g., ozone, carbon monoxide, PM_{10}, $PM_{2.5}$, and nitrogen dioxide) meet the health-based National Ambient Air Quality Standards (NAAQS) for that pollutant. An area may be an attainment area for one pollutant and a nonattainment area for others. A ''maintenance area'' (see definition below) is not considered an attainment area for transportation planning purposes.

Available funds means funds derived from an existing source dedicated to or historically used for transportation purposes. For Federal funds, authorized and/or appropriated funds and the extrapolation of formula and discretionary funds at historic rates of increase are considered ''available.'' A similar approach may be used for State and local funds that are dedicated to or historically used for transportation purposes.

Committed funds means funds that have been dedicated or obligated for transportation purposes. For State funds that are not dedicated to transportation purposes, only those funds over which the Governor has control may be considered ''committed.'' Approval of a TIP by the Governor is considered a commitment of those funds over which the Governor has control. For local or private sources of funds not dedicated to or historically used for transportation purposes (including donations of property), a commitment in writing (e.g., letter of intent) by the responsible official or body having control of the funds may be considered a commitment. For projects involving 49 U.S.C. 5309 funding, execution of a Full Funding Grant Agreement (or equivalent) or an Expedited Grant Agreement (or equivalent) with the DOT shall be considered a multiyear commitment of Federal funds.

Conformity means a Clean Air Act (42 U.S.C. 7506(c)) requirement that ensures that Federal funding and approval are given to transportation plans, programs and projects that are consistent with the air quality goals established by a State Implementation Plan (SIP). Conformity to the purpose of the SIP means that transportation activities will not cause new air quality violations, worsen existing violations, or delay timely attainment of the NAAQS or any required interim emission reductions or other milestones in any area. The transportation conformity regulations (40 CFR part 93, subpart A) sets forth policy, criteria, and procedures for demonstrating and assuring conformity of transportation activities.

Conformity lapse means, pursuant to section 176(c) of the Clean Air Act (42 U.S.C. 7506(c)), as amended, that the conformity determination for a metropolitan transportation plan or TIP has expired and thus there is no currently conforming metropolitan transportation plan or TIP.

Congestion Management Process means a systematic approach required in transportation management areas (TMAs) that provides for effective management and operation, based on a cooperatively developed and implemented metropolitan-wide strategy, of new and existing transportation facilities eligible for funding under title 23 U.S.C., and title 49 U.S.C., through the use of travel demand reduction and operational management strategies.

Consideration means that one or more parties takes into account the opinions, action, consequences, and relevant information from other parties in making a decision or determining a course of action.

Consultation means that one or more parties confer with other identified parties in accordance with an established process and, prior to taking action(s), considers the views of the other parties and periodically informs them about action(s) taken. This definition does not apply to the ''consultation'' performed by the States and the Metropolitan Planning Organizations (MPOs) in comparing the long-range statewide transportation plan and the metropolitan transportation plan, respectively, to State and tribal conservation plans or maps or inventories of natural or historic resources (see § 450.216(j) and § 450.324(g)(1) and (g)(2)).

Cooperation means that the parties involved in carrying out the transportation planning and programming processes work together to achieve a common goal or objective.

Coordinated public transit-human services transportation plan means a locally developed, coordinated transportation plan that identifies the transportation needs of individuals with disabilities, older adults, and people with low incomes, provides strategies for meeting those local needs, and prioritizes transportation services for funding and implementation.

Coordination means the cooperative development of plans, programs, and schedules among agencies and entities with legal standing and adjustment of such plans, programs, and schedules to achieve general consistency, as appropriate.

Design concept means the type of facility identified for a transportation improvement project (e.g., freeway, expressway, arterial highway, grade-separated highway, toll road, reserved right-of-way rail transit, mixed-traffic rail transit, or busway).

Design scope means the aspects that will affect the proposed facility's impact on the region, usually as they relate to vehicle or person carrying capacity and control (e.g., number of lanes or tracks to be constructed or added, length of project, signalization, safety features, access control including approximate number and location of interchanges, or preferential treatment for high-occupancy vehicles).

Designated recipient means an entity designated, in accordance with the planning process under 49 U.S.C. 5303 and 5304, by the Governor of a State, responsible local officials, and publicly owned operators of public transportation, to receive and apportion amounts under 49 U.S.C. 5336 that are attributable to urbanized areas of 200,000 or more in population, or a State or regional authority if the authority is responsible under the laws of a State for a capital project and for

financing and directly providing public transportation.

Environmental mitigation activities means strategies, policies, programs, and actions that, over time, will serve to avoid, minimize, rectify, reduce or eliminate impacts to environmental resources associated with the implementation of a long-range statewide transportation plan or metropolitan transportation plan.

Expedited Grant Agreement (EGA) means a contract that defines the scope of a Small Starts project, the Federal financial contribution, and other terms and conditions, in accordance with 49 U.S.C. 5309(h)(7).

Federal land management agency means units of the Federal Government currently responsible for the administration of public lands (e.g., U.S. Forest Service, U.S. Fish and Wildlife Service, Bureau of Land Management, and the National Park Service).

Federally funded non-emergency transportation services means transportation services provided to the general public, including those with special transport needs, by public transit, private non-profit service providers, and private third-party contractors to public agencies.

Financial plan means documentation required to be included with a metropolitan transportation plan and TIP (and optional for the long-range statewide transportation plan and STIP) that demonstrates the consistency between reasonably available and projected sources of Federal, State, local, and private revenues and the costs of implementing proposed transportation system improvements.

Financially constrained or Fiscal constraint means that the metropolitan transportation plan, TIP, and STIP includes sufficient financial information for demonstrating that projects in the metropolitan transportation plan, TIP, and STIP can be implemented using committed, available, or reasonably available revenue sources, with reasonable assurance that the federally supported transportation system is being adequately operated and maintained. For the TIP and the STIP, financial constraint/fiscal constraint applies to each program year. Additionally, projects in air quality nonattainment and maintenance areas can be included in the first 2 years of the TIP and STIP only if funds are ''available'' or ''committed.''

Freight shippers means any entity that routinely transport cargo from one location to another by providers of freight transportation services or by their own operations, involving one or more travel modes.

Full Funding Grant Agreement (FFGA) means an instrument that defines the scope of a project, the Federal financial contribution, and other terms and conditions for funding New Starts projects as required by 49 U.S.C. 5309(k)(2).

Governor means the Governor of any of the 50 States or the Commonwealth of Puerto Rico or the Mayor of the District of Columbia.

Highway Safety Improvement Program (HSIP) means a State safety program to implement the provisions of 23 U.S.C. 130 and 148, including the development of a Strategic Highway Safety Plan (SHSP), Railway-Highway Crossings Program and program of highway safety improvement projects.

Illustrative project means an additional transportation project that may be included in a financial plan for a metropolitan transportation plan, TIP, or STIP if reasonable additional resources were to become available.

Indian Tribal government means a duly formed governing body for an Indian or Alaska Native tribe, band, nation, pueblo, village, or community that the Secretary of the Interior acknowledges to exist as an Indian Tribe pursuant to the Federally Recognized Indian Tribe List Act of 1994, Public Law 103–454.

Intelligent Transportation System (ITS) means electronics, photonics, communications, or information processing used singly or in combination to improve the efficiency or safety of a surface transportation system.

Interim metropolitan transportation plan means a transportation plan composed of projects eligible to proceed under a conformity lapse and otherwise meeting all other applicable provisions of this part, including approval by the MPO.

Interim Transportation Improvement Program (TIP) means a TIP composed of projects eligible to proceed under a conformity lapse and otherwise meeting all other applicable provisions of this part, including approval by the MPO and the Governor.

Local official means elected or appointed officials of general purpose local government with responsibility for transportation.

Long-range statewide transportation plan means the official, statewide, multimodal, transportation plan covering a period of no less than 20 years developed through the statewide transportation planning process.

Maintenance area means any geographic region of the United States that the Environmental Protection Agency (EPA) previously designated as a nonattainment area for one or more pollutants pursuant to the Clean Air Act Amendments of 1990, and subsequently redesignated as an attainment area subject to the requirement to develop a maintenance plan under section 175A of the Clean Air Act, as amended (42 U.S.C. 7505a).

Major modes of transportation means those forms of transportation administered, managed, owned, or operated by public agencies or authorities that provide transportation services open to the public for the movement of people and goods or as operated by the private sector on behalf of a public agency owned facility.

Management system means a systematic process, designed to assist decision makers in selecting cost effective strategies/actions to improve the efficiency or safety of, and protect the investment in the nation's infrastructure. A management system can include: identification of performance measures; data collection and analysis; determination of needs; evaluation and selection of appropriate strategies/actions to address the needs; and evaluation of the effectiveness of the implemented strategies/actions.

Metropolitan Planning Agreement means a written agreement between the MPO, the State(s), and the providers of public transportation serving the metropolitan planning area that describes how they will work cooperatively to meet their mutual responsibilities in carrying out the metropolitan transportation planning process.

Metropolitan Planning Area (MPA) means the geographic area determined by agreement between the MPO for the area and the Governor, in which the metropolitan transportation planning process is carried out.

Metropolitan Planning Organization (MPO) means the policy board of an organization created and designated to carry out the metropolitan transportation planning process.

Metropolitan Transportation Plan means the official multimodal transportation plan addressing no less than a 20-year planning horizon that the MPO develops, adopts, and updates through the metropolitan transportation planning process.

National Ambient Air Quality Standard (NAAQS) means those standards established pursuant to section 109 of the Clean Air Act (42 U.S.C. 7409).

Nonattainment area means any geographic region of the United States that EPA designates as a nonattainment area under section 107 of the Clean Air

Act (42 U.S.C. 7407) for any pollutants for which an NAAQS exists.

Nonmetropolitan area means a geographic area outside a designated metropolitan planning area.

Nonmetropolitan local officials means elected and appointed officials of general purpose local government in a nonmetropolitan area with responsibility for transportation.

Obligated projects means strategies and projects funded under title 23 U.S.C. and title 49 U.S.C. Chapter 53 for which the State or designated recipient authorized and committed the supporting Federal funds in preceding or current program years, and authorized by the FHWA or awarded as a grant by the FTA.

Operational and management strategies means actions and strategies aimed at improving the performance of existing and planned transportation facilities to relieve congestion and maximize the safety and mobility of people and goods.

Performance measure is as defined in 23 CFR 490.XXX and 49 CFR XXX.XXX.

Performance metric is as defined in 23 CFR 490.XXX and 49 CFR XXX.XXX.

Performance target is as defined in 23 CFR 490.XXX and 49 CFR XXX.XXX.

Project selection means the procedures followed by MPOs, States, and public transportation operators to advance projects from the first 4 years of an approved TIP and/or STIP to implementation, in accordance with agreed upon procedures.

Provider of freight transportation services means any entity that transports or otherwise facilitates the movement of cargo from one location to another for others or for itself.

Public transportation agency safety plan means a comprehensive plan established by a State or recipient of funds under title 49, chapter 53 and in accordance with 49 U.S.C. 5329(d).

Public transportation operator means the public entity or government-approved authority that participates in the continuing, cooperative, and comprehensive transportation planning process in accordance with 23 U.S.C. 134 and 135 and 49 U.S.C. 5303 and 5304, and is a recipient of Federal funds under title 49 U.S.C. Chapter 53 for transportation by a conveyance that provides regular and continuing general or special transportation to the public, but does not include sightseeing, school bus, charter, certain types of shuttle service, intercity bus transportation, or intercity passenger rail transportation provided by Amtrak.

Regional ITS architecture means a regional framework for ensuring institutional agreement and technical integration for the implementation of ITS projects or groups of projects.

Regionally significant project means a transportation project (other than projects that may be grouped in the TIP and/or STIP or exempt projects as defined in EPA's transportation conformity regulations (40 CFR part 93, subpart A) that is on a facility that serves regional transportation needs (such as access to and from the area outside the region; major activity centers in the region; major planned developments such as new retail malls, sports complexes, or employment centers; or transportation terminals) and would normally be included in the modeling of the metropolitan area's transportation network. At a minimum, this includes all principal arterial highways and all fixed guideway transit facilities that offer an alternative to regional highway travel.

Regional Transportation Planning Organization (RTPO) means a policy board of nonmetropolitan local officials or their designees created to carry out the regional transportation planning process.

Revision means a change to a long-range statewide or metropolitan transportation plan, TIP, or STIP that occurs between scheduled periodic updates. A major revision is an ''amendment'' while a minor revision is an ''administrative modification.''

Scenario planning means a planning process that evaluates the effects of alternative policies, plans and/or programs on the future of a community or region. This activity should provide information to decision makers as they develop the transportation plan.

State means any one of the 50 States, the District of Columbia, or Puerto Rico.

State Implementation Plan (SIP) means, as defined in section 302(q) of the Clean Air Act (CAA) (42 U.S.C. 7602(q)), the portion (or portions) of the implementation plan, or most recent revision thereof, which has been approved under section 110 of the CAA (42 U.S.C. 7410), or promulgated under section 110(c) of the CAA (42 U.S.C. 7410(c)), or promulgated or approved pursuant to regulations promulgated under section 301(d) of the CAA (42 U.S.C. 7601(d)) and which implements the relevant requirements of the CAA.

Statewide Transportation Improvement Program (STIP) means a statewide prioritized listing/program of transportation projects covering a period of 4 years that is consistent with the long-range statewide transportation plan, metropolitan transportation plans, and TIPs, and required for projects to be eligible for funding under title 23 U.S.C. and title 49 U.S.C. Chapter 53.

Strategic Highway Safety Plan means a comprehensive multidisciplinary plan, based on safety data developed by a State DOT in accordance with the requirements of 23 U.S.C. 148.

Transit Asset Management Plan is as defined in 49 CFR XXX.XXX.

Transit Asset Management System is as defined in 49 CFR XXX.XXX.

Transportation Control Measure (TCM) means any measure that is specifically identified and committed to in the applicable SIP, including a substitute or additional TCM that is incorporated into the applicable SIP through the process established in CAA section 176(c)(8), that is either one of the types listed in section 108 of the CAA (42 U.S.C. 7408) or any other measure for the purpose of reducing emissions or concentrations of air pollutants from transportation sources by reducing vehicle use or changing traffic flow or congestion conditions. Notwithstanding the above, vehicle technology-based, fuel-based, and maintenance-based measures that control the emissions from vehicles under fixed traffic conditions are not TCMs.

Transportation Improvement Program (TIP) means a prioritized listing/program of transportation projects covering a period of 4 years that is developed and formally adopted by an MPO as part of the metropolitan transportation planning process, consistent with the metropolitan transportation plan, and required for projects to be eligible for funding under title 23 U.S.C. and title 49 U.S.C. Chapter 53.

Transportation Management Area (TMA) means an urbanized area with a population over 200,000, as defined by the Bureau of the Census and designated by the Secretary of Transportation, or any additional area where TMA designation is requested by the Governor and the MPO and designated by the Secretary of Transportation.

Unified Planning Work Program (UPWP) means a statement of work identifying the planning priorities and activities to be carried out within a metropolitan planning area. At a minimum, a UPWP includes a description of the planning work and resulting products, who will perform the work, time frames for completing the work, the cost of the work, and the source(s) of funds.

Update means making current a long-range statewide transportation plan, metropolitan transportation plan, TIP, or STIP through a comprehensive review. Updates require public review and comment, a 20-year horizon for metropolitan transportation plans and

long-range statewide transportation plans, a 4-year program period for TIPs and STIPs, demonstration of fiscal constraint (except for long-range statewide transportation plans), and a conformity determination (for metropolitan transportation plans and TIPs in nonattainment and maintenance areas).

Urbanized area (UZA) means a geographic area with a population of 50,000 or more, as designated by the Bureau of the Census.

Users of public transportation means any person, or groups representing such persons, who use transportation open to the general public, other than taxis and other privately funded and operated vehicles.

Visualization techniques means methods used by States and MPOs in the development of transportation plans and programs with the public, elected and appointed officials, and other stakeholders in a clear and easily accessible format such as GIS- or web-based surveys, inventories, maps, pictures, and/or displays identifying features such as roadway rights of way, transit, intermodal, and non-motorized transportation facilities, historic and cultural resources, natural resources, and environmentally sensitive areas, to promote improved understanding of existing or proposed transportation plans and programs.

Subpart B—Statewide and Nonmetropolitan Transportation Planning and Programming

§ 450.200 Purpose.

The purpose of this subpart is to implement the provisions of 23 U.S.C. 135, 23 U.S.C. 150, and 49 U.S.C. 5304, as amended, which require each State to carry out a continuing, cooperative, and comprehensive performance-based statewide multimodal transportation planning process, including the development of a long-range statewide transportation plan and STIP, that facilitates the safe and efficient management, operation, and development of surface transportation systems that will serve the mobility needs of people and freight (including accessible pedestrian walkways and bicycle transportation facilities) and that fosters economic growth and development within and between States and urbanized areas, while minimizing transportation-related fuel consumption and air pollution in all areas of the State, including those areas subject to the metropolitan transportation planning requirements of 23 U.S.C. 134 and 49 U.S.C. 5303.

§ 450.202 Applicability.

The provisions of this subpart are applicable to States and any other organizations or entities (e.g., MPOs, RTPOs and public transportation operators) that are responsible for satisfying the requirements for transportation plans and programs throughout the State pursuant to 23 U.S.C. 135 and 49 U.S.C. 5304.

§ 450.204 Definitions.

Except as otherwise provided in subpart A of this part, terms defined in 23 U.S.C. 101(a) and 49 U.S.C. 5302 are used in this subpart as so defined.

§ 450.206 Scope of the statewide and nonmetropolitan transportation planning process.

(a) Each State shall carry out a continuing, cooperative, and comprehensive statewide transportation planning process that provides for consideration and implementation of projects, strategies, and services that will address the following factors:

(1) Support the economic vitality of the United States, the States, metropolitan areas, and nonmetropolitan areas, especially by enabling global competitiveness, productivity, and efficiency;

(2) Increase the safety of the transportation system for motorized and non-motorized users;

(3) Increase the security of the transportation system for motorized and non-motorized users;

(4) Increase accessibility and mobility of people and freight;

(5) Protect and enhance the environment, promote energy conservation, improve the quality of life, and promote consistency between transportation improvements and State and local planned growth and economic development patterns;

(6) Enhance the integration and connectivity of the transportation system, across and between modes throughout the State, for people and freight;

(7) Promote efficient system management and operation; and

(8) Emphasize the preservation of the existing transportation system.

(b) Consideration of the planning factors in paragraph (a) of this section shall be reflected, as appropriate, in the statewide transportation planning process. The degree of consideration and analysis of the factors should be based on the scale and complexity of many issues, including transportation systems development, land use, employment, economic development, human and natural environment (including Section 4(f) properties as defined in 23 CFR 774.17), and housing and community development.

(c) *Performance-based approach.* (1) The statewide transportation planning process shall provide for the establishment and use of a performance-based approach to transportation decisionmaking to support the national goals described in 23 U.S.C. 150(b) and the general purposes described in 49 U.S.C. 5301.

(2) Each State shall select and establish performance targets in coordination with the relevant MPOs to ensure consistency to the maximum extent practicable. The targets shall address the performance areas described in 23 U.S.C. 150(c), and the measures established under 23 CFR part 490, where applicable, to use in tracking progress toward attainment of critical outcomes for the State. States shall establish performance targets that reflect the measures identified in 23 U.S.C. 150(c) not later than 1 year after the effective date of the DOT final rule on performance measures. Each State shall select and establish targets under this paragraph in accordance with the appropriate target setting framework established at 23 CFR part 490. Each State should select and establish performance targets in coordination with affected Federal Lands Management agencies, as appropriate.

(3) In areas not represented by an MPO, the selection of public transportation performance targets by a State shall be coordinated, to the maximum extent practicable, with providers of public transportation to ensure consistency with the performance targets that public transportation providers establish under 49 U.S.C. 5326(c) and 49 U.S.C. 5329(d).

(4) A State shall integrate into the statewide transportation planning process, directly or by reference, the goals, objectives, performance measures, and targets described in this section, in other State transportation plans and transportation processes, as well as any plans developed pursuant to chapter 53 of title 49 by providers of public transportation in areas not represented by an MPO required as part of a performance-based program. Examples of such plans and processes include the HSIP, SHSP, the National Highway System (NHS) Asset Management Plan, the State Freight Plan (if the State has one), the Transit Asset Management Plan, and the Public Transportation Agency Safety Plan.

(5) A State shall consider the performance measures and targets established under this paragraph when developing policies, programs, and investment priorities reflected in the

statewide transportation plan and statewide transportation improvement program.

(d) The failure to consider any factor specified in paragraph (a) or (c) of this section shall not be subject to review by any court under title 23 U.S.C., 49 U.S.C. Chapter 53, subchapter II of title 5 U.S.C. Chapter 5, or title 5 U.S.C. Chapter 7 in any matter affecting a long-range statewide transportation plan, STIP, project or strategy, or the statewide transportation planning process findings.

(e) Funds provided under 23 U.S.C. 505 and 49 U.S.C. 5305(e) are available to the State to accomplish activities described in this subpart. At the State's option, funds provided under 23 U.S.C. 104(b)(2) and 49 U.S.C. 5307, 5310, and 5311 may also be used for statewide transportation planning. A State shall document statewide transportation planning activities performed with funds provided under title 23 U.S.C. and title 49 U.S.C. Chapter 53 in a statewide planning work program in accordance with the provisions of 23 CFR part 420. The work program should include a discussion of the transportation planning priorities facing the State.

§ 450.208 Coordination of planning process activities.

(a) In carrying out the statewide transportation planning process, each State shall, at a minimum:

(1) Coordinate planning carried out under this subpart with the metropolitan transportation planning activities carried out under subpart C of this part for metropolitan areas of the State. The State is encouraged to rely on information, studies, or analyses provided by MPOs for portions of the transportation system located in metropolitan planning areas;

(2) Coordinate planning carried out under this subpart with statewide trade and economic development planning activities and related multistate planning efforts;

(3) Consider the concerns of Federal land management agencies that have jurisdiction over land within the boundaries of the State;

(4) Cooperate with affected local elected and appointed officials with responsibilities for transportation, or, if applicable, through RTPOs described in § 450.210(d) in nonmetropolitan areas;

(5) Consider the concerns of Indian Tribal governments that have jurisdiction over land within the boundaries of the State;

(6) Consider related planning activities being conducted outside of metropolitan planning areas and between States; and

(7) Coordinate data collection and analyses with MPOs and public transportation operators to support statewide transportation planning and programming priorities and decisions.

(b) The State air quality agency shall coordinate with the State department of transportation (State DOT) to develop the transportation portion of the State Implementation Plan (SIP) consistent with the Clean Air Act (42 U.S.C. 7401 et seq.).

(c) Two or more States may enter into agreements or compacts, not in conflict with any law of the United States, for cooperative efforts and mutual assistance in support of activities under this subpart related to interstate areas and localities in the States and establishing authorities the States consider desirable for making the agreements and compacts effective. The right to alter, amend, or repeal interstate compacts entered into under this part is expressly reserved.

(d) States may use any one or more of the management systems (in whole or in part) described in 23 CFR part 500.

(e) In carrying out the statewide transportation planning process, States shall apply asset management principles and techniques consistent with the NHS Asset Management Plan and the Transit Asset Management Plan, and Public Transportation Agency Safety Plan in establishing planning goals, defining STIP priorities, and assessing transportation investment decisions, including transportation system safety, operations, preservation, and maintenance.

(f) For non-NHS highways, States may apply principles and techniques consistent with other asset management plans to the transportation planning and programming processes, as appropriate.

(g) A State shall integrate the goals, objectives, performance measures, and targets from the following into the statewide transportation planning process:

(1) NHS Asset Management Plan, as defined in 23 U.S.C. 119(e), and Transit Asset Management Plan, as discussed in 49 U.S.C. 5326;

(2) Applicable portions of the HSIP, including the SHSP, as specified in 23 U.S.C. 148;

(3) Public Transportation Agency Safety Plan in 49 U.S.C. 5329(b);

(4) Other safety and security planning and review processes, plans, and programs, as appropriate;

(5) The State Freight Plan, if the State chooses to develop one; and

(6) Other State transportation plans and transportation processes required as part of a performance-based program.

(h) The statewide transportation planning process shall (to the maximum extent practicable) be consistent with the development of applicable regional intelligent transportation systems (ITS) architectures, as defined in 23 CFR part 940.

(i) Preparation of the coordinated public transit-human services transportation plan, as required by 49 U.S.C. 5310, should be coordinated and consistent with the statewide transportation planning process.

§ 450.210 Interested parties, public involvement, and consultation.

(a) In carrying out the statewide transportation planning process, including development of the long-range statewide transportation plan and the STIP, the State shall develop and use a documented public involvement process that provides opportunities for public review and comment at key decision points.

(1) The State's public involvement process at a minimum shall:

(i) Establish early and continuous public involvement opportunities that provide timely information about transportation issues and decisionmaking processes to individuals, affected public agencies, representatives of public transportation employees, freight shippers, private providers of transportation, representatives of users of public transportation, representatives of users of pedestrian walkways and bicycle transportation facilities, representatives of the disabled, providers of freight transportation services, and other interested parties;

(ii) Provide reasonable public access to technical and policy information used in the development of the long-range statewide transportation plan and the STIP;

(iii) Provide adequate public notice of public involvement activities and time for public review and comment at key decision points, including a reasonable opportunity to comment on the proposed long-range statewide transportation plan and STIP;

(iv) To the maximum extent practicable, ensure that public meetings are held at convenient and accessible locations and times;

(v) To the maximum extent practicable, use visualization techniques to describe the proposed long-range statewide transportation plan and supporting studies;

(vi) To the maximum extent practicable, make public information

available in electronically accessible format and means, such as the World Wide Web, as appropriate to afford reasonable opportunity for consideration of public information;

(vii) Demonstrate explicit consideration and response to public input during the development of the long-range statewide transportation plan and STIP;

(viii) Include a process for seeking out and considering the needs of those traditionally underserved by existing transportation systems, such as low-income and minority households, who may face challenges accessing employment and other services; and

(ix) Provide for the periodic review of the effectiveness of the public involvement process to ensure that the process provides full and open access to all interested parties and revise the process, as appropriate.

(2) The State shall provide for public comment on existing and proposed processes for public involvement in the development of the long-range statewide transportation plan and the STIP. At a minimum, the State shall allow 45 calendar days for public review and written comment before the procedures and any major revisions to existing procedures are adopted. The State shall provide copies of the approved public involvement process document(s) to the FHWA and the FTA for informational purposes.

(b) The State shall provide for nonmetropolitan local official participation in the development of the long-range statewide transportation plan and the STIP. The State shall have a documented process(es) for cooperating with nonmetropolitan local officials representing units of general purpose local government and/or local officials with responsibility for transportation that is separate and discrete from the public involvement process and provides an opportunity for their participation in the development of the long-range statewide transportation plan and the STIP. Although the FHWA and the FTA shall not review or approve this cooperative process(es), the State shall provide copies of the process document(s) to the FHWA and the FTA for informational purposes.

(1) At least once every 5 years, the State shall review and solicit comments from nonmetropolitan local officials and other interested parties for a period of not less than 60 calendar days regarding the effectiveness of the cooperative process and any proposed changes. The State shall direct a specific request for comments to the State association of counties, State municipal league, regional planning agencies, or directly to nonmetropolitan local officials.

(2) The State, at its discretion, is responsible for determining whether to adopt any proposed changes. If a proposed change is not adopted, the State shall make publicly available its reasons for not accepting the proposed change, including notification to nonmetropolitan local officials or their associations.

(c) For each area of the State under the jurisdiction of an Indian Tribal government, the State shall develop the long-range statewide transportation plan and STIP in consultation with the Tribal government and the Secretary of the Interior. States shall, to the extent practicable, develop a documented process(es) that outlines roles, responsibilities, and key decision points for consulting with Indian Tribal governments and Department of the Interior in the development of the long-range statewide transportation plan and the STIP.

(d) To carry out the transportation planning process required by this section, a Governor may establish and designate RTPOs to enhance the planning, coordination, and implementation of the long-range statewide transportation plan and STIP, with an emphasis on addressing the needs of nonmetropolitan areas of the State. In order to be treated as an RTPO for purposes of this Part, any existing regional planning organization must be established and designated as an RTPO under this section.

(1) Where established, an RTPO shall be a multijurisdictional organization of nonmetropolitan local officials or their designees who volunteer for such organization and representatives of local transportation systems who volunteer for such organization.

(2) An RTPO shall establish, at a minimum:

(i) A policy committee, the majority of which shall consist of nonmetropolitan local officials, or their designees, and, as appropriate, additional representatives from the State, private business, transportation service providers, economic development practitioners, and the public in the region; and

(ii) A fiscal and administrative agent, such as an existing regional planning and development organization, to provide professional planning, management, and administrative support.

(3) The duties of an RTPO shall include:

(i) Developing and maintaining, in cooperation with the State, regional long-range multimodal transportation plans;

(ii) Developing a regional TIP for consideration by the State;

(iii) Fostering the coordination of local planning, land use, and economic development plans with State, regional, and local transportation plans and programs;

(iv) Providing technical assistance to local officials;

(v) Participating in national, multistate, and State policy and planning development processes to ensure the regional and local input of nonmetropolitan areas;

(vi) Providing a forum for public participation in the statewide and regional transportation planning processes;

(vii) Considering and sharing plans and programs with neighboring RTPOs, MPOs, and, where appropriate, Indian Tribal Governments; and

(viii) Conducting other duties, as necessary, to support and enhance the statewide planning process under § 450.206.

(4) If a State chooses not to establish or designate an RTPO, the State shall consult with affected nonmetropolitan local officials to determine projects that may be of regional significance.

§ 450.212 Transportation planning studies and project development.

(a) Pursuant to section 1308 of the Transportation Equity Act for the 21st Century, TEA–21 (Pub. L. 105–178), a State(s), MPO(s), or public transportation operator(s) may undertake a multimodal, systems-level corridor or subarea planning study as part of the statewide transportation planning process. To the extent practicable, development of these transportation planning studies shall involve consultation with, or joint efforts among, the State(s), MPO(s), and/or public transportation operator(s). The results or decisions of these transportation planning studies may be used as part of the overall project development process consistent with the National Environmental Policy Act (NEPA) of 1969 (42 U.S.C. 4321 et seq.) and associated implementing regulations (23 CFR part 771 and 40 CFR parts 1500–1508). Specifically, these corridor or subarea studies may result in producing any of the following for a proposed transportation project:

(1) Purpose and need or goals and objective statement(s);

(2) General travel corridor and/or general mode(s) definition (e.g., highway, transit, or a highway/transit combination);

(3) Preliminary screening of alternatives and elimination of unreasonable alternatives;

(4) Basic description of the environmental setting; and/or

(5) Preliminary identification of environmental impacts and environmental mitigation.

(b) Publicly available documents or other source material produced by, or in support of, the transportation planning process described in this subpart may be incorporated directly or by reference into subsequent NEPA documents, in accordance with 40 CFR 1502.21, if:

(1) The NEPA lead agencies agree that such incorporation will aid in establishing or evaluating the purpose and need for the Federal action, reasonable alternatives, cumulative or other impacts on the human and natural environment, or mitigation of these impacts; and

(2) The systems-level, corridor, or subarea planning study is conducted with:

(i) Involvement of interested State, local, Tribal, and Federal agencies;

(ii) Public review;

(iii) Reasonable opportunity to comment during the statewide transportation planning process and development of the corridor or subarea planning study;

(iv) Documentation of relevant decisions in a form that is identifiable and available for review during the NEPA scoping process and can be appended to or referenced in the NEPA document; and

(v) The review of the FHWA and the FTA, as appropriate.

(c) By agreement of the NEPA lead agencies, the above integration may be accomplished through tiering (as described in 40 CFR 1502.20), incorporating the subarea or corridor planning study into the draft Environmental Impact Statement or Environmental Assessment, or other means that the NEPA lead agencies deem appropriate. Additional information to further explain the linkages between the transportation planning and project development/NEPA processes is contained in Appendix A to this part, including an explanation that is non-binding guidance material.

§ 450.214 Development of Programmatic Mitigation Plans.

(a) A State may develop programmatic mitigation plans to address the potential environmental impacts of future transportation projects. The State will determine the scope of the programmatic mitigation plan in consultation with the FHWA and/or the FTA and with the agency or agencies with jurisdiction and special expertise over the resources being addressed in the plan.

(1) *Scope.* (i) A State may develop a programmatic mitigation plan on a local, regional, ecosystem, watershed, statewide or similar scale.

(ii) The plan may encompass multiple environmental resources within a defined geographic area(s) or may focus on a specific type(s) of resource(s) such as aquatic resources, parkland, or wildlife habitat.

(iii) The plan may address or consider impacts from all projects in a defined geographic area(s) or may focus on a specific type(s) of project(s).

(2) *Contents.* The programmatic mitigation plan may include:

(i) An assessment of the existing condition of natural and human environmental resources within the area covered by the plan, including an assessment of historic and recent trends and/or any potential threats to those resources;

(ii) An identification of economic, social, and natural and human environmental resources within the geographic area that may be impacted and considered for mitigation. Examples of these resources include wetlands, streams, rivers, stormwater, parklands, cultural resources, historic resources, farmlands, and threatened or endangered species critical habitat. This may include the identification of areas of high conservation concern or value, and thus worthy of avoidance;

(iii) An inventory of existing or planned environmental resource banks for the impacted resource categories such as wetland, stream, habitat, species, and an inventory of federally, State, or locally approved in-lieu-of-fee programs;

(iv) An assessment of potential opportunities to improve the overall quality of the identified environmental resources through strategic mitigation for impacts of transportation projects, which may include the prioritization of parcels or areas for acquisition and/or potential resource banking sites;

(v) An adoption or development of standard measures or operating procedures for mitigating certain types of impacts; establishment of parameters for determining or calculating appropriate mitigation for certain types of impacts, such as mitigation ratios, or criteria for determining appropriate mitigation sites;

(vi) Adaptive management procedures, such as protocols or procedures that involve monitoring actual impacts against predicted impacts over time and adjusting mitigation measures in response to information gathered through the monitoring;

(vii) Acknowledgment of specific statutory or regulatory requirements that must be satisfied when determining appropriate mitigation for certain types of resources.

(b) If a State chooses to develop a programmatic mitigation plan then it shall be developed as part of the statewide transportation planning process, requiring the State to consider the following process prior to adopting a programmatic mitigation plan:

(1) Consult with each agency with jurisdiction over the environmental resources considered in the programmatic mitigation plan;

(2) Make available a draft of the programmatic mitigation plan for review and comment by appropriate environmental resource agencies and the public;

(3) Consider comments received from such agencies and the public on the draft plan; and

(4) Address such comments in the final programmatic mitigation plan.

(c) A State may integrate a programmatic mitigation plan with other plans, including, watershed plans, ecosystem plans, species recovery plans, growth management plans, State Wildlife Action Plans, and land use plans.

(d) If a programmatic mitigation plan has been developed pursuant to this section, any Federal agency responsible for environmental reviews, permits, or approvals for a transportation project may use the recommendations in the programmatic mitigation plan when carrying out its responsibilities under the National Environmental Policy Act of 1969 (42 U.S.C. 4321 et seq.) (NEPA) and any other environmental laws and regulations.

(e) Nothing in this section limits the use of programmatic approaches for reviews under NEPA.

§ 450.216 Development and content of the long-range statewide transportation plan.

(a) The State shall develop a long-range statewide transportation plan, with a minimum 20-year forecast period at the time of adoption, that provides for the development and implementation of the multimodal transportation system for the State. The long-range statewide transportation plan shall consider and include, as applicable, elements and connections between public transportation, non-motorized modes, rail, commercial motor vehicle, waterway, and aviation facilities, particularly with respect to intercity travel.

(b) The long-range statewide transportation plan should include capital, operations and management strategies, investments, procedures, and other measures to ensure the preservation and most efficient use of the existing transportation system. The long-range statewide transportation plan may consider projects and strategies that address areas or corridors where current or projected congestion threatens the efficient functioning of key elements of the State's transportation system.

(c) The long-range statewide transportation plan shall reference, summarize, or contain any applicable short-range planning studies; strategic planning and/or policy studies; transportation needs studies; management systems reports; emergency relief and disaster preparedness plans; and any statements of policies, goals, and objectives on issues (e.g., transportation, safety, economic development, social and environmental effects, or energy), as appropriate, that were relevant to the development of the long-range statewide transportation plan.

(d) The long-range statewide transportation plan should integrate the priorities, goals, countermeasures, strategies, or projects contained in the HSIP, including the SHSP, required under 23 U.S.C. 148, the Public Transportation Agency Safety Plan required under 49 U.S.C. 5329(d), or an Interim Agency Safety Plan in accordance with 49 CFR part 659, as in effect until completion of the Public Transportation Agency Safety Plan.

(e) The long-range statewide transportation plan should include a security element that incorporates or summarizes the priorities, goals, or projects set forth in other transit safety and security planning and review processes, plans, and programs, as appropriate.

(f) The statewide transportation plan should include:

(1) A description of the performance measures and performance targets used in assessing the performance of the transportation system in accordance with § 450.206(c); and

(2) A system performance report and subsequent updates evaluating the condition and performance of the transportation system with respect to the performance targets described in § 450.206(c), including progress achieved by the MPO(s) in meeting the performance targets in comparison with system performance recorded in previous reports.

(g) Within each metropolitan area of the State, the State shall develop the long-range statewide transportation plan in cooperation with the affected MPOs.

(h) For nonmetropolitan areas, the State shall develop the long-range statewide transportation plan in cooperation with affected nonmetropolitan local officials with responsibility for transportation or, if applicable, through RTPOs described in § 450.210(d) using the State's consultation process(es) established under § 450.210(b).

(i) For each area of the State under the jurisdiction of an Indian Tribal government, the State shall develop the long-range statewide transportation plan in consultation with the Tribal government and the Secretary of the Interior consistent with § 450.210(c).

(j) The State shall develop the long-range statewide transportation plan, as appropriate, in consultation with State, Tribal, and local agencies responsible for land use management, natural resources, environmental protection, conservation, and historic preservation. This consultation shall involve comparison of transportation plans to State and Tribal conservation plans or maps, if available, and comparison of transportation plans to inventories of natural or historic resources, if available.

(k) A long-range statewide transportation plan shall include a discussion of potential environmental mitigation activities and potential areas to carry out these activities, including activities that may have the greatest potential to restore and maintain the environmental functions affected by the long-range statewide transportation plan. The discussion may focus on policies, programs, or strategies, rather than at the project level. The State shall develop the discussion in consultation with Federal, State, regional, local and Tribal land management, wildlife, and regulatory agencies. The State may establish reasonable timeframes for performing this consultation.

(l) In developing and updating the long-range statewide transportation plan, the State shall provide:

(1) To nonmetropolitan local elected officials, or, if applicable, through RTPOs described in § 450.210(d), an opportunity to participate in accordance with § 450.216(h); and

(2) To individuals, affected public agencies, representatives of public transportation employees, freight shippers, private providers of transportation, representatives of users of public transportation, representatives of users of pedestrian walkways and bicycle transportation facilities, representatives of the disabled, providers of freight transportation services, and other interested parties with a reasonable opportunity to comment on the proposed long-range statewide transportation plan. In carrying out these requirements, the State shall use the public involvement process described under § 450.210(a).

(m) The long-range statewide transportation plan may include a financial plan that demonstrates how the adopted long-range statewide transportation plan can be implemented, indicates resources from public and private sources that are reasonably expected to be made available to carry out the plan, and recommends any additional financing strategies for needed projects and programs. In addition, for illustrative purposes, the financial plan may include additional projects that the State would include in the adopted long-range statewide transportation plan if additional resources beyond those identified in the financial plan were to become available. The financial plan may include an assessment of the appropriateness of innovative finance techniques (for example, tolling, pricing, bonding, public-private partnerships, or other strategies) as revenue sources.

(n) The long-range statewide transportation plan should be informed by the financial plan and investment strategies from the State asset management plan for the NHS (as defined in 23 U.S.C. 119(e)) and investment priorities of the public transit asset management plan(s) (as discussed in 49 U.S.C. 5326).

(o) The State is not required to select any project from the illustrative list of additional projects included in the financial plan described in paragraph (m) of this section.

(p) The State shall publish or otherwise make available the long-range statewide transportation plan for public review, including (to the maximum extent practicable) in electronically accessible formats and means, such as the World Wide Web, as described in § 450.210(a).

(q) The State shall continually evaluate, revise, and periodically update the long-range statewide transportation plan, as appropriate, using the procedures in this section for development and establishment of the long-range statewide transportation plan.

(r) The State shall provide copies of any new or amended long-range statewide transportation plan documents to the FHWA and the FTA for informational purposes.

§ 450.218 Development and content of the statewide transportation improvement program (STIP).

(a) The State shall develop a statewide transportation improvement program (STIP) for all areas of the State. The STIP shall cover a period of no less than 4 years and shall be updated at least every 4 years, or more frequently if the Governor of the State elects a more frequent update cycle. However, if the STIP covers more than 4 years, the FHWA and the FTA will consider the projects in the additional years as informational. In case of difficulties developing a portion of the STIP for a particular area (e.g., metropolitan planning area, nonattainment or maintenance area, or Indian Tribal lands), the State may develop a partial STIP covering the rest of the State.

(b) For each metropolitan area in the State, the State shall develop the STIP in cooperation with the MPO designated for the metropolitan area. The State shall include each metropolitan TIP without change in the STIP, directly or by reference, after approval of the TIP by the MPO and the Governor. A metropolitan TIP in a nonattainment or maintenance area is subject to a FHWA/FTA conformity finding before inclusion in the STIP. In areas outside a metropolitan planning area but within an air quality nonattainment or maintenance area containing any part of a metropolitan area, projects must be included in the regional emissions analysis that supported the conformity determination of the associated metropolitan TIP before they are added to the STIP.

(c) For each nonmetropolitan area in the State, the State shall develop the STIP in cooperation with affected nonmetropolitan local officials with responsibility for transportation or, if applicable, through RTPOs described in § 450.210(d) using the State's consultation process(es) established under § 450.210(b).

(d) For each area of the State under the jurisdiction of an Indian Tribal government, the STIP shall be developed in consultation with the Tribal government and the Secretary of the Interior.

(e) Tribal Transportation Program, Federal Lands Transportation Program, and Federal Lands Access Program TIPs shall be included without change in the STIP, directly or by reference, once approved by the FHWA pursuant to 23 U.S.C. 201(c)(4).

(f) The Governor shall provide all interested parties with a reasonable opportunity to comment on the proposed STIP as required by § 450.210(a).

(g) The STIP shall include capital and non-capital surface transportation projects (or phases of projects) within the boundaries of the State proposed for funding under title 23 U.S.C. and title 49 U.S.C. Chapter 53 (including transportation alternatives and associated transit improvements; Tribal Transportation Program projects, Federal Lands Transportation Program projects, and Federal Lands Access Program projects; HSIP projects; trails projects; and accessible pedestrian walkways and bicycle facilities), except the following that may be included:

(1) Safety projects funded under 23 U.S.C. 402 and 49 U.S.C. 31102;

(2) Metropolitan planning projects funded under 23 U.S.C. 104(d) and 49 U.S.C. 5305(d);

(3) State planning and research projects funded under 23 U.S.C. 505 and 49 U.S.C. 5305(e);

(4) State planning and research projects funded with Surface Transportation Program funds;

(5) Emergency relief projects (except those involving substantial functional, locational, or capacity changes);

(6) Research, development, demonstration, and deployment projects funded under 49 U.S.C. 5312, and technical assistance and standards development projects funded under 49 U.S.C. 5314;

(7) Project management oversight projects funded under 49 U.S.C. 5327; and

(8) State safety oversight programs funded under 49 U.S.C. 5329.

(h) The STIP shall contain all regionally significant projects requiring an action by the FHWA or the FTA whether or not the projects are to be funded with 23 U.S.C. Chapters 1 and 2 or title 49 U.S.C. Chapter 53 funds (e.g., addition of an interchange to the Interstate System with State, local, and/or private funds, and congressionally designated projects not funded under title 23 U.S.C. or title 49 U.S.C. Chapter 53). For informational and conformity purposes, the STIP shall include (if appropriate and included in any TIPs) all regionally significant projects proposed to be funded with Federal funds other than those administered by the FHWA or the FTA, as well as all regionally significant projects to be funded with non-Federal funds.

(i) The STIP shall include for each project or phase (e.g., preliminary engineering, environment/NEPA, right-of-way, design, or construction) the following:

(1) Sufficient descriptive material (i.e., type of work, termini, and length) to identify the project or phase;

(2) Estimated total project cost or a project cost range, which may extend beyond the 4 years of the STIP;

(3) The amount of Federal funds proposed to be obligated during each program year. For the first year, this includes the proposed category of Federal funds and source(s) of non-Federal funds. For the second, third, and fourth years, this includes the likely category or possible categories of Federal funds and sources of non-Federal funds; and

(4) Identification of the agencies responsible for carrying out the project or phase.

(j) Projects that are not considered to be of appropriate scale for individual identification in a given program year may be grouped by function, work type, and/or geographic area using the applicable classifications under 23 CFR 771.117(c) and (d) and/or 40 CFR part 93. In nonattainment and maintenance areas, project classifications must be consistent with the ''exempt project'' classifications contained in the EPA's transportation conformity regulations (40 CFR part 93, subpart A). In addition, projects proposed for funding under title 23 U.S.C. Chapter 2 that are not regionally significant may be grouped in one line item or identified individually in the STIP.

(k) Each project or project phase included in the STIP shall be consistent with the long-range statewide transportation plan developed under § 450.216 and, in metropolitan planning areas, consistent with an approved metropolitan transportation plan developed under § 450.324.

(l) The STIP may include a financial plan that demonstrates how the approved STIP can be implemented, indicates resources from public and private sources that are reasonably expected to be available to carry out the STIP, and recommends any additional financing strategies for needed projects and programs. In addition, for illustrative purposes, the financial plan may include additional projects that would be included in the adopted STIP if reasonable additional resources beyond those identified in the financial plan were to become available. The State is not required to select any project from the illustrative list for implementation, and projects on the illustrative list cannot be advanced to implementation without an action by the FHWA and the FTA on the STIP. Revenue and cost estimates for the STIP must use an inflation rate to reflect ''year of expenditure dollars,'' based on reasonable financial principles and information, developed cooperatively by

the State, MPOs, and public transportation operators.

(m) In nonattainment and maintenance areas, projects included in the first 2 years of the STIP shall be limited to those for which funds are available or committed. Financial constraint of the STIP shall be demonstrated and maintained by year and shall include sufficient financial information to demonstrate which projects are to be implemented using current and/or reasonably available revenues, while federally supported facilities are being adequately operated and maintained. In the case of proposed funding sources, strategies for ensuring their availability shall be identified in the financial plan consistent with paragraph (l) of this section. For purposes of transportation operations and maintenance, the STIP shall include financial information containing system-level estimates of costs and revenue sources that are reasonably expected to be available to adequately operate and maintain Federal-aid highways (as defined by 23 U.S.C. 101(a)(5)) and public transportation (as defined by title 49 U.S.C. 5302).

(n) Projects in any of the first 4 years of the STIP may be advanced in place of another project in the first 4 years of the STIP, subject to the project selection requirements of § 450.222. In addition, subject to FHWA/FTA approval (see § 450.220), the State may revise the STIP at any time under procedures agreed to by the State, MPO(s), and public transportation operators consistent with the STIP development procedures established in this section, as well as the procedures for participation by interested parties (see § 450.210(a)). Changes that affect fiscal constraint must take place by amendment of the STIP.

(o) The STIP should be informed by the financial plan and the investment strategies from the State asset management plan for the NHS (as defined in 23 U.S.C. 119(e)) and by the public transit asset management plan(s) (as discussed in 49 U.S.C. 5326).

(p) The STIP shall include a project, or an identified phase of a project, only if full funding can reasonably be anticipated to be available for the project within the time period contemplated for completion of the project.

(q) In cases where the FHWA and the FTA find a STIP to be fiscally constrained, and a revenue source is subsequently removed or substantially reduced (i.e., by legislative or administrative actions), the FHWA and the FTA will not withdraw the original determination of fiscal constraint. However, in such cases, the FHWA and the FTA will not act on an updated or amended STIP that does not reflect the changed revenue situation.

(r) A STIP shall include, to the maximum extent practicable, a discussion of the anticipated effect of the STIP toward achieving the performance targets identified by the State in the statewide transportation plan or other state performance-based plan(s), linking investment priorities to those performance targets. This discussion should be consistent with the strategies to achieve targets presented in the statewide transportation plan and other performance management plans such as the highway and transit asset management plans, the SHSP, the public transportation agency safety plan, the Congestion Mitigation and Air Quality Improvement Program (CMAQ) performance plan, and if one exists, the State freight plan.

§ 450.220 Self-certifications, Federal findings, and Federal approvals.

(a) At least every 4 years, the State shall submit an updated STIP concurrently to the FHWA and the FTA for joint approval. The State must also submit STIP amendments to the FHWA and the FTA for joint approval. At the time the entire proposed STIP or STIP amendments are submitted to the FHWA and the FTA for joint approval, the State shall certify that the transportation planning process is being carried out in accordance with all applicable requirements of:

(1) 23 U.S.C. 134 and 135, 49 U.S.C. 5303 and 5304, and this part;

(2) Title VI of the Civil Rights Act of 1964, as amended (42 U.S.C. 2000d–1) and 49 CFR part 21;

(3) 49 U.S.C. 5332, prohibiting discrimination on the basis of race, color, creed, national origin, sex, or age in employment or business opportunity;

(4) Section 1101(b) of MAP–21 (Pub. L. 112–141) and 49 CFR part 26 regarding the involvement of disadvantaged business enterprises in DOT funded projects;

(5) 23 CFR part 230, regarding implementation of an equal employment opportunity program on Federal and Federal-aid highway construction contracts;

(6) The provisions of the Americans with Disabilities Act of 1990 (42 U.S.C. 12101 et seq.) and 49 CFR parts 27, 37, and 38;

(7) In States containing nonattainment and maintenance areas, sections 174 and 176(c) and (d) of the Clean Air Act, as amended (42 U.S.C. 7504, 7506(c) and (d)) and 40 CFR part 93;

(8) The Older Americans Act, as amended (42 U.S.C. 6101), prohibiting discrimination on the basis of age in programs or activities receiving Federal financial assistance;

(9) 23 U.S.C. 324, regarding the prohibition of discrimination based on gender; and

(10) Section 504 of the Rehabilitation Act of 1973 (29 U.S.C. 794) and 49 CFR part 27 regarding discrimination against individuals with disabilities.

(b) The FHWA and the FTA shall review the STIP or the amended STIP, and make a joint finding on the extent to which the STIP is based on a statewide transportation planning process that meets or substantially meets the requirements of 23 U.S.C. 134 and 135, 49 U.S.C. 5303 and 5304, and subparts A, B, and C of this part. Approval of the STIP by the FHWA and the FTA, in its entirety or in part, will be based upon the results of this joint finding.

(1) If the FHWA and the FTA determine that the STIP or amended STIP is based on a statewide transportation planning process that meets or substantially meets the requirements of 23 U.S.C. 135, 49 U.S.C. 5304, and this part, the FHWA and the FTA may jointly:

(i) Approve the entire STIP;

(ii) Approve the STIP subject to certain corrective actions by the State; or

(iii) Under special circumstances, approve a partial STIP covering only a portion of the State.

(2) If the FHWA and the FTA jointly determine and document in the planning finding that a submitted STIP or amended STIP does not substantially meet the requirements of 23 U.S.C. 135, 49 U.S.C. 5304, and this part for any identified categories of projects, the FHWA and the FTA will not approve the STIP.

(c) The approval period for a new or amended STIP shall not exceed 4 years. If a State demonstrates, in writing, that extenuating circumstances will delay the submittal of a new or amended STIP past its update deadline, the FHWA and the FTA will consider and take appropriate action on a request to extend the approval beyond 4 years for all or part of the STIP for a period not to exceed 180 calendar days. In these cases, priority consideration will be given to projects and strategies involving the operation and management of the multimodal transportation system. Where the request involves projects in a metropolitan planning area(s), the affected MPO(s) must concur in the request. If the delay was due to the

development and approval of a metropolitan TIP(s), the affected MPO(s) must provide supporting information, in writing, for the request.

(d) Where necessary in order to maintain or establish highway and transit operations, the FHWA and the FTA may approve operating assistance for specific projects or programs, even though the projects or programs may not be included in an approved STIP.

§ 450.222 Project selection from the STIP.

(a) Except as provided in § 450.218(g) and § 450.220(d), only projects in a FHWA/FTA approved STIP are eligible for funds administered by the FHWA or the FTA.

(b) In metropolitan planning areas, transportation projects proposed for funds administered by the FHWA or the FTA shall be selected from the approved STIP in accordance with project selection procedures provided in § 450.332.

(c) In nonmetropolitan areas, with the exclusion of specific projects as described in this section, the State shall select projects from the approved STIP in cooperation with the affected nonmetropolitan local officials, or if applicable, through RTPOs described in § 450.210(e). The State shall select transportation projects undertaken on the NHS, under the Bridge and Interstate Maintenance programs in title 23 U.S.C. and under sections 5310 and 5311 of title 49 U.S.C. Chapter 53 from the approved STIP in consultation with the affected nonmetropolitan local officials with responsibility for transportation.

(d) Tribal Transportation Program, Federal Lands Transportation Program, and Federal Lands Access Program projects shall be selected from the approved STIP in accordance with the procedures developed pursuant to 23 U.S.C. 201, 202, 203, and 204.

(e) The projects in the first year of an approved STIP shall constitute an ''agreed to'' list of projects for subsequent scheduling and implementation. No further action under paragraphs (b) through (d) of this section is required for the implementing agency to proceed with these projects. If Federal funds available are significantly less than the authorized amounts, or where there is significant shifting of projects among years, § 450.332(a) provides for a revised list of ''agreed to'' projects to be developed upon the request of the State, MPO, or public transportation operator(s). If an implementing agency wishes to proceed with a project in the second, third, or fourth year of the STIP, the procedures in paragraphs (b) through (d) of this section or expedited procedures that provide for the advancement of projects from the second, third, or fourth years of the STIP may be used, if agreed to by all parties involved in the selection process.

§ 450.224 Applicability of NEPA to statewide transportation plans and programs.

Any decision by the Secretary concerning a long-range statewide transportation plan or STIP developed through the processes provided for in 23 U.S.C. 135, 49 U.S.C. 5304, and this subpart shall not be considered to be a Federal action subject to review under the National Environmental Policy Act of 1969 (42 U.S.C. 4321 et seq.).

§ 450.226 Phase-in of new requirements.

(a) Prior to [2 years after the publication date of the final rule], a State may adopt a long-range statewide transportation plan that has been developed using the SAFETEA–LU requirements or the provisions and requirements of this part. On or [2 years after the publication date of the final rule], a State may only adopt a long-range statewide transportation plan that it has developed according to the provisions and requirements of this part.

(b) Prior to [2 years after the publication date of the final rule], FHWA/FTA may approve a STIP update or amendment that has been developed using the SAFETEA–LU requirements or the provisions and requirements of this part. On or after [2 years after the publication date of the final rule], FHWA/FTA may only approve a STIP update or amendment that a State has developed according to the provisions and requirements of this part, regardless of when the State developed the STIP.

(c) On and after [2 years after the publication date of the final rule], the FHWA and the FTA will take action on an updated or amended STIP developed under the provisions of this part, even if the State has not yet adopted a new long-range statewide transportation plan under the provisions of this part, as long as the underlying transportation planning process is consistent with the requirements in the MAP–21.

(d) On or after [2 years after the publication date of the final rule], a State may make an administrative modification to a STIP that conforms to either the SAFETEA–LU requirements or to the provisions and requirements of this part.

(e) Two years from the effective date of each rule establishing performance measures under 23 U.S.C. 150(c), 49 U.S.C. 5326, or 49 U.S.C. 5329, FHWA/FTA will only approve an updated or amended STIP that is based on a statewide transportation planning process that meets the performance-based planning requirements in this part and in such a rule.

(f) Prior to 2 years from the effective date of each rule establishing performance measures under 23 U.S.C. 150(c), 49 U.S.C. 5326, or 49 U.S.C. 5329, a State may adopt a long-range statewide transportation plan that it has developed using the SAFETEA–LU requirements or the performance-based provisions and requirements of this part and in such a rule. Two years on or after the effective date of each rule establishing performance measures under 23 U.S.C. 150(c), 49 U.S.C. 5326, or 49 U.S.C. 5329, a State may only adopt a long-range statewide transportation plan that it has developed according to the performance-based provisions and requirements of this part and in such a rule.

Subpart C—Metropolitan Transportation Planning and Programming

§ 450.300 Purpose.

The purposes of this subpart are to implement the provisions of 23 U.S.C. 134, 23 U.S.C. 150, and 49 U.S.C. 5303, as amended, which:

(a) Set forth the national policy that the MPO designated for each urbanized area is to carry out a continuing, cooperative, and comprehensive performance-based multimodal transportation planning process, including the development of a metropolitan transportation plan and a TIP, that encourages and promotes the safe and efficient development, management, and operation of surface transportation systems to serve the mobility needs of people and freight (including accessible pedestrian walkways and bicycle transportation facilities) and foster economic growth and development, while minimizing transportation-related fuel consumption and air pollution; and

(b) Encourages continued development and improvement of metropolitan transportation planning processes guided by the planning factors set forth in 23 U.S.C. 134(h) and 49 U.S.C. 5303(h).

§ 450.302 Applicability.

The provisions of this subpart are applicable to organizations and entities responsible for the transportation planning and programming processes in metropolitan planning areas.

§ 450.304 Definitions.

Except as otherwise provided in subpart A of this part, terms defined in 23 U.S.C. 101(a) and 49 U.S.C. 5302 are used in this subpart as so defined.

§ 450.306 Scope of the metropolitan transportation planning process.

(a) To accomplish the objectives in §§ 450.300 and 450.306(b), metropolitan planning organizations designated under § 450.310, in cooperation with the State and public transportation operators, shall develop long-range transportation plans and TIPs through a performance-driven, outcome-based approach to planning for metropolitan areas of the State.

(b) The metropolitan transportation planning process shall be continuous, cooperative, and comprehensive, and provide for consideration and implementation of projects, strategies, and services that will address the following factors:

(1) Support the economic vitality of the metropolitan area, especially by enabling global competitiveness, productivity, and efficiency;

(2) Increase the safety of the transportation system for motorized and non-motorized users;

(3) Increase the security of the transportation system for motorized and non-motorized users;

(4) Increase accessibility and mobility of people and freight;

(5) Protect and enhance the environment, promote energy conservation, improve the quality of life, and promote consistency between transportation improvements and State and local planned growth and economic development patterns;

(6) Enhance the integration and connectivity of the transportation system, across and between modes, for people and freight;

(7) Promote efficient system management and operation; and

(8) Emphasize the preservation of the existing transportation system.

(c) Consideration of the planning factors in paragraph (b) of this section shall be reflected, as appropriate, in the metropolitan transportation planning process. The degree of consideration and analysis of the factors should be based on the scale and complexity of many issues, including transportation system development, land use, employment, economic development, human and natural environment (including Section 4(f) properties as defined in 23 CFR 774.17), and housing and community development.

(d) *Performance-based approach.* (1) The metropolitan transportation planning process shall provide for the establishment and use of a performance-based approach to transportation decisionmaking to support the national goals described in 23 U.S.C. 150(b) and the general purposes described in 49 U.S.C. 5301(c).

(2) *Establishment of performance targets by metropolitan planning organizations.* (i) Each metropolitan planning organization shall establish performance targets that address the performance measures or standards established under 23 CFR part 490 (where applicable), 49 U.S.C. 5326(c), and 49 U.S.C. 5329(d) to use in tracking progress toward attainment of critical outcomes for the region of the metropolitan planning organization.

(ii) The selection of targets that address performance measures described in 23 U.S.C. 150(c) shall be in accordance with the appropriate target setting framework established at 23 CFR part 490, and shall be coordinated with the relevant State(s) to ensure consistency, to the maximum extent practicable.

(iii) The selection of performance targets that address performance measures described in 49 U.S.C. 5326(c) and 49 U.S.C. 5329(d) shall be coordinated, to the maximum extent practicable, with public transportation providers to ensure consistency with the performance targets that public transportation providers establish under 49 U.S.C. 5326(c) and 49 U.S.C. 5329(d).

(3) Each MPO shall establish the performance targets under paragraph (d)(2) not later than 180 days after the date on which the relevant State or provider of public transportation establishes the performance targets.

(4) An MPO shall integrate in the metropolitan transportation planning process, directly or by reference, the goals, objectives, performance measures, and targets described in other State transportation plans and transportation processes, as well as any plans developed under 49 U.S.C. chapter 53 by providers of public transportation, required as part of a performance-based program including:

(i) The NHS asset management plan, as defined in 23 U.S.C. 119(e) and the Transit Asset Management Plan, as discussed in 49 U.S.C. 5326;

(ii) Applicable portions of the HSIP, including the SHSP, as specified in 23 U.S.C. 148;

(iii) The Public Transportation Agency Safety Plan in 49 U.S.C. 5329(d);

(iv) Other safety and security planning and review processes, plans, and programs, as appropriate;

(v) The Congestion Mitigation and Air Quality Improvement Program performance plan in 23 U.S.C. 149(l), as applicable;

(v) Appropriate (metropolitan) portions of the State Freight Plan (MAP–21 sec. 1118);

(vi) The congestion management process, as defined in 23 CFR 450.322, if applicable; and

(vii) Other State transportation plans and transportation processes required as part of a performance-based program.

(e) The failure to consider any factor specified in paragraph (b) or (d) of this section shall not be reviewable by any court under title 23 U.S.C., 49 U.S.C. Chapter 53, subchapter II of title 5, U.S.C. Chapter 5, or title 5 U.S.C. Chapter 7 in any matter affecting a metropolitan transportation plan, TIP, a project or strategy, or the certification of a metropolitan transportation planning process.

(f) An MPO shall carry out the metropolitan transportation planning process in coordination with the statewide transportation planning process required by 23 U.S.C. 135 and 49 U.S.C. 5304.

(g) The metropolitan transportation planning process shall (to the maximum extent practicable) be consistent with the development of applicable regional intelligent transportation systems (ITS) architectures, as defined in 23 CFR part 940.

(h) Preparation of the coordinated public transit-human services transportation plan, as required by 49 U.S.C. 5310, should be coordinated and consistent with the metropolitan transportation planning process.

(i) In an urbanized area not designated as a TMA that is an air quality attainment area, the MPO(s) may propose and submit to the FHWA and the FTA for approval a procedure for developing an abbreviated metropolitan transportation plan and TIP. In developing proposed simplified planning procedures, consideration shall be given to whether the abbreviated metropolitan transportation plan and TIP will achieve the purposes of 23 U.S.C. 134, 49 U.S.C. 5303, and these regulations, taking into account the complexity of the transportation problems in the area. The MPO shall develop simplified procedures in cooperation with the State(s) and public transportation operator(s).

§ 450.308 Funding for transportation planning and unified planning work programs.

(a) Funds provided under 23 U.S.C. 104(d), 49 U.S.C. 5305(d), and 49 U.S.C. 5307, are available to MPOs to accomplish activities described in this subpart. At the State's option, funds

provided under 23 U.S.C. 104(b)(2) and 23 U.S.C. 505 may also be provided to MPOs for metropolitan transportation planning. At the option of the State and transit operator(s), funds provided under 49 U.S.C. 5305(e) may also be provided to MPOs for activities that support metropolitan transportation planning. In addition, an MPO serving an urbanized area with a population over 200,000, as designated by the Bureau of the Census, may at its discretion use funds sub-allocated under 23 U.S.C. 133(d)(4) for metropolitan transportation planning activities.

(b) An MPO shall document metropolitan transportation planning activities performed with funds provided under title 23 U.S.C. and title 49 U.S.C. Chapter 53 in a unified planning work program (UPWP) or simplified statement of work in accordance with the provisions of this section and 23 CFR part 420.

(c) Except as provided in paragraph (d) of this section, each MPO, in cooperation with the State(s) and public transportation operator(s), shall develop a UPWP that includes a discussion of the planning priorities facing the MPA. The UPWP shall identify work proposed for the next 1- or 2-year period by major activity and task (including activities that address the planning factors in § 450.306(b)), in sufficient detail to indicate who (e.g., MPO, State, public transportation operator, local government, or consultant) will perform the work, the schedule for completing the work, the resulting products, the proposed funding by activity/task, and a summary of the total amounts and sources of Federal and matching funds.

(d) With the prior approval of the State and the FHWA and the FTA, an MPO in an area not designated as a TMA may prepare a simplified statement of work, in cooperation with the State(s) and the public transportation operator(s), in lieu of a UPWP. A simplified statement of work shall include a description of the major activities to be performed during the next 1- or 2-year period, who (e.g., State, MPO, public transportation operator, local government, or consultant) will perform the work, the resulting products, and a summary of the total amounts and sources of Federal and matching funds. If a simplified statement of work is used, it may be submitted as part of the State's planning work program, in accordance with 23 CFR part 420.

(e) Arrangements may be made with the FHWA and the FTA to combine the UPWP or simplified statement of work with the work program(s) for other Federal planning funds.

(f) Administrative requirements for UPWPs and simplified statements of work are contained in 23 CFR part 420 and FTA Circular C8100, as amended (Program Guidance for Metropolitan Planning and State Planning and Research Program Grants).

§ 450.310 Metropolitan planning organization designation and redesignation.

(a) To carry out the metropolitan transportation planning process under this subpart, an MPO shall be designated for each urbanized area with a population of more than 50,000 individuals (as determined by the Bureau of the Census).

(b) MPO designation shall be made by agreement between the Governor and units of general purpose local government that together represent at least 75 percent of the affected population (including the largest incorporated city, based on population, as named by the Bureau of the Census) or in accordance with procedures established by applicable State or local law.

(c) The FHWA and the FTA shall identify as a TMA each urbanized area with a population of over 200,000 individuals, as defined by the Bureau of the Census. The FHWA and the FTA shall also designate any urbanized area as a TMA on the request of the Governor and the MPO designated for that area.

(d) *TMA structure.* (1) Not later than October 1, 2014, each metropolitan planning organization that serves a designated TMA shall consist of:

(i) Local elected officials;

(ii) Officials of public agencies that administer or operate major modes of transportation in the metropolitan area, including representation by providers of public transportation; and

(iii) Appropriate State officials.

(2) An MPO may be restructured to meet the requirements of this paragraph (d) without undertaking a redesignation.

(3) Nothing in this section shall be construed to interfere with the authority, under any State law in effect on December 18, 1991, of a public agency with multimodal transportation responsibilities:

(i) To develop the plans and TIPs for adoption by an MPO; and

(ii) To develop long-range capital plans, coordinate transit services and projects, and carry out other activities pursuant to State law.

(e) To the extent possible, only one MPO shall be designated for each urbanized area or group of contiguous urbanized areas. More than one MPO may be designated to serve an urbanized area only if the Governor(s) and the existing MPO, if applicable, determine that the size and complexity of the urbanized area make designation of more than one MPO appropriate. In those cases where two or more MPOs serve the same urbanized area, the MPOs shall establish official, written agreements that clearly identify areas of coordination and the division of transportation planning responsibilities among the MPOs.

(f) Nothing in this subpart shall be deemed to prohibit an MPO from using the staff resources of other agencies, non-profit organizations, or contractors to carry out selected elements of the metropolitan transportation planning process.

(g) An MPO designation shall remain in effect until an official redesignation has been made in accordance with this section.

(h) An existing MPO may be redesignated only by agreement between the Governor and units of general purpose local government that together represent at least 75 percent of the existing metropolitan planning area population (including the largest incorporated city, based on population, as named by the Bureau of the Census).

(i) For the purposes of redesignation, units of general purpose local government may be defined as elected officials from each unit of general purpose local government located within the metropolitan planning area served by the existing MPO.

(j) Redesignation of an MPO (in accordance with the provisions of this section) is required whenever the existing MPO proposes to make:

(1) A substantial change in the proportion of voting members on the existing MPO representing the largest incorporated city, other units of general purpose local government served by the MPO, and the State(s); or

(2) A substantial change in the decisionmaking authority or responsibility of the MPO, or in decisionmaking procedures established under MPO by-laws.

(k) Redesignation of an MPO serving a multistate metropolitan planning area requires agreement between the Governors of each State served by the existing MPO and units of general purpose local government that together represent at least 75 percent of the existing metropolitan planning area population (including the largest incorporated city, based on population, as named by the Bureau of the Census).

(l) The following changes to an MPO do not require a redesignation (as long as they do not trigger a substantial

change as described in paragraph (j) of this section):

(1) The identification of a new urbanized area (as determined by the Bureau of the Census) within an existing metropolitan planning area;

(2) Adding members to the MPO that represent new units of general purpose local government resulting from expansion of the metropolitan planning area;

(3) Adding members to satisfy the specific membership requirements described in paragraph (d) for an MPO that serves a TMA; or

(4) Periodic rotation of members representing units of general-purpose local government, as established under MPO by-laws.

(m) Each Governor with responsibility for a portion of a multistate metropolitan area and the appropriate MPOs shall, to the extent practicable, provide coordinated transportation planning for the entire MPA. The consent of Congress is granted to any two or more States to:

(1) Enter into agreements or compacts, not in conflict with any law of the United States, for cooperative efforts and mutual assistance in support of activities authorized under 23 U.S.C. 134 and 49 U.S.C. 5303 as the activities pertain to interstate areas and localities within the States; and

(2) Establish such agencies, joint or otherwise, as the States may determine desirable for making the agreements and compacts effective.

§ 450.312 Metropolitan planning area boundaries.

(a) The boundaries of a metropolitan planning area (MPA) shall be determined by agreement between the MPO and the Governor.

(1) At a minimum, the MPA boundaries shall encompass the entire existing urbanized area (as defined by the Bureau of the Census) plus the contiguous area expected to become urbanized within a 20-year forecast period for the metropolitan transportation plan.

(2) The MPA boundaries may be further expanded to encompass the entire metropolitan statistical area or combined statistical area, as defined by the Office of Management and Budget.

(b) An MPO that serves an urbanized area designated as a nonattainment area for ozone or carbon monoxide under the Clean Air Act (42 U.S.C. 7401 et seq.) as of August 10, 2005, shall retain the MPA boundary that existed on August 10, 2005. The MPA boundaries for such MPOs may only be adjusted by agreement of the Governor and the affected MPO in accordance with the redesignation procedures described in § 450.310(h). The MPA boundary for an MPO that serves an urbanized area designated as a nonattainment area for ozone or carbon monoxide under the Clean Air Act (42 U.S.C. 7401 et seq.) after August 10, 2005, may be established to coincide with the designated boundaries of the ozone and/or carbon monoxide nonattainment area, in accordance with the requirements in § 450.310(b).

(c) An MPA boundary may encompass more than one urbanized area.

(d) MPA boundaries may be established to coincide with the geography of regional economic development and growth forecasting areas.

(e) Identification of new urbanized areas within an existing metropolitan planning area by the Bureau of the Census shall not require redesignation of the existing MPO.

(f) Where the boundaries of the urbanized area or MPA extend across two or more States, the Governors with responsibility for a portion of the multistate area, the appropriate MPO(s), and the public transportation operator(s) are strongly encouraged to coordinate transportation planning for the entire multistate area.

(g) The MPA boundaries shall not overlap with each other.

(h) Where part of an urbanized area served by one MPO extends into an adjacent MPA, the MPOs shall, at a minimum, establish written agreements that clearly identify areas of coordination and the division of transportation planning responsibilities among and between the MPOs. Alternatively, the MPOs may adjust their existing boundaries so that the entire urbanized area lies within only one MPA. Boundary adjustments that change the composition of the MPO may require redesignation of one or more such MPOs.

(i) The MPO (in cooperation with the State and public transportation operator(s)) shall review the MPA boundaries after each Census to determine if existing MPA boundaries meet the minimum statutory requirements for new and updated urbanized area(s), and shall adjust them as necessary. As appropriate, additional adjustments should be made to reflect the most comprehensive boundary to foster an effective planning process that ensures connectivity between modes, improves access to modal systems, and promotes efficient overall transportation investment strategies.

(j) Following MPA boundary approval by the MPO and the Governor, the MPA boundary descriptions shall be provided for informational purposes to the FHWA and the FTA. The MPA boundary descriptions shall be submitted either as a geo-spatial database or described in sufficient detail to enable the boundaries to be accurately delineated on a map.

§ 450.314 Metropolitan planning agreements.

(a) The MPO, the State(s), and the providers of public transportation shall cooperatively determine their mutual responsibilities in carrying out the metropolitan transportation planning process. These responsibilities shall be clearly identified in written agreements among the MPO, the State(s), and the providers of public transportation serving the MPA. To the extent possible, a single agreement between all responsible parties should be developed. The written agreement(s) shall include specific provisions for cooperatively developing and sharing information related to transportation systems performance data, the selection of performance targets, the reporting of performance targets, the reporting of system performance to be used in tracking progress toward attainment of critical outcomes for the region of the MPO (see § 450.306(d)), the collection of data for the asset management plans for the NHS, the development of financial plans that support the metropolitan transportation plan (see § 450.324) and the metropolitan TIP (see § 450.326), and development of the annual listing of obligated projects (see § 450.334).

(b) The MPO, the State(s), and the providers of public transportation should periodically review and update the agreement, as appropriate, to reflect effective changes.

(c) If the MPA does not include the entire nonattainment or maintenance area, there shall be a written agreement among the State department of transportation, State air quality agency, affected local agencies, and the MPO describing the process for cooperative planning and analysis of all projects outside the MPA within the nonattainment or maintenance area. The agreement must also indicate how the total transportation-related emissions for the nonattainment or maintenance area, including areas outside the MPA, will be treated for the purposes of determining conformity in accordance with the EPA's transportation conformity regulations (40 CFR part 93, subpart A). The agreement shall address policy mechanisms for resolving conflicts concerning transportation-related emissions that may arise between the MPA and the portion of the

nonattainment or maintenance area outside the MPA.

(d) In nonattainment or maintenance areas, if the MPO is not the designated agency for air quality planning under section 174 of the Clean Air Act (42 U.S.C. 7504), there shall be a written agreement between the MPO and the designated air quality planning agency describing their respective roles and responsibilities for air quality related transportation planning.

(e) If more than one MPO has been designated to serve an urbanized area, there shall be a written agreement among the MPOs, the State(s), and the public transportation operator(s) describing how the metropolitan transportation planning processes will be coordinated to assure the development of consistent metropolitan transportation plans and TIPs across the MPA boundaries, particularly in cases in which a proposed transportation investment extends across the boundaries of more than one MPA. The written agreement shall include specific provisions for cooperatively developing and sharing information related to transportation systems performance data, the selection of performance targets, the reporting of performance targets, the reporting of system performance to be used in tracking progress toward attainment of critical outcomes for the region of the MPO (see § 450.306(d)), and the collection of data for the asset management plans for the NHS. If any part of the urbanized area is a nonattainment or maintenance area, the agreement also shall include State and local air quality agencies. The metropolitan transportation planning processes for affected MPOs should, to the maximum extent possible, reflect coordinated data collection, analysis, and planning assumptions across the MPAs. Alternatively, a single metropolitan transportation plan and/or TIP for the entire urbanized area may be developed jointly by the MPOs in cooperation with their respective planning partners. Coordination efforts and outcomes shall be documented in subsequent transmittals of the UPWP and other planning products, including the metropolitan transportation plan and TIP, to the State(s), the FHWA, and the FTA.

(f) Where the boundaries of the urbanized area or MPA extend across two or more States, the Governors with responsibility for a portion of the multistate area, the appropriate MPO(s), and the public transportation operator(s) shall coordinate transportation planning for the entire multistate area. States involved in such multistate transportation planning may:

(1) Enter into agreements or compacts, not in conflict with any law of the United States, for cooperative efforts and mutual assistance in support of activities authorized under this section as the activities pertain to interstate areas and localities within the States; and

(2) Establish such agencies, joint or otherwise, as the States may determine desirable for making the agreements and compacts effective.

(g) If part of an urbanized area that has been designated as a TMA overlaps into an adjacent MPA serving an urbanized area that is not designated as a TMA, the adjacent urbanized area shall not be treated as a TMA. However, a written agreement shall be established between the MPOs with MPA boundaries including a portion of the TMA, which clearly identifies the roles and responsibilities of each MPO in meeting specific TMA requirements (e.g., congestion management process, Surface Transportation Program funds suballocated to the urbanized area over 200,000 population, and project selection). The written agreement shall include specific provisions for cooperatively developing and sharing information related to transportation systems performance data, the selection of performance targets, the reporting of performance targets, the reporting of system performance to be used in tracking progress toward attainment of critical outcomes for the region of the MPO (see § 450.306(d)), and the collection of data for the asset management plans for the NHS.

§ 450.316 Interested parties, participation, and consultation.

(a) The MPO shall develop and use a documented participation plan that defines a process for providing individuals, affected public agencies, representatives of public transportation employees, freight shippers, providers of freight transportation services, private providers of transportation, representatives of users of public transportation, representatives of users of pedestrian walkways and bicycle transportation facilities, representatives of the disabled, and other interested parties with reasonable opportunities to be involved in the metropolitan transportation planning process.

(1) The MPO shall develop the participation plan in consultation with all interested parties and shall, at a minimum, describe explicit procedures, strategies, and desired outcomes for:

(i) Providing adequate public notice of public participation activities and time for public review and comment at key decision points, including a reasonable opportunity to comment on the proposed metropolitan transportation plan and the TIP;

(ii) Providing timely notice and reasonable access to information about transportation issues and processes;

(iii) Employing visualization techniques to describe metropolitan transportation plans and TIPs;

(iv) Making public information (technical information and meeting notices) available in electronically accessible formats and means, such as the World Wide Web;

(v) Holding any public meetings at convenient and accessible locations and times;

(vi) Demonstrating explicit consideration and response to public input received during the development of the metropolitan transportation plan and the TIP;

(vii) Seeking out and considering the needs of those traditionally underserved by existing transportation systems, such as low-income and minority households, who may face challenges accessing employment and other services;

(viii) Providing an additional opportunity for public comment, if the final metropolitan transportation plan or TIP differs significantly from the version that was made available for public comment by the MPO and raises new material issues that interested parties could not reasonably have foreseen from the public involvement efforts;

(ix) Coordinating with the statewide transportation planning public involvement and consultation processes under subpart B of this part; and

(x) Periodically reviewing the effectiveness of the procedures and strategies contained in the participation plan to ensure a full and open participation process.

(2) When significant written and oral comments are received on the draft metropolitan transportation plan and TIP (including the financial plans) as a result of the participation process in this section or the interagency consultation process required under the EPA transportation conformity regulations (40 CFR part 93, subpart A), a summary, analysis, and report on the disposition of comments shall be made as part of the final metropolitan transportation plan and TIP.

(3) A minimum public comment period of 45 calendar days shall be provided before the initial or revised participation plan is adopted by the MPO. Copies of the approved participation plan shall be provided to the FHWA and the FTA for informational purposes and shall be

posted on the World Wide Web, to the maximum extent practicable.

(b) In developing metropolitan transportation plans and TIPs, the MPO should consult with agencies and officials responsible for other planning activities within the MPA that are affected by transportation (including State and local planned growth, economic development, environmental protection, airport operations, or freight movements) or coordinate its planning process (to the maximum extent practicable) with such planning activities. In addition, the MPO shall develop the metropolitan transportation plans and TIPs with due consideration of other related planning activities within the metropolitan area, and the process shall provide for the design and delivery of transportation services within the area that are provided by:

(1) Recipients of assistance under title 49 U.S.C. Chapter 53;

(2) Governmental agencies and non-profit organizations (including representatives of the agencies and organizations) that receive Federal assistance from a source other than the U.S. Department of Transportation to provide non-emergency transportation services; and

(3) Recipients of assistance under 23 U.S.C. 201–204.

(c) When the MPA includes Indian Tribal lands, the MPO shall appropriately involve the Indian Tribal government(s) in the development of the metropolitan transportation plan and the TIP.

(d) When the MPA includes Federal public lands, the MPO shall appropriately involve the Federal land management agencies in the development of the metropolitan transportation plan and the TIP.

(e) MPOs shall, to the extent practicable, develop a documented process(es) that outlines roles, responsibilities, and key decision points for consulting with other governments and agencies, as defined in paragraphs (b), (c), and (d) of this section, which may be included in the agreement(s) developed under § 450.314.

§ 450.318 Transportation planning studies and project development.

(a) Pursuant to section 1308 of the Transportation Equity Act for the 21st Century, TEA–21 (Pub. L. 105–178), an MPO(s), State(s), or public transportation operator(s) may undertake a multimodal, systems-level corridor or subarea planning study as part of the metropolitan transportation planning process. To the extent practicable, development of these transportation planning studies shall involve consultation with, or joint efforts among, the MPO(s), State(s), and/or public transportation operator(s). The results or decisions of these transportation planning studies may be used as part of the overall project development process consistent with the National Environmental Policy Act (NEPA) of 1969 (42 U.S.C. 4321 et seq.) and associated implementing regulations (23 CFR part 771 and 40 CFR parts 1500–1508). Specifically, these corridor or subarea studies may result in producing any of the following for a proposed transportation project:

(1) Purpose and need or goals and objective statement(s);

(2) General travel corridor and/or general mode(s) definition (e.g., highway, transit, or a highway/transit combination);

(3) Preliminary screening of alternatives and elimination of unreasonable alternatives;

(4) Basic description of the environmental setting; and/or

(5) Preliminary identification of environmental impacts and environmental mitigation.

(b) Publicly available documents or other source material produced by, or in support of, the transportation planning process described in this subpart may be incorporated directly or by reference into subsequent NEPA documents, in accordance with 40 CFR 1502.21, if:

(1) The NEPA lead agencies agree that such incorporation will aid in establishing or evaluating the purpose and need for the Federal action, reasonable alternatives, cumulative or other impacts on the human and natural environment, or mitigation of these impacts; and

(2) The systems-level, corridor, or subarea planning study is conducted with:

(i) Involvement of interested State, local, Tribal, and Federal agencies;

(ii) Public review;

(iii) Reasonable opportunity to comment during the metropolitan transportation planning process and development of the corridor or subarea planning study;

(iv) Documentation of relevant decisions in a form that is identifiable and available for review during the NEPA scoping process and can be appended to or referenced in the NEPA document; and

(v) The review of the FHWA and the FTA, as appropriate.

(c) By agreement of the NEPA lead agencies, the above integration may be accomplished through tiering (as described in 40 CFR 1502.20), incorporating the subarea or corridor planning study into the draft Environmental Impact Statement (EIS) or Environmental Assessment, or other means that the NEPA lead agencies deem appropriate.

(d) Additional information to further explain the linkages between the transportation planning and project development/NEPA processes is contained in Appendix A to this part, including an explanation that it is non-binding guidance material.

§ 450.320 Development of Programmatic Mitigation Plans.

(a) An MPO may develop programmatic mitigation plans to address the potential environmental impacts of future transportation projects. The MPO will determine the scope of the programmatic mitigation plan, in consultation with the FHWA and/or the FTA and with the agency or agencies with jurisdiction and special expertise over the resources being addressed in the plan.

(1) *Scope.* (i) An MPO may develop a programmatic mitigation plan on a local, regional, ecosystem, watershed, statewide or similar scale.

(ii) The plan may encompass multiple environmental resources within a defined geographic area(s) or may focus on a specific type(s) of resource(s) such as aquatic resources, parkland, or wildlife habitat.

(iii) The plan may address or consider impacts from all projects in a defined geographic area(s) or may focus on a specific type(s) of project(s).

(2) *Contents.* The programmatic mitigation plan may include:

(i) An assessment of the existing condition of natural and human environmental resources within the area covered by the plan, including an assessment of historic and recent trends and/or any potential threats to those resources;

(ii) An identification of economic, social, and natural and human environmental resources within the geographic area that may be impacted and considered for mitigation. Examples of these resources include wetlands, streams, rivers, stormwater, parklands, cultural resources, historic resources, farmlands, and threatened or endangered species critical habitat. This may include the identification of areas of high conservation concern or value and thus worthy of avoidance;

(iii) An inventory of existing or planned environmental resource banks for the impacted resource categories such as wetland, stream, habitat, species, and an inventory of federally, State, or locally approved in-lieu-of-fee programs;

(iv) An assessment of potential opportunities to improve the overall quality of the identified environmental resources through strategic mitigation for impacts of transportation projects which may include the prioritization of parcels or areas for acquisition and/or potential resource banking sites;

(v) An adoption or development of standard measures or operating procedures for mitigating certain types of impacts; establishment of parameters for determining or calculating appropriate mitigation for certain types of impacts, such as mitigation ratios, or criteria for determining appropriate mitigation sites;

(vi) Adaptive management procedures, such as protocols or procedures that involve monitoring actual impacts against predicted impacts over time and adjusting mitigation measures in response to information gathered through the monitoring;

(vii) Acknowledgement of specific statutory or regulatory requirements that must be satisfied when determining appropriate mitigation for certain types of resources.

(b) If an MPO chooses to develop a programmatic mitigation plan then the MPO shall develop it as part of the metropolitan transportation planning process, considering the following process prior to adopting a programmatic mitigation plan:

(1) Consult with each agency with jurisdiction over the environmental resources considered in the programmatic mitigation plan;

(2) Make available a draft of the programmatic mitigation plan for review and comment by appropriate environmental resource agencies and the public;

(3) Consider comments received from such agencies and the public on the draft plan; and

(4) Address such comments in the final programmatic mitigation plan.

(c) A programmatic mitigation plan may be integrated with other plans, including watershed plans, ecosystem plans, species recovery plans, growth management plans, State Wildlife Action Plans, and land use plans.

(d) If an MPO develops a programmatic mitigation plan pursuant to this section, any Federal agency responsible for environmental reviews, permits, or approvals for a transportation project may use the recommendations in the programmatic mitigation plan when carrying out its responsibilities under the National Environmental Policy Act of 1969 (42 U.S.C. 4321 et seq.) (NEPA) and any other environmental laws and regulations.

(e) Nothing in this section limits the use of programmatic approaches for reviews under NEPA.

§ 450.322 Congestion management process in transportation management areas.

(a) The transportation planning process in a TMA shall address congestion management through a process that provides for safe and effective integrated management and operation of the multimodal transportation system, based on a cooperatively developed and implemented metropolitan-wide strategy, of new and existing transportation facilities eligible for funding under title 23 U.S.C. and title 49 U.S.C. Chapter 53 through the use of travel demand reduction and operational management strategies.

(b) The development of a congestion management process should result in multimodal system performance measures and strategies that can be reflected in the metropolitan transportation plan and the TIP.

(c) The level of system performance deemed acceptable by State and local transportation officials may vary by type of transportation facility, geographic location (metropolitan area or subarea), and/or time of day. In addition, consideration should be given to strategies that manage demand, reduce single occupant vehicle (SOV) travel, improve transportation system management and operations, and improve efficient service integration within and across modes, including highway, transit, passenger and freight rail operations, and non-motorized transport. Where the addition of general purpose lanes is determined to be an appropriate congestion management strategy, explicit consideration is to be given to the incorporation of appropriate features into the SOV project to facilitate future demand management strategies and operational improvements that will maintain the functional integrity and safety of those lanes.

(d) The congestion management process shall be developed, established, and implemented as part of the metropolitan transportation planning process that includes coordination with transportation system management and operations activities. The congestion management process shall include:

(1) Methods to monitor and evaluate the performance of the multimodal transportation system, identify the underlying causes of recurring and non-recurring congestion, identify and evaluate alternative strategies, provide information supporting the implementation of actions, and evaluate the effectiveness of implemented actions;

(2) Definition of congestion management objectives and appropriate performance measures to assess the extent of congestion and support the evaluation of the effectiveness of congestion reduction and mobility enhancement strategies for the movement of people and goods. Since levels of acceptable system performance may vary among local communities, performance measures should be tailored to the specific needs of the area and established cooperatively by the State(s), affected MPO(s), and local officials in consultation with the operators of major modes of transportation in the coverage area, including providers of public transportation;

(3) Establishment of a coordinated program for data collection and system performance monitoring to define the extent and duration of congestion, to contribute in determining the causes of congestion, and evaluate the efficiency and effectiveness of implemented actions. To the extent possible, this data collection program should be coordinated with existing data sources (including archived operational/ITS data) and coordinated with operations managers in the metropolitan area;

(4) Identification and evaluation of the anticipated performance and expected benefits of appropriate congestion management strategies that will contribute to the more effective use and improved safety of existing and future transportation systems based on the established performance measures. The following categories of strategies, or combinations of strategies, are some examples of what should be appropriately considered for each area:

(i) Demand management measures, including growth management, and congestion pricing;

(ii) Traffic operational improvements;

(iii) Public transportation improvements;

(iv) ITS technologies as related to the regional ITS architecture; and

(v) Where necessary, additional system capacity.

(5) Identification of an implementation schedule, implementation responsibilities, and possible funding sources for each strategy (or combination of strategies) proposed for implementation; and

(6) Implementation of a process for periodic assessment of the effectiveness of implemented strategies, in terms of the area's established performance

measures. The results of this evaluation shall be provided to decision makers and the public to provide guidance on selection of effective strategies for future implementation.

(e) In a TMA designated as nonattainment area for ozone or carbon monoxide pursuant to the Clean Air Act, Federal funds may not be programmed for any project that will result in a significant increase in the carrying capacity for SOVs (i.e., a new general purpose highway on a new location or adding general purpose lanes, with the exception of safety improvements or the elimination of bottlenecks), unless the project is addressed through a congestion management process meeting the requirements of this section.

(f) In TMAs designated as nonattainment for ozone or carbon monoxide, the congestion management process shall provide an appropriate analysis of reasonable (including multimodal) travel demand reduction and operational management strategies for the corridor in which a project that will result in a significant increase in capacity for SOVs (as described in paragraph (d) of this section) is proposed to be advanced with Federal funds. If the analysis demonstrates that travel demand reduction and operational management strategies cannot fully satisfy the need for additional capacity in the corridor and additional SOV capacity is warranted, then the congestion management process shall identify all reasonable strategies to manage the SOV facility safely and effectively (or to facilitate its management in the future). Other travel demand reduction and operational management strategies appropriate for the corridor, but not appropriate for incorporation into the SOV facility itself, shall also be identified through the congestion management process. All identified reasonable travel demand reduction and operational management strategies shall be incorporated into the SOV project or committed to by the State and MPO for implementation.

(g) State laws, rules, or regulations pertaining to congestion management systems or programs may constitute the congestion management process, if the FHWA and the FTA find that the State laws, rules, or regulations are consistent with, and fulfill the intent of, the purposes of 23 U.S.C. 134 and 49 U.S.C. 5303.

§ 450.324 Development and content of the metropolitan transportation plan.

(a) The metropolitan transportation planning process shall include the development of a transportation plan addressing no less than a 20-year planning horizon as of the effective date. In formulating the transportation plan, the MPO shall consider factors described in § 450.306 as the factors relate to a 20-year forecast period. In nonattainment and maintenance areas, the effective date of the transportation plan shall be the date of a conformity determination issued by the FHWA and the FTA. In attainment areas, the effective date of the transportation plan shall be its date of adoption by the MPO.

(b) The transportation plan shall include both long-range and short-range strategies/actions that provide for the development of an integrated multimodal transportation system (including accessible pedestrian walkways and bicycle transportation facilities) to facilitate the safe and efficient movement of people and goods in addressing current and future transportation demand.

(c) The MPO shall review and update the transportation plan at least every 4 years in air quality nonattainment and maintenance areas and at least every 5 years in attainment areas to confirm the transportation plan's validity and consistency with current and forecasted transportation and land use conditions and trends and to extend the forecast period to at least a 20-year planning horizon. In addition, the MPO may revise the transportation plan at any time using the procedures in this section without a requirement to extend the horizon year. The MPO shall approve the transportation plan (and any revisions) and submit it for information purposes to the Governor. Copies of any updated or revised transportation plans must be provided to the FHWA and the FTA.

(d) In metropolitan areas that are in nonattainment for ozone or carbon monoxide, the MPO shall coordinate the development of the metropolitan transportation plan with the process for developing transportation control measures (TCMs) in a State Implementation Plan (SIP).

(e) The MPO, the State(s), and the public transportation operator(s) shall validate data used in preparing other existing modal plans for providing input to the transportation plan. In updating the transportation plan, the MPO shall base the update on the latest available estimates and assumptions for population, land use, travel, employment, congestion, and economic activity. The MPO shall approve transportation plan contents and supporting analyses produced by a transportation plan update.

(f) The metropolitan transportation plan shall, at a minimum, include:

(1) The current and projected transportation demand of persons and goods in the metropolitan planning area over the period of the transportation plan;

(2) Existing and proposed transportation facilities (including major roadways, transit, multimodal and intermodal facilities, nonmotorized transportation facilities (e.g., pedestrian walkways and bicycle facilities), and intermodal connectors) that should function as an integrated metropolitan transportation system, giving emphasis to those facilities that serve important national and regional transportation functions over the period of the transportation plan;

(3) A description of the performance measures and performance targets used in assessing the performance of the transportation system in accordance with § 450.306(d);

(4) A system performance report and subsequent updates evaluating the condition and performance of the transportation system with respect to the performance targets described in § 450.306(d), including:

(i) Progress achieved by the metropolitan planning organization in meeting the performance targets in comparison with system performance recorded in previous reports, including baseline data; and

(ii) For metropolitan planning organizations that voluntarily elect to develop multiple scenarios, an analysis of how the preferred scenario has improved the conditions and performance of the transportation system and how changes in local policies and investments have impacted the costs necessary to achieve the identified performance targets.

(5) Operational and management strategies to improve the performance of existing transportation facilities to relieve vehicular congestion and maximize the safety and mobility of people and goods;

(6) Consideration of the results of the congestion management process in TMAs that meet the requirements of this subpart, including the identification of SOV projects that result from a congestion management process in TMAs that are nonattainment for ozone or carbon monoxide;

(7) Assessment of capital investment and other strategies to preserve the existing and projected future metropolitan transportation infrastructure and provide for multimodal capacity increases based on regional priorities and needs. The metropolitan transportation plan should

be informed by the financial plan and investment strategies from the State asset management plan for the NHS (as defined in 23 U.S.C. 119(e)) and investment priorities of the public transit asset management plan(s) (as discussed in 49 U.S.C. 5326). The metropolitan transportation plan may consider projects and strategies that address areas or corridors where current or projected congestion threatens the efficient functioning of key elements of the metropolitan area's transportation system;

(8) Transportation and transit enhancement activities, including transportation alternatives, as defined in 23 U.S.C. 101(a), and associated transit improvements, as described in 49 U.S.C. 5302(a), as appropriate;

(9) Design concept and design scope descriptions of all existing and proposed transportation facilities in sufficient detail, regardless of funding source, in nonattainment and maintenance areas for conformity determinations under the EPA's transportation conformity regulations (40 CFR part 93, subpart A). In all areas (regardless of air quality designation), all proposed improvements shall be described in sufficient detail to develop cost estimates;

(10) A discussion of types of potential environmental mitigation activities and potential areas to carry out these activities, including activities that may have the greatest potential to restore and maintain the environmental functions affected by the metropolitan transportation plan. The discussion may focus on policies, programs, or strategies, rather than at the project level. The MPO shall develop the discussion in consultation with Federal, State, and Tribal land management, wildlife, and regulatory agencies. The MPO may establish reasonable timeframes for performing this consultation;

(11) A financial plan that demonstrates how the adopted transportation plan can be implemented;

(i) For purposes of transportation system operations and maintenance, the financial plan shall contain system-level estimates of costs and revenue sources that are reasonably expected to be available to adequately operate and maintain the Federal-aid highways (as defined by 23 U.S.C. 101(a)(5)) and public transportation (as defined by title 49 U.S.C. Chapter 53).

(ii) For the purpose of developing the metropolitan transportation plan, the MPO, public transportation operator(s), and State shall cooperatively develop estimates of funds that will be available to support metropolitan transportation plan implementation, as required under § 450.314(a). All necessary financial resources from public and private sources that are reasonably expected to be made available to carry out the transportation plan shall be identified.

(iii) The financial plan shall include recommendations on any additional financing strategies to fund projects and programs included in the metropolitan transportation plan. In the case of new funding sources, strategies for ensuring their availability shall be identified. The financial plan may include an assessment of the appropriateness of innovative finance techniques (for example, tolling, pricing, bonding, public private partnerships, or other strategies) as revenue sources for projects in the plan.

(iv) In developing the financial plan, the MPO shall take into account all projects and strategies proposed for funding under title 23 U.S.C., title 49 U.S.C. Chapter 53 or with other Federal funds; State assistance; local sources; and private participation. Revenue and cost estimates that support the metropolitan transportation plan must use an inflation rate(s) to reflect ''year of expenditure dollars,'' based on reasonable financial principles and information, developed cooperatively by the MPO, State(s), and public transportation operator(s).

(v) For the outer years of the metropolitan transportation plan (i.e., beyond the first 10 years), the financial plan may reflect aggregate cost ranges/cost bands, as long as the future funding source(s) is reasonably expected to be available to support the projected cost ranges/cost bands.

(vi) For nonattainment and maintenance areas, the financial plan shall address the specific financial strategies required to ensure the implementation of TCMs in the applicable SIP.

(vii) For illustrative purposes, the financial plan may include additional projects that would be included in the adopted transportation plan if additional resources beyond those identified in the financial plan were to become available.

(viii) In cases that the FHWA and the FTA find a metropolitan transportation plan to be fiscally constrained and a revenue source is subsequently removed or substantially reduced (i.e., by legislative or administrative actions), the FHWA and the FTA will not withdraw the original determination of fiscal constraint; however, in such cases, the FHWA and the FTA will not act on an updated or amended metropolitan transportation plan that does not reflect the changed revenue situation; and

(12) Pedestrian walkway and bicycle transportation facilities in accordance with 23 U.S.C. 217(g).

(g) The MPO shall consult, as appropriate, with State and local agencies responsible for land use management, natural resources, environmental protection, conservation, and historic preservation concerning the development of the transportation plan. The consultation shall involve, as appropriate:

(1) Comparison of transportation plans with State conservation plans or maps, if available; or

(2) Comparison of transportation plans to inventories of natural or historic resources, if available.

(h) The metropolitan transportation plan should integrate the priorities, goals, countermeasures, strategies, or projects for the metropolitan planning area contained in the HSIP, including the SHSP required under 23 U.S.C. 148, the Public Transportation Agency Safety Plan required under 49 U.S.C. 5329(d), or an Interim Agency Safety Plan in accordance with 49 CFR part 659, as in effect until completion of the Public Transportation Agency Safety Plan, and may incorporate or reference applicable emergency relief and disaster preparedness plans and strategies and policies that support homeland security, as appropriate, to safeguard the personal security of all motorized and non-motorized users.

(i) An MPO may, while fitting the needs and complexity of its community, voluntarily elect to develop multiple scenarios for consideration as part of the development of the metropolitan transportation plan.

(1) An MPO that chooses to develop multiple scenarios under this paragraph (i) is encouraged to consider:

(i) Potential regional investment strategies for the planning horizon;

(ii) Assumed distribution of population and employment;

(iii) A scenario that, to the maximum extent practicable, maintains baseline conditions for the performance areas identified in § 450.306(d) and measures established under 23 CFR part 490;

(iv) A scenario that improves the baseline conditions for as many of the performance measures identified in § 450.306(d) as possible;

(v) Revenue constrained scenarios based on the total revenues expected to be available over the forecast period of the plan; and

(vi) Estimated costs and potential revenues available to support each scenario.

(2) In addition to the performance areas identified in section 23 U.S.C. 150(c), 49 U.S.C. 5326(c), and 5329(d), and the measures established under 23 CFR part 490, MPOs may evaluate scenarios developed under this paragraph using locally developed measures.

(j) The MPO shall provide individuals, affected public agencies, representatives of public transportation employees, freight shippers, providers of freight transportation services, private providers of transportation, representatives of users of public transportation, representatives of users of pedestrian walkways and bicycle transportation facilities, representatives of the disabled, and other interested parties with a reasonable opportunity to comment on the transportation plan using the participation plan developed under § 450.316(a).

(k) The MPO shall publish or otherwise make readily available the metropolitan transportation plan for public review, including (to the maximum extent practicable) in electronically accessible formats and means, such as the World Wide Web.

(l) A State or MPO is not required to select any project from the illustrative list of additional projects included in the financial plan under paragraph (f)(11) of this section.

(m) In nonattainment and maintenance areas for transportation-related pollutants, the MPO, as well as the FHWA and the FTA, must make a conformity determination on any updated or amended transportation plan in accordance with the Clean Air Act and the EPA transportation conformity regulations (40 CFR part 93, subpart A). A 12-month conformity lapse grace period will be implemented when an area misses an applicable deadline, in accordance with the Clean Air Act and the transportation conformity regulations (40 CFR part 93, subpart A). At the end of this 12-month grace period, the existing conformity determination will lapse. During a conformity lapse, MPOs can prepare an interim metropolitan transportation plan as a basis for advancing projects that are eligible to proceed under a conformity lapse. An interim metropolitan transportation plan consisting of eligible projects from, or consistent with, the most recent conforming transportation plan and TIP may proceed immediately without revisiting the requirements of this section, subject to interagency consultation defined in 40 CFR part 93, subpart A. An interim metropolitan transportation plan containing eligible projects that are not from, or consistent with, the most recent conforming transportation plan and TIP must meet all the requirements of this section.

§ 450.326 Development and content of the transportation improvement program (TIP).

(a) The MPO, in cooperation with the State(s) and any affected public transportation operator(s), shall develop a TIP for the metropolitan planning area. The TIP shall reflect the investment priorities established in the current metropolitan transportation plan and shall cover a period of no less than 4 years, be updated at least every 4 years, and be approved by the MPO and the Governor. However, if the TIP covers more than 4 years, the FHWA and the FTA will consider the projects in the additional years as informational. The MPO may update the TIP more frequently, but the cycle for updating the TIP must be compatible with the STIP development and approval process. The TIP expires when the FHWA/FTA approval of the STIP expires. Copies of any updated or revised TIPs must be provided to the FHWA and the FTA. In nonattainment and maintenance areas subject to transportation conformity requirements, the FHWA and the FTA, as well as the MPO, must make a conformity determination on any updated or amended TIP, in accordance with the Clean Air Act requirements and the EPA's transportation conformity regulations (40 CFR part 93, subpart A).

(b) The MPO shall provide all interested parties with a reasonable opportunity to comment on the proposed TIP as required by § 450.316(a). In addition, in nonattainment area TMAs, the MPO shall provide at least one formal public meeting during the TIP development process, which should be addressed through the participation plan described in § 450.316(a). In addition, the MPO shall publish or otherwise make readily available the TIP for public review, including (to the maximum extent practicable) in electronically accessible formats and means, such as the World Wide Web, as described in § 450.316(a).

(c) The TIP shall be designed such that once implemented, it makes progress toward achieving the performance targets established under § 450.306(d).

(d) The TIP shall include, to the maximum extent practicable, a description of the anticipated effect of the TIP toward achieving the performance targets identified in the metropolitan transportation plan, linking investment priorities to those performance targets. This discussion should be consistent with the strategies to achieve targets presented in the metropolitan transportation plan and other performance management plans such as the highway and transit asset management plans, the SHSP, the public transportation agency safety plan, the CMAQ performance plan, and if one exists, the State freight plan.

(e) The TIP shall include capital and non-capital surface transportation projects (or phases of projects) within the boundaries of the metropolitan planning area proposed for funding under 23 U.S.C. and 49 U.S.C. Chapter 53 (including transportation alternatives; associated transit improvements; Tribal Transportation Program, Federal Lands Transportation Program, and Federal Lands Access Program projects; HSIP projects; trails projects; accessible pedestrian walkways; and bicycle facilities), except the following that may be included:

(1) Safety projects funded under 23 U.S.C. 402 and 49 U.S.C. 31102;

(2) Metropolitan planning projects funded under 23 U.S.C. 104(d), and 49 U.S.C. 5305(d);

(3) State planning and research projects funded under 23 U.S.C. 505 and 49 U.S.C. 5305(e);

(4) At the discretion of the State and MPO, metropolitan planning projects funded with Surface Transportation Program funds;

(5) Emergency relief projects (except those involving substantial functional, locational, or capacity changes);

(6) National planning and research projects funded under 49 U.S.C. 5314; and

(7) Project management oversight projects funded under 49 U.S.C. 5327.

(f) The TIP shall contain all regionally significant projects requiring an action by the FHWA or the FTA whether or not the projects are to be funded under title 23 U.S.C. Chapters 1 and 2 or title 49 U.S.C. Chapter 53 (e.g., addition of an interchange to the Interstate System with State, local, and/or private funds and congressionally designated projects not funded under 23 U.S.C. or 49 U.S.C. Chapter 53). For public information and conformity purposes, the TIP shall include all regionally significant projects proposed to be funded with Federal funds other than those administered by the FHWA or the FTA, as well as all regionally significant projects to be funded with non-Federal funds.

(g) The TIP shall include, for each project or phase (e.g., preliminary engineering, environment/NEPA, right-of-way, design, or construction), the following:

(1) Sufficient descriptive material (i.e., type of work, termini, and length) to identify the project or phase;

(2) Estimated total project cost, which may extend beyond the 4 years of the TIP;

(3) The amount of Federal funds proposed to be obligated during each program year for the project or phase (for the first year, this includes the proposed category of Federal funds and source(s) of non-Federal funds. For the second, third, and fourth years, this includes the likely category or possible categories of Federal funds and sources of non-Federal funds);

(4) Identification of the agencies responsible for carrying out the project or phase;

(5) In nonattainment and maintenance areas, identification of those projects that are identified as TCMs in the applicable SIP;

(6) In nonattainment and maintenance areas, included projects shall be specified in sufficient detail (design concept and scope) for air quality analysis in accordance with the EPA transportation conformity regulations (40 CFR part 93, subpart A); and

(7) In areas with Americans with Disabilities Act required paratransit and key station plans, identification of those projects that will implement these plans.

(h) Projects that are not considered to be of appropriate scale for individual identification in a given program year may be grouped by function, work type, and/or geographic area using the applicable classifications under 23 CFR 771.117(c) and (d) and/or 40 CFR part 93. In nonattainment and maintenance areas, project classifications must be consistent with the ''exempt project'' classifications contained in the EPA transportation conformity regulations (40 CFR part 93, subpart A). In addition, projects proposed for funding under title 23 U.S.C. Chapter 2 that are not regionally significant may be grouped in one line item or identified individually in the TIP.

(i) Each project or project phase included in the TIP shall be consistent with the approved metropolitan transportation plan.

(j) The TIP shall include a financial plan that demonstrates how the approved TIP can be implemented, indicates resources from public and private sources that are reasonably expected to be made available to carry out the TIP, and recommends any additional financing strategies for needed projects and programs. In developing the TIP, the MPO, State(s), and public transportation operator(s) shall cooperatively develop estimates of funds that are reasonably expected to be available to support TIP implementation in accordance with § 450.314(a). Only projects for which construction or operating funds can reasonably be expected to be available may be included. In the case of new funding sources, strategies for ensuring their availability shall be identified. In developing the financial plan, the MPO shall take into account all projects and strategies funded under title 23 U.S.C., title 49 U.S.C. Chapter 53, and other Federal funds; and regionally significant projects that are not federally funded. For purposes of transportation operations and maintenance, the financial plan shall contain system-level estimates of costs and revenue sources that are reasonably expected to be available to adequately operate and maintain Federal-aid highways (as defined by 23 U.S.C. 101(a)(6)) and public transportation (as defined by title 49 U.S.C. Chapter 53). In addition, for illustrative purposes, the financial plan may include additional projects that would be included in the TIP if reasonable additional resources beyond those identified in the financial plan were to become available. Revenue and cost estimates for the TIP must use an inflation rate(s) to reflect ''year of expenditure dollars,'' based on reasonable financial principles and information, developed cooperatively by the MPO, State(s), and public transportation operator(s).

(k) The TIP shall include a project, or a phase of a project, only if full funding can reasonably be anticipated to be available for the project within the time period contemplated for completion of the project. In nonattainment and maintenance areas, projects included in the first 2 years of the TIP shall be limited to those for which funds are available or committed. For the TIP, financial constraint shall be demonstrated and maintained by year and shall include sufficient financial information to demonstrate which projects are to be implemented using current and/or reasonably available revenues, while federally supported facilities are being adequately operated and maintained. In the case of proposed funding sources, strategies for ensuring their availability shall be identified in the financial plan consistent with paragraph (h) of this section. In nonattainment and maintenance areas, the TIP shall give priority to eligible TCMs identified in the approved SIP in accordance with the EPA transportation conformity regulations (40 CFR part 93, subpart A) and shall provide for their timely implementation.

(l) In cases that the FHWA and the FTA find a TIP to be fiscally constrained and a revenue source is subsequently removed or substantially reduced (i.e., by legislative or administrative actions), the FHWA and the FTA will not withdraw the original determination of fiscal constraint. However, in such cases, the FHWA and the FTA will not act on an updated or amended TIP that does not reflect the changed revenue situation.

(m) The metropolitan TIP should be informed by the financial plan and investment strategies from the State asset management plan for the NHS (as defined in 23 U.S.C. 119(e)) and by the public transit asset management plan(s) (as discussed in 49 U.S.C. 5326).

(n) Procedures or agreements that distribute suballocated Surface Transportation Program funds or funds under 49 U.S.C. 5307 to individual jurisdictions or modes within the MPA by pre-determined percentages or formulas are inconsistent with the legislative provisions that require the MPO, in cooperation with the State and the public transportation operator, to develop a prioritized and financially constrained TIP and shall not be used unless they can be clearly shown to be based on considerations required to be addressed as part of the metropolitan transportation planning process.

(o) As a management tool for monitoring progress in implementing the transportation plan, the TIP should:

(1) Identify the criteria and process for prioritizing implementation of transportation plan elements (including multimodal trade-offs) for inclusion in the TIP and any changes in priorities from previous TIPs;

(2) List major projects from the previous TIP that were implemented and identify any significant delays in the planned implementation of major projects; and

(3) In nonattainment and maintenance areas, describe the progress in implementing any required TCMs, in accordance with 40 CFR part 93.

(p) In metropolitan nonattainment and maintenance areas, a 12-month conformity lapse grace period will be implemented when an area misses an applicable deadline, according to the Clean Air Act and the transportation conformity regulations (40 CFR part 93, subpart A). At the end of this 12-month grace period, the existing conformity determination will lapse. During a conformity lapse, MPOs may prepare an interim TIP as a basis for advancing projects that are eligible to proceed under a conformity lapse. An interim TIP consisting of eligible projects from, or consistent with, the most recent

conforming metropolitan transportation plan and TIP may proceed immediately without revisiting the requirements of this section, subject to interagency consultation defined in 40 CFR part 93. An interim TIP containing eligible projects that are not from, or consistent with, the most recent conforming transportation plan and TIP must meet all the requirements of this section.

(q) Projects in any of the first 4 years of the TIP may be advanced in place of another project in the first 4 years of the TIP, subject to the project selection requirements of § 450.332. In addition, the MPO may revise the TIP at any time under procedures agreed to by the State, MPO(s), and public transportation operator(s) consistent with the TIP development procedures established in this section, as well as the procedures for the MPO participation plan (see § 450.316(a)) and FHWA/FTA actions on the TIP (see § 450.330).

§ 450.328 TIP revisions and relationship to the STIP.

(a) An MPO may revise the TIP at any time under procedures agreed to by the cooperating parties consistent with the procedures established in this part for its development and approval. In nonattainment or maintenance areas for transportation-related pollutants, if a TIP amendment involves non-exempt projects (per 40 CFR part 93), or is replaced with an updated TIP, the MPO and the FHWA and the FTA must make a new conformity determination. In all areas, changes that affect fiscal constraint must take place by amendment of the TIP. The MPO shall use public participation procedures consistent with § 450.316(a) in revising the TIP, except that these procedures are not required for administrative modifications.

(b) After approval by the MPO and the Governor, the State shall include the TIP without change, directly or by reference, in the STIP required under 23 U.S.C. 135. In nonattainment and maintenance areas, the FHWA and the FTA must make a conformity finding on the TIP before it is included in the STIP. A copy of the approved TIP shall be provided to the FHWA and the FTA.

(c) The State shall notify the MPO and Federal land management agencies when it has included a TIP including projects under the jurisdiction of these agencies in the STIP.

§ 450.330 TIP action by the FHWA and the FTA.

(a) The FHWA and the FTA shall jointly find that each metropolitan TIP is consistent with the metropolitan transportation plan produced by the continuing and comprehensive transportation process carried on cooperatively by the MPO(s), the State(s), and the public transportation operator(s) in accordance with 23 U.S.C. 134 and 49 U.S.C. 5303. This finding shall be based on the self-certification statement submitted by the State and MPO under § 450.336, a review of the metropolitan transportation plan by the FHWA and the FTA, and upon other reviews as deemed necessary by the FHWA and the FTA.

(b) In nonattainment and maintenance areas, the MPO, as well as the FHWA and the FTA, shall determine conformity of any updated or amended TIP, in accordance with 40 CFR part 93. After the FHWA and the FTA issue a conformity determination on the TIP, the TIP shall be incorporated, without change, into the STIP, directly or by reference.

(c) If an MPO has not updated the metropolitan transportation plan in accordance with the cycles defined in § 450.324(c), projects may only be advanced from a TIP that was approved and found to conform (in nonattainment and maintenance areas) prior to expiration of the metropolitan transportation plan and meets the TIP update requirements of § 450.326(a). Until the MPO approves (in attainment areas) or the FHWA and the FTA issue a conformity determination on (in nonattainment and maintenance areas) the updated metropolitan transportation plan, the MPO may not amend the TIP.

(d) In the case of extenuating circumstances, the FHWA and the FTA will consider and take appropriate action on requests to extend the STIP approval period for all or part of the TIP in accordance with § 450.220(b).

(e) If an illustrative project is included in the TIP, no Federal action may be taken on that project by the FHWA and the FTA until it is formally included in the financially constrained and conforming metropolitan transportation plan and TIP.

(f) Where necessary in order to maintain or establish operations, the FHWA and the FTA may approve highway and transit operating assistance for specific projects or programs, even though the projects or programs may not be included in an approved TIP.

§ 450.332 Project selection from the TIP.

(a) Once a TIP that meets the requirements of 23 U.S.C. 134(j), 49 U.S.C. 5303(j), and § 450.326 has been developed and approved, the first year of the TIP will constitute an ''agreed to'' list of projects for project selection purposes and no further project selection action is required for the implementing agency to proceed with projects, except where the appropriated Federal funds available to the metropolitan planning area are significantly less than the authorized amounts or where there are significant shifting of projects between years. In this case, the MPO, the State, and the public transportation operator(s) if requested by the MPO, the State, or the public transportation operator(s) shall jointly develop a revised ''agreed to'' list of projects. If the State or public transportation operator(s) wishes to proceed with a project in the second, third, or fourth year of the TIP, the specific project selection procedures stated in paragraphs (b) and (c) of this section must be used unless the MPO, the State, and the public transportation operator(s) jointly develop expedited project selection procedures to provide for the advancement of projects from the second, third, or fourth years of the TIP.

(b) In metropolitan areas not designated as TMAs, the State and/or the public transportation operator(s), in cooperation with the MPO shall select projects to be implemented using title 23 U.S.C. funds (other than Tribal Transportation Program, Federal Lands Transportation Program, and Federal Lands Access Program projects) or funds under title 49 U.S.C. Chapter 53, from the approved metropolitan TIP. Tribal Transportation Program, Federal Lands Transportation Program, and Federal Lands Access Program projects shall be selected in accordance with procedures developed pursuant to 23 U.S.C. 201, 202, 203, and 204.

(c) In areas designated as TMAs, the MPO shall select all 23 U.S.C. and 49 U.S.C. Chapter 53 funded projects (excluding projects on the NHS and Tribal Transportation Program, Federal Lands Transportation Program, and Federal Lands Access Program) in consultation with the State and public transportation operator(s) from the approved TIP and in accordance with the priorities in the approved TIP. The State shall select projects on the NHS in cooperation with the MPO, from the approved TIP. Tribal Transportation Program, Federal Lands Transportation Program, and Federal Lands Access Program projects shall be selected in accordance with procedures developed pursuant to 23 U.S.C. 201, 202, 203, and 204.

(d) Except as provided in § 450.326(e) and § 450.330(f), projects not included in the federally approved STIP are not eligible for funding with funds under title 23 U.S.C. or 49 U.S.C. Chapter 53.

(e) In nonattainment and maintenance areas, priority shall be given to the timely implementation of TCMs

contained in the applicable SIP in accordance with the EPA transportation conformity regulations (40 CFR part 93, subpart A).

§ 450.334 Annual listing of obligated projects.

(a) In metropolitan planning areas, on an annual basis, no later than 90 calendar days following the end of the program year, the State, public transportation operator(s), and the MPO shall cooperatively develop a listing of projects (including investments in pedestrian walkways and bicycle transportation facilities) for which funds under 23 U.S.C. or 49 U.S.C. Chapter 53 were obligated in the preceding program year.

(b) The listing shall be prepared in accordance with § 450.314(a) and shall include all federally funded projects authorized or revised to increase obligations in the preceding program year, and shall at a minimum include the TIP information under § 450.326(g)(1) and (4) and identify, for each project, the amount of Federal funds requested in the TIP, the Federal funding that was obligated during the preceding year, and the Federal funding remaining and available for subsequent years.

(c) The listing shall be published or otherwise made available in accordance with the MPO's public participation criteria for the TIP.

§ 450.336 Self-certifications and Federal certifications.

(a) For all MPAs, concurrent with the submittal of the entire proposed TIP to the FHWA and the FTA as part of the STIP approval, the State and the MPO shall certify at least every 4 years that the metropolitan transportation planning process is being carried out in accordance with all applicable requirements including:

(1) 23 U.S.C. 134, 49 U.S.C. 5303, and this subpart;

(2) In nonattainment and maintenance areas, sections 174 and 176(c) and (d) of the Clean Air Act, as amended (42 U.S.C. 7504, 7506(c) and (d)) and 40 CFR part 93;

(3) Title VI of the Civil Rights Act of 1964, as amended (42 U.S.C. 2000d–1) and 49 CFR part 21;

(4) 49 U.S.C. 5332, prohibiting discrimination on the basis of race, color, creed, national origin, sex, or age in employment or business opportunity;

(5) Section 1101(b) of MAP–21 (Pub. L. 112–141) and 49 CFR part 26 regarding the involvement of disadvantaged business enterprises in DOT funded projects;

(6) 23 CFR part 230, regarding the implementation of an equal employment opportunity program on Federal and Federal-aid highway construction contracts;

(7) The provisions of the Americans with Disabilities Act of 1990 (42 U.S.C. 12101 et seq.) and 49 CFR parts 27, 37, and 38;

(8) The Older Americans Act, as amended (42 U.S.C. 6101), prohibiting discrimination on the basis of age in programs or activities receiving Federal financial assistance;

(9) Section 324 of title 23 U.S.C. regarding the prohibition of discrimination based on gender; and

(10) Section 504 of the Rehabilitation Act of 1973 (29 U.S.C. 794) and 49 CFR part 27 regarding discrimination against individuals with disabilities.

(b) In TMAs, the FHWA and the FTA jointly shall review and evaluate the transportation planning process for each TMA no less than once every 4 years to determine if the process meets the requirements of applicable provisions of Federal law and this subpart.

(1) After review and evaluation of the TMA planning process, the FHWA and FTA shall take one of the following actions:

(i) If the process meets the requirements of this part and the MPO and the Governor have approved a TIP, jointly certify the transportation planning process;

(ii) If the process substantially meets the requirements of this part and the MPO and the Governor have approved a TIP, jointly certify the transportation planning process subject to certain specified corrective actions being taken; or

(iii) If the process does not meet the requirements of this part, jointly certify the planning process as the basis for approval of only those categories of programs or projects that the FHWA and the FTA jointly determine, subject to certain specified corrective actions being taken.

(2) If, upon the review and evaluation conducted under paragraph (b)(1)(iii) of this section, the FHWA and the FTA do not certify the transportation planning process in a TMA, the Secretary may withhold up to 20 percent of the funds attributable to the metropolitan planning area of the MPO for projects funded under title 23 U.S.C. and title 49 U.S.C. Chapter 53 in addition to corrective actions and funding restrictions. The withheld funds shall be restored to the MPA when the metropolitan transportation planning process is certified by the FHWA and FTA, unless the funds have lapsed.

(3) A certification of the TMA planning process will remain in effect for 4 years unless a new certification determination is made sooner by the FHWA and the FTA or a shorter term is specified in the certification report.

(4) In conducting a certification review, the FHWA and the FTA shall provide opportunities for public involvement within the metropolitan planning area under review. The FHWA and the FTA shall consider the public input received in arriving at a decision on a certification action.

(5) The FHWA and the FTA shall notify the MPO(s), the State(s), and public transportation operator(s) of the actions taken under paragraphs (b)(1) and (2) of this section. The FHWA and the FTA will update the certification status of the TMA when evidence of satisfactory completion of a corrective action(s) is provided to the FHWA and the FTA.

§ 450.338 Applicability of NEPA to metropolitan transportation plans and programs.

Any decision by the Secretary concerning a metropolitan transportation plan or TIP developed through the processes provided for in 23 U.S.C. 134, 49 U.S.C. 5303, and this subpart shall not be considered to be a Federal action subject to review under the National Environmental Policy Act of 1969 (42 U.S.C. 4321 et seq.).

§ 450.340 Phase-in of new requirements.

(a) Prior [2 years after the publication date of the final rule], an MPO may adopt a metropolitan transportation plan that has been developed using the SAFETEA–LU requirements or the provisions and requirements of this part. On or after [2 years after the publication date of the final rule], an MPO may not adopt a metropolitan transportation plan that has not been developed according to the provisions and requirements of this part.

(b) Prior [2 years after the publication date of the final rule], FHWA/FTA may determine the conformity of, or approve as part of a STIP, a TIP that has been developed using SAFETEA–LU requirements or the provisions and requirements of this part. On or after [2 years after the publication date of the final rule], FHWA/FTA may only determine the conformity of, or approve as part of a STIP, a TIP that has been developed according to the provisions and requirements of this part, regardless of when the MPO developed the TIP.

(c) On and after [2 years after the publication date of the final rule], the FHWA and the FTA will take action (i.e., conformity determinations and STIP approvals) on an updated or amended TIP developed under the provisions of this part, even if the MPO

has not yet adopted a new metropolitan transportation plan under the provisions of this part, as long as the underlying transportation planning process is consistent with the requirements in the MAP–21.

(d) On or after [2 years after the publication date of the final rule], an MPO may make an administrative modification to a TIP that conforms to either the SAFETEA–LU or to the provisions and requirements of this part.

(e) Two years from the effective date of each rule establishing performance measures under 23 U.S.C. 150(c), 49 U.S.C. 5326, and 49 U.S.C. 5329 FHWA/FTA will only determine the conformity of, or approve as part of a STIP, a TIP that is based on a metropolitan transportation planning process that meets the performance-based planning requirements in this part and in such a rule.

(f) Prior to 2 years from the effective date of each rule establishing performance measures under 23 U.S.C. 150(c), 49 U.S.C. 5326, or 49 U.S.C. 5329, an MPO may adopt a metropolitan transportation plan that has been developed using the SAFETEA–LU requirements or the performance-based planning requirements of this part and in such a rule. Two years on or after the effective date of each rule establishing performance measures under 23 U.S.C. 150(c), 49 U.S.C. 5326, or 49 U.S.C. 5329, an MPO may only adopt a metropolitan transportation plan that has been developed according to the performance-based provisions and requirements of this part and in such a rule.

(g) A newly designated TMA shall implement the congestion management process described in § 450.322 within 18 months of designation.

Appendix A to Part 450—Linking the Transportation Planning and NEPA Processes

Background and Overview

This Appendix provides additional information to explain the linkage between the transportation planning and project development/National Environmental Policy Act (NEPA) processes. It is intended to be non-binding and should not be construed as a rule of general applicability.

For 40 years, the Congress has directed that federally-funded highway and transit projects must flow from metropolitan and statewide transportation planning processes (pursuant to 23 U.S.C. 134–135 and 49 U.S.C. 5303–5306). Over the years, the Congress has refined and strengthened the transportation planning process as the foundation for project decisions, emphasizing public involvement, consideration of environmental and other factors, and a Federal role that oversees the transportation planning process but does not second-guess the content of transportation plans and programs.

Despite this statutory emphasis on transportation planning, the environmental analyses produced to meet the requirements of the NEPA of 1969 (42 U.S.C. 4231 et seq.) have often been conducted de novo, disconnected from the analyses used to develop long-range transportation plans, statewide and metropolitan Transportation Improvement Programs (STIPs/TIPs), or planning-level corridor/subarea/feasibility studies. When the NEPA and transportation planning processes are not well coordinated, the NEPA process may lead to the development of information that is more appropriately developed in the planning process, resulting in duplication of work and delays in transportation improvements.

The purpose of this Appendix is to change this culture, by supporting congressional intent that statewide and metropolitan transportation planning should be the foundation for highway and transit project decisions. This Appendix was crafted to recognize that transportation planning processes vary across the country. This document provides details on how information, analysis, and products from transportation planning can be incorporated into and relied upon in NEPA documents under existing laws, regardless of when the Notice of Intent has been published. This Appendix presents environmental review as a continuum of sequential study, refinement, and expansion performed in transportation planning and during project development/NEPA, with information developed and conclusions drawn in early stages utilized in subsequent (and more detailed) review stages.

The information below is intended for use by State departments of transportation (State DOTs), metropolitan planning organizations (MPOs), and public transportation operators to clarify the circumstances under which transportation planning level choices and analyses can be adopted or incorporated into the process required by NEPA. Additionally, the FHWA and the FTA will work with Federal environmental, regulatory, and resource agencies to incorporate the principles of this Appendix in their day-to-day NEPA policies and procedures related to their involvement in highway and transit projects.

This Appendix does not extend NEPA requirements to transportation plans and programs. The Transportation Efficiency Act for the 21st Century (TEA–21) and the Safe, Accountable, Flexible, Efficient Transportation Equity Act: A Legacy for Users (SAFETEA–LU) specifically exempted transportation plans and programs from NEPA review. Therefore, initiating the NEPA process as part of, or concurrently with, a transportation planning study does not subject transportation plans and programs to NEPA.

Implementation of this Appendix by States, MPOs, and public transportation operators is voluntary. The degree to which studies, analyses, or conclusions from the transportation planning process can be incorporated into the project development/NEPA processes will depend upon how well they meet certain standards established by NEPA regulations and guidance. While some transportation planning processes already meet these standards, others will need some modification.

The remainder of this Appendix document utilizes a ''Question and Answer'' format, organized into three primary categories (''Procedural Issues,'' ''Substantive Issues,'' and ''Administrative Issues'').

I. Procedural Issues

1. In what format should the transportation planning information be included?

To be included in the NEPA process, work from the transportation planning process must be documented in a form that can be appended to the NEPA document or incorporated by reference. Documents may be incorporated by reference if they are readily available so as to not impede agency or public review of the action. Any document incorporated by reference must be ''reasonably available for inspection by potentially interested persons within the time allowed for comment.'' Incorporated materials must be cited in the NEPA document and their contents briefly described, so that the reader understands why the document is cited and knows where to look for further information. To the extent possible, the documentation should be in a form such as official actions by the MPO, State DOT, or public transportation operator and/or correspondence within and among the organizations involved in the transportation planning process.

2. What is a reasonable level of detail for a planning product that is intended to be used in a NEPA document? How does this level of detail compare to what is considered a full NEPA analysis?

For purposes of transportation planning alone, a planning-level analysis does not need to rise to the level of detail required in the NEPA process. Rather, it needs to be accurate and up-to-date, and should adequately support recommended improvements in the statewide or metropolitan long-range transportation plan. The SAFETEA–LU requires transportation planning processes to focus on setting a context and following acceptable procedures. For example, the SAFETEA–LU requires a ''discussion of the types of potential environmental mitigation activities'' and potential areas for their implementation, rather than details on specific strategies. The SAFETEA–LU also emphasizes consultation with Federal, State, and Tribal land management, wildlife, and regulatory agencies.

However, the Environmental Assessment (EA) or Environmental Impact Statement (EIS) ultimately will be judged by the standards applicable under the NEPA regulations and guidance from the Council on Environmental Quality (CEQ). To the extent the information incorporated from the transportation planning process, standing alone, does not contain all of the information or analysis required by NEPA, then it will need to be supplemented by other information contained in the EIS or EA that

would, in conjunction with the information from the plan, collectively meet the requirements of NEPA. The intent is not to require NEPA studies in the transportation planning process. As an option, the NEPA analyses prepared for project development can be integrated with transportation planning studies (see the response to Question 9 for additional information).

3. What type and extent of involvement from Federal, Tribal, State, and local environmental, regulatory, and resource agencies is needed in the transportation planning process in order for planning-level decisions to be more readily accepted in the NEPA process?

Sections 3005, 3006, and 6001 of the SAFETEA–LU established formal consultation requirements for MPOs and State DOTs to employ with environmental, regulatory, and resource agencies in the development of long-range transportation plans. For example, metropolitan transportation plans now ''shall include a discussion of the types of potential environmental mitigation activities and potential areas to carry out these activities, including activities that may have the greatest potential to restore and maintain the environmental functions affected by the [transportation] plan,'' and that these planning-level discussions ''shall be developed in consultation with Federal, State, and Tribal land management, wildlife, and regulatory agencies.'' In addition, MPOs ''shall consult, as appropriate, with State and local agencies responsible for land use management, natural resources, environmental protection, conservation, and historic preservation concerning the development of a long-range transportation plan,'' and that this consultation ''shall involve, as appropriate, comparison of transportation plans with State conservation plans or maps, if available, or comparison of transportation plans to inventories of natural or historic resources, if available.'' Similar SAFETEA–LU language addresses the development of the long-range statewide transportation plan, with the addition of Tribal conservation plans or maps to this planning-level ''comparison.''

In addition, section 6002 of the SAFETEA–LU established several mechanisms for increased efficiency in environmental reviews for project decisionmaking. For example, the term ''lead agency'' collectively means the U.S. Department of Transportation and a State or local governmental entity serving as a joint lead agency for the NEPA process. In addition, the lead agency is responsible for inviting and designating ''participating agencies'' (i.e., other Federal or non-Federal agencies that may have an interest in the proposed project). Any Federal agency that is invited by the lead agency to participate in the environmental review process for a project shall be designated as a participating agency by the lead agency unless the invited agency informs the lead agency, in writing, by the deadline specified in the invitation that the invited agency:

(a) Has no jurisdiction or authority with respect to the project; (b) has no expertise or information relevant to the project; and (c) does not intend to submit comments on the project.

Past successful examples of using transportation planning products in NEPA analysis are based on early and continuous involvement of environmental, regulatory, and resource agencies. Without this early coordination, environmental, regulatory, and resource agencies are more likely to expect decisions made or analyses conducted in the transportation planning process to be revisited during the NEPA process. Early participation in transportation planning provides environmental, regulatory, and resource agencies better insight into the needs and objectives of the locality. Additionally, early participation provides an important opportunity for environmental, regulatory, and resource agency concerns to be identified and addressed early in the process, such as those related to permit applications. Moreover, Federal, Tribal, State, and local environmental, regulatory, and resource agencies are able to share data on particular resources, which can play a critical role in determining the feasibility of a transportation solution with respect to environmental impacts. The use of other agency planning outputs can result in a transportation project that could support multiple goals (transportation, environmental, and community). Further, planning decisions by these other agencies may have impacts on long-range transportation plans and/or the STIP/TIP, thereby providing important input to the transportation planning process and advancing integrated decisionmaking.

4. What is the procedure for using decisions or analyses from the transportation planning process?

The lead agencies jointly decide, and must agree, on what processes and consultation techniques are used to determine the transportation planning products that will be incorporated into the NEPA process. At a minimum, a robust scoping/early coordination process (which explains to Federal and State environmental, regulatory, and resource agencies and the public the information and/or analyses utilized to develop the planning products, how the purpose and need was developed and refined, and how the design concept and scope were determined) should play a critical role in leading to informed decisions by the lead agencies on the suitability of the transportation planning information, analyses, documents, and decisions for use in the NEPA process. As part of a rigorous scoping/early coordination process, the FHWA and the FTA should ensure that the transportation planning results are appropriately documented, shared, and used.

5. To what extent can the FHWA/FTA provide up-front assurance that decisions and additional investments made in the transportation planning process will allow planning-level decisions and analyses to be used in the NEPA process?

There are no guarantees. However, the potential is greatly improved for transportation planning processes that address the ''3–C'' planning principles (comprehensive, cooperative, and continuous); incorporate the intent of NEPA through the consideration of natural, physical, and social effects; involve environmental, regulatory, and resource agencies; thoroughly document the transportation planning process information, analysis, and decision; and vet the planning results through the applicable public involvement processes.

6. What considerations will the FHWA/FTA take into account in their review of transportation planning products for acceptance in project development/NEPA?

The FHWA and the FTA will give deference to decisions resulting from the transportation planning process if the FHWA and FTA determine that the planning process is consistent with the ''3–C'' planning principles and when the planning study process, alternatives considered, and resulting decisions have a rational basis that is thoroughly documented and vetted through the applicable public involvement processes. Moreover, any applicable program-specific requirements (e.g., those of the Congestion Mitigation and Air Quality Improvement Program or the FTA's Capital Investment Grant program) also must be met.

The NEPA requires that the FHWA and the FTA be able to stand behind the overall soundness and credibility of analyses conducted and decisions made during the transportation planning process if they are incorporated into a NEPA document. For example, if systems-level or other broad objectives or choices from the transportation plan are incorporated into the purpose and need statement for a NEPA document, the FHWA and the FTA should not revisit whether these are the best objectives or choices among other options. Rather, the FHWA and the FTA review would include making sure that objectives or choices derived from the transportation plan were: Based on transportation planning factors established by Federal law; reflect a credible and articulated planning rationale; founded on reliable data; and developed through transportation planning processes meeting FHWA and FTA statutory and regulatory requirements. In addition, the basis for the goals and choices must be documented and included in the NEPA document. The FHWA/FTA reviewers do not need to review whether assumptions or analytical methods used in the studies are the best available, but, instead, need to assure that such assumptions or analytical methods are reasonable, scientifically acceptable, and consistent with goals, objectives, and policies set forth in long-range transportation plans. This review would include determining whether: (a) Assumptions have a rational basis and are up-to-date and (b) data, analytical methods, and modeling techniques are reliable, defensible, reasonably current, and meet data quality requirements.

II. Substantive Issues

General Issues To Be Considered

7. What should be considered in order to rely upon transportation planning studies in NEPA?

The following questions should be answered prior to accepting studies conducted during the transportation planning process for use in NEPA. While not a ''checklist,'' these questions are intended to guide the practitioner's analysis of the planning products:

- How much time has passed since the planning studies and corresponding decisions were made?
- Were the future year policy assumptions used in the transportation planning process related to land use, economic development, transportation costs, and network expansion consistent with those to be used in the NEPA process?
- Is the information still relevant/valid?
- What changes have occurred in the area since the study was completed?
- Is the information in a format that can be appended to an environmental document or reformatted to do so?
- Are the analyses in a planning-level report or document based on data, analytical methods, and modeling techniques that are reliable, defensible, and consistent with those used in other regional transportation studies and project development activities?
- Were the FHWA and FTA, other agencies, and the public involved in the relevant planning analysis and the corresponding planning decisions?
- Were the planning products available to other agencies and the public during NEPA scoping?
- During NEPA scoping, was a clear connection between the decisions made in planning and those to be made during the project development stage explained to the public and others? What was the response?
- Are natural resource and land use plans being informed by transportation planning products, and vice versa?

Purpose and Need

8. How can transportation planning be used to shape a project's purpose and need in the NEPA process?

A sound transportation planning process is the primary source of the project purpose and need. Through transportation planning, State and local governments, with involvement of stakeholders and the public, establish a vision for the region's future transportation system, define transportation goals and objectives for realizing that vision, decide which needs to address, and determine the timeframe for addressing these issues. The transportation planning process also provides a potential forum to define a project's purpose and need by framing the scope of the problem to be addressed by a proposed project. This scope may be further refined during the transportation planning process as more information about the transportation need is collected and consultation with the public and other stakeholders clarifies other issues and goals for the region.

23 U.S.C. 139(f), as amended by the SAFETEA–LU Section 6002, provides additional focus regarding the definition of the purpose and need and objectives. For example, the lead agency, as early as practicable during the environmental review process, shall provide an opportunity for involvement by participating agencies and the public in defining the purpose and need for a project. The statement of purpose and need shall include a clear statement of the objectives that the proposed action is intended to achieve, which may include: (a) Achieving a transportation objective identified in an applicable statewide or metropolitan transportation plan; (b) supporting land use, economic development, or growth objectives established in applicable Federal, State, local, or Tribal plans; and (c) serving national defense, national security, or other national objectives, as established in Federal laws, plans, or policies.

The transportation planning process can be utilized to develop the purpose and need in the following ways:

(a) Goals and objectives from the transportation planning process may be part of the project's purpose and need statement;

(b) A general travel corridor or general mode or modes (e.g., highway, transit, or a highway/transit combination) resulting from planning analyses may be part of the project's purpose and need statement;

(c) If the financial plan for a metropolitan transportation plan indicates that funding for a specific project will require special funding sources (e.g., tolls or public-private financing), such information may be included in the purpose and need statement; or

(d) The results of analyses from management systems (e.g., congestion, pavement, bridge, and/or safety) may shape the purpose and need statement.

The use of these planning-level goals and choices must be appropriately explained during NEPA scoping and in the NEPA document.

Consistent with NEPA, the purpose and need statement should be a statement of a transportation problem, not a specific solution. However, the purpose and need statement should be specific enough to generate alternatives that may potentially yield real solutions to the problem at-hand. A purpose and need statement that yields only one alternative may indicate a purpose and need that is too narrowly defined.

Short of a fully integrated transportation decisionmaking process, many State DOTs develop information for their purpose and need statements when implementing interagency NEPA/Section 404 process merger agreements. These agreements may need to be expanded to include commitments to share and utilize transportation planning products when developing a project's purpose and need.

9. Under what conditions can the NEPA process be initiated in conjunction with transportation planning studies?

The NEPA process may be initiated in conjunction with transportation planning studies in a number of ways. A common method is the ''tiered EIS,'' in which the first-tier EIS evaluates general travel corridors, modes, and/or packages of projects at a planning level of detail, leading to the refinement of purpose and need and, ideally, selection of the design concept and scope for a project or series of projects. Subsequently, second-tier NEPA review(s) of the resulting projects would be performed in the usual way. The first-tier EIS uses the NEPA process as a tool to involve environmental, regulatory, and resource agencies and the public in the planning decisions, as well as to ensure the appropriate consideration of environmental factors in these planning decisions.

Corridor or subarea analyses/studies are another option when the long-range transportation plan leaves open the possibility of multiple approaches to fulfill its goals and objectives. In such cases, the formal NEPA process could be initiated through publication of a NOI in conjunction with a corridor or subarea planning study.

Alternatives

10. In the context of this Appendix, what is the meaning of the term ''alternatives''?

This Appendix uses the term ''alternatives'' as specified in the NEPA regulations (40 CFR 1502.14), where it is defined in its broadest sense to include everything from major modal alternatives and location alternatives to minor design changes that would mitigate adverse impacts. This Appendix does not use the term as it is used in many other contexts (e.g., ''prudent and feasible alternatives'' under Section 4(f) of the Department of Transportation Act or the ''Least Environmentally Damaging Practicable Alternative'' under the Clean Water Act.

11. Under what circumstances can alternatives be eliminated from detailed consideration during the NEPA process based on information and analysis from the transportation planning process?

There are two ways in which the transportation planning process can begin limiting the alternative solutions to be evaluated during the NEPA process: (a) Shaping the purpose and need for the project; or (b) evaluating alternatives during planning studies and eliminating some of the alternatives from detailed study in the NEPA process prior to its start. Each approach requires careful attention, and is summarized below.

(a) Shaping the Purpose and Need for the Project: The transportation planning process should shape the purpose and need and, thereby, the range of reasonable alternatives. With proper documentation and public involvement, a purpose and need derived from the planning process can legitimately narrow the alternatives analyzed in the NEPA process. See the response to Question 8 for further discussion on how the planning process can shape the purpose and need used in the NEPA process.

For example, the purpose and need may be shaped by the transportation planning process in a manner that consequently narrows the range of alternatives that must be considered in detail in the NEPA document when:

(1) The transportation planning process has selected a general travel corridor as best

addressing identified transportation problems and the rationale for the determination in the planning document is reflected in the purpose and need statement of the subsequent NEPA document;

(2) The transportation planning process has selected a general mode (e.g., highway, transit, or a highway/transit combination) that accomplishes its goals and objectives, and these documented determinations are reflected in the purpose and need statement of the subsequent NEPA document; or

(3) The transportation planning process determines that the project needs to be funded by tolls or other non-traditional funding sources in order for the long-range transportation plan to be fiscally constrained or identifies goals and objectives that can only be met by toll roads or other non-traditional funding sources, and that determination of those goals and objectives is reflected in the purpose and need statement of the subsequent NEPA document.

(b) Evaluating and Eliminating Alternatives During the Transportation Planning Process: The evaluation and elimination of alternatives during the transportation planning process can be incorporated by reference into a NEPA document under certain circumstances. In these cases, the planning study becomes part of the NEPA process and provides a basis for screening out alternatives. As with any part of the NEPA process, the analysis of alternatives to be incorporated from the process must have a rational basis that has been thoroughly documented (including documentation of the necessary and appropriate vetting through the applicable public involvement processes). This record should be made available for public review during the NEPA scoping process.

See responses to Questions 4, 5, 6, and 7 of this appendix for additional elements to consider with respect to acceptance of planning products for NEPA documentation and the response to Question 12 of this appendix on the information or analysis from the transportation planning process necessary for supporting the elimination of an alternative(s) from detailed consideration in the NEPA process.

Development of planning Alternatives Analysis studies, required prior to MAP–21 for projects seeking funds through FTA's Capital Investment Grant program, are now optional, but may still be used to narrow the alternatives prior to the NEPA review, just as other planning studies may be used. In fact, through planning studies, FTA may be able to narrow the alternatives considered in detail in the NEPA document to the No-Build (No Action) alternative and the Locally Preferred Alternative. If the planning process has included the analysis and stakeholder involvement that would be undertaken in a first tier NEPA process, then the alternatives screening conducted in the transportation planning process may be incorporated by reference, described, and relied upon in the project-level NEPA document. At that point, the project-level NEPA analysis can focus on the remaining alternatives.

12. What information or analysis from the transportation planning process is needed in an EA or EIS to support the elimination of an alternative(s) from detailed consideration?

The section of the EA or EIS that discusses alternatives considered but eliminated from detailed consideration should:

(a) Identify any alternatives eliminated during the transportation planning process (this could include broad categories of alternatives, as when a long-range transportation plan selects a general travel corridor based on a corridor study, thereby eliminating all alternatives along other alignments);

(b) Briefly summarize the reasons for eliminating the alternative; and

(c) Include a summary of the analysis process that supports the elimination of alternatives (the summary should reference the relevant sections or pages of the analysis or study) and incorporate it by reference or append it to the NEPA document.

Any analyses or studies used to eliminate alternatives from detailed consideration should be made available to the public and participating agencies during the NEPA scoping process and should be reasonably available during comment periods.

Alternatives passed over during the transportation planning process because they are infeasible or do not meet the NEPA ''purpose and need'' can be omitted from the detailed analysis of alternatives in the NEPA document, as long as the rationale for elimination is explained in the NEPA document. Alternatives that remain ''reasonable'' after the planning-level analysis must be addressed in the EIS, even when they are not the preferred alternative. When the proposed action evaluated in an EA involves unresolved conflicts concerning alternative uses of available resources, NEPA requires that appropriate alternatives be studied, developed, and described.

Affected Environment and Environmental Consequences

13. What types of planning products provide analysis of the affected environment and environmental consequences that are useful in a project-level NEPA analysis and document?

The following planning products are valuable inputs to the discussion of the affected environment and environmental consequences (both its current state and future state in the absence of the proposed action) in the project-level NEPA analysis and document:

- Regional development and growth analyses;
- Local land use, growth management, or development plans; and
- Population and employment projections.

The following are types of information, analysis, and other products from the transportation planning process that can be used in the discussion of the affected environment and environmental consequences in an EA or EIS:

(a) Geographic information system (GIS) overlays showing the past, current, or predicted future conditions of the natural and built environments;

(b) Environmental scans that identify environmental resources and environmentally sensitive areas;

(c) Descriptions of airsheds and watersheds;

(d) Demographic trends and forecasts;

(e) Projections of future land use, natural resource conservation areas, and development; and

(f) The outputs of natural resource planning efforts, such as wildlife conservation plans, watershed plans, special area management plans, and multiple species habitat conservation plans.

However, in most cases, the assessment of the affected environment and environmental consequences conducted during the transportation planning process will not be detailed or current enough to meet NEPA standards and, thus, the inventory and evaluation of affected resources and the analysis of consequences of the alternatives will need to be supplemented with more refined analysis and possibly site-specific details during the NEPA process.

14. What information from the transportation planning process is useful in describing a baseline for the NEPA analysis of indirect and cumulative impacts?

Because the nature of the transportation planning process is to look broadly at future land use, development, population increases, and other growth factors, the planning analysis can provide the basis for the assessment of indirect and cumulative impacts required under NEPA. The consideration in the transportation planning process of development, growth, and consistency with local land use, growth management, or development plans, as well as population and employment projections, provides an overview of the multitude of factors in an area that are creating pressures not only on the transportation system, but on the natural ecosystem and important environmental and community resources. An analysis of all reasonably foreseeable actions in the area also should be a part of the transportation planning process. This planning-level information should be captured and utilized in the analysis of indirect and cumulative impacts during the NEPA process.

To be used in the analysis of indirect and cumulative impacts, such information should:

(a) Be sufficiently detailed that differences in consequences of alternatives can be readily identified;

(b) Be based on current data (e.g., data from the most recent Census) or be updated by additional information;

(c) Be based on reasonable assumptions that are clearly stated; and/or

(d) Rely on analytical methods and modeling techniques that are reliable, defensible, and reasonably current.

Environmental Mitigation

15. How can planning-level efforts best support advance mitigation, mitigation banking, and priorities for environmental mitigation investments?

A lesson learned from efforts to establish mitigation banks and advance mitigation

agreements and alternative mitigation options is the importance of beginning interagency discussions during the transportation planning process. Development pressures, habitat alteration, complicated real estate transactions, and competition for potential mitigation sites by public and private project proponents can encumber the already difficult task of mitigating for ''like'' value and function and reinforce the need to examine mitigation strategies as early as possible.

Robust use of remote sensing, GIS, and decision support systems for evaluating conservation strategies are all contributing to the advancement of natural resource and environmental planning. The outputs from environmental planning can now better inform transportation planning processes, including the development of mitigation strategies, so that transportation and conservation goals can be optimally met. For example, long-range transportation plans can be screened to assess the effect of general travel corridors or density, on the viability of sensitive plant and animal species or habitats. This type of screening provides a basis for early collaboration among transportation and environmental staffs, the public, and regulatory agencies to explore areas where impacts must be avoided and identify areas for mitigation investments. This can lead to mitigation strategies that are both more economical and more effective from an environmental stewardship perspective than traditional project-specific mitigation measures.

III. Administrative Issues

16. Are federal funds eligible to pay for these additional, or more in depth, environmental studies in transportation planning?

Yes. For example, the following FHWA and FTA funds may be utilized for conducting environmental studies and analyses within transportation planning:

- FHWA planning and research funds, as defined under 23 CFR Part 420 (e.g., Metropolitan Planning (PL), Statewide Planning and Research (SPR), National Highway System (NHS), Surface Transportation Program (STP), and Equity Bonus); and
- FTA planning and research funds (49 U.S.C. 5303 and 49 U.S.C. 5313(b)), urban formula funds (49 U.S.C. 5307), and (in limited circumstances) transit capital investment funds (49 U.S.C. 5309).

The eligible transportation planning-related uses of these funds may include: (a) Conducting feasibility or subarea/corridor needs studies and (b) developing system-wide environmental information/inventories (e.g., wetland banking inventories or standards to identify historically significant sites). Particularly in the case of PL and SPR funds, the proposed expenditure must be closely related to the development of transportation plans and programs under 23 U.S.C. 134–135 and 49 U.S.C. 5303–5306.

For FHWA funding programs, once a general travel corridor or specific project has progressed to a point in the preliminary engineering/NEPA phase that clearly extends beyond transportation planning, additional in-depth environmental studies must be funded through the program category for which the ultimate project qualifies (e.g., NHS, STP, Interstate Maintenance, and/or Bridge), rather than PL or SPR funds.

Another source of funding is FHWA's Transportation Enhancement program, which may be used for activities such as: Conducting archeological planning and research; developing inventories such as those for historic bridges and highways, and other surface transportation-related structures; conducting studies to determine the extent of water pollution due to highway runoff; and conducting studies to reduce vehicle-caused wildlife mortality while maintaining habitat connectivity.

The FHWA and the FTA encourage State DOTs, MPOs, and public transportation operators to seek partners for some of these studies from environmental, regulatory, and resource agencies, non-government organizations, and other government and private sector entities with similar data needs, or environmental interests. In some cases, these partners may contribute data and expertise to the studies, as well as funding.

17. What staffing or organizational arrangements may be helpful in allowing planning products to be accepted in the NEPA process?

Certain organizational and staffing arrangements may support a more integrated approach to the planning/NEPA decisionmaking continuum. In many cases, planning organizations do not have environmental expertise on staff or readily accessible. Likewise, the review and regulatory responsibilities of many environmental, regulatory, and resource agencies make involvement in the transportation planning process a challenge for staff resources. These challenges may be partially met by improved use of the outputs of each agency's planning resources and by augmenting their capabilities through greater use of GIS and remote sensing technologies (see *http://www.gis.fhwa.dot.gov/* for additional information on the use of GIS). Sharing databases and the planning products of local land use decision-makers and State and Federal environmental, regulatory, and resource agencies also provide efficiencies in acquiring and sharing the data and information needed for both transportation planning and NEPA work.

Additional opportunities such as shared staff, training across disciplines, and (in some cases) reorganizing to eliminate structural divisions between planning and NEPA practitioners may also need to be considered in order to better integrate NEPA considerations into transportation planning studies. The answers to the following two questions also contain useful information on training and staffing opportunities.

18. How have environmental, regulatory, and resource agency liaisons (federally- and state DOT-funded positions) and partnership agreements been used to provide the expertise and interagency participation needed to enhance the consideration of environmental factors in the planning process?

For several years, States have utilized Federal and State transportation funds to support focused and accelerated project review by a variety of local, State, Tribal, and Federal agencies. While Section 1309(e) of the TEA–21 and its successor in SAFETEA–LU section 6002 speak specifically to transportation project streamlining, there are other authorities that have been used to fund positions, such as the Intergovernmental Cooperation Act (31 U.S.C. 6505). In addition, long-term, on-call consultant contracts can provide backfill support for staff that are detailed to other parts of an agency for temporary assignments. At last count (as of 2003), 246 positions were being funded. Additional information on interagency funding agreements is available at: *http://environment.fhwa.dot.gov/strmlng/igdocs/index.htm.*

Moreover, every State has advanced a variety of stewardship and streamlining initiatives that necessitate early involvement of environmental, regulatory, and resource agencies in the project development process. Such process improvements have: Addressed the exchange of data to support avoidance and impact analysis; established formal and informal consultation and review schedules; advanced mitigation strategies; and resulted in a variety of programmatic reviews. Interagency agreements and workplans have evolved to describe performance objectives, as well as specific roles and responsibilities related to new streamlining initiatives. Some States have improved collaboration and efficiency by co-locating environmental, regulatory, and resource and transportation agency staff.

19. What training opportunities are available to MPOs, state DOTs, public transportation operators and environmental, regulatory, and resource agencies to assist in their understanding of the transportation planning and NEPA processes?

Both the FHWA and the FTA offer a variety of transportation planning, public involvement, and NEPA courses through the National Highway Institute and/or the National Transit Institute. Of particular note is the Linking Planning and NEPA Workshop, which provides a forum and facilitated group discussion among and between State DOT; MPO; Federal, Tribal, and State environmental, regulatory, and resource agencies; and FHWA/FTA representatives (at both the executive and program manager levels) to develop a State-specific action plan that will provide for strengthened linkages between the transportation planning and NEPA processes.

Moreover, the U.S. Fish and Wildlife Service offers Green Infrastructure Workshops that are focused on integrating planning for natural resources (''green infrastructure'') with the development, economic, and other infrastructure needs of society (''gray infrastructure'').

Robust planning and multi-issue environmental screening requires input from a wide variety of disciplines, including information technology; transportation planning; the NEPA process; and regulatory, permitting, and environmental specialty areas (e.g., noise, air quality, and biology). Senior managers at transportation and partner agencies can arrange a variety of

individual training programs to support learning curves and skill development that contribute to a strengthened link of the transportation planning and NEPA processes. Formal and informal mentoring on an intra-agency basis can be arranged. Employee exchanges within and between agencies can be periodically scheduled, and persons involved with professional leadership programs can seek temporary assignments with partner agencies.

IV. Additional Information on This Topic

Valuable sources of information are FHWA's environment Web site (*http://www.fhwa.dot.gov/environment/index.htm*) and FTA's environmental streamlining Web site (*http://www.environment.fta.dot.gov*). Another source of information and case studies is NCHRP Report 8–38 (Consideration of Environmental Factors in Transportation Systems Planning), which is available at *http://www4.trb.org/trb/crp.nsf/All+Projects/NCHRP+8-38.* In addition, AASHTO's Center for Environmental Excellence Web site is continuously updated with news and links to information of interest to transportation and environmental professionals (*www.transportation.environment.org*).

TITLE 49—TRANSPORTATION

■ 2. Revise part 613 to read as follows:

PART 613—METROPOLITAN AND STATEWIDE AND NONMETROPOLITAN PLANNING

Subpart A—Metropolitan Transportation Planning and Programming

Sec.

613.100 Metropolitan transportation planning and programming.

Subpart B—Statewide and Nonmetropolitan Transportation Planning and Programming

613.200 Statewide and Nonmetropolitan transportation planning and programming.

Authority: 23 U.S.C. 134, 135, and 217(g); 42 U.S.C. 3334, 4233, 4332, 7410 et seq.; 49 U.S.C. 5303–5306, 5323(k); and 49 CFR 1.85, 1.51(f) and 21.7(a).

Subpart A—Metropolitan Transportation Planning and Programming

§ 613.100 Metropolitan transportation planning and programming.

The regulations in 23 CFR part 450, subpart C, shall be followed in complying with the requirements of this subpart. The definitions in 23 CFR part 450, subpart A, shall apply.

Subpart B—Statewide and Nonmetropolitan Transportation Planning and Programming

§ 613.200 Statewide and Nonmetropolitan transportation planning and programming.

The regulations in 23 CFR part 450, subpart B, shall be followed in complying with the requirements of this subpart. The definitions in 23 CFR part 450, subpart A, shall apply.

[FR Doc. 2014–12155 Filed 5–30–14; 8:45 am]

BILLING CODE 4910–22–P

Reader Aids

Federal Register

Vol. 79, No. 105

Monday, June 2, 2014

CUSTOMER SERVICE AND INFORMATION

Federal Register/Code of Federal Regulations	
General Information, indexes and other finding aids	**202–741–6000**
Laws	**741–6000**
Presidential Documents	
Executive orders and proclamations	**741–6000**
The United States Government Manual	**741–6000**
Other Services	
Electronic and on-line services (voice)	**741–6020**
Privacy Act Compilation	**741–6064**
Public Laws Update Service (numbers, dates, etc.)	**741–6043**
TTY for the deaf-and-hard-of-hearing	**741–6086**

ELECTRONIC RESEARCH

World Wide Web

Full text of the daily Federal Register, CFR and other publications is located at: **www.fdsys.gov.**

Federal Register information and research tools, including Public Inspection List, indexes, and Code of Federal Regulations are located at: **www.ofr.gov.**

E-mail

FEDREGTOC-L (Federal Register Table of Contents LISTSERV) is an open e-mail service that provides subscribers with a digital form of the Federal Register Table of Contents. The digital form of the Federal Register Table of Contents includes HTML and PDF links to the full text of each document.

To join or leave, go to **http://listserv.access.gpo.gov** and select *Online mailing list archives, FEDREGTOC-L, Join or leave the list (or change settings);* then follow the instructions.

PENS (Public Law Electronic Notification Service) is an e-mail service that notifies subscribers of recently enacted laws.

To subscribe, go to **http://listserv.gsa.gov/archives/publaws-l.html** and select *Join or leave the list (or change settings);* then follow the instructions.

FEDREGTOC-L and **PENS** are mailing lists only. We cannot respond to specific inquiries.

Reference questions. Send questions and comments about the Federal Register system to: **fedreg.info@nara.gov**

The Federal Register staff cannot interpret specific documents or regulations.

Reminders. Effective January 1, 2009, the Reminders, including Rules Going Into Effect and Comments Due Next Week, no longer appear in the Reader Aids section of the Federal Register. This information can be found online at **http://www.regulations.gov.**

CFR Checklist. Effective January 1, 2009, the CFR Checklist no longer appears in the Federal Register. This information can be found online at **http://bookstore.gpo.gov/.**

FEDERAL REGISTER PAGES AND DATE, JUNE

31205–31842 2

CFR PARTS AFFECTED DURING JUNE

At the end of each month the Office of the Federal Register publishes separately a List of CFR Sections Affected (LSA), which lists parts and sections affected by documents published since the revision date of each title.

LIST OF PUBLIC LAWS

Note: No public bills which have become law were received by the Office of the Federal Register for inclusion in today's **List of Public Laws**.

Last List May 29, 2014

Public Laws Electronic Notification Service (PENS)

PENS is a free electronic mail notification service of newly enacted public laws. To subscribe, go to *http://listserv.gsa.gov/archives/publaws-l.html*

Note: This service is strictly for E-mail notification of new laws. The text of laws is not available through this service. **PENS** cannot respond to specific inquiries sent to this address.

TABLE OF EFFECTIVE DATES AND TIME PERIODS—JUNE 2014

This table is used by the Office of the Federal Register to compute certain dates, such as effective dates and comment deadlines, which appear in agency documents. In computing these dates, the day after publication is counted as the first day.

When a date falls on a weekend or holiday, the next Federal business day is used. (See 1 CFR 18.17)

A new table will be published in the first issue of each month.

Date of FR publication	15 days after publication	21 days after publication	30 days after publication	35 days after publication	45 days after publication	60 days after publication	90 days after publication
June 2	Jun 17	Jun 23	Jul 2	Jul 7	Jul 17	Aug 1	Sep 2
June 3	Jun 18	Jun 24	Jul 3	Jul 8	Jul 18	Aug 4	Sep 2
June 4	Jun 19	Jun 25	Jul 7	Jul 9	Jul 21	Aug 4	Sep 2
June 5	Jun 20	Jun 26	Jul 7	Jul 10	Jul 21	Aug 4	Sep 3
June 6	Jun 23	Jun 27	Jul 7	Jul 11	Jul 21	Aug 5	Sep 4
June 9	Jun 24	Jun 30	Jul 9	Jul 14	Jul 24	Aug 8	Sep 8
June 10	Jun 25	Jul 1	Jul 10	Jul 15	Jul 25	Aug 11	Sep 8
June 11	Jun 26	Jul 2	Jul 11	Jul 16	Jul 28	Aug 11	Sep 9
June 12	Jun 27	Jul 3	Jul 14	Jul 17	Jul 28	Aug 11	Sep 10
June 13	Jun 30	Jul 7	Jul 14	Jul 18	Jul 28	Aug 12	Sep 11
June 16	Jul 1	Jul 7	Jul 16	Jul 21	Jul 31	Aug 15	Sep 15
June 17	Jul 2	Jul 8	Jul 17	Jul 22	Aug 1	Aug 18	Sep 15
June 18	Jul 3	Jul 9	Jul 18	Jul 23	Aug 4	Aug 18	Sep 16
June 19	Jul 7	Jul 10	Jul 21	Jul 24	Aug 4	Aug 18	Sep 17
June 20	Jul 7	Jul 11	Jul 21	Jul 25	Aug 4	Aug 19	Sep 18
June 23	Jul 8	Jul 14	Jul 23	Jul 28	Aug 7	Aug 22	Sep 22
June 24	Jul 9	Jul 15	Jul 24	Jul 29	Aug 8	Aug 25	Sep 22
June 25	Jul 10	Jul 16	Jul 25	Jul 30	Aug 11	Aug 25	Sep 23
June 26	Jul 11	Jul 17	Jul 28	Jul 31	Aug 11	Aug 25	Sep 24
June 27	Jul 14	Jul 18	Jul 28	Aug 1	Aug 11	Aug 26	Sep 25
June 30	Jul 15	Jul 21	Jul 30	Aug 4	Aug 14	Aug 29	Sep 29