AUTHENTICATED
U.S. GOVERNMENT
INFORMATION
GPO

FEDERAL REGISTER

Vol. 79 Monday,
No. 66 April 7, 2014

Pages 18985–19286

OFFICE OF THE FEDERAL REGISTER

The **FEDERAL REGISTER** (ISSN 0097–6326) is published daily, Monday through Friday, except official holidays, by the Office of the Federal Register, National Archives and Records Administration, Washington, DC 20408, under the Federal Register Act (44 U.S.C. Ch. 15) and the regulations of the Administrative Committee of the Federal Register (1 CFR Ch. I). The Superintendent of Documents, U.S. Government Printing Office, Washington, DC 20402 is the exclusive distributor of the official edition. Periodicals postage is paid at Washington, DC.

The **FEDERAL REGISTER** provides a uniform system for making available to the public regulations and legal notices issued by Federal agencies. These include Presidential proclamations and Executive Orders, Federal agency documents having general applicability and legal effect, documents required to be published by act of Congress, and other Federal agency documents of public interest.

Documents are on file for public inspection in the Office of the Federal Register the day before they are published, unless the issuing agency requests earlier filing. For a list of documents currently on file for public inspection, see *www.ofr.gov.*

The seal of the National Archives and Records Administration authenticates the Federal Register as the official serial publication established under the Federal Register Act. Under 44 U.S.C. 1507, the contents of the **Federal Register** shall be judicially noticed.

The **Federal Register** is published in paper and on 24x microfiche. It is also available online at no charge at *www.fdsys.gov*, a service of the U.S. Government Printing Office.

The online edition of the **Federal Register** is issued under the authority of the Administrative Committee of the Federal Register as the official legal equivalent of the paper and microfiche editions (44 U.S.C. 4101 and 1 CFR 5.10). It is updated by 6:00 a.m. each day the **Federal Register** is published and includes both text and graphics from Volume 59, 1 (January 2, 1994) forward. For more information, contact the GPO Customer Contact Center, U.S. Government Printing Office. Phone 202-512-1800 or 866-512-1800 (toll free). E-mail, *gpocusthelp.com.*

The annual subscription price for the **Federal Register** paper edition is $749 plus postage, or $808, plus postage, for a combined **Federal Register, Federal Register** Index and List of CFR Sections Affected (LSA) subscription; the microfiche edition of the **Federal Register** including the **Federal Register** Index and LSA is $165, plus postage. Six month subscriptions are available for one-half the annual rate. The prevailing postal rates will be applied to orders according to the delivery method requested. The price of a single copy of the daily **Federal Register,** including postage, is based on the number of pages: $11 for an issue containing less than 200 pages; $22 for an issue containing 200 to 400 pages; and $33 for an issue containing more than 400 pages. Single issues of the microfiche edition may be purchased for $3 per copy, including postage. Remit check or money order, made payable to the Superintendent of Documents, or charge to your GPO Deposit Account, VISA, MasterCard, American Express, or Discover. Mail to: U.S. Government Printing Office—New Orders, P.O. Box 979050, St. Louis, MO 63197-9000; or call toll free 1-866-512-1800, DC area 202-512-1800; or go to the U.S. Government Online Bookstore site, see *bookstore.gpo.gov.*

There are no restrictions on the republication of material appearing in the **Federal Register.**

How To Cite This Publication: Use the volume number and the page number. Example: 77 FR 12345.

Postmaster: Send address changes to the Superintendent of Documents, Federal Register, U.S. Government Printing Office, Washington, DC 20402, along with the entire mailing label from the last issue received.

SUBSCRIPTIONS AND COPIES

PUBLIC	
Subscriptions:	
Paper or fiche	**202–512–1800**
Assistance with public subscriptions	**202–512–1806**
General online information	**202–512–1530; 1–888–293–6498**
Single copies/back copies:	
Paper or fiche	**202–512–1800**
Assistance with public single copies	**1–866–512–1800 (Toll-Free)**
FEDERAL AGENCIES	
Subscriptions:	
Paper or fiche	**202–741–6005**
Assistance with Federal agency subscriptions	**202–741–6005**

Printed on recycled paper.

Contents

Federal Register

Vol. 79, No. 66

Monday, April 7, 2014

Agricultural Marketing Service
RULES
Christmas Tree Promotion, Research, and Information Order:
Lifting of the Stay, 18987
PROPOSED RULES
Assessment Requirements:
Domestic Dates Produced or Packed in Riverside County, CA; Revisions, 19028–19030
NOTICES
Agency Information Collection Activities; Proposals, Submissions, and Approvals:
Christmas Tree Promotion, Research, and Information Order, 19045–19046
Meetings:
Plant Variety Protection Board, 19046–19047

Agriculture Department
See Agricultural Marketing Service
See Federal Crop Insurance Corporation
See Rural Housing Service
NOTICES
Agency Information Collection Activities; Proposals, Submissions, and Approvals; Correction, 19045

Broadcasting Board of Governors
NOTICES
Meetings; Sunshine Act, 19050

Bureau of Safety and Environmental Enforcement
NOTICES
Agency Information Collection Activities; Proposals, Submissions, and Approvals:
Platforms and Structures, 19112–19117

Centers for Disease Control and Prevention
NOTICES
Agency Information Collection Activities; Proposals, Submissions, and Approvals, 19086–19088

Children and Families Administration
NOTICES
Agency Information Collection Activities; Proposals, Submissions, and Approvals, 19088–19089
Agency Information Collection Activities; Proposals, Submissions, and Approvals:
Permanency Innovations Initiative Evaluation: Phase 3, 19090–19091
Rescue and Restore Regional Program Project Data, 19089–19090

Civil Rights Commission
NOTICES
Meetings:
South Carolina Advisory Committee, 19050–19051
Tennessee Advisory Committee, 19050

Coast Guard
RULES
Drawbridge Operations:
Willamette River, Portland, OR, 18996–18997
Special Local Regulations:
Annual Marine Events on the Colorado River, between Davis Dam and Headgate Dam, within the San Diego Captain of the Port Zone, 18995–18996
PROPOSED RULES
Safety Zones:
Atlantic Ocean, Virginia Beach, VA, 19031–19036
NOTICES
Agency Information Collection Activities; Proposals, Submissions, and Approvals, 19105–19107
Interim Guidance for Nontank Vessel Response Plans; Cancellation, 19107
Meetings:
Lower Mississippi River Waterway Safety Advisory Committee, 19107–19108

Commerce Department
See Foreign-Trade Zones Board
See Industry and Security Bureau
See International Trade Administration
See National Oceanic and Atmospheric Administration

Defense Department
NOTICES
Agency Information Collection Activities; Proposals, Submissions, and Approvals:
Federal Acquisition Regulation; Architect-Engineer Qualifications, 19085

Education Department
NOTICES
Agency Information Collection Activities; Proposals, Submissions, and Approvals:
Promoting Postbaccalaureate Opportunities for Hispanic Americans, 19061–19062
Study of Enhanced College Advising in Upward Bound, 19061

Energy Department
See Federal Energy Regulatory Commission
See Western Area Power Administration
NOTICES
Meetings:
Environmental Management Site-Specific Advisory Board Chairs, 19062

Environmental Protection Agency
RULES
Air Quality State Implementation Plans; Approvals and Promulgations:
Hawaii; Infrastructure Requirements for the 2008 Lead National Ambient Air Quality Standard, 19012–19014
Illinois; 10-Year FESOP Amendments, 18997–18999
Indiana; Ohio; Infrastructure SIP State Board Requirements for the 2006 24-Hour PM2.5 NAAQS, 18999–19001
Pennsylvania; Infrastructure Requirements for the 2008 Lead National Ambient Air Quality Standards, 19009–19012
West Virginia; Section 110(a)(2) Infrastructure Requirements for the 2008 Ozone National Ambient Air Quality Standards, 19001–19009

PROPOSED RULES
Acquisition Regulations:
Clause for Ordering by Designated Ordering Officers, 19039–19042
Air Quality State Implementation Plans; Approvals and Promulgations:
Illinois; 10-Year FESOP Amendments, 19036–19037
National Oil and Hazardous Substances Pollution Contingency Plan:
National Priorities List; Harbor Oil Superfund Site; Deletion, 19037–19039
NOTICES
Guidance for Industry:
Protection of Stratospheric Ozone; Data Availability Regarding Aggregate, 19077–19079

Executive Office of the President
See Presidential Documents

Export-Import Bank
NOTICES
Agency Information Collection Activities; Proposals, Submissions, and Approvals, 19079–19080
Agency Information Collection Activities; Proposals, Submissions, and Approvals:
EIB 10–04 Notice of Claim and Proof of Loss, Working Capital Guarantee, 19080–19081
EIB 10–05 Notice of Claim and Proof of Loss, Medium Term Guarantee, 19080

Federal Aviation Administration
RULES
Airworthiness Directives:
Fokker Services B.V. Airplanes, 18987–18990
PROPOSED RULES
Amendment of Class E Airspace:
Taylor, TX, 19030–19031

Federal Communications Commission
RULES
Television Broadcasting Services:
South Bend, IN, 19014–19015
NOTICES
Agency Information Collection Activities; Proposals, Submissions, and Approvals, 19081–19084

Federal Crop Insurance Corporation
NOTICES
Agency Information Collection Activities; Proposals, Submissions, and Approvals, 19047–19049

Federal Energy Regulatory Commission
NOTICES
Hydroelectric Applications:
Pepperell Hydro Company, LLC, 19063–19064
Permit Applications:
ORPC Alaska 2, LLC, 19065
Pennamaquan Tidal Power, LLC, 19064–19065

Federal Motor Carrier Safety Administration
NOTICES
Agency Information Collection Activities; Proposals, Submissions, and Approvals:
Hazardous Materials Safety Permits, 19169–19170
Qualification of Drivers; Exemption Applications:
Commonwealth of Virginia, Department of Motor Vehicles, 19170–19171

Federal Reserve System
NOTICES
Changes in Bank Control:
Acquisitions of Shares of a Bank or Bank Holding Company, 19084

Fish and Wildlife Service
NOTICES
Endangered and Threatened Wildlife and Plants:
Incidental Take Permit Application, Low-Effect Habitat Conservation Plan, etc., San Bernardino County, CA, 19117–19118
Endangered and Threatened Wildlife and Plants; Incidental Take Permit Applications:
Low-Effect Habitat Conservation Plan, Preble's Meadow Jumping Mouse, Kettle Creek Ranch in El Paso County, CO, 19118–19120

Food and Drug Administration
RULES
Zoetis Inc., et al.; Withdrawal of Approval of New Animal Drug Applications for Combination Drug Medicated Feeds Containing an Arsenical Drug; Correction, 18990
NOTICES
Agency Information Collection Activities; Proposals, Submissions, and Approvals:
Adverse Experience Reporting for Licensed Biological Products; and General Records, 19097–19099
Current Good Manufacturing Practice Regulations for Medicated Feeds, 19091–19093
Current Good Manufacturing Practice Regulations for Type A Medicated Articles, 19093–19094
Data to Support Drug Product Communications as Used by the Food and Drug Administration, 19096–19097
Guidance for Industry on Updating Labeling for Susceptibility Test Information in Systemic Antibacterial Drug Products, etc., 19099–19100
Index of Legally Marketed Unapproved New Animal Drugs for Minor Species, 19094–19096
Availability:
Risk-Based Regulatory Framework and Strategy for Health Information Technology Report; Report and Web Site Location, 19100–19101
Products Not Withdrawn from Sale for Reasons of Safety or Effectiveness:
SKELAXIN (Metaxalone) Tablets, 400 Milligrams, 19102
Regulatory Review Period for Patent Extensions:
MELAFIND SYSTEM, 19101–19102

Foreign Assets Control Office
RULES
Iranian Transactions and Sanctions, 18990–18995

Foreign-Trade Zones Board
NOTICES
Subzone Applications:
Neolpharma, Inc., Foreign-Trade Zone 7, Mayaguez, PR, 19051

General Services Administration
NOTICES
Agency Information Collection Activities; Proposals, Submissions, and Approvals:
Federal Acquisition Regulation; Architect-Engineer Qualifications, 19085
Meetings:
President's Management Advisory Board, 19085–19086

Health and Human Services Department
See Centers for Disease Control and Prevention
See Children and Families Administration
See Food and Drug Administration
See National Institutes of Health

Homeland Security Department
See Coast Guard

Housing and Urban Development Department
NOTICES
Agency Information Collection Activities; Proposals, Submissions, and Approvals:
Owner's Certification with HUD Tenant Eligibility and Rent Procedures, 19108–19112

Industry and Security Bureau
NOTICES
Meetings:
Information Systems Technical Advisory Committee, 19051–19052
Sensors and Instrumentation Technical Advisory Committee, 19051
Transportation and Related Equipment Technical Advisory Committee, 19052

Interior Department
See Bureau of Safety and Environmental Enforcement
See Fish and Wildlife Service
See National Park Service

Internal Revenue Service
NOTICES
Agency Information Collection Activities; Proposals, Submissions, and Approvals:
Form 1065, 1065–X and Schedules, 19173–19174
Form 1099–LTC, 19173
Revenue Procedure 2005–24/Notice 2006–15, 19174–19175

International Trade Administration
NOTICES
Antidumping Duty Administrative Reviews; Results, Extensions, Amendments, etc.:
Certain Frozen Fish Fillets from the Socialist Republic of Vietnam; New Shipper Review, 19053–19056
Circular Welded Carbon-Quality Steel Line Pipe from the People's Republic of China; Sunset Review, 19052–19053
Countervailing Duty Investigations; Results, Extensions, Amendments, etc.:
Monosodium Glutamate from the People's Republic of China and the Republic of Indonesia, 19056–19057
Scope Rulings, 19057–19058

International Trade Commission
NOTICES
Investigations; Terminations, Modifications and Rulings, etc.:
Certain Oil Country Tubular Goods from India, Korea, Philippines, Saudi Arabia, Taiwan, Thailand, Turkey, Ukraine, and Vietnam, 19122–19124
Hemostatic Products, 19124–19125

Labor Department
See Occupational Safety and Health Administration

Maritime Administration
NOTICES
Ex-USNS COMET Available for Donation, 19171–19172

National Aeronautics and Space Administration
NOTICES
Agency Information Collection Activities; Proposals, Submissions, and Approvals:
Federal Acquisition Regulation; Architect-Engineer Qualifications, 19085

National Endowment for the Arts
NOTICES
Agency Information Collection Activities; Proposals, Submissions, and Approvals, 19127

National Foundation on the Arts and the Humanities
See National Endowment for the Arts

National Highway Traffic Safety Administration
RULES
Federal Motor Vehicle Safety Standards; Rear Visibility, 19178–19250

National Institutes of Health
NOTICES
Meetings:
Center for Scientific Review, 19103
National Heart, Lung, and Blood Institute, 19104
National Institute of Allergy and Infectious Diseases, 19104–19105
National Institute of Diabetes and Digestive and Kidney Diseases, 19103, 19105
National Institute of Neurological Disorders and Stroke, 19103–19104
National Institute on Aging, 19102–19103

National Oceanic and Atmospheric Administration
RULES
Atlantic Coastal Fisheries:
Cooperative Management Act Provisions; American Lobster Fishery, 19015–19027
NOTICES
Domestic Fisheries:
Exempted Fishing Permit Applications, 19058–19059
Meetings:
Fisheries of the Gulf of Mexico and South Atlantic; Southeast Data, Assessment, and Review, 19060
Gulf of Mexico Fishery Management Council, 19059–19060
Mid-Atlantic Fishery Management Council, 19060–19061
Takes of Marine Mammals Incidental to Specified Activities:
Taking Marine Mammals Incidental to Buccaneer Energy Drilling Activities in Upper Cook Inlet, 2014, 19252–19280

National Park Service
NOTICES
Changes of Jurisdiction:
National Park Service Units within the State of South Carolina, 19120
Meetings:
Captain John Smith Chesapeake National Historic Trail Advisory Council, 19121–19122
Landmarks Committee of the National Park System Advisory Board, 19120–19121
National Register of Historic Places:
Pending Nominations and Related Actions, 19122

National Science Foundation
NOTICES
Permit Emergency Provision under the Antarctic Conservation Act of 1978, 19127

Nuclear Regulatory Commission
NOTICES
Meetings; Sunshine Act, 19127–19128

Occupational Safety and Health Administration
NOTICES
Agency Information Collection Activities; Proposals, Submissions, and Approvals:
Underground Construction Standard, 19125–19127

Presidential Documents
PROCLAMATIONS
Special Observances:
World Autism Awareness Day (Proc. 9098), 18985–18986
EXECUTIVE ORDERS
South Sudan; Blocking Property of Certain Persons (EO 13664), 19281–19285

Rural Housing Service
NOTICES
Meetings:
Section 538 Guaranteed Rural Rental Housing Program 2014 Industry Forums; Teleconferences and/or Web Conferences, 19049–19050

Securities and Exchange Commission
NOTICES
Agency Information Collection Activities; Proposals, Submissions, and Approvals:
Electronic Data Collection System, 19129
Rule 15c2–11, 19128–19129
Meetings; Sunshine Act, 19129
Self-Regulatory Organizations; Proposed Rule Changes:
Chicago Board Options Exchange, Inc, 19139–19141
Chicago Mercantile Exchange Inc., 19145–19146, 19158–19159
NASDAQ OMX BX, Inc., 19129–19131
New York Stock Exchange LLC, 19146–19154
NYSE Arca, Inc., 19143–19145, 19154–19158
NYSE MKT LLC, 19131–19139, 19160–19165
The Options Clearing Corp, 19141–19143

Small Business Administration
NOTICES
Conflict of Interest Exemptions:
Diamond State Ventures III, LP, 19166
Eagle Fund III –A, L.P., 19165–19166

State Department
NOTICES
Bureau of Oceans and International Environmental and Scientific Affairs, 19166
Delegation of Authority of the Securities Exchange Act, 19167
Report to Congress Pursuant to Section 1245(e) of the National Defense Authorization Act for Fiscal Year 2013, 19167

Surface Transportation Board
PROPOSED RULES
Railroad Revenue Adequacy:
Petition to Abolish Use of Multi-Stage Discounted Cash Flow Model in Determining Railroad Industry Cost of Equity Capital; Hearing, 19042–19044
NOTICES
Abandonment Exemptions:
Norfolk Southern Railway Co., Prince Edward County, VA, 19172–19173

Transportation Department
See Federal Aviation Administration
See Federal Motor Carrier Safety Administration
See Maritime Administration
See National Highway Traffic Safety Administration
See Surface Transportation Board
NOTICES
Requirements for the Secretary of Transportations Recognizing Aviation and Aerospace Innovation in Science and Engineering Awards, 19167–19169

Treasury Department
See Foreign Assets Control Office
See Internal Revenue Service

Veterans Affairs Department
NOTICES
Agency Information Collection Activities; Proposals, Submissions, and Approvals:
Servicemember Group Life Insurance Disability Extension Application, 19175
Veterans Transportation Service Data Collection, 19175–19176
Meetings:
Veterans' Advisory Committee on Rehabilitation, 19176

Western Area Power Administration
NOTICES
Transmission Infrastructure Program, 19065–19077

Separate Parts In This Issue

Part II
Transportation Department, National Highway Traffic Safety Administration, 19178–19250

Part III
Commerce Department, National Oceanic and Atmospheric Administration, 19252–19280

Part IV
Presidential Documents, 19281–19285

Reader Aids

Consult the Reader Aids section at the end of this page for phone numbers, online resources, finding aids, reminders, and notice of recently enacted public laws.

To subscribe to the Federal Register Table of Contents LISTSERV electronic mailing list, go to http://listserv.access.gpo.gov and select Online mailing list archives, FEDREGTOC-L, Join or leave the list (or change settings); then follow the instructions.

CFR PARTS AFFECTED IN THIS ISSUE

A cumulative list of the parts affected this month can be found in the Reader Aids section at the end of this issue.

3 CFR

Proclamations:

9098 18985

Executive Orders:

13664 19283

7 CFR

1214 18987

Proposed Rules:

987 19028

14 CFR

39 18987

Proposed Rules:

71 19030

21 CFR

556 18990

558 18990

31 CFR

560 18990

33 CFR

100 18995

117 (2 documents) 18996

Proposed Rules:

165 (2 documents) 19031, 19034

40 CFR

52 (5 documents) 18997, 18999, 19001, 19009, 19012

Proposed Rules:

52 19036

300 19037

47 CFR

73 19014

48 CFR

Proposed Rules:

1516 19039

1552 19039

49 CFR

571 19178

Proposed Rules:

Ch. X 19042

50 CFR

697 19015

Federal Register
Vol. 79, No. 66
Monday, April 7, 2014

Presidential Documents

Title 3—

The President

Proclamation 9098 of April 1, 2014

World Autism Awareness Day, 2014

By the President of the United States of America

A Proclamation

Each year, people across the globe take time to recognize the millions of people living on the autism spectrum, including 1 out of every 68 American children. Americans with autism contribute to all aspects of society and are an essential thread in the diverse tapestry of our Nation. On World Autism Awareness Day, we offer our support and respect to all those on the autism spectrum.

Because our whole Nation benefits when Americans with autism succeed, we must ensure our health care and education systems work for them. Thanks to the Affordable Care Act, insurers can no longer deny coverage to people because they have autism, and new plans must cover preventive services—including autism and developmental screenings—at no out-of-pocket cost to parents. My Administration remains committed to eliminating discrimination against students with autism and to giving schools the resources to help them hone unique talents, overcome difficult challenges, and prepare for bright futures.

We must also do more to improve our understanding of the autism spectrum, which is why I was proud to sign legislation that continued critical investments in research, early detection, and support services for children and adults with autism. Last year, I launched the Brain Research through Advancing Innovative Neurotechnologies (BRAIN) Initiative, a program that aims to revolutionize our understanding of the human mind. By unlocking new knowledge of the brain, we can pave the way for myriad medical breakthroughs, including a greater appreciation for the science of autism.

What makes America exceptional are the bonds that hold together the most diverse Nation on earth. Today, let us celebrate our differences—but let us also acknowledge our responsibilities to each other and move forward as one.

NOW, THEREFORE, I, BARACK OBAMA, President of the United States of America, by virtue of the authority vested in me by the Constitution and the laws of the United States, do hereby proclaim April 2, 2014, World Autism Awareness Day. I encourage all Americans to learn more about autism and what they can do to support individuals on the autism spectrum and their families.

IN WITNESS WHEREOF, I have hereunto set my hand this first day of April, in the year of our Lord two thousand fourteen, and of the Independence of the United States of America the two hundred and thirty-eighth.

[FR Doc. 2014–07816
Filed 4–4–14; 8:45 am]
Billing code 3295–F4

Rules and Regulations

Federal Register
Vol. 79, No. 66
Monday, April 7, 2014

This section of the FEDERAL REGISTER contains regulatory documents having general applicability and legal effect, most of which are keyed to and codified in the Code of Federal Regulations, which is published under 50 titles pursuant to 44 U.S.C. 1510.

The Code of Federal Regulations is sold by the Superintendent of Documents. Prices of new books are listed in the first FEDERAL REGISTER issue of each week.

DEPARTMENT OF AGRICULTURE

Agricultural Marketing Service

7 CFR Part 1214

[Document No. AMS–FV–10–0008–FR–1A]

RIN 0581–AD00

Christmas Tree Promotion, Research, and Information Order; Lifting of the Stay of Regulation

AGENCY: Agricultural Marketing Service, USDA.

ACTION: Final rule; lifting stay of regulations.

SUMMARY: On November 8, 2011, a final rule was published in the **Federal Register** (76 FR 69094) establishing an industry-funded promotion, research, and information program for fresh cut Christmas trees. The effective date of the final rule was November 9, 2011. On November 17, 2011, the Christmas Tree Promotion Research and Information Order (Order) date was stayed to provide all interested persons, including the Christmas tree industry and the general public, an opportunity to become more familiar with the program. The stay is being lifted in accordance with the provisions of the Agricultural Act of 2014.

DATES: The removal of the stay of subpart A of 7 CFR part 1214 will become effective April 8, 2014.

FOR FURTHER INFORMATION CONTACT: Patricia A. Petrella, Marketing Specialist, Promotion and Economics Division, Fruit and Vegetable Programs, AMS, USDA, 1400 Independence Avenue SW., Room 1406, Stop 0244, Washington, DC 20250–0244; telephone: (301) 334–2891; or facsimile: (301) 334–2896; or email: *Patricia.Petrella@ams.usda.gov.*

SUPPLEMENTARY INFORMATION: The Department of Agriculture (Department) published in the **Federal Register** on November 8, 2011, (76 FR 69094) a final rule that established a Christmas Tree Promotion, Research, and Information Order (Order). This Order was issued pursuant to the Commodity Promotion, Research, and Information Act of 1996 (7 U.S.C. 7411–7425). A stay of the regulation was issued on November 17, 2011 (76 FR 71241) to provide additional time for the Department to reach out to the Christmas Tree industry and the public to explain how a research and promotion program is a producer driven program to support American farmers. The Department did provide additional information to interested parties including the Christmas tree industry, the media, and the public, to explain how the program works and the overall benefits of research and promotion programs. Industry stakeholders also conducted outreach among the industry and other interested persons.

The stay is being lifted in accordance with the provisions of the Agricultural Act of 2014. Section 10014 states that not later than 60 days after the date of the enactment of this Act, the Secretary of Agriculture shall lift the administrative stay imposed and published by the Department on November 17, 2011.

Accordingly, the stay is lifted to allow the program to become effective.

Authority: 7 U.S.C. 7411–7425 and 7401.

Dated: April 2, 2014.

Rex A. Barnes,

Associate Administrator.

[FR Doc. 2014–07684 Filed 4–4–14; 8:45 am]

BILLING CODE 3410–02–P

DEPARTMENT OF TRANSPORTATION

Federal Aviation Administration

14 CFR Part 39

[Docket No. FAA–2013–0674; Directorate Identifier 2012–NM–217–AD; Amendment 39–17817; AD 2014–07–03]

RIN 2120–AA64

Airworthiness Directives; Fokker Services B.V. Airplanes

AGENCY: Federal Aviation Administration (FAA), Department of Transportation (DOT).

ACTION: Final rule.

SUMMARY: We are adopting a new airworthiness directive (AD) for all Fokker Services B.V. Model F.28 Mark 0070 and 0100 airplanes. This AD was prompted by a design review, which revealed that no controlled bonding provisions are present on a number of critical locations inside the fuel tank or connected to the fuel tank wall. This AD requires installing additional bonding provisions in the fuel tank, and revising the airplane maintenance or inspection program by incorporating fuel airworthiness limitation items and critical design configuration control limitations. We are issuing this AD to prevent an ignition source in the fuel tank vapor space, which could result in a fuel tank explosion and consequent loss of the airplane.

DATES: This AD becomes effective May 12, 2014.

The Director of the Federal Register approved the incorporation by reference of a certain publication listed in this AD as of May 12, 2014.

ADDRESSES: You may examine the AD docket on the Internet at *http://www.regulations.gov/#!docketDetail;D=FAA-2013-0674;* or in person at the Docket Management Facility, U.S. Department of Transportation, Docket Operations, M–30, West Building Ground Floor, Room W12–140, 1200 New Jersey Avenue SE., Washington, DC.

For service information identified in this AD, contact Fokker Services B.V., Technical Services Dept., P.O. Box 1357, 2130 EL Hoofddorp, the Netherlands; telephone +31 (0)88–6280–350; fax +31 (0)88–6280–111; email *technicalservices@fokker.com;* Internet *http://www.myfokkerfleet.com.* You may view this referenced service information at the FAA, Transport Airplane Directorate, 1601 Lind Avenue SW., Renton, WA. For information on the availability of this material at the FAA, call 425–227–1221.

FOR FURTHER INFORMATION CONTACT: Tom Rodriguez, Aerospace Engineer, International Branch, ANM–116, Transport Airplane Directorate, FAA, 1601 Lind Avenue SW., Renton, WA 98057–3356; telephone 425–227–1137; fax 425–227–1149.

SUPPLEMENTARY INFORMATION:

Discussion

We issued a notice of proposed rulemaking (NPRM) to amend 14 CFR

part 39 by adding an AD that would apply to all Fokker Services B.V. Model F.28 Mark 0070 and 0100 airplanes. The NPRM published in the **Federal Register** on August 12, 2013 (78 FR 48832). The NPRM was prompted by a design review, which revealed that no controlled bonding provisions are present on a number of critical locations inside the fuel tank or connected to the fuel tank wall. The NPRM proposed to require installing additional bonding provisions in the fuel tank, and revising the airplane maintenance or inspection program by incorporating fuel airworthiness limitation items and critical design configuration control limitations. We are issuing this AD to prevent an ignition source in the fuel tank vapor space, which could result in a fuel tank explosion and consequent loss of the airplane.

The European Aviation Safety Agency (EASA), which is the Technical Agent for the Member States of the European Community, has issued EASA Airworthiness Directive 2012–0242, dated November 12, 2012 (referred to after this as the Mandatory Continuing Airworthiness Information, or ''the MCAI''), to correct an unsafe condition for the specified products. The MCAI states:

Prompted by an accident * * *, the FAA published Special Federal Aviation Regulation (SFAR) 88 [(66 FR 23086, May 7, 2001)], and the Joint Aviation Authorities (JAA) published Interim Policy INT/POL/25/12.

The design review conducted by Fokker Services on the Fokker 70 and Fokker 100 in response to these regulations revealed that no controlled bonding provisions are present on a number of critical locations, inside the fuel tank or connected to the fuel tank wall.

This condition, if not corrected, may create an ignition source in the fuel tank vapour space, possibly resulting in a fuel tank explosion and consequent loss of the aeroplane.

For the reasons described above, this [EASA] AD requires the installation of additional bonding provisions and, subsequently, the implementation of the associated Fuel Airworthiness Limitation Items (ALI) and Critical Design Configuration Control Limitations (CDCCL[s]) [and revising the maintenance program to incorporate the ALIs and CDCCLs].

You may examine the MCAI in the AD docket on the Internet at *http://www.regulations.gov/#!documentDetail;D=FAA-2013-0674-0002.*

Comments

We gave the public the opportunity to participate in developing this AD. We received no comments on the NPRM (78 FR 48832, August 12, 2013) or on the determination of the cost to the public.

Explanation of Change Made to This AD

There was an error in the Fokker drawing number referenced in paragraphs (g)(1)(ix) and (g)(2)(ix) of the NPRM (78 FR 48832, August 12, 2013). The Fokker drawing number referenced in the NPRM was W692710, but should have been W69710. That error has been corrected in paragraphs (g)(1)(ix) and (g)(2)(ix) of this final rule.

Conclusion

We reviewed the available data and determined that air safety and the public interest require adopting this AD with the change described previously and minor editorial changes. We have determined that these minor changes:

- Are consistent with the intent that was proposed in the NPRM (78 FR 48832, August 12, 2013) for correcting the unsafe condition; and
- Do not add any additional burden upon the public than was already proposed in the NPRM (78 FR 48832, August 12, 2013).

Costs of Compliance

We estimate that this AD affects 10 airplanes of U.S. registry.

We estimate the following costs to comply with this AD:

ESTIMATED COSTS

Action	Labor cost	Parts cost	Cost per product	Cost on U.S. operators
Installation of bonding provisions and maintenance program revision.	36 work-hours × $85 per hour = $3,060	$0	$3,060	$30,600

Authority for This Rulemaking

Title 49 of the United States Code specifies the FAA's authority to issue rules on aviation safety. Subtitle I, section 106, describes the authority of the FAA Administrator. ''Subtitle VII: Aviation Programs,'' describes in more detail the scope of the Agency's authority.

We are issuing this rulemaking under the authority described in ''Subtitle VII, Part A, Subpart III, Section 44701: General requirements.'' Under that section, Congress charges the FAA with promoting safe flight of civil aircraft in air commerce by prescribing regulations for practices, methods, and procedures the Administrator finds necessary for safety in air commerce. This regulation is within the scope of that authority because it addresses an unsafe condition that is likely to exist or develop on products identified in this rulemaking action.

Regulatory Findings

We determined that this AD will not have federalism implications under Executive Order 13132. This AD will not have a substantial direct effect on the States, on the relationship between the national government and the States, or on the distribution of power and responsibilities among the various levels of government.

For the reasons discussed above, I certify that this AD:

1. Is not a ''significant regulatory action'' under Executive Order 12866;
2. Is not a ''significant rule'' under the DOT Regulatory Policies and Procedures (44 FR 11034, February 26, 1979);
3. Will not affect intrastate aviation in Alaska; and
4. Will not have a significant economic impact, positive or negative, on a substantial number of small entities under the criteria of the Regulatory Flexibility Act.

Examining the AD Docket

You may examine the AD docket on the Internet at *http://www.regulations.gov/#!docketDetail;D=FAA-2013-0674;* or in person at the Docket Operations office between 9 a.m. and 5 p.m., Monday through Friday, except Federal holidays. The AD docket contains this AD, the regulatory evaluation, any comments received, and other information. The street address for the Docket Operations office (telephone (800) 647–5527) is in the **ADDRESSES** section.

List of Subjects in 14 CFR Part 39

Air transportation, Aircraft, Aviation safety, Incorporation by reference, Safety.

Adoption of the Amendment

Accordingly, under the authority delegated to me by the Administrator, the FAA amends 14 CFR part 39 as follows:

PART 39—AIRWORTHINESS DIRECTIVES

■ 1. The authority citation for part 39 continues to read as follows:

Authority: 49 U.S.C. 106(g), 40113, 44701.

§ 39.13 [Amended]

■ 2. The FAA amends § 39.13 by adding the following new AD:

2014–07–03 Fokker Services B.V.: Amendment 39–17817. Docket No. FAA–2013–0674; Directorate Identifier 2012–NM–217–AD.

(a) Effective Date

This airworthiness directive (AD) becomes effective May 12, 2014.

(b) Affected ADs

None.

(c) Applicability

This AD applies to Fokker Services B.V. Model F.28 Mark 0070 and 0100 airplanes, certificated in any category, all serial numbers.

(d) Subject

Air Transport Association (ATA) of America Code 28, Fuel.

(e) Reason

This AD was prompted by a design review, which revealed that no controlled bonding provisions are present on a number of critical locations inside the fuel tank or connected to the fuel tank wall. We are issuing this AD to prevent an ignition source in the fuel tank vapor space, which could result in a fuel tank explosion and consequent loss of the airplane.

(f) Compliance

You are responsible for having the actions required by this AD performed within the compliance times specified, unless the actions have already been done.

(g) Installation of Bonding Provisions

(1) Within 24 months after the effective date of this AD: Install the additional bonding provisions at the locations specified in, and in accordance with, Parts 3, 4, 5, and 6 of the Accomplishment Instructions of Fokker Service Bulletin SBF100–28–069, dated August 17, 2012, which includes the attachments identified in paragraphs (g)(1)(i) through (g)(1)(ix) of this AD.

(i) Fokker Drawing W31036, Sheet 001, Issue A, dated November 12, 2012.

(ii) Fokker Drawing W69280, Sheet 001, Issue A, dated November 12, 2009.

(iii) Fokker Drawing W69350, Sheet 001, Issue A, dated November 12, 2009.

(iv) Fokker Drawing W69285, Sheet 001, Issue A, dated November 12, 2009.

(v) Fokker Drawing W69200, Sheet 001, Issue A, and Sheets 002 through 004, Issue B, all dated November 12, 2009.

(vi) Fokker Drawing W69240, Sheet 001, Issue A, and Sheets 002 through 004, Issue B, all dated November 12, 2009.

(vii) Fokker Drawing W69335, Sheet 001, dated November 12, 2009.

(viii) Fokker Drawing W69405, Sheet 001, dated November 12, 2009.

(ix) Fokker Drawing W69710, Sheet 004, Issue B, dated November 12, 2008.

(2) At the next scheduled opening of the fuel tanks after the effective date of this AD, but no later than 84 months after the effective date of this AD, install the additional bonding provisions at the locations specified in, and in accordance with, Parts 1, 2, 7, 8, and 9 of the Accomplishment Instructions of Fokker Service Bulletin SBF100–28–069, dated August 17, 2012, which includes the attachments identified in paragraphs (g)(2)(i) through (g)(2)(ix) of this AD.

(i) Fokker Drawing W31036, Sheet 001, Issue A, dated November 12, 2012.

(ii) Fokker Drawing W69280, Sheet 001, Issue A, dated November 12, 2009.

(iii) Fokker Drawing W69350, Sheet 001, Issue A, dated November 12, 2009.

(iv) Fokker Drawing W69285, Sheet 001, Issue A, dated November 12, 2009.

(v) Fokker Drawing W69200, Sheet 001, Issue A, and Sheets 002 through 004, Issue B, dated November 12, 2009.

(vi) Fokker Drawing W69240, Sheet 001, Issue A, and Sheets 002 through 004, Issue B, dated November 12, 2009.

(vii) Fokker Drawing W69335, Sheet 001, dated November 12, 2009.

(viii) Fokker Drawing W69405, Sheet 001, dated November 12, 2009.

(ix) Fokker Drawing W69710, Sheet 004, Issue B, dated November 12, 2008.

(h) Revision of Maintenance or Inspection Program

Within 30 days after installing the bonding provisions specified in paragraph (g)(1) or (g)(2) of this AD, whichever occurs first: Revise the airplane maintenance or inspection program, as applicable, by incorporating the fuel airworthiness limitation items and critical design configuration control limitations (CDCCLs) specified in paragraph 1.L.(1)(c) of Fokker Service Bulletin SBF100–28–069, dated August 17, 2012.

(i) No Alternative Actions, Intervals, and/or CDCCLs

After accomplishing the revision required by paragraph (h) of this AD, no alternative actions (e.g., inspections), intervals, or CDCCLs may be used unless the actions, intervals, or CDCCLs are approved as an alternative method of compliance in accordance with the procedures specified in paragraph (j) of this AD.

(j) Other FAA AD Provisions

The following provisions also apply to this AD:

(1) *Alternative Methods of Compliance (AMOCs):* The Manager, International Branch, ANM–116, Transport Airplane Directorate, FAA, has the authority to approve AMOCs for this AD, if requested using the procedures found in 14 CFR 39.19. In accordance with 14 CFR 39.19, send your request to your principal inspector or local Flight Standards District Office, as appropriate. If sending information directly to the International Branch, send it to ATTN: Tom Rodriguez, Aerospace Engineer, International Branch; ANM–116, Transport Airplane Directorate, FAA, 1601 Lind Avenue SW., Renton, WA 98057–3356; telephone 425–227–1137; fax 425 227–1137. Information may be emailed to: *9-ANM-116-AMOC-REQUESTS@faa.gov.* Before using any approved AMOC, notify your appropriate principal inspector, or lacking a principal inspector, the manager of the local flight standards district office/certificate holding district office. The AMOC approval letter must specifically reference this AD.

(2) *Airworthy Product:* For any requirement in this AD to obtain corrective actions from a manufacturer, use these actions if they are FAA-approved. Corrective actions are considered FAA-approved if they were approved by the State of Design Authority (or its delegated agent, or by the Design Approval Holder with a State of Design Authority's design organization approval). You are required to ensure the product is airworthy before it is returned to service.

(k) Related Information

Refer to Mandatory Continuing Airworthiness Information (MCAI) European Aviation Safety Agency Airworthiness Directive 2012–0242, dated November 12, 2012, for related information. The MCAI may be found in the AD docket on the Internet at *http://www.regulations.gov/#!documentDetail;D=FAA-2013-0674-0002.*

(l) Material Incorporated by Reference

(1) The Director of the Federal Register approved the incorporation by reference (IBR) of the service information listed in this paragraph under 5 U.S.C. 552(a) and 1 CFR part 51.

(2) You must use this service information as applicable to do the actions required by this AD, unless this AD specifies otherwise.

(i) Fokker Service Bulletin SBF100–28–069, dated August 17, 2012, which includes the attachments identified in paragraphs (l)(2)(i)(A) through (l)(2)(i)(O) of this AD.

(A) Fokker Drawing W31036, Sheet 001, Issue A, dated November 12, 2012.

(B) Fokker Drawing W69280, Sheet 001, Issue A, dated November 12, 2009.

(C) Fokker Drawing W69350, Sheet 001, Issue A, dated November 12, 2009.

(D) Fokker Drawing W69285, Sheet 001, Issue A, dated November 12, 2009.

(E) Fokker Drawing W69200, Sheet 001, Issue A, dated November 12, 2009.

(F) Fokker Drawing W69200, Sheet 002, Issue B, dated November 12, 2009.

(G) Fokker Drawing W69200, Sheet 003, Issue B, dated November 12, 2009.

(H) Fokker Drawing W69200, Sheet 004, Issue B, dated November 12, 2009.

(I) Fokker Drawing W69240, Sheet 001, Issue A, dated November 12, 2009.

(J) Fokker Drawing W69240, Sheet 002, Issue B, dated November 12, 2009.

(K) Fokker Drawing W69240, Sheet 003, Issue B, dated November 12, 2009.

(L) Fokker Drawing W69240, Sheet 004, Issue B, dated November 12, 2009.

(M) Fokker Drawing W69335, Sheet 001, dated November 12, 2009.

(N) Fokker Drawing W69405, Sheet 001, dated November 12, 2009.

(O) Fokker Drawing W69710, Sheet 004, Issue B, dated November 12, 2008.

(ii) Reserved.

(3) For service information identified in this AD, contact Fokker Services B.V., Technical Services Dept., P.O. Box 1357, 2130 EL Hoofddorp, the Netherlands; telephone +31 (0)88–6280–350; fax +31 (0)88–6280–111; email *technicalservices@fokker.com;* Internet *http://www.myfokkerfleet.com.*

(4) You may view this service information at the FAA, Transport Airplane Directorate, 1601 Lind Avenue SW., Renton, WA. For information on the availability of this material at the FAA, call 425–227–1221.

(5) You may view this service information that is incorporated by reference at the National Archives and Records Administration (NARA). For information on the availability of this material at NARA, call 202–741–6030, or go to: *http://www.archives.gov/federal-register/cfr/ibr-locations.html.*

Issued in Renton, Washington, on March 27, 2014.

Jeffrey E. Duven,

Manager, Transport Airplane Directorate, Aircraft Certification Service.

[FR Doc. 2014–07326 Filed 4–4–14; 8:45 am]

BILLING CODE 4910–13–P

DEPARTMENT OF HEALTH AND HUMAN SERVICES

Food and Drug Administration

21 CFR Parts 556 and 558

[Docket No. FDA–2014–N–0002]

Zoetis Inc., et al.; Withdrawal of Approval of New Animal Drug Applications for Combination Drug Medicated Feeds Containing an Arsenical Drug; Correction

AGENCY: Food and Drug Administration, HHS.

ACTION: Notification of withdrawal of approval; correction.

SUMMARY: The Food and Drug Administration (FDA) published a document in the **Federal Register** of February 27, 2014, concerning the voluntary withdrawal of approval of new animal drug applications (NADAs). The document contained an incorrect list of NADAs.

DATES: This correction is effective April 7, 2014.

FOR FURTHER INFORMATION CONTACT: George K. Haibel, Center for Veterinary Medicine (HFV–6), Food and Drug Administration, 7519 Standish Pl., Rockville, MD 20855, 240–276–9019, *George.haibel@fda.hhs.gov.*

SUPPLEMENTARY INFORMATION: In FR Doc. 2014–02616, appearing on page 10974 in the **Federal Register** of February 27, 2014, the following corrections are made:

On page 10974, in the third column, in the 2d line of the ''SUMMARY'' section remove ''69'' and add in its place ''68''.

On page 10975, the first bulleted text ''Huvepharma AD, 5th Floor, 3A Nikolay Haitov Str., 1113 Sofia, Bulgaria has requested that FDA withdraw approval of the following 16 NADAs and 8 ANADAs'' is corrected to read ''Huvepharma AD, 5th Floor, 3A Nikolay Haitov Str., 1113 Sofia, Bulgaria, has requested that FDA withdraw approval of the following 15 NADAs and 8 ANADAs''; and on the same page in the table, the entry ''013–461 3–NITRO (roxarsone)/AMPROL Plus (amprolium and ethopabate).'' is removed.

Dated: April 2, 2014.

Bernadette Dunham,

Director, Center for Veterinary Medicine.

[FR Doc. 2014–07702 Filed 4–4–14; 8:45 am]

BILLING CODE 4160–01–P

DEPARTMENT OF THE TREASURY

Office of Foreign Assets Control

31 CFR Part 560

Iranian Transactions and Sanctions Regulations

AGENCY: Office of Foreign Assets Control, Treasury.

ACTION: Final rule.

SUMMARY: The Department of the Treasury's Office of Foreign Assets Control (''OFAC'') is adopting a final rule amending the Iranian Transactions and Sanctions Regulations (''ITSR'') by expanding an existing general license that authorizes the exportation or reexportation of food to individuals and entities in Iran to include the broader category of agricultural commodities. The rule also clarifies and adds certain definitions in OFAC regulations. Finally, the rule adds a new general license that authorizes the exportation or reexportation of certain replacement parts for certain medical devices.

DATES: *Effective:* April 7, 2014.

FOR FURTHER INFORMATION CONTACT: Assistant Director for Licensing, tel.: 202/622–2480, Assistant Director for Policy, tel.: 202/622–2746, Assistant Director for Regulatory Affairs, tel.: 202/622–4855, Assistant Director for Sanctions Compliance and Evaluation, tel.: 202/622–2490, Office of Foreign Assets Control, or Chief Counsel (Foreign Assets Control), tel.: 202/622–2410, Office of the General Counsel, Department of the Treasury (not toll free numbers).

SUPPLEMENTARY INFORMATION: OFAC is adopting a final rule amending the ITSR by expanding an existing general license that authorizes the exportation or reexportation of food to individuals and entities in Iran to include the broader category of agricultural commodities. Exports of certain specified items, as well as exports to certain persons, are excluded from the general license.

Additionally, OFAC is clarifying, for purposes of the general licenses in ITSR § 560.530, that the definitions of the terms agricultural commodities, medicine, and medical device include, in the case of items subject to the Export Administration Regulations, 15 CFR Part 730 *et seq.* (''EAR''), items that are designated as EAR99 and, in the case of items that are not subject to the EAR, items that would be designated as EAR99 if they were located in the United States.

Furthermore, this rule adds a definition of ''covered person,'' which, with respect to the exportation or reexportation of items subject to the EAR, is a U.S. person or a non-U.S. person, and for purposes of items not subject to the EAR, is a U.S. person, wherever located, or an entity owned or controlled by a U.S. person and established or maintained outside the United States (a ''U.S.-owned or -controlled foreign entity''). This amendment clarifies that, for purposes of the exportation or reexportation of items that are not subject to the EAR, and consistent with 31 CFR 560.556, the general licenses set forth in § 560.530 apply to any U.S. person, wherever located, or any U.S.-owned or -controlled foreign entity.

Finally, OFAC is adding a new general license that authorizes the exportation or reexportation of replacement parts for certain medical devices to individuals and entities in Iran provided that the replacement parts are designated under the EAR as EAR99, or would be designated as EAR99 if they were located in the United States, and limited to a one-for-one export or reexport basis. This rule also updates the definition of ''basic medical supplies'' to exclude the word ''basic'' and make related conforming changes. Accordingly, the ''List of Basic Medical

Supplies'' published on the OFAC Web site and in the **Federal Register** will now be called the ''List of Medical Supplies.''

Electronic and Facsimile Availability

This document and additional information concerning OFAC are available from OFAC's Web site (*www.treasury.gov/ofac*). Certain general information pertaining to OFAC's sanctions programs is also available via facsimile through a 24-hour fax-on-demand service, tel.: 202/622–0077.

Background

OFAC is adopting a final rule amending the ITSR, 31 CFR Part 560, by expanding the general license set forth in § 560.530(a)(2) that authorizes the exportation or reexportation of food to Iran to include the broader category of agricultural commodities. Exports of certain specified items, as well as exports to certain persons, are excluded from the general license. Additionally, OFAC is clarifying, for purposes of the general licenses in ITSR § 560.530, the definitions of the terms agricultural commodities, medicine, and medical device, as set forth in more detail below. Finally, OFAC is adding a new general license that authorizes the exportation or reexportation of replacement parts for certain medical devices to individuals and entities in Iran provided that the replacement parts are designated as EAR99, or would be designated as EAR99 if they were located in the United States, and further provided that the replacement parts are limited to a one-for-one export or reexport basis. Today's amendments also update the definition of ''basic medical supplies'' to exclude the word ''basic'' and make related conforming changes. Accordingly, the ''List of Basic Medical Supplies'' published on the OFAC Web site and in the **Federal Register** will now be called the ''List of Medical Supplies.''

The Trade Sanctions Reform and Export Enhancement Act of 2000, as amended (22 U.S.C. 7201 *et seq.*) (''TSRA''), provides that, with certain exceptions, the President may not impose a unilateral agricultural sanction or unilateral medical sanction against a foreign country or foreign entity unless, at least 60 days before imposing such a sanction, the President submits a report to Congress describing the proposed sanction and the reasons for it and Congress enacts a joint resolution approving the report. *See* 22 U.S.C. 7202. Section 906 of TSRA, however, requires in pertinent part that the export of agricultural commodities, medicine, or medical devices to the government of a country that has been determined by the Secretary of State, pursuant to, *inter alia,* section 6(j) of the Export Administration Act of 1979 (50 U.S.C. App. 2405(j)), to have repeatedly provided support for acts of international terrorism,[1] or to any entity in such a country, shall be made pursuant to one-year licenses issued by the United States Government, except that the requirements of such one-year licenses shall be no more restrictive than general licenses administered by the Department of the Treasury. *See* 22 U.S.C. 7205(a)(1). Section 906 also specifies that procedures be in place to deny licenses for exports of agricultural commodities, medicine, or medical devices to any entity within such country promoting international terrorism.

Moreover, as provided in section 221 of the USA PATRIOT Act (Pub. L. 107–56) (codified at 22 U.S.C. 7210), nothing in TSRA shall limit the application or scope of any law, including any Executive order or regulation promulgated pursuant to such law, establishing criminal or civil penalties for the unlawful export of any agricultural commodity, medicine, or medical device to a Foreign Terrorist Organization; a foreign organization, group, or person designated pursuant to Executive Orders 12947 or 13224 (sanctions on terrorists and certain supporters of terrorism); weapons of mass destruction or missile proliferators; or designated narcotics trafficking entities. In addition, TSRA itself provides in section 904(2) that the restrictions on the imposition of unilateral agricultural sanctions or unilateral medical sanctions shall not affect any authority or requirement to impose a sanction to the extent such sanction applies to any agricultural commodity, medicine, or medical device that is (A) controlled on the United States Munitions List (the ''USML''), (B) controlled on any control list established under the Export Administration Act of 1979 or any successor statute, or (C) used to facilitate the design, development, or production of chemical or biological weapons, missiles, or weapons of mass destruction. *See* 22 U.S.C. 7203(2).

On October 12, 2011, OFAC adopted a final rule issuing a general license set forth in the ITSR § 560.530(a)(2) authorizing the exportation or reexportation of food (as defined in the general license), including bulk agricultural commodities listed in appendix B to the ITSR, to the Government of Iran, to any individual or entity in Iran, or to persons in third countries purchasing specifically for resale to any of the foregoing, and the conduct of related transactions (*see* 76 FR 63191). Separately, OFAC has routinely issued specific licenses authorizing the exportation or reexportation of agricultural commodities (other than food items as previously defined in ITSR section 560.530(a)(2)) to the Government of Iran, individuals or entities in Iran, or persons in third countries purchasing specifically for resale to any of the foregoing, and the conduct of related transactions. In addition, OFAC has continued to review its TSRA licensing procedures, particularly the procedures for licensing exports of agricultural commodities.

As a result of this review, OFAC today is further expanding the general license set forth at ITSR § 560.530(a)(2), which, prior to today's amendment, authorized the exportation and reexportation of food (including bulk agricultural commodities listed on appendix B to the ITSR), to authorize the exportation or reexportation of the broader category of agricultural commodities, with certain specified exceptions, to the Government of Iran, to individuals or entities in Iran, or to persons in third countries purchasing specifically for resale to any of the foregoing, and the conduct of related transactions. Activities authorized pursuant to ITSR § 560.530(a)(2), as amended today, are subject to the proviso that, unless otherwise authorized by specific license, payment terms and financing for sales pursuant to the general license are limited to, and consistent with, those authorized by ITSR § 560.532, and the further proviso that all such exports or reexports must be shipped within the 12-month period beginning on the date of the signing of the contract for export or reexport. All food items authorized by the general license prior to today's amendment continue to be authorized under the general license, as amended. Each year, OFAC will determine whether to revoke this general license. Unless revoked, this general license will remain in effect.

OFAC has determined that the exportation or reexportation of a small number of specified agricultural commodities to the Government of Iran, to any individual or entity in Iran, or to persons in third countries purchasing specifically for resale to any of the foregoing, as well as the exportation or reexportation of agricultural commodities to military or law enforcement purchasers or importers, continue to require the level of review

[1] The Secretary of State has made such a determination with respect to Iran.

afforded by specific licensing. As a result, the general license set forth at ITSR § 560.530(a)(2), as amended today, does not authorize the exportation or reexportation to Iran of castor beans, castor bean seeds, certified pathogen-free eggs (unfertilized or fertilized), dried egg albumin, live animals (excluding live cattle), embryos (excluding cattle embryos), Rosary/Jequirity peas, non-food-grade gelatin powder, peptones and their derivatives, super absorbent polymers, western red cedar, or all fertilizers. (*See* ITSR § 560.530(a)(2)(ii) for the exclusion of these items.) Similarly, the general license, as amended today, does not authorize the exportation or reexportation of agricultural commodities to military or law enforcement purchasers or importers. (*See* ITSR § 560.530(a)(2)(iii) for the exclusion of these persons.) The general license, as amended today, also does not authorize any transaction or dealing with a person whose property and interests in property are blocked under, or who is designated or otherwise subject to any sanction under, *inter alia,* the terrorism, proliferation of weapons of mass destruction, or narcotics trafficking programs administered by OFAC. (*See* ITSR § 560.530(d)(5).)

Additionally, OFAC is clarifying, for purposes of the general licenses in ITSR § 560.530, that the definitions of the terms agricultural commodities, medicine, and medical device include, in the case of items subject to the Export Administration Regulations, 15 CFR Part 730 *et seq.* (''EAR''), items that are designated as EAR99 and, in the case of items that are not subject to the EAR, items that would be designated as EAR99 if they were located in the United States. (*See* ITSR § 560.530(e).) For example, a company located in the United States may be authorized under the general license set forth at § 560.530(a)(2) to arrange for the export from a third country to Iran of agricultural commodities produced in the third country if those commodities would be designated as EAR99 if they were located in the United States.

Furthermore, this rule adds a definition of *covered person,* which, with respect to the exportation or reexportation of items subject to the EAR, is a U.S. person or a non-U.S. person, and for purposes of items not subject to the EAR, a U.S. person, wherever located, or an entity owned or controlled by a U.S. person and established or maintained outside the United States (a ''U.S.-owned or -controlled foreign entity''). This amendment clarifies that, for purposes of the exportation or reexportation of items that are not subject to the EAR, and consistent with 31 CFR 560.556, the general licenses set forth in § 560.530 apply to any U.S. person, wherever located, or any U.S.-owned or -controlled foreign entity. For example, a U.S.-owned or -controlled foreign entity may be authorized under the general license set forth at § 560.530(a)(2) to arrange for the reexport to Iran of EAR99 medicines, as well as the export to Iran of medicines not subject to the EAR (*e.g.,* medicines produced outside the U.S. by a non-U.S. person with no controlled U.S. content) that would be designated as EAR99 if they were located in the United States.

The general licenses set forth at ITSR § 560.530(a)(2) through (4) do not authorize, and specific licenses are therefore still required for, the exportation or reexportation of the following to the Government of Iran (wherever located), to any individual or entity in Iran, or to persons in third countries purchasing specifically for resale to any of the foregoing, and for the conduct of related transactions:

—the excluded agricultural commodities specified in ITSR § 560.530(a)(2)(ii);
—the excluded medicines specified in ITSR § 560.530(a)(3)(iii);
—medical devices other than medical supplies as defined in § 560.530(a)(3)(ii); or
—agricultural commodities, medicine, or medical supplies to military or law enforcement purchasers or importers.

In the course of continually reviewing its TSRA licensing procedures, OFAC also adopted a final rule on October 22, 2012, issuing a new general license set forth at ITSR § 560.530(a)(3) authorizing the exportation or reexportation to Iran of medicine and basic medical supplies (as defined in the general license and included in a List of Basic Medical Supplies posted to OFAC's Web site) (*see* 77 FR 64664). The definition of basic medical supplies as originally published on October 22, 2012, specifically excluded replacement parts. On July 25, 2013, OFAC updated the List of Basic Medical Supplies to include additional items. This update added to the list, among other items, certain EAR99-designated accessories, components, and optional equipment for use with medical devices included elsewhere on the list, which are distinct from replacement parts.

OFAC has now determined, however, that the export or reexport of replacement parts for certain medical devices should be authorized, provided that the replacement parts are designated as EAR99 or, in the case of replacement parts that are not subject to the EAR, would be designated as EAR99 if they were located in the United States, and further provided that the replacement parts are limited to a one-for-one basis (*i.e.,* only one replacement part can be exported or reexported to replace a broken or non-operational component). Accordingly, OFAC today is issuing a new general license set forth at ITSR § 560.530(a)(4) authorizing the exportation or reexportation of replacement parts that are designated as EAR99, or that would be designated as EAR99 if they were located in the United States, for medical devices on a one-for-one basis and with certain exceptions, to the Government of Iran, to individuals or entities in Iran, or to persons in third countries purchasing specifically for resale to any of the foregoing, and the conduct of related transactions. Each year, OFAC will determine whether to revoke this general license. Unless revoked, this general license will remain in effect.

Public Participation

Because the amendment of 31 CFR Part 560 involves a foreign affairs function, the provisions of Executive Order 12866 of September 30, 1993, and the Administrative Procedure Act (5 U.S.C. 553), requiring notice of proposed rulemaking, opportunity for public participation, and delay in effective date, are inapplicable. Because no notice of proposed rulemaking is required for this rule, the Regulatory Flexibility Act (5 U.S.C. 601–612) does not apply.

Paperwork Reduction Act

The collections of information related to the Regulations are contained in 31 CFR Part 501 (the ''Reporting, Procedures and Penalties Regulations''). Pursuant to the Paperwork Reduction Act of 1995 (44 U.S.C. 3507), those collections of information have been approved by the Office of Management and Budget under control number 1505–0164. An agency may not conduct or sponsor, and a person is not required to respond to, a collection of information unless the collection of information displays a valid control number.

List of Subjects in 31 CFR Part 560

Administrative practice and procedure, Agricultural commodities, Banks, Banking, Blocking of assets, Drugs, Exports, Food, Foreign trade, Humanitarian aid, Investments, Iran, Loans, Medical devices, Medicine, Penalties, Services, Specially designated nationals, Terrorism, Transportation, Weapons of mass destruction.

For the reasons set forth in the preamble, the Department of the Treasury's Office of Foreign Assets Control amends 31 CFR Part 560 as follows:

PART 560—IRANIAN TRANSACTIONS AND SANCTIONS REGULATIONS

■ 1. The authority citation for part 560 is revised to read as follows:

Authority: 3 U.S.C. 301; 18 U.S.C. 2339B, 2332d; 22 U.S.C. 2349aa–9; 22 U.S.C. 7201–7211; 31 U.S.C. 321(b); 50 U.S.C. 1601–1651, 1701–1706; Pub. L. 101–410, 104 Stat. 890 (28 U.S.C. 2461 note); Pub. L. 110–96, 121 Stat. 1011 (50 U.S.C. 1705 note); Pub. L. 111–195, 124 Stat. 1312 (22 U.S.C. 8501–8551); Pub. L. 112–81, 125 Stat. 1298 (22 U.S.C. 8513a); Pub. L. 112–158, 126 Stat. 1214 (22 U.S.C. 8701–8795); E.O. 12613, 52 FR 41940, 3 CFR, 1987 Comp., p. 256; E.O. 12957, 60 FR 14615, 3 CFR, 1995 Comp., p. 332; E.O. 12959, 60 FR 24757, 3 CFR, 1995 Comp., p. 356; E.O. 13059, 62 FR 44531, 3 CFR, 1997 Comp., p. 217; E.O. 13599, 77 FR 6659, February 8, 2012; E.O. 13622, 77 FR 45897, August 2, 2012; E.O. 13628, 77 FR 62139, October 12, 2012.

Subpart D—Interpretations

■ 2. Amend § 560.405 by revising the note to paragraph (e) to read as follows:

§ 560.405 Transactions ordinarily incident to a licensed transaction authorized.

* * * * *

Note to Paragraph (e) of § 560.405: *See* § 560.530(a)(2) through (4) for general licenses authorizing, with certain exceptions, the exportation or reexportation of agricultural commodities, medicine, medical supplies, and replacement parts for certain medical devices to the Government of Iran, individuals or entities in Iran, or persons in third countries purchasing specifically for resale to any of the foregoing. These general licenses also authorize the conduct of related transactions, including, but not limited to, financing and payment, provided that payment terms and financing are limited to, and consistent with, § 560.532, which sets forth payment terms for sales authorized by one of the general licenses set forth in paragraphs (a)(2) through (4) of § 560.530 or by a specific license issued pursuant to paragraph (a)(1) of the same section.

Subpart E—Licenses, Authorizations and Statements of Licensing Policy

■ 3. Amend § 560.530 by revising paragraphs (a), (b), (c) introductory text, (c)(4) and (5), adding paragraph (d)(6), revising paragraphs (e)(1)(i), (e)(1)(ii) introductory text, (e)(2) introductory text, and (e)(3), and adding paragraph (e)(4) to read as follows:

§ 560.530 Commercial sales, exportation, and reexportation of agricultural commodities, medicine, and medical devices.

(a)(1) *One-year license requirement.* (i) The exportation or reexportation of agricultural commodities, medicine, and medical devices that are not covered by the general licenses in paragraphs (a)(2) through (4) of this section (as set forth in paragraph (a)(1)(ii) of this section) to the Government of Iran, to any individual or entity in Iran, or to persons in third countries purchasing specifically for resale to any of the foregoing, shall only be made pursuant to a one-year specific license issued by the Office of Foreign Assets Control (''OFAC'') for contracts entered into during the one year period of the license and shipped within the 12-month period beginning on the date of the signing of the contract. No specific license will be granted for the exportation or reexportation of the items set forth in paragraph (a)(1)(ii) of this section to any entity or individual in Iran promoting international terrorism, to any individual or entity designated pursuant to Executive Order 12947 (60 FR 5079, 3 CFR, 1995 Comp., p. 356), Executive Order 13224 (66 FR 49079, 3 CFR, 2001 Comp., p. 786), or Public Law 104–132, to any narcotics trafficking entity designated pursuant to Executive Order 12978 of October 21, 1995 (60 FR 54579, 3 CFR, 1995 Comp., p. 415) or the Foreign Narcotics Kingpin Designation Act (21 U.S.C. 1901–1908), or to any foreign organization, group, or persons subject to any restriction for its or their involvement in weapons of mass destruction or missile proliferation. Executory contracts entered into pursuant to paragraph (b)(2) of this section prior to the issuance of a one-year license described in this paragraph shall be deemed to have been signed on the date of issuance of that one-year license (and, therefore, the exporter is authorized to make shipments under that contract within the 12-month period beginning on the date of issuance of the one-year license).

(ii) For the purposes of this part, ''agricultural commodities, medicine, and medical devices that are not covered by the general licenses in paragraphs (a)(2) through (4) of this section'' are:

(A) The excluded agricultural commodities specified in paragraph (a)(2)(ii) of this section;

(B) The excluded medicines specified in paragraph (a)(3)(iii) of this section;

(C) Medical devices (as defined in paragraph (e)(3) of this section) other than medical supplies (as defined in paragraph (a)(3)(ii) of this section); and

(D) Agricultural commodities (as defined in paragraph (e)(1) of this section), medicine (as defined in paragraph (e)(2) of this section), and medical supplies (as defined in paragraph (a)(3)(ii) of this section) to military or law enforcement purchasers or importers.

(2)(i) *General license for the exportation or reexportation of agricultural commodities.* Except as provided in paragraphs (a)(2)(ii) and (iii) of this section, the exportation or reexportation by a covered person (as defined in paragraph (e)(4) of this section) of agricultural commodities (as defined in paragraph (e)(1) of this section) (including bulk agricultural commodities listed in appendix B to this part) to the Government of Iran, to any individual or entity in Iran, or to persons in third countries purchasing specifically for resale to any of the foregoing, and the conduct of related transactions, including, but not limited to, the making of shipping and cargo inspection arrangements, the obtaining of insurance, the arrangement of financing and payment, shipping of the goods, receipt of payment, and the entry into contracts (including executory contracts), are hereby authorized, provided that, unless otherwise authorized by specific license, payment terms and financing for sales pursuant to this general license are limited to, and consistent with, those authorized by § 560.532 of this part; and further provided that all such exports and reexports are shipped within the 12-month period beginning on the date of the signing of the contract for export or reexport.

(ii) *Excluded agricultural commodities.* Paragraph (a)(2)(i) of this section does not authorize the exportation or reexportation of the following items: castor beans, castor bean seeds, certified pathogen-free eggs (unfertilized or fertilized), dried egg albumin, live animals (excluding live cattle), embryos (excluding cattle embryos), Rosary/Jequirity peas, non-food-grade gelatin powder, peptones and their derivatives, super absorbent polymers, western red cedar, or all fertilizers.

(iii) *Excluded persons.* Paragraph (a)(2)(i) of this section does not authorize the exportation or reexportation of agricultural commodities to military or law enforcement purchasers or importers.

Note to Paragraph (a)(2) of § 560.530: Consistent with section 906(a)(1) of the Trade Sanctions Reform and Export Enhancement Act of 2000 (22 U.S.C. 7205), each year OFAC will determine whether to revoke this general

license. Unless revoked, the general license will remain in effect.

(3)(i) *General license for the exportation or reexportation of medicine and medical supplies.* Except as provided in paragraphs (a)(3)(iii) and (iv) of this section, the exportation or reexportation by a covered person (as defined in paragraph (e)(4) of this section) of medicine (as defined in paragraph (e)(2) of this section) and medical supplies (as defined in paragraph (a)(3)(ii) of this section) to the Government of Iran, to any individual or entity in Iran, or to persons in third countries purchasing specifically for resale to any of the foregoing, and the conduct of related transactions, including, but not limited to, the making of shipping and cargo inspection arrangements, the obtaining of insurance, the arrangement of financing and payment, shipping of the goods, receipt of payment, and the entry into contracts (including executory contracts), are hereby authorized, provided that, unless otherwise authorized by specific license, payment terms and financing for sales pursuant to this general license are limited to, and consistent with, those authorized by § 560.532 of this part; and further provided that all such exports or reexports are shipped within the 12-month period beginning on the date of the signing of the contract for export or reexport.

(ii) *Definition of medical supplies.* For purposes of this general license, the term *medical supplies* means those medical devices, as defined in paragraph (e)(3) of this section, that are included on the List of Medical Supplies on OFAC's Web site (*www.treasury.gov/ofac*) on the Iran Sanctions page.

Note to Paragraph (a)(3)(ii) of § 560.530: The List of Medical Supplies is maintained on OFAC's Web site (*www.treasury.gov/ofac*) on the Iran Sanctions page. The list also will be published in the **Federal Register**, as will any changes to the list. The List of Medical Supplies contains those medical devices for which OFAC previously did not require an Official Commodity Classification of EAR99 issued by the Department of Commerce's Bureau of Industry and Security to be submitted with a specific license application and which are now generally licensed.

(iii) *Excluded medicines.* Paragraph (a)(3)(i) of this section does not authorize the exportation or reexportation of the following medicines: non-NSAID analgesics, cholinergics, anticholinergics, opioids, narcotics, benzodiazapenes, and bioactive peptides.

(iv) *Excluded persons.* Paragraph (a)(3)(i) of this section does not authorize the exportation or reexportation of medicine or medical supplies to military or law enforcement purchasers or importers.

Note to Paragraph (a)(3) of § 560.530: Consistent with section 906(a)(1) of the Trade Sanctions Reform and Export Enhancement Act of 2000 (22 U.S.C. 7205), each year, OFAC will determine whether to revoke this general license. Unless revoked, the general license will remain in effect.

(4) *General license for the exportation or reexportation of replacement parts for certain medical devices.* (i) The exportation or reexportation by a covered person (as defined in paragraph (e)(4) of this section) of replacement parts for medical devices (as defined in paragraph (e)(3) of this section) exported or reexported pursuant to paragraphs (a)(1) or (a)(3)(i) of this section to the Government of Iran, to any individual or entity in Iran, or to persons in third countries purchasing specifically for resale to any of the foregoing, and the conduct of related transactions, including, but not limited to, the making of shipping and cargo inspection arrangements, the obtaining of insurance, the arrangement of financing and payment, shipping of the goods, receipt of payment, and the entry into contracts (including executory contracts), are hereby authorized, provided that, unless otherwise authorized by specific license, payment terms and financing for sales pursuant to this general license are limited to, and consistent with, those authorized by § 560.532 of this part; provided that such replacement parts are designated as EAR99, or, in the case of replacement parts that are not subject to the Export Administration Regulations, 15 CFR parts 730 *et seq.* (''EAR''), would be designated as EAR99 if they were located in the United States; and further provided that such replacement parts are limited to a one-for-one export or reexport basis (*i.e.,* only one replacement part can be exported or reexported to replace a broken or non-operational component).

(ii) *Excluded persons.* Paragraph (a)(4)(i) of this section does not authorize the exportation or reexportation of replacement parts for medical devices to military or law enforcement purchasers or importers.

Note to Paragraph (a)(4) of § 560.530: Consistent with section 906(a)(1) of the Trade Sanctions Reform and Export Enhancement Act of 2000 (22 U.S.C. 7205), each year, OFAC will determine whether to revoke this general license. Unless revoked, the general license will remain in effect.

(b) *General license for arrangement of exportation and reexportation of covered products that require a specific license.* (1) With respect to sales authorized pursuant to paragraph (a)(1)(i) of this section, the making of shipping arrangements, cargo inspections, obtaining of insurance, and arrangement of financing (consistent with § 560.532) for the exportation or reexportation of agricultural commodities, medicine, and medical devices that are not covered by the general licenses in paragraphs (a)(2) through (4) of this section (as set forth in paragraph (a)(1)(ii) of this section) to the Government of Iran, to any individual or entity in Iran, or to persons in third countries purchasing specifically for resale to any of the foregoing, are authorized.

(2) Entry into executory contracts (including executory pro forma invoices, agreements in principle, or executory offers capable of acceptance such as bids in response to public tenders) for the exportation or reexportation of agricultural commodities, medicine, and medical devices that are not covered by the general licenses in paragraphs (a)(2) through (4) of this section (as set forth in paragraph (a)(1)(ii) of this section) to the Government of Iran, to any individual or entity in Iran, or to persons in third countries purchasing specifically for resale to any of the foregoing, is authorized, provided that the performance of an executory contract is expressly made contingent upon the prior issuance of a one-year specific license described in paragraph (a)(1)(i) of this section.

(c) *Instructions for obtaining one-year licenses.* In order to obtain the one-year specific license described in paragraph (a)(1)(i) of this section, the exporter must provide to OFAC:

* * * * *

(4) A description of all items to be exported or reexported pursuant to the requested one-year license, including a statement that the items are designated as EAR99, or would be designated as EAR99 if they were located in the United States, and, if necessary, documentation sufficient to verify that the items to be exported or reexported are designated as EAR99, or would be designated as EAR99 if they were located in the United States, and do not fall within any of the limitations contained in paragraph (d) of this section; and

(5) For items subject to the EAR, an Official Commodity Classification of EAR99 issued by the Department of Commerce's Bureau of Industry and Security (''BIS''), certifying that the product is designated as EAR99, is

required to be submitted to OFAC with the request for a license authorizing the exportation or reexportation of all fertilizers, live horses, western red cedar, or medical devices other than medical supplies (as defined in § 560.530(a)(3)(ii)). *See* 15 CFR 745.3 for instructions for obtaining an Official Commodity Classification of EAR99 from BIS.

(d) * * *

(6) Nothing in this section or in any general or specific license set forth in or issued pursuant to paragraph (a) of this section authorizes the exportation or reexportation of any agricultural commodity, medicine, or medical device that is not designated as EAR99 or, in the case of any agricultural commodity, medicine, or medical device not subject to the EAR, would not be designated as EAR99 if it were located in the United States.

(e) * * *

(1) * * *

(i) In the case of products subject to the EAR, 15 CFR part 774, products that are designated as EAR99, and, in the case of products not subject to the EAR, products that would be designated as EAR99 under the EAR if they were located in the United States, in each case that fall within the term ''agricultural commodity'' as defined in section 102 of the Agricultural Trade Act of 1978 (7 U.S.C. 5602); and

(ii) In the case of products subject to the EAR, products that are designated as EAR99, and in the case of products not subject to the EAR, products that would be designated as EAR99 if they were located in the United States, in each case that are intended for ultimate use in Iran as:

* * * * *

(2) *Medicine.* For the purposes of this part, *medicine* is an item that falls within the definition of the term ''drug'' in section 201 of the Federal Food, Drug, and Cosmetic Act (21 U.S.C. 321) and that, in the case of an item subject to the EAR, is designated as EAR99 or, in the case of an item not subject to the EAR, that would be designated as EAR99, if it were located in the United States.

* * * * *

(3) *Medical device.* For the purposes of this part, a *medical device* is an item that falls within the definition of ''device'' in section 201 of the Federal Food, Drug, and Cosmetic Act (21 U.S.C. 321) and that, in the case of an item subject to the EAR, is designated as EAR99, or in the case of an item not subject to the EAR, that would be designated as EAR99 if it were located in the United States.

(4) *Covered person.* For purposes of this part, a *covered person* is, with respect to the exportation or reexportation of items subject to the EAR, a U.S. person or a non-U.S. person, and for purposes of items not subject to the EAR, a U.S. person, wherever located, or an entity owned or controlled by a U.S. person and established or maintained outside the United States.

* * * * *

■ 4. Amend § 560.533 by revising paragraphs (a) and (b) to read as follows:

§ 560.533 Brokering sales of agricultural commodities, medicine, and medical devices.

(a) *General license for brokering sales by U.S. persons.* United States persons are authorized to provide brokerage services on behalf of U.S. persons for the sale and exportation or reexportation by U.S. persons of agricultural commodities, medicine, and medical devices, provided that the sale and exportation or reexportation is authorized, as applicable, by a one-year specific license issued pursuant to paragraph (a)(1)(i) of § 560.530 or by one of the general licenses set forth in paragraphs (a)(2), (a)(3), and (a)(4) of § 560.530.

(b) *Specific licensing for brokering sales by non-U.S. persons of agricultural commodities.* Specific licenses may be issued on a case-by-case basis to permit U.S. persons to provide brokerage services on behalf of non-U.S., non-Iranian persons for the sale and exportation or reexportation of agricultural commodities to the Government of Iran, entities in Iran, or individuals in Iran. Specific licenses issued pursuant to this section will authorize the brokering only of sales that are to purchasers permitted pursuant to § 560.530.

Note To Paragraph (b) of § 560.533: Requests for specific licenses to provide brokerage services under this paragraph must include all of the information described in § 560.530(c).

* * * * *

Dated: March 31, 2014.

Adam J. Szubin,

Director, Office of Foreign Assets Control.

[FR Doc. 2014–07572 Filed 4–4–14; 8:45 am]

BILLING CODE P

DEPARTMENT OF HOMELAND SECURITY

Coast Guard

33 CFR Part 100

[Docket No. USCG–2014–0113]

Special Local Regulation; Annual Marine Events on the Colorado River, Between Davis Dam (Bullhead City, Arizona) and Headgate Dam (Parker, Arizona) Within the San Diego Captain of the Port Zone

AGENCY: Coast Guard, DHS.

ACTION: Notice of enforcement of regulation.

SUMMARY: The Coast Guard will enforce the 2014 Lake Havasu Desert Storm marine event special local regulations on April 26, 2014. This annual marine event occurs on the navigable waters of the Colorado River in Lake Havasu, Arizona. This action is necessary to provide for the safety of the participants, crew, spectators, safety vessels, and general users of the waterway. During the enforcement period, persons and vessels are prohibited from entering into, transiting through, or anchoring within this regulated area unless authorized by the Captain of the Port, or his designated representative.

DATES: This rule is effective from 8 a.m. to 2 p.m. April 26, 2014. If the event is delayed by inclement weather, these regulations will also be enforced on April 27, 2014, from 8 a.m. to 2 p.m.

FOR FURTHER INFORMATION CONTACT: If you have questions on this notice, call or email Lieutenant Commander John Bannon, Waterways Management, U.S. Coast Guard Sector San Diego, CA; telephone 619–278–7261, email *John.E.Bannon@uscg.mil*.

SUPPLEMENTARY INFORMATION: The Coast Guard will enforce the Special Local Regulations in Lake Havasu for the 2014 Desert Storm Shootout in 33 CFR 100.1102, Table 1, Item 4 from 8 a.m. to 2 p.m. on April 26, 2014. If the event is delayed by inclement weather, these regulations will also be enforced on April 27, 2014, from 8 a.m. to 2 p.m.

Under provisions of 33 CFR 100.1102, persons and vessels are prohibited from entering into, transiting through, or anchoring within the regulated area, unless authorized by the Coast Guard Captain of the Port or his designated representative. Persons or vessels desiring to enter into or pass through the special local regulations may request permission from the Captain of the Port or a designated representative. If

permission is granted, all persons and vessels shall comply with the instructions of the Caption of the Port or his designated representative. Spectator vessels may safely transit outside the regulated area but may not anchor, block, loiter, or impede the transit of participants or official patrol vessels. The Coast Guard may be assisted by other Federal, State, or Local law enforcement agencies in enforcing this regulation.

This notice is issued under authority of 33 CFR 100.1102 and 5 U.S.C. 552(a). In addition to this notice in the **Federal Register**, the Coast Guard will provide the maritime community with extensive advance notification of this enforcement period via the Local Notice to Mariners, Broadcast Notice to Mariners, and local advertising by the event sponsor.

If the Sector San Diego Captain of the Port or his designated representative determines that the regulated area need not be enforced for the full duration stated on this notice, he or she may use a Broadcast Notice to Mariners to grant general permission to enter the regulated area.

Dated: March 20, 2014.

S. M. Mahoney,

Captain, U.S. Coast Guard, Captain of the Port San Diego.

[FR Doc. 2014–07604 Filed 4–4–14; 8:45 am]

BILLING CODE 9110–04–P

DEPARTMENT OF HOMELAND SECURITY

Coast Guard

33 CFR Part 117

[Docket No. USCG–2014–0191]

Drawbridge Operation Regulation; Willamette River, Portland, OR

AGENCY: Coast Guard, DHS.

ACTION: Notice of deviation from drawbridge regulation.

SUMMARY: The Coast Guard has issued a temporary deviation from the operating schedule that governs the Broadway Bridge across the Willamette River, mile 11.7, at Portland, OR. The deviation is necessary to accommodate the Portland Race for the Roses event. This deviation allows the bridge to remain in the down or closed position to facilitate safe movement of event participants.

DATES: This deviation is effective from 4:30 a.m. to 9:30 a.m. April 13, 2014.

ADDRESSES: The docket for this deviation, [USCG–2014–0191] is available at *http://www.regulations.gov*. Type the docket number in the ''SEARCH'' box and click ''SEARCH.'' Click on Open Docket Folder on the line associated with this deviation. You may also visit the Docket Management Facility in Room W12–140 on the ground floor of the Department of Transportation West Building, 1200 New Jersey Avenue SE., Washington, DC 20590, between 9 a.m. and 5 p.m., Monday through Friday, except Federal holidays.

FOR FURTHER INFORMATION CONTACT: If you have questions on this temporary deviation, call or email Mr. Steven Fischer, Bridge Administrator, Thirteenth Coast Guard District; telephone 206–220–7282, email *Steven.M.Fischer@uscg.mil*. If you have questions on viewing the docket, call Cheryl Collins, Program Manager, Docket Operations, telephone 202–366–9826.

SUPPLEMENTARY INFORMATION: Multnomah County has requested that the Broadway Bascule Bridge remain closed to vessel traffic to facilitate safe, uninterrupted roadway passage of participants in the Portland Race for the Roses event. The Broadway Bridge crosses the Willamette River at mile 11.7 and provides 90 feet of vertical clearance above Columbia River Datum 0.0 while in the closed position. Vessels able to pass through the bridge in the closed positions may do so at anytime. The bridge will be able to open for emergencies and there is no immediate alternate route for vessels to pass.

Under normal conditions this bridge operates in accordance with 33 CFR 117.897, which allows for the bridge to remain closed between 7 a.m. and 9 a.m. and 4 p.m. and 6 p.m. Monday through Friday and also requires advance notification when a bridge opening is needed. This deviation allows the bascule span of the Broadway Bridge across the Willamette River, mile 11.7, to remain in the closed position and need not open for maritime traffic from 4:30 a.m. April 13, 2014 to 9:30 a.m. April 13, 2014. The bridge shall operate in accordance to 33 CFR 117.897 at all other times.

Waterway usage on this stretch of the Willamette River includes vessels ranging from commercial tug and barge to small pleasure craft. Mariners will be notified and kept informed of the bridges' operational status via the Coast Guard Notice to Mariners publication and Broadcast Notice to Mariners as appropriate. The bridge will be required to open, if needed, for vessels engaged in emergency response operations during this closure period.

In accordance with 33 CFR 117.35(e), the drawbridge must return to its regular operating schedule immediately at the end of the effective period of this temporary deviation. This deviation from the operating regulations is authorized under 33 CFR 117.35.

Dated: March 19, 2014.

Steven M. Fischer,

Bridge Administrator, Thirteenth Coast Guard District.

[FR Doc. 2014–07607 Filed 4–4–14; 8:45 am]

BILLING CODE 9110–04–P

DEPARTMENT OF HOMELAND SECURITY

Coast Guard

33 CFR Part 117

[Docket No. USCG–2014–0190]

Drawbridge Operation Regulation; Willamette River, Portland, OR

AGENCY: Coast Guard, DHS.

ACTION: Notice of deviation from drawbridge regulation.

SUMMARY: The Coast Guard has issued a temporary deviation from the operating schedule that governs the Steel Bridge across the Willamette River, miles 12.1, at Portland, Oregon. This deviation is necessary to accommodate the Race for the Roses event. This deviation allows the upper deck of the Steel Bridge to remain in the closed position to facilitate safe movement of event participants.

DATES: This deviation is effective from 7:00 a.m. to 11:00 a.m. on April 13, 2014.

ADDRESSES: The docket for this deviation, [USCG–2014–0190] is available at *http://www.regulations.gov*. Type the docket number in the ''SEARCH'' box and click ''SEARCH.'' Click on Open Docket Folder on the line associated with this deviation. You may also visit the Docket Management Facility in Room W12–140 on the ground floor of the Department of Transportation West Building, 1200 New Jersey Avenue SE., Washington, DC 20590, between 9 a.m. and 5 p.m., Monday through Friday, except Federal holidays.

FOR FURTHER INFORMATION CONTACT: If you have questions on this temporary deviation, call or email Mr. Steven Fischer, Bridge Administrator, Thirteenth Coast Guard District; telephone 206–220–7282, email *Steven.M.Fischer@uscg.mil*. If you have questions on viewing the docket, call Cheryl Collins, Program Manager, Docket Operations, telephone 202–366–9826.

SUPPLEMENTARY INFORMATION: The City of Portland has requested that the upper deck of the Steel Bridge remain closed and need not open for vessel traffic in order to facilitate safe efficient movement of event participants in the Race for the Roses event. The Steel Bridge crosses the Willamette River at mile 12.1 and is a double-deck lift bridge with a lower lift deck and an upper lift deck which operate independent of each other. When both decks are in the down position the bridge provides 26 feet of vertical clearance above Columbia River Datum 0.0. When the lower deck is in the up position the bridge provides 71 feet of vertical clearance above Columbia River Datum 0.0. This deviation does not affect the operating schedule of the lower deck which opens on signal. Vessels which do not require an opening of the upper deck of the bridge may continue to transit beneath the bridge and, if needed, may obtain an opening of the lower deck of the bridge for passage during this closure period of the upper deck.

Under normal conditions the upper deck of the Steel Bridge operates in accordance with 33 CFR 117.897(c)(3)(ii), which states that from 8 a.m. to 5 p.m. Monday through Friday one hour advance notice shall be given for draw openings and at all other times two hours advance notice shall be given to obtain an opening. This deviation allows the Steel Bridge upper deck to remain in the closed position and need not open for maritime traffic from 7:00 a.m. to 11:00 a.m. on April 13, 2014. The bridge shall operate in accordance with 33 CFR 117.897 at all other times.

Waterway usage on this stretch of the Willamette River includes vessels ranging from commercial tug and barge to small pleasure craft. Mariners will be notified and kept informed of the bridges' operational status via the Coast Guard Notice to Mariners publication and Broadcast Notice to Mariners as appropriate. The bridge will be required to open, if needed, for vessels engaged in emergency response operations during this closure period.

In accordance with 33 CFR 117.35(e), the drawbridge must return to its regular operating schedule immediately at the end of the effective period of this temporary deviation. This deviation from the operating regulations is authorized under 33 CFR 117.35.

Dated: March 19, 2014.

Steven M. Fischer,

Bridge Administrator, Thirteenth Coast Guard District.

[FR Doc. 2014–07611 Filed 4–4–14; 8:45 am]

BILLING CODE 9110–04–P

ENVIRONMENTAL PROTECTION AGENCY

40 CFR Part 52

[EPA–R05–OAR–2014–0117; FRL–9907–50–Region 5]

Approval and Promulgation of Air Quality Implementation Plans; Illinois; 10-Year FESOP Amendments

AGENCY: Environmental Protection Agency (EPA).

ACTION: Direct final rule.

SUMMARY: The Environmental Protection Agency (EPA) is approving Illinois' rule revision to extend the term for an initial permit or renewal of a Federally Enforceable State Operating Permit (FESOP) from five years to ten years. Illinois submitted this rule revision for approval on January 9, 2014. FESOPs apply to non-major sources that obtain enforceable limits to avoid being subject to certain Clean Air Act (Act) requirements, including the Title V operating permit program. This revision meets the Federal requirements found in the June 28, 1989, rule addressing Federal enforceability of FESOPs. This rule revision is expected to reduce the administrative costs of the permitting process for both the affected sources and the Illinois Environmental Protection Agency (IEPA). It will also allow IEPA to devote more resources to major source Title V permitting actions and permit modifications for both Title V and FESOP sources.

DATES: This direct final rule is effective June 6, 2014, unless EPA receives adverse comments by May 7, 2014. If adverse comments are received, EPA will publish a timely withdrawal of the direct final rule in the **Federal Register** informing the public that the rule will not take effect.

ADDRESSES: Submit your comments, identified by Docket ID No. EPA–R05–OAR–2014–0117, by one of the following methods:

1. *www.regulations.gov:* Follow the on-line instructions for submitting comments.
2. Email: *damico.genevieve@epa.gov.*
3. Fax: (312) 886–0968.
4. Mail: Genevieve Damico, Chief, Air Permits Section, Air Programs Branch (AR–18J), U.S. Environmental Protection Agency, 77 West Jackson Boulevard, Chicago, Illinois 60604.
5. Hand Delivery: Genevieve Damico, Chief, Air Permits Section, Air Programs Branch (AR–18J), U.S. Environmental Protection Agency, 77 West Jackson Boulevard, Chicago, Illinois 60604. Such deliveries are only accepted during the Regional Office normal hours of operation, and special arrangements should be made for deliveries of boxed information. The Regional Office official hours of business are Monday through Friday, 8:30 a.m. to 4:30 p.m., excluding Federal holidays.

Instructions: Direct your comments to Docket ID No. EPA–R05–OAR–2014–0117. EPA's policy is that all comments received will be included in the public docket without change and may be made available online at *www.regulations.gov,* including any personal information provided, unless the comment includes information claimed to be Confidential Business Information (CBI) or other information whose disclosure is restricted by statute. Do not submit information that you consider to be CBI or otherwise protected through *www.regulations.gov* or email. The *www.regulations.gov* Web site is an ''anonymous access'' system, which means EPA will not know your identity or contact information unless you provide it in the body of your comment. If you send an email comment directly to EPA without going through *www.regulations.gov* your email address will be automatically captured and included as part of the comment that is placed in the public docket and made available on the Internet. If you submit an electronic comment, EPA recommends that you include your name and other contact information in the body of your comment and with any disk or CD–ROM you submit. If EPA cannot read your comment due to technical difficulties and cannot contact you for clarification, EPA may not be able to consider your comment. Electronic files should avoid the use of special characters, any form of encryption, and be free of any defects or viruses.

Docket: All documents in the docket are listed in the *www.regulations.gov* index. Although listed in the index, some information is not publicly available, e.g., CBI or other information whose disclosure is restricted by statute. Certain other material, such as copyrighted material, will be publicly available only in hard copy. Publicly available docket materials are available either electronically in *www.regulations.gov* or in hard copy at the Environmental Protection Agency, Region 5, Air and Radiation Division, 77 West Jackson Boulevard, Chicago, Illinois 60604. This facility is open from 8:30 a.m. to 4:30 p.m., Monday through Friday, excluding Federal holidays. We recommend that you telephone Constantine Blathras, Environmental Engineer, at (312) 886–0671 before visiting the Region 5 office.

FOR FURTHER INFORMATION CONTACT: Constantine Blathras, Environmental Engineer, Air Permits Section, Air Programs Branch (AR–18J), Environmental Protection Agency, Region 5, 77 West Jackson Boulevard, Chicago, Illinois 60604, (312) 886–0671, *blathras.constantine@epa.gov.*

SUPPLEMENTARY INFORMATION: Throughout this document whenever ''we,'' ''us,'' or ''our'' is used, we mean EPA. This supplementary information section is arranged as follows:

I. What action is EPA taking?
II. Statutory and Executive Order Reviews.

I. What action is EPA taking?

EPA is approving the revisions to Illinois Administrative Code (Ill. Adm. Code) Section 201.162(a) regarding the permit terms for FESOPs. Ill. Adm. Code Section 201.162(a) is a general provision in the Illinois permitting rules that cites the term of a permit. This section has been modified to add a provision stating that a FESOP permit is effective for a permit term not to exceed ten years. IEPA retains the discretion that it currently has under Section 201.162 to issue permits for a term that is shorter than the maximum. This provision does not apply to Title V permits issued by the IEPA.

EPA approved the Illinois FESOP program into the state implementation plan (SIP) on December 17, 1992 (57 FR 59928). In its approval of Illinois' FESOP program, EPA determined that Illinois' program was consistent with those requirements. On January 9, 2014, IEPA submitted a revision to the FESOP regulations at 35 Ill. Adm. Code Section 201.162 requesting EPA approval as a revision to the SIP to increase the FESOP term from five years to ten years. EPA's requirements for FESOPs are contained in a June 28, 1989, rule addressing Federal enforceability (54 FR 27274). As such, EPA finds the modifications to 35 Ill. Adm. Code Section 201.162 acceptable.

Granting FESOP permits for no longer than ten years will not affect implementation of air pollution control programs or enforcement of air quality standards in the State of Illinois. Sources must comply with all applicable requirements of the Act regardless of the length of a FESOP's term or the timing of its issuance. FESOPs generally contain limits on the operations of the plant, e.g., materials used and hours of operation, which effectively restrict the source's potential to emit. Illinois' FESOP program requires the permits to undergo public notice and be subject to public comment. A FESOP does not impact any previously or newly applicable substantive requirements of the Act, such as new maximum achievable control technology standards under Section 112. Such provisions remain independently enforceable. Similarly, FESOP holders will still need to meet all applicable requirements under the Act, including those related to new construction. As such, an extension of FESOP initial or renewal terms from five to ten years does not delay the obligation of a source to comply with all applicable requirements.

We are publishing this action without prior proposal because we view this as a noncontroversial amendment and anticipate no adverse comments. However, in the proposed rules section of this **Federal Register** publication, we are publishing a separate document that will serve as the proposal to approve the state plan if relevant adverse written comments are filed. This rule will be effective June 6, 2014 without further notice unless we receive relevant adverse written comments by May 7, 2014. If we receive such comments, we will withdraw this action before the effective date by publishing a subsequent document that will withdraw the final action. All public comments received will then be addressed in a subsequent final rule based on the proposed action. EPA will not institute a second comment period. Any parties interested in commenting on this action should do so at this time. If we do not receive any comments, this action will be effective June 6, 2014.

II. Statutory and Executive Order Reviews.

Under the Act, the Administrator is required to approve a SIP submission that complies with the provisions of the Act and applicable Federal regulations. 42 U.S.C. 7410(k); 40 CFR 52.02(a). Thus, in reviewing SIP submissions, EPA's role is to approve state choices, provided that they meet the criteria of the Act. Accordingly, this action merely approves state law as meeting Federal requirements and does not impose additional requirements beyond those imposed by state law. For that reason, this action:

- Is not a ''significant regulatory action'' subject to review by the Office of Management and Budget under Executive Order 12866 (58 FR 51735, October 4, 1993);
- Does not impose an information collection burden under the provisions of the Paperwork Reduction Act (44 U.S.C. 3501 *et seq.*);
- Is certified as not having a significant economic impact on a substantial number of small entities under the Regulatory Flexibility Act (5 U.S.C. 601 *et seq.*);
- Does not contain any unfunded mandate or significantly or uniquely affect small governments, as described in the Unfunded Mandates Reform Act of 1995 (Pub. L. 104–4);
- Does not have Federalism implications as specified in Executive Order 13132 (64 FR 43255, August 10, 1999);
- Is not an economically significant regulatory action based on health or safety risks subject to Executive Order 13045 (62 FR 19885, April 23, 1997);
- Is not a significant regulatory action subject to Executive Order 13211 (66 FR 28355, May 22, 2001);
- Is not subject to requirements of Section 12(d) of the National Technology Transfer and Advancement Act of 1995 (15 U.S.C. 272 note) because application of those requirements would be inconsistent with the Act; and
- Does not provide EPA with the discretionary authority to address, as appropriate, disproportionate human health or environmental effects, using practicable and legally permissible methods, under Executive Order 12898 (59 FR 7629, February 16, 1994).

In addition, this rule does not have tribal implications as specified by Executive Order 13175 (65 FR 67249, November 9, 2000), because the SIP is not approved to apply in Indian country located in the state, and EPA notes that it will not impose substantial direct costs on tribal governments or preempt tribal law.

The Congressional Review Act, 5 U.S.C. 801 *et seq.,* as added by the Small Business Regulatory Enforcement Fairness Act of 1996, generally provides that before a rule may take effect, the agency promulgating the rule must submit a rule report, which includes a copy of the rule, to each House of the Congress and to the Comptroller General of the United States. EPA will submit a report containing this action and other required information to the U.S. Senate, the U.S. House of Representatives, and the Comptroller General of the United States prior to publication of the rule in the **Federal Register**. A major rule cannot take effect until 60 days after it is published in the **Federal Register**. This action is not a ''major rule'' as defined by 5 U.S.C. 804(2).

Under section 307(b)(1) of the Act, petitions for judicial review of this action must be filed in the United States Court of Appeals for the appropriate circuit by June 6, 2014. Filing a petition for reconsideration by the Administrator of this final rule does not affect the finality of this action for the purposes of judicial review nor does it extend the

time within which a petition for judicial review may be filed, and shall not postpone the effectiveness of such rule or action. Parties with objections to this direct final rule are encouraged to file a comment in response to the parallel notice of proposed rulemaking for this action published in the proposed rules section of today's **Federal Register**, rather than file an immediate petition for judicial review of this direct final rule, so that EPA can withdraw this direct final rule and address the comment in the proposed rulemaking. This action may not be challenged later in proceedings to enforce its requirements. (See section 307(b)(2).)

List of Subjects in 40 CFR Part 52

Environmental protection, Air pollution control, Carbon monoxide, Incorporation by reference, Intergovernmental relations, Lead, Nitrogen dioxide, Ozone, Particulate matter, Reporting and recordkeeping requirements, Sulfur oxides, Volatile organic compounds.

Dated: February 24, 2014.

Susan Hedman,

Regional Administrator, Region 5.

40 CFR part 52 is amended as follows:

PART 52—APPROVAL AND PROMULGATION OF IMPLEMENTATION PLANS

■ 1. The authority citation for part 52 continues to read as follows:

Authority: 42 U.S.C. 7401 *et seq.*

Subpart O—Illinois

■ 2. Section 52.720 is amended by adding paragraph (c)(198) to read as follows:

§ 52.720 Identification of plan.

* * * * *

(c) * * *

(198) On January 9, 2014, Illinois submitted modifications to its Federally Enforceable State Operating Permits rules as a revision to the state implementation plan. The revision extends the maximum permit term of Federally Enforceable State Operating Permits from five years to ten years.

(i) Incorporation by reference. Illinois Administrative Code Title 35: Environmental Protection; Subtitle B: Air Pollution; Chapter I: Pollution Control Board; Subchapter a: Permits and General Provisions; Part 201: Permits and General Provisions; Subpart D: Permit Applications and Review Process; Section 201.162: Duration; Subsection 201.162(a). Effective December 1, 2010.

[FR Doc. 2014–07560 Filed 4–4–14; 8:45 am]

BILLING CODE 6560–50–P

ENVIRONMENTAL PROTECTION AGENCY

40 CFR Part 52

[EPA–R05–OAR–2009–0805; FRL–9908–70–Region 5]

Approval of Air Quality Implementation Plans; Indiana; Ohio; ''Infrastructure'' SIP State Board Requirements for the 2006 24-Hour $PM_{2.5}$ NAAQS

AGENCY: Environmental Protection Agency (EPA).

ACTION: Final rule.

SUMMARY: Pursuant to its authority under the Clean Air Act (CAA), the Environmental Protection Agency (EPA) is taking final action to approve elements of state implementation plan (SIP) submissions by the Indiana Department of Environmental Management (IDEM) and the Ohio Environmental Protection Agency (Ohio EPA) to address the section 110 requirements of the CAA for the 2006 24-hour fine particle National Ambient Air Quality Standards (2006 $PM_{2.5}$ NAAQS). The SIPs under section 110 of the CAA are often referred to as the ''infrastructure'' SIP, and specifically we are finalizing approval of portions of these states' submissions intended to meet the applicable state board requirements obligated by section 128 of the CAA. The proposed rule associated with this final action was published on February 7, 2014, and we received no comments.

DATES: This final rule is effective on May 7, 2014.

ADDRESSES: EPA has established a docket for this action under Docket ID No. EPA–R05–OAR–2009–0805. All documents in the docket are listed in the *www.regulations.gov* index. Although listed in the index, some information is not publicly available, e.g., Confidential Business Information or other information whose disclosure is restricted by statute. Certain other material, such as copyrighted material, will be publicly-available only in hard copy. Publicly-available docket materials are available either electronically in *www.regulations.gov* or in hard copy at the U.S. Environmental Protection Agency, Region 5, Air and Radiation Division, 77 West Jackson Boulevard, Chicago, Illinois 60604. This facility is open from 8:30 a.m. to 4:30 p.m., Monday through Friday, excluding Federal holidays. We recommend that you telephone Andy Chang at (312) 886–0258 before visiting the Region 5 office.

FOR FURTHER INFORMATION CONTACT: Andy Chang, Environmental Engineer, Attainment Planning and Maintenance Section, Air Programs Branch (AR–18J), U.S. Environmental Protection Agency, Region 5, 77 West Jackson Boulevard, Chicago, Illinois 60604, (312) 886–0258, *chang.andy@epa.gov.*

SUPPLEMENTARY INFORMATION: Throughout this document whenever ''we,'' ''us,'' or ''our'' is used, we mean EPA. This supplementary information section is arranged as follows:

I. What is the background for this action?
II. What action is EPA taking?
III. Statutory and Executive Order Reviews

I. What is the background for this action?

Under sections 110(a)(1) and (2) of the CAA, and implementing EPA policy, states are required to submit to EPA infrastructure SIPs to ensure that their SIPs provide for implementation, maintenance, and enforcement of the NAAQS, including the 2006 $PM_{2.5}$ NAAQS. These submissions must contain any revisions needed for meeting the applicable SIP requirements of section 110(a)(2), or certifications that their existing SIPs already met those requirements.

EPA highlighted this statutory requirement in an October 2, 2007, guidance document entitled ''Guidance on SIP Elements Required Under Sections 110(a)(1) and (2) for the 1997 8-hour Ozone and $PM_{2.5}$ National Ambient Air Quality Standards'' (2007 Memo). On September 25, 2009, EPA issued additional guidance pertaining to the 2006 $PM_{2.5}$ NAAQS entitled ''Guidance on SIP Elements Required Under Sections 110(a)(1) and (2) for the 2006 24-Hour Fine Particle ($PM_{2.5}$) National Ambient Air Quality Standards (NAAQS)'' (2009 Memo).

On October 29, 2012, EPA finalized its approval of the majority of the infrastructure SIP elements for Indiana and Ohio with respect to the 2006 $PM_{2.5}$ NAAQS (*see* 77 FR 65478). However, we took no action on the state board requirements of section 110(a)(2)(E)(ii); instead, we committed to address compliance with these requirements at a later time (*see* 77 FR 65478 at 75480). EPA's February 7, 2014, proposed rulemaking and today's final action fulfill that commitment.

To assist states with addressing the state board requirements of section 110(a)(2)(E)(ii), EPA issued ''Guidance on Infrastructure SIP Elements Required

Under Sections 110(a)(1) and (2) for the 2008 Lead (Pb) National Ambient Air Quality Standards (NAAQS)'' (2011 Memo) and most recently, ''Guidance on Infrastructure SIP Elements Under Clean Air Act Sections 110(a)(1) and 110(a)(2)'' (2013 Memo). Notably, the 2013 Memo specifies that the state board requirements are not NAAQS specific, i.e., the requirements are identical for each NAAQS. EPA's February 7, 2014, proposed rulemaking (*see* 79 FR 7410) detailed how Indiana and Ohio have met the applicable requirements of section 110(a)(2)(E)(ii), and no comments were received regarding the proposal to approve these states' satisfaction of those requirements.

II. What action is EPA taking?

For the reasons discussed in our February 7, 2014, proposed rulemaking, EPA is taking final action to approve submissions from IDEM and Ohio as meeting the state board requirements under section 110(a)(2)(E)(ii) for the 2006 $PM_{2.5}$ NAAQS. To reiterate, this action does not extend to any other NAAQS, nor does it extend to any other element under section 110(a)(1) and (2) for the 2006 $PM_{2.5}$ NAAQS.

III. Statutory and Executive Order Reviews

Under the CAA, the Administrator is required to approve a SIP submission that complies with the provisions of the CAA and applicable Federal regulations. 42 U.S.C. 7410(k); 40 CFR 52.02(a). Thus, in reviewing SIP submissions, EPA's role is to approve state choices, provided that they meet the criteria of the CAA. Accordingly, this action merely approves state law as meeting Federal requirements and does not impose additional requirements beyond those imposed by state law. For that reason, this action:

- Is not a ''significant regulatory action'' subject to review by the Office of Management and Budget under Executive Order 12866 (58 FR 51735, October 4, 1993);
- does not impose an information collection burden under the provisions of the Paperwork Reduction Act (44 U.S.C. 3501 *et seq.*);
- is certified as not having a significant economic impact on a substantial number of small entities under the Regulatory Flexibility Act (5 U.S.C. 601 *et seq.*);
- does not contain any unfunded mandate or significantly or uniquely affect small governments, as described in the Unfunded Mandates Reform Act of 1995 (Pub. L. 104–4);
- does not have Federalism implications as specified in Executive Order 13132 (64 FR 43255, August 10, 1999);
- is not an economically significant regulatory action based on health or safety risks subject to Executive Order 13045 (62 FR 19885, April 23, 1997);
- is not a significant regulatory action subject to Executive Order 13211 (66 FR 28355, May 22, 2001);
- is not subject to requirements of Section 12(d) of the National Technology Transfer and Advancement Act of 1995 (15 U.S.C. 272 note) because application of those requirements would be inconsistent with the CAA; and
- does not provide EPA with the discretionary authority to address, as appropriate, disproportionate human health or environmental effects, using practicable and legally permissible methods, under Executive Order 12898 (59 FR 7629, February 16, 1994).

In addition, this rule does not have Tribal implications as specified by Executive Order 13175 (65 FR 67249, November 9, 2000), because the SIP is not approved to apply in Indian country located in the state, and EPA notes that it will not impose substantial direct costs on Tribal governments or preempt Tribal law.

The Congressional Review Act, 5 U.S.C. 801 *et seq.,* as added by the Small Business Regulatory Enforcement Fairness Act of 1996, generally provides that before a rule may take effect, the agency promulgating the rule must submit a rule report, which includes a copy of the rule, to each House of the Congress and to the Comptroller General of the United States. EPA will submit a report containing this action and other required information to the U.S. Senate, the U.S. House of Representatives, and the Comptroller General of the United States prior to publication of the rule in the **Federal Register**. A major rule cannot take effect until 60 days after it is published in the **Federal Register**. This action is not a ''major rule'' as defined by 5 U.S.C. 804(2).

Under section 307(b)(1) of the CAA, petitions for judicial review of this action must be filed in the United States Court of Appeals for the appropriate circuit by June 6, 2014. Filing a petition for reconsideration by the Administrator of this final rule does not affect the finality of this action for the purposes of judicial review nor does it extend the time within which a petition for judicial review may be filed, and shall not postpone the effectiveness of such rule or action. Parties with objections to this direct final rule are encouraged to file a comment in response to the parallel notice of proposed rulemaking for this action published in the Proposed Rules section of today's **Federal Register**, rather than file an immediate petition for judicial review of this direct final rule, so that EPA can withdraw this direct final rule and address the comment in the proposed rulemaking. This action may not be challenged later in proceedings to enforce its requirements. (See section 307(b)(2).)

List of Subjects in 40 CFR Part 52

Environmental protection, Air pollution control, Incorporation by reference, Intergovernmental relations, Particulate matter, Reporting and recordkeeping requirements.

Dated: March 17, 2014.

Susan Hedman,

Regional Administrator, Region 5.

40 CFR part 52 is amended as follows:

PART 52—APPROVAL AND PROMULGATION OF IMPLEMENTATION PLANS

■ 1. The authority citation for part 52 continues to read as follows:

Authority: 42 U.S.C. 7401 *et seq.*

■ 2. In § 52.770 the table in paragraph (e) is amended by revising the entry for ''Section 110(a)(2) Infrastructure Requirements for the 2006 24-Hour $PM_{2.5}$ NAAQS''.

The revised text reads as follows:

§ 52.770 Identification of plan.

* * * * *

(e) * * *

EPA-APPROVED INDIANA NONREGULATORY AND QUASI-REGULATORY PROVISIONS

Title	Indiana date	EPA Approval	Explanation
* *		* *	* * *
Section 110(a)(2) Infrastructure Requirements for the 2006 24-Hour $PM_{2.5}$ NAAQS.	10/20/2009, 6/25/2012, 7/12/2012	7/10/2013, 78 FR 41311	This action addresses the following CAA elements: 110(a)(2)(A), (B), (C), (D)(i)(II), (D)(ii), (E), (F), (G), (H), (J), (K), (L), and (M). We are finalizing approval of the PSD source impact analysis requirements of section 110(a)(2)(C), (D)(i)(II), and (J), but are not finalizing action on the visibility protection requirements of (D)(i)(II), and the state board requirements of (E)(ii). We will address these requirements in a separate action.
	5/22/2013	4/7/2014, [INSERT PAGE NUMBER WHERE THE DOCUMENT BEGINS].	This action addresses the following CAA elements: State board requirements of section 110(a)(2)(E)(ii).
* *		* *	* * *

■ 3. Section 52.1891 is amended by adding paragraph (d) to read as follows:

§ 52.1891 Section 110(a)(2) infrastructure requirements.

* * * * *

(d) Approval—In a June 7, 2013, submission, Ohio certified that the state has satisfied the infrastructure SIP requirements of section 110(a)(2)(E)(ii) for the 2006 24-hour $PM_{2.5}$ NAAQS.

[FR Doc. 2014–07564 Filed 4–4–14; 8:45 am]

BILLING CODE 6560–50–P

ENVIRONMENTAL PROTECTION AGENCY

40 CFR Part 52

[EPA–R03–OAR–2013–0299; FRL–9909–09–Region–3]

Approval and Promulgation of Air Quality Implementation Plans; West Virginia; Section 110(a)(2) Infrastructure Requirements for the 2008 Ozone National Ambient Air Quality Standards

AGENCY: Environmental Protection Agency (EPA).

ACTION: Final rule.

SUMMARY: The Environmental Protection Agency (EPA) is approving a State Implementation Plan (SIP) revision submitted by the State of West Virginia pursuant to the Clean Air Act (CAA). Whenever new or revised National Ambient Air Quality Standards (NAAQS) are promulgated, the CAA requires states to submit a plan for the implementation, maintenance, and enforcement of such NAAQS. The plan is required to address basic program elements, including, but not limited to regulatory structure, monitoring, modeling, legal authority, and adequate resources necessary to assure attainment and maintenance of the standards. These elements are referred to as infrastructure requirements. The State of West Virginia has made a submittal addressing the infrastructure requirements for the 2008 ozone NAAQS.

DATES: This final rule is effective on May 7, 2014.

ADDRESSES: EPA has established a docket for this action under Docket ID Number EPA–R03–OAR–2013–0299. All documents in the docket are listed in the *www.regulations.gov* Web site. Although listed in the electronic docket, some information is not publicly available, i.e., confidential business information (CBI) or other information whose disclosure is restricted by statute. Certain other material, such as copyrighted material, is not placed on the Internet and will be publicly available only in hard copy form. Publicly available docket materials are available either electronically through *www.regulations.gov* or in hard copy for public inspection during normal business hours at the Air Protection Division, U.S. Environmental Protection Agency, Region III, 1650 Arch Street, Philadelphia, Pennsylvania 19103. Copies of the State submittal are available at the West Virginia Department of Environmental Protection, Division of Air Quality, 601 57th Street SE., Charleston, West Virginia 25304.

FOR FURTHER INFORMATION CONTACT: Ellen Schmitt, (215) 814–5787, or by email at *schmitt.ellen@epa.gov.*

SUPPLEMENTARY INFORMATION:

I. Summary of SIP Revision

On February 17, 2012, the West Virginia Department of Environmental Protection (WV DEP) submitted a SIP revision that addresses the infrastructure elements specified in section 110(a)(2) of the CAA, necessary to implement, maintain, and enforce the 2008 ozone NAAQS. On July 2, 2013 (78 FR 39650), EPA published a notice of proposed rulemaking (NPR) for the State of West Virginia proposing approval of West Virginia's submittal. In the NPR, EPA proposed approval of the following infrastructure elements: Section 110(a)(2)(A), (B), (C), (D), (E), (F), (G), (H), (J), (K), (L), and (M), or portions thereof. EPA has taken separate action on the portions of section 110(a)(2)(C), (D)(i)(II), and (J) as they relate to West Virginia's prevention of significant deterioration (PSD) program and is taking separate action on section 110(a)(2)(E)(ii) as it relates to section 128 (State Boards). West Virginia did not submit section 110(a)(2)(I) which pertains to the nonattainment requirements of part D, Title I of the CAA, since this element is not required to be submitted by the 3-year submission deadline of section 110(a)(1), and will be addressed in a separate process. West Virginia also did not include a component to address section 110(a)(2)(D)(i)(I) as it is not required in accordance with the *EME Homer City* decision from the United States Court of Appeals for the District of Columbia Circuit, until EPA has defined a state's contribution to nonattainment or interference with maintenance in another state. *See EME Homer City Generation, LP* v. *EPA,* 696 F.3d 7 (D.C. Cir. 2012), *cert. granted,* 133 U.S. 2857 (2013). Unless the *EME Homer City* decision is reversed or otherwise modified by the Supreme Court, states such as West Virginia are not required to submit section 110(a)(2)(D)(i)(I) SIPs until the EPA has quantified their obligations under that section. Therefore, a 110(a)(2)(D)(i)(I) submission from West Virginia is not statutorily required at this time. As no such submission was made by the State, there is no 110(a)(2)(D)(i)(I) SIP pending

before the EPA. Thus, in this rulemaking notice, EPA is not taking action with respect to 110(a)(2)(D)(i)(I) for the 2008 ozone NAAQS.

The rationale supporting EPA's proposed rulemaking action, including the scope of infrastructure SIPs in general, is explained in the NPR and the technical support document (TSD) accompanying the NPR and will not be restated here. The TSD is available in the docket for this rulemaking at www.regulations.gov, Docket ID Number EPA–R03–OAR–2013–0299.

II. Public Comments and EPA's Responses

EPA received three sets of comments on the July 2, 2013 proposed approval of West Virginia's 2008 ozone infrastructure SIP. The commenters include the State of Connecticut, the State of Maryland, and the Sierra Club. A full set of these comments is provided in the docket for today's final rulemaking action. As both States and the Sierra Club submitted comments regarding the interstate transport of pollution and the States did not comment on other issues, a summary of the comments dealing with transport and EPA's responses will be addressed first followed by summaries of and responses to the remainder of Sierra Club's comments.

A. ''Interstate Transport'' Comments

Comment 1: The State of Connecticut, the State of Maryland, and the Sierra Club (the commenters) assert that the ability of downwind states to attain the 2008 ozone NAAQS is substantially compromised by interstate transport of pollution from upwind states. The States comment that they have done their share to reduce in-state emissions, and EPA should ensure each state fully addresses its contribution to any other state's ozone nonattainment. The commenters state that section 110(a)(1) of the CAA requires states like West Virginia to submit, within three years of promulgation of a new NAAQS, an infrastructure SIP which provides for implementation, maintenance, and enforcement of such NAAQS within the state. The commenters remark that West Virginia was required to submit a complete SIP that demonstrated compliance with the good neighbor provision of section 110(a)(2)(D)(i)(I) of the CAA. Maryland also states that EPA must disapprove the infrastructure submittal for element 110(a)(2)(D)(i)(I) as West Virginia made no submittal for that element. Maryland also argues that if EPA believes *EME Homer City* prohibits it from disapproving the 110(a)(2)(D)(i)(I) portion of the West Virginia SIP before the state's significant contribution level is established, then EPA should immediately promulgate such a level. Sierra Club, in turn, states that EPA must disapprove West Virginia's SIP submission for failure to comply with 110(a)(2)(D)(i)(I). Sierra Club and Maryland both argue that EPA cannot rely on the D.C. Circuit decision in *EME Homer City Generation* v. *EPA,* 696 F.3d 7 (D.C. Cir. 2012) as an excuse to ignore obligations established by the Clean Air Act. Sierra Club suggests the relevant language in *EME Homer City* is dicta and that as this rulemaking action would be appealed to the Fourth Circuit, and EPA is under no obligation to follow that dicta.

Connecticut and Sierra Club state that EPA must make a finding under section 110(k) of the CAA that West Virginia failed to submit the required SIP elements to address section 110(a)(2)(D)(i)(I) of the CAA. Connecticut states that under section 110(c)(1) of the CAA such a finding creates a two year deadline for EPA to promulgate a Federal Implementation Plan (FIP). In addition, Connecticut and Maryland state that the CAA does not give EPA discretion to approve a SIP without the good neighbor provision on the grounds that EPA would take separate action to address West Virginia's 110(a)(2)(D)(i)(I) obligations. They assert that a FIP is the only separate action available to EPA under the CAA to address a state's failure to satisfy the requirements of 110(a)(2)(D)(i)(I). Sierra Club states that EPA must issue a FIP within two years of disapproval of West Virginia's SIP under section 110(c)(1)(A) of the CAA.

Response 1: In this rulemaking action, EPA is not taking any final action with respect to the provisions in section 110(a)(2)(D)(i)(I)—the portion of the good neighbor provision which addresses emissions that significantly contribute to nonattainment or interfere with maintenance of the NAAQS in another state. West Virginia did not make a SIP submission to address the requirements of section 110(a)(2)(D)(i)(I) and thus there is no such submission upon which EPA could take action under section 110(k) of the CAA. EPA could not, as Maryland urges, act under section 110(k) to disapprove a SIP submission that has not been submitted to EPA. In addition, EPA could not, at this time, find that West Virginia has failed to submit a required SIP element for 110(a)(2)(D)(i)(I) as the D.C. Circuit in *EME Homer City* has held no such obligation to submit exists until EPA defines a state's obligations under 110(a)(2)(D)(i)(I). EPA also disagrees with the commenters that EPA cannot approve a SIP without the good neighbor provision and believes there is no basis for the contention that EPA must issue a FIP within two years, as EPA has neither disapproved, nor found that West Virginia failed to submit a required 110(a)(2)(D)(i)(I) SIP submission.

EPA acknowledges the commenters' concern that interstate transport of ozone and ozone precursors from upwind states to downwind states may have adverse consequences on the ability of downwind areas to attain the NAAQS in a timely fashion. EPA also agrees in general with the commenters that each state should address its contribution to another state's nonattainment and that section 110(a)(1) of the CAA requires states like West Virginia to submit, within three years of promulgation of a new or revised NAAQS, a plan which provides for implementation, maintenance and enforcement of such NAAQS within the state. Similarly, EPA has interpreted the CAA as providing that any finding by EPA that a state has failed to make such a submission would trigger an obligation for EPA to promulgate a FIP within two years if the state did not submit and EPA approve a SIP to correct the deficiency before EPA promulgates a FIP. However, as discussed further in this response, while EPA continues to agree that the plain language of the statute establishes these obligations, unless the D.C. Circuit decision in *EME Homer City* is reversed or modified by the Supreme Court, EPA intends to act in accordance with that opinion. In that opinion, the D.C. Circuit held that a 110(a)(2)(D)(i)(I) SIP to address emissions that significantly contribute to nonattainment or interfere with maintenance of the NAAQS in another state is not due until EPA has defined the state's obligations under that section of the CAA. Thus, at this time, West Virginia has no obligation to make a 110(a)(2)(D)(i)(I) SIP submittal and EPA has no obligation to issue a FIP.

As mentioned previously, EPA has historically interpreted the CAA as requiring states to submit SIPs addressing the requirements of section 110(a)(2)(D)(i)(I) of the CAA within three years of the promulgation or revision of a NAAQS. However, the U.S. Court of Appeals for the District of Columbia Circuit clearly articulated in its opinion in *EME Homer City* that SIPs under section 110(a)(2)(D)(i)(I) of the CAA are not due until EPA has defined a state's significant contribution to nonattainment or interference with maintenance in another state. *See EME Homer City,* 696 F.3d 7. EPA has not yet done this for the 2008 ozone NAAQS.

While the Supreme Court has agreed to review the *EME Homer City* decision, the D.C. Circuit's decision currently remains in place. EPA intends to act in accordance with the *EME Homer City* opinion unless it is reversed or otherwise modified by the Supreme Court. Therefore, in this rulemaking action, EPA is not taking any final action with respect to the provisions in section 110(a)(2)(D)(i)(I).[1]

EPA disagrees with the commenters' argument that EPA cannot approve a SIP without the good neighbor provision. Section 110(k)(3) of the CAA authorizes EPA to approve a plan in full, disapprove it in full, or approve it in part and disapprove it in part, depending on the extent to which such plan meets the requirements of the CAA. This authority to approve state SIP revisions in separable parts was included in the 1990 Amendments to the CAA to overrule a decision in the Court of Appeals for the Ninth Circuit holding that EPA could not approve individual measures in a plan submission without either approving or disapproving the plan as a whole. *See* S. Rep. No. 101–228, at 22, 1990 U.S.C.C.A.N. 3385, 3408 (discussing the express overruling of *Abramowitz* v. *EPA,* 832 F.2d 1071 (9th Cir. 1987)).

EPA further disagrees with commenters' suggestions that the Agency need not follow the D.C. Circuit opinion in *EME Homer City.* EPA intends to act in accordance with the D.C. Circuit opinion in *EME Homer City* unless it is reversed or otherwise modified by the Supreme Court. In addition, because the EPA rule known as the Cross State Air Pollution Rule (CSAPR) reviewed by the court in *EME Homer City* was designated by EPA as a ''nationally applicable'' rule within the meaning of CAA section 307(b)(1) with petitions for review of CSAPR required to be filed in the D.C. Circuit, EPA accordingly believes the D.C. Circuit's decision in *EME Homer City* is also nationally applicable. As such, EPA does not intend to take any actions, even if they are only reviewable in another federal Circuit Court of Appeals, which are inconsistent with the decision of the D.C. Circuit. EPA also finds no basis for one commenter's suggestion that the relevant portion of the D.C. Circuit opinion in *EME Homer City* opinion is dicta.

EPA interprets its authority under section 110(k)(3) of the CAA, as affording EPA the discretion to approve or conditionally approve individual elements of West Virginia's infrastructure submission for the 2008 eight-hour ozone NAAQS, separate and apart from any action with respect to the requirements of section 110(a)(2)(D)(i)(I) of the CAA with respect to that NAAQS. EPA views discrete infrastructure SIP requirements, such as the requirements of 110(a)(2)(D)(i)(I), as severable from the other infrastructure elements and interprets section 110(k)(3) as allowing it to act on individual severable measures in a plan submission. In short, EPA believes that even if West Virginia had made a SIP submission for section 110(a)(2)(D)(i)(I) of the CAA, which it has not, EPA would still have discretion under section 110(k) of the CAA to act upon the various individual elements of the state's infrastructure SIP submission, separately or together, as appropriate. The commenters raise no compelling legal or environmental rationale for an alternate interpretation.

EPA disagrees with the comment from Connecticut and Maryland regarding EPA's statement indicating an intent to take separate action on West Virginia's 110(a)(2)(D)(i)(I) obligations and that a FIP must be issued within two years. In the rulemaking action which proposed approval of portions of West Virginia's infrastructure SIP for the 2008 ozone NAAQS, EPA stated that its proposed action did not include *any* proposed action on section 110(a)(2)(D)(i)(I) of the CAA for West Virginia's February 17, 2012 infrastructure SIP submission because this element was not required until EPA quantified the state's obligations pursuant to the *EME Homer City* opinion. *See* (78 FR 39650, July 2, 2013). As EPA has neither disapproved, nor found that West Virginia failed to submit a required 110(a)(2)(D)(i)(I) SIP submission, there is consequently no basis for any contention that EPA must issue a FIP within two years. Moreover, the D.C. Circuit clearly held in *EME Homer City* that even where EPA had issued findings of failure to submit 110(a)(2)(D)(i)(I) SIPs and/or disapproved such SIPs, EPA lacked authority to promulgate FIPs under 110(c)(1) of the CAA where it had not previously quantified states' good neighbor obligations. *EME Homer City,* 696 F.3d at 31–37. And, as explained earlier in this rulemaking action, EPA intends to comply with that decision unless it is reversed or otherwise modified by the Supreme Court. *See also* (78 FR 14681, 16843, March 7, 2013) (concluding that, under the D.C. Circuit opinion in *EME Homer City,* disapproval of a 110(a)(2)(D)(i)(I) SIP submitted by Kentucky did not start a FIP clock).

In sum, the concerns raised by the commenters do not establish that it is inappropriate or unreasonable for EPA to approve the portions of West Virginia's February 17, 2012 infrastructure SIP submission for the 2008 ozone NAAQS. As discussed above, EPA has no obligation to find West Virginia failed to satisfy its good neighbor obligations and no action is required at this time. Moreover, EPA notes that it is actively working with state partners to assess next steps to address air pollution that crosses state boundaries and has begun work on a rulemaking to address transported air pollution affecting the ability of states in the eastern half of the United States to attain and maintain the 2008 ozone NAAQS, including defining certain states' obligations under 110(a)(2)(D)(i)(I). That rulemaking action is separate from this SIP approval action. It is also technically complex and must comply with the rulemaking requirements of section 307(d) of the CAA.

B. Sierra Club Comments

Sierra Club makes several additional comments which are provided in the docket for today's final rulemaking action and summarized below with EPA's response to each.

Comment 2: Sierra Club contends that EPA must disapprove West Virginia's 2008 eight-hour ozone infrastructure SIP revision with regard to the visibility components of section 110(a)(2)(D)(i)(II) and (J) of the CAA since West Virginia's Regional Haze SIP relies on visibility improvements from implementing the Clean Air Interstate Rule (CAIR). The commenter asserts that CAIR is not permanent and enforceable and they reference litigation in the D.C. Circuit related to CAIR. *See North Carolina* v. *EPA,* 531 F.3d 896, *on rehearing,* 550 F.3d 1176 (D.C. Cir. 2008). The commenter also cites to EPA statements in rulemaking actions on SIPs, such as attainment SIPs and maintenance SIPs, where EPA stated CAIR reductions were not permanent reductions. The commenter states that EPA could not rely on CAIR, even if permanent and enforceable, to support its proposed

[1] On January 15, 2013, EPA published findings of failure to submit with respect to the infrastructure SIP requirements for the 2008 ozone NAAQS. *See* 78 FR 2882. In that rulemaking action, EPA explained why it was not issuing any findings of failure to submit with respect to section 110(a)(2)(D)(i)(I). *Id.* at 2884–85. In that rulemaking action, EPA explained the opinion of the D.C. Circuit in *EME Homer City* concluded that a ''SIP cannot be deemed to lack a required submission or deemed deficient for failure to meet the 110(a)(2)(D)(i)(I) obligation until after EPA quantifies the obligation.'' *See* 78 FR at 2884–85; *see also EME Homer City,* 696 F.3d at 32. Therefore, under *EME Homer City,* states like West Virginia have no obligation to make a SIP submission to address section 110(a)(2)(D)(i)(I) for the 2008 ozone NAAQS until EPA has first defined the state's obligations.

approval of the visibility components in section 110(a)(2)(D)(i)(II) and (J) of the CAA for West Virginia's 2008 eight-hour ozone infrastructure SIP revision. The commenter asserts that the substitution of CAIR for best available retrofit technology (BART) for electric generating units (EGUs) violates the CAA including section 169A. The commenter includes comments challenging EPA's prior rulemakings that CAIR was ''better than BART'' because such exemption from BART does not meet the requirements of CAA section 169A(c) or 169A(b)(2)(A). The commenter states that CAIR as a substitute for BART for EGUs would result in the EGU sources having less stringent controls on emissions than would result from application of source-by-source BART.

Response 2: EPA disagrees with the commenter that West Virginia's infrastructure SIP does not meet the requirements for visibility protection in section 110(a)(2)(D)(i)(II) and (J) of the CAA. As explained in detail in EPA's proposed rulemaking related to today's rulemaking action, EPA believes that in light of the D.C. Circuit's decision to vacate CSAPR, also known as the Transport Rule (*see EME Homer City,* 696 F.3d 7), and the court's order for EPA to ''continue administering CAIR pending the promulgation of a valid replacement,'' it is appropriate for EPA to rely at this time on CAIR to support approval of West Virginia's 2008 eight-hour ozone infrastructure revision, including as it relates to visibility. Based on the current direction from the court to continue administering CAIR, EPA believes that it is appropriate to rely on CAIR emission reductions for purposes of assessing the adequacy of West Virginia's infrastructure SIP revision with respect to prong 4 of section 110(a)(2)(D)(i)(II) while a valid replacement rule is developed and until submissions complying with any such new rule are submitted by the states and acted upon by EPA or until the *EME Homer City* case is resolved in a way that provides different direction regarding CAIR and CSAPR.

Furthermore, as neither the State of West Virginia nor EPA has taken any action to remove CAIR from the West Virginia SIP, CAIR remains part of the federally-approved SIP and can be considered in determining whether the SIP as a whole meets the requirement of prong 4 of 110(a)(2)(D)(i)(II). EPA is taking final rulemaking action to approve the infrastructure SIP submission with respect to prong 4 because West Virginia's Regional Haze SIP, which EPA has approved (*see* (77 FR 16937, March 23, 2012)), in combination with its SIP provisions to implement CAIR adequately prevents sources in West Virginia from interfering with measures adopted by other states to protect visibility during the first planning period as also described in detail in the TSD which accompanied the NPR.[2]

EPA disagrees with the commenter that the CAA does not allow states to rely on an alternative program such as CAIR in lieu of source-specific BART. EPA's regulations allowing states to adopt alternatives to BART that provide for greater reasonable progress, and EPA's determination that states may rely on CAIR to meet the BART requirements, have been upheld by the D.C. Circuit as meeting the requirements of the CAA. In the first case challenging the provisions in the regional haze rule (40 CFR 51.308) allowing for states to adopt alternative programs in lieu of BART, the court affirmed our interpretation of section 169A(b)(2) of the CAA as allowing for alternatives to BART where those alternatives will result in greater reasonable progress than BART. *Center for Energy and Economic Development* v. *EPA,* 398 F.3d 653, 660 (D.C. Cir. 2005) (finding reasonable the EPA's interpretation of section 169A(b)(2) of the CAA as requiring BART only as necessary to make reasonable progress). In the second case, *Utility Air Regulatory Group* v. *EPA,* 471 F.3d 1333 (D.C. Cir. 2006), the court specifically upheld our determination that states could rely on CAIR as an alternative program to BART for EGUs in the CAIR-affected states. The court concluded that the EPA's two-pronged test for determining whether an alternative program achieves greater reasonable progress was a reasonable one and also agreed with EPA that nothing in the CAA required the EPA to ''impose a separate technology mandate for sources whose emissions affect Class I areas, rather than piggy-backing on solutions devised under other statutory categories, where such solutions meet the statutory requirements.'' *Id.* at 1340.

EPA also notes that CAIR has not been ''vacated'' as stated in Sierra Club's comment. As mentioned in EPA's TSD, CAIR was ultimately remanded by the D.C. Circuit to EPA without vacatur, and EPA continues to implement CAIR. EPA further notes that all of the rulemaking actions and proposed rulemaking actions cited by the commenter which discussed limited approvability of SIPs or redesignations due to the status of CAIR were issued by EPA prior to the vacatur of CSAPR when EPA was implementing CSAPR. Since the vacatur of CSAPR in August 2012 and with continued implementation of CAIR per the direction of the DC Circuit in *EME Homer City,* EPA has approved redesignations of areas to attainment of the 1997 fine particulate matter ($PM_{2.5}$) NAAQS in which states have relied on CAIR as an enforceable measure. *See* 77 FR 76415, December 28, 2012 (redesignation of Huntingdon-Ashland, West Virginia for 1997 $PM_{2.5}$ NAAQS which was proposed in 77 FR 68076, November 15, 2012); 78 FR 59841, September 30, 2013 (redesignation of Wheeling, West Virginia for 1997 $PM_{2.5}$ NAAQS which was proposed in 77 FR 73575, December 11, 2012); and 78 FR 56168, September 12, 2013 (redesignation of Parkersburg, West Virginia for 1997 $PM_{2.5}$ NAAQS which was proposed in 77 FR 73560, December 11, 2012).

More fundamentally, we disagree with the commenter that the adequacy of the BART measures in the West Virginia Regional Haze SIP is relevant to the question of whether the State's SIP meets the requirements of section 110(a)(2)(D)(i) of the CAA with respect to visibility. EPA interprets the visibility provisions in this section of the CAA as requiring states to include in their SIPs measures to prohibit emissions that would interfere with the reasonable progress goals set to protect Class I areas in other states. The regional haze rule includes a similar requirement at 40 CFR 51.308(d)(3). We note that on March 23, 2012, EPA determined that West Virginia's Regional Haze SIP adequately prevents sources in West Virginia from interfering with the reasonable progress goals adopted by other states to protect visibility during the first planning period. *See* 77 FR 16937. *See also* 76 FR 41158, 41175–41176 (proposing approval of West Virginia Regional Haze SIP). As EPA's review of the West Virginia Regional Haze SIP explains, the State relied on CAIR to achieve significant reductions in emissions to both meet the BART requirements and to address impacts of West Virginia on Class I areas in other

[2] Under sections 301(a) and 110(k)(6) of the CAA and EPA's long-standing guidance, a limited approval results in approval of the entire SIP submittal, even of those parts that are deficient and prevent EPA from granting a full approval of the SIP revision. *Processing of State Implementation Plan (SIP) Revisions,* EPA Memorandum from John Calcagni, Director, Air Quality Management Division, OAQPS, to Air Division Directors, EPA Regional Offices I–X, September 7, 1992, (1992 Calcagni Memorandum) located at *http://www.epa.gov/ttn/caaa/t1/memoranda/siproc.pdf.* Therefore, EPA believes it is appropriate to approve West Virginia's 2008 ozone NAAQS infrastructure SIP for section 110(a)(2)(D)(i)(II) as it meets the requirements of that section despite the limited approval status of West Virginia's regional haze SIP.

states. The question of whether or not CAIR satisfies the BART requirements has no bearing on whether these measures meet the requirements of section 110(a)(2)(D)(i)(II) of the CAA with respect to visibility. We also note that while the adequacy of the BART provisions in the West Virginia Regional Haze SIP is irrelevant to the question of whether the plan meets the requirements of section 110(a)(2)(D)(i)(II) of the CAA, CAIR was upheld as an alternative to BART in accordance with the requirements of Section 169A of the CAA by the DC Circuit in *Utility Air Regulatory Group* v. *EPA.*

In addition, with regard to the visibility protection aspect of section 110(a)(2)(J), as discussed in the TSD accompanying the NPR for this rulemaking action, EPA stated that it recognizes that states are subject to visibility and regional haze program requirements under part C of the CAA. In the establishment of a new NAAQS such as the 2008 ozone NAAQS, however, the visibility and regional haze program requirements under part C of Title I of the CAA do not change and there are no applicable visibility obligations under part C ''triggered'' under section 110(a)(2)(J) when a new NAAQS becomes effective. Therefore, EPA appropriately proposed approval of West Virginia's 2008 ozone infrastructure SIP revision for section 110(a)(2)(J). As discussed for section 110(a)(2)(D)(i)(II) earlier in this rulemaking action and in the TSD for this rulemaking action, West Virginia has submitted SIP revisions to satisfy the requirements of part C of Title I of the CAA.[3]

In summary, EPA believes that it appropriately proposed approval of West Virginia's infrastructure SIP revision for the 2008 ozone NAAQS for the structural visibility protection requirements in 110(a)(2)(D)(i)(II).

Comment 3: Sierra Club states that EPA must disapprove West Virginia's 2008 eight-hour ozone infrastructure SIP revision for elements 110(a)(2)(D)(i)(II) and (J) of the CAA because the commenter asserts that West Virginia had failed to submit a five-year progress report on its implementation of West Virginia's Regional Haze SIP and also because EPA had not yet approved West Virginia's five-year progress report for regional haze. Sierra Club referenced a July 18, 2008 SIP submittal from West Virginia for regional haze as the basis for determining when the five-year progress report for West Virginia was due.

Response 3: EPA disagrees with the commenter that West Virginia's five-year progress report was not submitted at the time EPA proposed to approve West Virginia's infrastructure SIP for the 2008 ozone NAAQS on July 2, 2013. West Virginia submitted on April 30, 2013, as a SIP revision, its five-year progress report of its approved regional haze, to meet the progress report requirements in 40 CFR 51.308(g). The provisions under 40 CFR 51.308(g) impose a regulatory requirement for an evaluation of West Virginia's progress towards meeting its reasonable progress goals for Class I Federal areas located within West Virginia and in Class I Federal areas outside West Virginia which may be affected by emissions from inside West Virginia. EPA found West Virginia's April 30, 2013 progress report SIP submittal complete on June 13, 2013. EPA has taken action proposing approval on the SIP revision. *See* 79 FR 14460, March 14, 2014. EPA disagrees with the commenter that EPA's approval of West Virginia's five-year progress report is a required structural element necessary before EPA may approve West Virginia's infrastructure SIP for element 110(a)(2)(D)(i)(II).

Nevertheless, from EPA's review of data provided by West Virginia in its five-year progress report, including EPA's review of emissions data from 2008 through 2011 on West Virginia EGUs from EPA's Clean Air Markets Division (CAMD) as provided by the State, emissions of sulfur dioxide (SO_2), the primary contributor to visibility impairment in the Visibility Improvement State and Tribal Association of the Southeast (VISTAS) region, have declined significantly in the State since the West Virginia Regional Haze SIP was submitted to EPA on June 18, 2008. Specifically, West Virginia's five-year progress report notes that in the EGU sector, EPA's CAMD data for 2010 and 2011 shows EGU SO_2 emissions in West Virginia are significantly below even what was predicted for 2018. EPA's review of visibility data from West Virginia in its five-year progress report also shows Class I areas impacted by sources within West Virginia are all meeting or below their reasonable progress goals. In addition, based on EPA's review of the West Virginia five-year progress report, EPA has no reason to question the accuracy of West Virginia's negative declaration to EPA pursuant to 40 CFR 51.308(h) that no revision to West Virginia's Regional Haze SIP is needed at this time to achieve established goals for visibility improvement and emissions reductions. Therefore, based upon EPA's review of the relevant visibility data, emissions data, and modeling results provided by West Virginia in the five-year progress report and upon the analysis provided in the TSD which accompanied the NPR for this rulemaking action, EPA continues to believe that the State's existing SIP (including the Regional Haze SIP and CAIR) contains adequate provisions prohibiting sources from emitting visibility impairing pollutants in amounts which would interfere with neighboring states' SIP measures to protect visibility.

Also, as stated previously, the visibility and regional haze program requirements under part C of Title I of the CAA do not change with the establishment of a new NAAQS such as the 2008 ozone NAAQS, and there are no applicable visibility obligations under part C ''triggered'' by section 110(a)(2)(J) when a new NAAQS becomes effective. Given this, West Virginia was under no obligation to address section 110(a)(2)(J) in its 2008 ozone infrastructure SIP.

Comment 4: Sierra Club contends that EPA must disapprove West Virginia's infrastructure SIP revision because the submittal relies on CAIR, considered by Sierra Club as a stopgap measure, for section 110(a)(2)(A) of the CAA, and therefore fails to impose restrictions on ozone sources and to ensure attainment and maintenance of the 2008 NAAQS. Sierra Club contends West Virginia cannot rely upon CAIR as an enforceable emissions limit for 110(a)(2)(A). In addition, Sierra Club suggests that EPA's statements are dismissive of the 2008 ozone NAAQS requiring any more than the less stringent 1997 ozone NAAQS and states that if states do not take any new actions to satisfy the 2008 ozone NAAQS, the 2008 ozone NAAQS will not be met in many areas and states will not attain and maintain the NAAQS. Sierra Club contends EPA must disapprove the West Virginia infrastructure SIP for the 2008 ozone NAAQS because West Virginia failed to adequately ensure attainment and maintenance of the NAAQS.

Sierra Club also states in its background comments that EPA may approve an infrastructure SIP only if EPA finds the SIP meets the requirements of section 110(a)(2) of the CAA and states such SIPs must include emission limitations that result in compliance with the NAAQS. Sierra Club further states in background that for a plan to be adequate, it must demonstrate the measures, rules, and regulations in the SIP are adequate to

[3] The TSD is available in the docket for this rulemaking at www.regulations.gov, Docket ID Number EPA–R03–OAR–2013–0299.

provide for timely attainment and maintenance of the standard and cited to 40 CFR 51.112 for support.

Response 4: EPA disagrees with the commenter that West Virginia cannot rely on CAIR for section 110(a)(2)(A) of the CAA. As discussed previously and as explained in detail in EPA's proposed rulemaking action related to today's rulemaking action, EPA believes that in light of the DC Circuit's decision to vacate CSAPR (s*ee EME Homer City*, 696 F.3d 7), and the court's order for EPA to ''continue administering CAIR pending the promulgation of a valid replacement,'' it is appropriate for EPA to rely at this time on CAIR to support approval of West Virginia's 2008 eight-hour ozone infrastructure revision. EPA has been ordered by the DC Circuit to develop a new rule, and to continue implementing CAIR in the meantime. Unless the Supreme Court reverses or otherwise modifies the DC Circuit's decision on CSAPR in *EME Homer City*, EPA does not intend to act in a manner inconsistent with the decision of the DC Circuit. Based on the current direction from the court to continue administering CAIR, EPA believes that it is appropriate for West Virginia to rely on CAIR's requirements and provisions and is appropriate for EPA to consider CAIR for purposes of assessing the adequacy of West Virginia's infrastructure SIP revision with respect to ensuring attainment and maintenance of the 2008 NAAQS while a valid replacement rule is developed and until submissions complying with any such new rule are submitted by the states and acted upon by EPA or until the *EME Homer City* case is resolved in a way that provides different direction regarding CAIR and CSAPR.

Furthermore, as neither the State of West Virginia nor EPA has taken any action to remove CAIR from the West Virginia SIP, CAIR remains part of the federally-approved SIP and can be considered in determining whether the SIP as a whole meets the requirement for section 110(a)(2)(A) of the CAA. In addition, EPA described in its TSD accompanying the July 2, 2013 NPR proposing approval of portions of the West Virginia 2008 infrastructure SIP for the 2008 ozone NAAQS how West Virginia had adequate provisions in its SIP, including, but not limited to, regulations concerning control measures for nitrogen oxides (NOx) and volatile organic compounds (VOC), such as 45CSR13, 45CSR14, 45CSR19, 45CSR21, and 45CSR29, as enforceable emission limitations and other control measures, means, or techniques as necessary to meet applicable requirements of the CAA.[4] Therefore, EPA disagrees with the commenter that EPA must disapprove the West Virginia infrastructure SIP submittal for element 110(a)(2)(A) as CAIR and the other measures identified in the TSD for 110(a)(2)(A) are enforceable limitations for meeting applicable requirements in the CAA as EPA explained in detail in the TSD.

EPA believes that section 110(a)(2)(A) of the CAA is reasonably interpreted to require states to submit SIPs that reflect the first step in their planning for attaining and maintaining a new or revised NAAQS and that they contain enforceable control measures and a demonstration that the state has the available tools and authority to develop and implement plans to attain and maintain the NAAQS. In light of the structure of the CAA, EPA's long-standing position regarding infrastructure SIPs is that they are general planning SIPs to ensure that the state has adequate resources and authority to implement a NAAQS in general throughout the state and not detailed attainment and maintenance plans for each individual area of the state.

EPA's interpretation that infrastructure SIPs are more general planning SIPs is consistent with the statute as understood in light of its history and structure. When Congress enacted the CAA in 1970, it did not include provisions requiring states and the EPA to label areas as attainment or nonattainment. Rather, states were required to include all areas of the state in ''air quality control regions'' (AQCRs) and section 110 set forth the core substantive planning provisions for these AQCRs. At that time, Congress anticipated that states would be able to address air pollution quickly pursuant to the very general planning provisions in section 110 and could bring all areas into compliance with the NAAQS within five years. Moreover, at that time, section 110(a)(2)(A)(i) specified that the section 110 plan provide for ''attainment'' of the NAAQS and section 110(a)(2)(B) specified that the plan must include ''emission limitations, schedules, and timetables for compliance with such limitations, and such other measures as may be necessary to insure attainment and maintenance [of the NAAQS].'' In 1977, Congress recognized that the existing structure was not sufficient and many areas were still violating the NAAQS. At that time, Congress for the first time added provisions requiring states and EPA to identify whether areas of the state were violating the NAAQS (i.e., were nonattainment) or were meeting the NAAQS (i.e., were attainment) and established specific planning requirements in section 172 for areas not meeting the NAAQS. In 1990, many areas still had air quality not meeting the NAAQS and Congress again amended the CAA and added yet another layer of more prescriptive planning requirements for each of the NAAQS, with the primary provisions for ozone in section 182. At that same time, Congress modified section 110 to remove references to the section 110 SIP providing for attainment, including removing pre-existing section 110(a)(2)(A) in its entirety and renumbering subparagraph (B) as section 110(a)(2)(A). Additionally, Congress replaced the clause ''as may be necessary to insure attainment and maintenance [of the NAAQS]'' with ''as may be necessary or appropriate to meet the applicable requirements of this chapter.'' Thus, the CAA has significantly evolved in the more than 40 years since it was originally enacted. While at one time section 110 of the CAA did provide the only detailed SIP planning provisions for states and specified that such plans must provide for attainment of the NAAQS, under the structure of the current CAA, section 110 is only the initial stepping-stone in the planning process for a specific NAAQS. And, more detailed, later-enacted provisions govern the substantive planning process, including planning for attainment of the NAAQS.

EPA believes that the proper inquiry at this juncture is whether the State has met the basic structural SIP requirements appropriate at the point in time EPA is acting upon the submittal. Moreover, as addressed in EPA's proposed approval for this rulemaking action and mentioned earlier, West Virginia submitted a list of existing emission reduction measures in the SIP that control emissions of VOCs and NOx. West Virginia's SIP revision reflects several provisions that have the ability to reduce ground level ozone and its precursors. The West Virginia SIP relies on measures and programs used to implement previous ozone NAAQS. Because there is no substantive difference between the previous ozone NAAQS and the more recent ozone

[4] The TSD is available at *www.regulations.gov*, Docket ID Number EPA–R03–OAR–2013–0299. While EPA's TSD did not expressly reference CAIR in the discussion of West Virginia's measures addressing 110(a)(2)(A), the omission by EPA was inadvertent as the West Virginia ozone infrastructure SIP submittal included CAIR amongst other measures for section 110(a)(2)(A) and EPA's review included consideration of all the measures West Virginia included in its submission, including CAIR.

NAAQS, other than the level of the standard, the provisions relied on by West Virginia will provide benefits for the new NAAQS; in other words, the measures reduce overall ground-level ozone and its precursors and are not limited to reducing ozone levels to meet one specific NAAQS.

EPA asserts that section 110 of the CAA is only one provision that is part of the complicated structure governing implementation of the NAAQS program under the CAA, as amended in 1990, and it must be interpreted in the context of not only that structure, but also of the historical evolution of that structure. In light of the revisions to section 110 since 1970 and the later-promulgated and more specific planning requirements of the CAA, EPA reasonably interprets the requirement in section 110(a)(2)(A) of the CAA that the plan provide for ''implementation, maintenance and enforcement'' to mean that the infrastructure SIP must contain enforceable emission limits that will aid in attaining and/or maintaining the NAAQS and that the state demonstrate that it has the necessary tools to implement and enforce a NAAQS, such as adequate state personnel and an enforcement program. With regard to the requirement for emission limitations, EPA has interpreted this to mean for purposes of section 110, that the state may rely on measures already in place to address the pollutant at issue or any new control measures that the state may choose to submit. As EPA stated in ''Guidance on Infrastructure State Implementation Plan (SIP) Elements under Clean Air Act Sections 110(a)(1) and 110(a)(2),'' dated September 13, 2013 (Infrastructure SIP Guidance), ''[t]he conceptual purpose of an infrastructure SIP submission is to assure that the air agency's SIP contains the necessary structural requirements for the new or revised NAAQS, whether by establishing that the SIP already contains the necessary provisions, by making a substantive SIP revision to update the SIP, or both. Overall, the infrastructure SIP submission process provides an opportunity . . . to review the basic structural requirements of the air agency's air quality management program in light of each new or revised NAAQS.'' Infrastructure SIP Guidance at p. 2.

The commenter's reliance on 40 CFR 51.112 to support its argument that infrastructure SIPs must contain emission limits adequate to provide for timely attainment and maintenance of the standard is also not supported. As an initial matter, EPA notes this regulatory provision was initially promulgated and ''restructured and consolidated'' prior to the CAA Amendments of 1990, in which Congress removed all references to ''attainment'' in section 110(a)(2)(A). And, it is clear on its face that 40 CFR 51.112 applies to plans specifically designed to attain the NAAQS. EPA interprets these provisions to apply when states are developing ''control strategy'' SIPs such as the detailed attainment and maintenance plans required under other provisions of the CAA, as amended in 1977 and again in 1990, such as section 175A and 182, and not to infrastructure SIPs. In the preamble to EPA's 1986 action ''restructuring and consolidating'' provisions in part 51, EPA stated that the new attainment demonstration provisions in the 1977 Amendments to the CAA were ''beyond the scope'' of the rulemaking. *See* 51 FR 40656, November 7, 1986. It is important to note, however, that EPA's action in 1986 was not to establish new substantive planning requirements, but rather was meant merely to consolidate and restructure provisions that had previously been promulgated. EPA noted that it had already issued guidance addressing the new ''Part D'' attainment planning obligations. *Id.* Also, as to maintenance regulations, EPA expressly stated that it was not making any revisions other than to re-number those provisions. *Id.* at 40657.

Although EPA was explicit that it was not establishing requirements interpreting the provisions of new ''part D'' of the CAA, it is clear that the regulations being restructured and consolidated in the 1986 action on part 51 were intended to address control strategy plans. In the preamble, EPA clearly stated that 40 CFR 51.112 was replacing 40 CFR 51.13 (''Control strategy: SO_X and PM (portion)''), 51.14 (''Control strategy: CO, HC, O_X and NO_2 (portion)''), 51.80 (''Demonstration of attainment: Pb (portion)''), and 51.82 (''Air quality data (portion)''). *Id.* at 40660. Thus, the present-day 40 CFR 51.112 contains consolidated provisions that are focused on control strategy SIPs, and an infrastructure SIP is not such a plan.

Therefore, EPA finds 40 CFR 51.112 inapplicable to its analysis of the West Virginia ozone infrastructure SIP. EPA finds that CAIR and the other measures identified in the TSD for this rulemaking for section 110(a)(2)(A) of the CAA are enforceable limitations and measures for limiting emissions of NO_X and VOC for the 2008 ozone NAAQS.

Comment 5: Sierra Club contends that EPA must disapprove West Virginia's infrastructure SIP revision because it relies on the ''vacated'' rules, CAIR and CSAPR, to meet section 110(a)(2)(F) requirements that ensure source owners and operators install, maintain, and replace monitoring equipment and provide periodic reporting.

Response 5: First, as EPA noted earlier, CAIR has not been ''vacated'' as stated in Sierra Club's comment but was ultimately remanded by the D.C. Circuit to EPA without vacatur, and EPA continues to implement CAIR.[5] Further, EPA notes that (as explained in detail above) as EPA continues to administer CAIR as directed by the D.C. Circuit, EPA believes it is appropriate for West Virginia's infrastructure SIP to rely on CAIR at this time until a new rule is developed. Therefore, as CAIR is enforceable and being implemented, West Virginia can cite to a provision related to CAIR for its submission for addressing section 110(a)(2)(F) requirements.

In addition, as discussed in EPA's TSD, West Virginia's infrastructure SIP submission for the 2008 ozone NAAQS listed numerous SIP provisions (including the provisions related to CAIR as well as regulations 45CSR13, 45CSR14, and 45CSR19) to support that the existing West Virginia SIP ensures source owners and operators install, maintain and replace monitoring equipment, provide periodic reporting and correlate reports with emission standards under the CAA for section 110(a)(2)(F). EPA's TSD addressed how West Virginia's statutory and regulatory provisions provided for these requirements and most of these requirements are not related to CAIR. While 45CSR39 and 45CSR40, which are in the approved West Virginia SIP, address interstate transport of $PM_{2.5}$, NO_X, and ozone and are related to CAIR, these SIP provisions (45CSR39 and 45CSR40) also contain reporting and monitoring requirements (as are required for 110(a)(2)(F)) including references to federal provisions within 40 CFR part 75. Because EPA continues to implement CAIR and because the West Virginia SIP contains several provisions itemized in the TSD for this

[5] As discussed above, since the vacatur of CSAPR in August 2012 and with continued implementation of CAIR per the direction of the D.C. Circuit in *EME Homer City,* EPA has approved redesignations of areas to attainment of the 1997 $PM_{2.5}$ NAAQS in which states have relied on CAIR as an enforceable measure. *See* 77 FR 76415, December 28, 2012 (redesignation of Huntingdon-Ashland, West Virginia for 1997 $PM_{2.5}$ NAAQS which was proposed in 77 FR 68076, November 15, 2012); 78 FR 59841, September 30, 2013 (redesignation of Wheeling, West Virginia for 1997 $PM_{2.5}$ NAAQS which was proposed in 77 FR 73575, December 11, 2012); and 78 FR 56168, September 12, 2013 (redesignation of Parkersburg, West Virginia for 1997 $PM_{2.5}$ NAAQS which was proposed in 77 FR 73560, December 11, 2012).

rulemaking action addressing monitoring and reporting requirements for sources in West Virginia, EPA finds the West Virginia infrastructure SIP for the 2008 ozone NAAQS adequately addressed section 110(a)(2)(F), and EPA is taking final rulemaking action to approve the infrastructure SIP submission with respect to the requirements of section 110(a)(2)(F) of the CAA.

III. Final Action

EPA is approving the following infrastructure elements or portions thereof of West Virginia's SIP revision: Section 110(a)(2)(A), (B), (C), (D), (E), (F), (G), (H), (J), (K), (L), and (M). EPA has taken separate rulemaking action on the portions of section 110(a)(2)(C), (D)(i)(II), and (J) as they relate to West Virginia's PSD program and is taking separate action on section 110(a)(2)(E)(ii) as it relates to section 128 (State Boards). This rulemaking action does not include section 110(a)(2)(I) of the CAA which pertains to the nonattainment requirements of part D, Title I of the CAA, since this element is not required to be submitted by the 3-year submission deadline of section 110(a)(1), and will be addressed in a separate process. This rulemaking action also does not include action on section 110(a)(2)(D)(i)(I), because this element, or portions thereof, is not required to be submitted by a state until the EPA has quantified a state's obligations. *See EME Homer City,* 696 F.3d 7.

IV. Statutory and Executive Order Reviews

A. General Requirements

Under the CAA, the Administrator is required to approve a SIP submission that complies with the provisions of the CAA and applicable Federal regulations. 42 U.S.C. 7410(k); 40 CFR 52.02(a). Thus, in reviewing SIP submissions, EPA's role is to approve state choices, provided that they meet the criteria of the CAA. Accordingly, this action merely approves state law as meeting Federal requirements and does not impose additional requirements beyond those imposed by state law. For that reason, this action:

- Is not a ''significant regulatory action'' subject to review by the Office of Management and Budget under Executive Order 12866 (58 FR 51735, October 4, 1993);
- does not impose an information collection burden under the provisions of the Paperwork Reduction Act (44 U.S.C. 3501 *et seq.*);
- is certified as not having a significant economic impact on a substantial number of small entities under the Regulatory Flexibility Act (5 U.S.C. 601 *et seq.*);
- does not contain any unfunded mandate or significantly or uniquely affect small governments, as described in the Unfunded Mandates Reform Act of 1995 (Pub. L. 104–4);
- does not have Federalism implications as specified in Executive Order 13132 (64 FR 43255, August 10, 1999);
- is not an economically significant regulatory action based on health or safety risks subject to Executive Order 13045 (62 FR 19885, April 23, 1997);
- is not a significant regulatory action subject to Executive Order 13211 (66 FR 28355, May 22, 2001);
- is not subject to requirements of Section 12(d) of the National Technology Transfer and Advancement Act of 1995 (15 U.S.C. 272 note) because application of those requirements would be inconsistent with the CAA; and
- does not provide EPA with the discretionary authority to address, as appropriate, disproportionate human health or environmental effects, using practicable and legally permissible methods, under Executive Order 12898 (59 FR 7629, February 16, 1994).

In addition, this rule does not have tribal implications as specified by Executive Order 13175 (65 FR 67249, November 9, 2000), because the SIP is not approved to apply in Indian country located in the state, and EPA notes that it will not impose substantial direct costs on tribal governments or preempt tribal law.

B. Submission to Congress and the Comptroller General

The Congressional Review Act, 5 U.S.C. 801 *et seq.,* as added by the Small Business Regulatory Enforcement Fairness Act of 1996, generally provides that before a rule may take effect, the agency promulgating the rule must submit a rule report, which includes a copy of the rule, to each House of the Congress and to the Comptroller General of the United States. EPA will submit a report containing this action and other required information to the U.S. Senate, the U.S. House of Representatives, and the Comptroller General of the United States prior to publication of the rule in the **Federal Register**. A major rule cannot take effect until 60 days after it is published in the **Federal Register**. This action is not a ''major rule'' as defined by 5 U.S.C. 804(2).

C. Petitions for Judicial Review

Under section 307(b)(1) of the CAA, petitions for judicial review of this action must be filed in the United States Court of Appeals for the appropriate circuit by June 6, 2014. Filing a petition for reconsideration by the Administrator of this final rule does not affect the finality of this action for the purposes of judicial review nor does it extend the time within which a petition for judicial review may be filed, and shall not postpone the effectiveness of such rule or action. This action, which satisfies certain infrastructure requirements of section 110(a)(2) of the CAA for the 2008 ozone NAAQS for the State of West Virginia, may not be challenged later in proceedings to enforce its requirements. (*See* section 307(b)(2).)

List of Subjects in 40 CFR Part 52

Environmental protection, Air pollution control, Incorporation by reference, Reporting and recordkeeping requirements, Ozone.

Dated: March 21, 2014.

W.C. Early,

Acting Regional Administrator, Region III.

40 CFR part 52 is amended as follows:

PART 52—APPROVAL AND PROMULGATION OF IMPLEMENTATION PLANS

■ 1. The authority citation for part 52 continues to read as follows:

Authority: 42 U.S.C. 7401 *et seq.*

Subpart XX—West Virginia

■ 2. In § 52.2520, the table in paragraph (e) is amended by revising the entry for Section 110(a)(2) Infrastructure Requirements for the 2008 8-Hour Ozone NAAQS. The amendment reads as follows:

§ 52.2520 Identification of plan.

* * * * *

(e) * * *

Name of non-regulatory SIP revision	Applicable geographic area	State submittal date	EPA approval date	Additional explanation
*	*	*	*	*
Section 110(a)(2) Infrastructure Requirements for the 2008 8-Hour Ozone NAAQS.	Statewide	8/31/11, 2/17/12	10/17/12, 77 FR 63736	Approval of the following PSD-related elements or portions thereof: 110(a)(2)(C), (D)(i)(II), and (J), except taking no action on the definition of "regulated NSR pollutant" found at 45CSR14 section 2.66 only as it relates to the requirement to include condensable emissions of particulate matter in that definition. See § 52.2522(i).
		2/17/12	4/7/2014 [Insert Federal Register page number where the document begins and date].	This action addresses the following CAA elements, or portions thereof: 110(a)(2)(A), (B), (C), (D), (E), (F), (G), (H), (J), (K), (L), and (M).
*	*	*	*	*

[FR Doc. 2014–07589 Filed 4–4–14; 8:45 am]

BILLING CODE 6560–50–P

ENVIRONMENTAL PROTECTION AGENCY

40 CFR Part 52

[EPA–R03–OAR–2013–0413; FRL–9909–10–Region 3]

Approval and Promulgation of Air Quality Implementation Plans; Pennsylvania; Infrastructure Requirements for the 2008 Lead National Ambient Air Quality Standards

AGENCY: Environmental Protection Agency (EPA).

ACTION: Final rule.

SUMMARY: The Environmental Protection Agency (EPA) is approving a State Implementation Plan (SIP) revision submitted by the Commonwealth of Pennsylvania pursuant to the Clean Air Act (CAA). Whenever new or revised national ambient air quality standards (NAAQS) are promulgated, the CAA requires states to submit a plan for the implementation, maintenance, and enforcement of the NAAQS. The plan is required to address basic program elements, including, but not limited to regulatory structure, monitoring, modeling, legal authority, and adequate resources necessary to assure attainment and maintenance of the standards. These elements are referred to as infrastructure requirements. The Commonwealth of Pennsylvania has made a submittal addressing the infrastructure requirements for the 2008 lead (Pb) NAAQS.

DATES: This final rule is effective on May 7, 2014.

ADDRESSES: EPA has established a docket for this action under Docket ID Number EPA–R03–OAR–2013–0413. All documents in the docket are listed in the *www.regulations.gov* Web site. Although listed in the electronic docket, some information is not publicly available, i.e., confidential business information (CBI) or other information whose disclosure is restricted by statute. Certain other material, such as copyrighted material, is not placed on the Internet and will be publicly available only in hard copy form. Publicly available docket materials are available either electronically through *www.regulations.gov* or in hard copy for public inspection during normal business hours at the Air Protection Division, U.S. Environmental Protection Agency, Region III, 1650 Arch Street, Philadelphia, Pennsylvania 19103. Copies of the State submittal are available at the Pennsylvania Department of Environmental Protection, Bureau of Air Quality Control, P.O. Box 8468, 400 Market Street, Harrisburg, Pennsylvania 17105.

FOR FURTHER INFORMATION CONTACT: Ruth Knapp, (215) 814–2191, or by email at *knapp.ruth@epa.gov.*

SUPPLEMENTARY INFORMATION:

I. Summary of SIP Revision

On July 16, 2013 (78 FR 42482), EPA published a notice of proposed rulemaking (NPR) for the Commonwealth of Pennsylvania proposing approval of Pennsylvania's September 24, 2012 SIP submittal to satisfy several requirements of section 110(a)(2) of the CAA for the 2008 Pb NAAQS. In the NPR, EPA proposed approval of the following infrastructure elements: Sections 110(a)(2)(A), (B), (C), (D)(i)(I), (D)(i)(II), D(ii), (E)(i), (E)(iii), (F), (G), (H), (J), (K), (L), and (M). The NPR does not include section 110(a)(2)(I) which pertains to the nonattainment planning requirements of part D, Title I of the CAA, since this element is not required to be submitted by the 3-year submission deadline of section 110(a)(1), and will be addressed in a separate process. EPA is taking separate action on the portion of 110(a)(2)(E)(ii) as it relates to CAA section 128 (State Boards).

The rationale supporting EPA's proposed action, including the scope of infrastructure SIPs in general, is explained in the NPR and the technical support document (TSD) accompanying the NPR and will not be restated here. The TSD is available online at *www.regulations.gov,* Docket ID Number EPA–R03–OAR–2013–0413. On August 20, 2013, EPA received public comments on its July 16, 2013 NPR from the Berks County Commissioners (referred to herein as the commenter). A summary of the comments submitted and EPA's responses are provided in section II of this action.

II. Summary of Public Comments and EPA Responses

Comment: The commenter has raised several concerns related to lead monitoring and permitting in Berks County, Pennsylvania near the Exide Technologies secondary lead smelter facility (Exide). The commenter does not believe that EPA should approve the lead infrastructure SIP submitted by the Commonwealth for the 2008 lead NAAQS for several reasons, most of which are related to the commenter's concerns about the adequacy of the lead monitoring network and relate to the commenter's interpretation of the requirements of section 110(a)(2)(B) of the CAA.

First, the commenter contends that the existing network being used by the Commonwealth is not adequate and does not meet applicable EPA guidance (EPA–454/R–92–009) and 40 CFR part 58 Appendix D. Specifically, the commenter contends that the two

monitoring stations (Laureldale South and Laureldale North) being used by the Commonwealth to assess lead NAAQS compliance in the area are not located at points of maximum ambient concentration and asserts the Pennsylvania monitors must be located at the point of maximum concentration.

Additionally, the commenter states other lead monitors in the area show higher concentrations of lead. The commenter states that the Pennsylvania Department of Environmental Protection (PADEP) refused to consider voluminous monitoring station data demonstrating more significant nonattainment than at the PADEP monitors. The commenter believes these monitors, known as the St. Mike's monitors, operated and collected data until at least April 2013.

Response: EPA disagrees with the commenter regarding the adequacy of Pennsylvania's lead monitoring network. The Laureldale South lead monitor (AQS ID 42–011–0717) was established January 1, 1976 and has been in continual operation since that date. The monitor has been effective in identifying violations of the Pb NAAQS as recently as January 2013. Additionally, collocated monitors were established at Laureldale North (AQS ID 42–011–0020) on January 1, 2010 to comply with the November 2008 lead NAAQS.[1] The monitors at Laureldale North have also been effective in identifying violations of the lead NAAQS as recently as December 2012.

Section 4.5(a) of Appendix D to 40 CFR part 58 provides for siting of monitors where lead concentrations from all sources are expected to be at the maximum taking into account logistics and the potential for population exposure. PADEP has effectively deployed monitors in locations that are both within the bounds of the 2008 rule and 40 CFR part 58 Appendix D considering important factors such as logistics, while still identifying local NAAQS violations.

Prior to deploying the Laureldale North monitors, PADEP submitted a modeling study and conducted site visits with EPA. PADEP evaluated the location of the St. Mike's monitors during this period but concluded that the existing electrical power infrastructure at the St. Mike's monitoring site was insufficient to support and maintain appropriate state-run monitors in addition to the existing St. Mike's monitors operated and maintained by Exide at the St. Mike's monitor locations. During PADEP's study, PADEP concluded it would need additional infrastructure including a new transformer and additional power poles to add monitors at the St. Mike's location, which was a logistical impediment to locating any monitor at these locations given the additional financial costs of using these sites.

PADEP selected the Laureldale North site because it was logistically feasible; analysis indicated it would monitor levels above the NAAQS; and it met siting requirements of CFR part 58 appendix D. Subsequently, the Laureldale North site was properly sited and has recorded monitored violations of the 2008 lead NAAQS with appropriately quality assured and quality controlled data in accordance with 40 CFR part 58. Since this location along with Laureldale South has recorded violations of the NAAQS, these sites may need to be maintained for decades after the area reaches attainment.

The current location of the monitors (Laureldale North and South) was approved by EPA based on the modeling study in conjunction with 40 CFR part 58 Appendix D paragraph 4.5(a), which provides in part that many factors like logistics are considered when deploying any ambient air monitor other than simply the modeled maximum concentration. Such factors include, but are not limited to, access, leasing agreements, accessibility to electricity, costs and worker safety. PADEP's conclusions regarding appropriate monitors for the 2008 lead NAAQS was reasonable based on the factors PADEP considered, including logistics. EPA believes Pennsylvania has valid concerns regarding logistics and resources with adding additional monitors (or relocating monitors) in this area (including at the St. Mike's locations). EPA has approved Pennsylvania's 2013 annual ambient air monitoring network plan and earlier plans because they met the requirements of 40 CFR part 58.

It appears from material submitted by the commenter that the commenter has at times in the past indicated to PADEP that it would help ''defray'' some costs if PADEP were to place a monitor at the St. Mike's sites.[2] However, the current monitoring network meets the applicable requirements and establishing an additional monitor would lead to PADEP incurring significant costs for lab work, personnel, and maintenance associated with Pennsylvania operating an additional monitor. While the commenter states that it offered to ''help offset'' some of the operational costs of Pennsylvania maintaining and operating an appropriate monitor at the St. Mike's location in addition to the Laureldale North and South monitors, the commenter has not established any factual evidence or assurances to contradict Pennsylvania's concerns about maintaining such a monitoring site over many years if needed. Since the current network meets the applicable requirements, EPA believes Pennsylvania's logistical and financial concerns still support its Laureldale North and South monitors as adequate for the 2008 lead NAAQS, as they are appropriate devices and methods to monitor, compile and analyze data on ambient air quality as required by section 110(a)(2)(B) of the CAA.

EPA concludes that Pennsylvania meets the requirements of section 110(a)(2)(B) of the CAA for monitoring for the 2008 lead NAAQS, as discussed in EPA's Lead Infrastructure Guidance and as described in detail in EPA's technical support document accompanying the NPR. EPA's analysis will not be restated here. The TSD is available in the docket for this action at *www.regulations.gov,* Docket ID Number EPA–R03–OAR–2013–0413. While the St. Mike's monitors which are not included in Pennsylvania's approved monitoring network may show divergent ambient lead concentration data from the Laureldale North and South monitors, EPA does not view that data as dispositive regarding the adequacy of Pennsylvania's monitoring network for the 2008 lead NAAQS, particularly in light of the logistical issues discussed above. Pennsylvania's network meets all applicable

[1] The EPA issued a final rule on November 12, 2008 that revised the NAAQS for lead and associated ambient air lead monitoring requirements (73 FR 66964, codified at 40 CFR part 58). As part of the lead monitoring requirements, monitoring agencies are required to monitor ambient air near lead sources which are expected to or have been shown to have a potential to contribute to a 3-month average lead concentration in ambient air in excess of the level of the NAAQS. At a minimum, 40 CFR part 58 Appendix D requires monitoring agencies to monitor near non-airport lead sources that emit 0.50 ton per year (tpy) or more into the ambient air. Pennsylvania's monitors at Laureldale South and Laureldale North monitor near a lead source (Exide) that emits or has emitted over 0.50 tpy or more of lead, and the monitors meet the EPA's monitor requirements from the 2008 rule and 40 CFR part 58 Appendix D.

[2] EPA believes these nonapproved monitors which were referred to by the commenter as the St. Mike's monitors were owned and operated by Exide until at least January 2012 at which point EPA believes Exide ceased operating the monitors because the facility also ceased operation. While the commenter asserts the St. Mike's monitors were operated through at least April 2013, and EPA believes the monitors ceased operations sooner, EPA does not believe the date the St. Mike's monitors stopped operating and collecting data is relevant to the issue here which is the adequacy of Pennsylvania's monitoring network for the 2008 lead NAAQS.

requirements in the 2008 rule, 40 CFR part 58 Appendix D and in applicable EPA guidance (EPA–454/R–92–009). EPA notes that data from monitors which do not meet federal monitoring requirements, such as the Federal quality assurance and quality control requirements in Appendices A, C, and E to 40 CFR part 58, have limited use and cannot be compared to the NAAQS for regulatory purposes by EPA.

EPA also notes that because Laureldale North and South have shown recent violations of the 2008 lead NAAQS with appropriately quality assured, quality controlled data from a monitor system audited by an independent auditor for performance, any monitor data from nonapproved monitors which may show potentially higher lead concentrations would likely not alter the nonattainment status or requirements of the area near the Exide facility. EPA also notes that the area is required to attain the NAAQS as expeditiously as practicable, but no later than December 31, 2015, and the area would generally need both a modeling analysis and monitored data to demonstrate it was attaining the NAAQS.

Comment: The commenter also asserts that the Laureldale North monitor was not placed in an appropriate location because the analysis used for siting its location did not assess fugitive lead emissions from the Exide facility. The commenter states that the PADEP has taken no apparent action with respect to the issues regarding the Title V permit for Exide which has allegedly been remanded to PADEP for further consideration of fugitive lead emissions and that PADEP's failure to make final determinations regarding accurate identification and quantification of fugitive emissions from the Exide facility exacerbates the inaccuracy of the SIP monitoring station conclusions made by PADEP.

Response: EPA disagrees with the commenter regarding the alleged inadequacy of Pennsylvania's lead monitoring network due to failure to assess fugitive lead emissions when siting the monitors. EPA is aware that PADEP did not use fugitive emission sources in their 2009 modeling study of Exide prior to deployment of the Laureldale North monitors. However, fugitive emissions are extremely difficult to quantify, there is no standard way to do so, and inclusion in the modeling would have added to uncertainty already inherent in the model. Additionally, ground-level fugitive emissions do not travel far from the source and stay inside or very near the property fenceline. Therefore, EPA does not consider the lack of fugitive emissions from Pennsylvania's modeling as dispositive to EPA's conclusion that Pennsylvania's lead monitors are adequate for the 2008 lead NAAQS as required by the 2008 rule and 40 CFR part 58 Appendix D and adequate to meet the requirements of section110(a)(2)(B) of the CAA.[3]

Comment: The commenter alleges that EPA should not approve the Pennsylvania infrastructure submittal for the 2008 lead NAAQS because the lead monitoring network does not ensure that any future lead NAAQS attainment determinations are accurate and ''will result in inaccurate NAAQS compliance conclusions.'' The commenter states PADEP's refusal to consider data from other monitors will allow unacceptable risk and/or actual harm to residents in the nonattainment area.

Response: As noted earlier in this rulemaking action, EPA has concluded that the existing monitors satisfy the requirements of part 58. Furthermore, the existing monitors have identified nonattainment at this site and as a result, the area is required to develop a plan to attain the NAAQS as expeditiously as practicable, but no later than December 31, 2015. Before the area is redesignated to attainment, the area would generally need both a modeling analysis and monitored data to demonstrate it was attaining the NAAQS. To the extent the commenter believes that the attainment demonstration and associated modeling is inadequate to assure compliance with the NAAQS in the entire nonattainment area, EPA believes the commenter should raise those concerns with Pennsylvania, and EPA, at the time for public comment on those documents.[4] The NAAQS are established to provide protection for public health (including the health of sensitive populations such as children) with an adequate margin of safety. Thus, EPA believes that attainment of the NAAQS throughout the nonattainment area will prevent harm to local residents from lead emitted to the ambient air.[5]

[3] To the extent the commenter is objecting to the lack of action on the facility's remanded Title V permit, those issues are outside the scope of this proceeding and should be pursued by the commenter within the Title V administrative process for permits.

[4] As noted above, however, EPA gives, at most, limited weight to monitoring data that does not meet the regulatory requirements for comparison to the NAAQS, such as those set forth in Appendices A, C, and E of part 58.

[5] If EPA revises the lead NAAQS in the future, a separate infrastructure submittal that addresses the requirements of Section 110(a)(2)(B) of the CAA will be developed by Pennsylvania for EPA's review and approval.

III. Final Action

EPA is approving, as a revision to the Pennsylvania SIP, Pennsylvania's September 24, 2012 submittal which provides the basic program elements specified in sections 110(a)(2)(A), (B), (C), (D)(i)(I), (D)(i)(II), (D)(ii), (E)(i),(E)(iii), (F), (G), (H), (J), (K), (L), and (M) of the CAA, necessary to implement, maintain, and enforce the 2008 Pb NAAQS. This rulemaking action does not include approval of Pennsylvania's submittal for section 110(a)(2)(E)(ii) which pertains to CAA section 128 and which EPA will address in a separate action.

IV. Statutory and Executive Order Reviews

A. General Requirements

Under the CAA, the Administrator is required to approve a SIP submission that complies with the provisions of the CAA and applicable Federal regulations. 42 U.S.C. 7410(k); 40 CFR 52.02(a). Thus, in reviewing SIP submissions, EPA's role is to approve state choices, provided that they meet the criteria of the CAA. Accordingly, this action merely approves state law as meeting Federal requirements and does not impose additional requirements beyond those imposed by state law. For that reason, this action:

- Is not a ''significant regulatory action'' subject to review by the Office of Management and Budget under Executive Order 12866 (58 FR 51735, October 4, 1993);
- Does not impose an information collection burden under the provisions of the Paperwork Reduction Act (44 U.S.C. 3501 *et seq.*);
- Is certified as not having a significant economic impact on a substantial number of small entities under the Regulatory Flexibility Act (5 U.S.C. 601 *et seq.*);
- Does not contain any unfunded mandate or significantly or uniquely affect small governments, as described in the Unfunded Mandates Reform Act of 1995 (Pub. L. 104–4);
- Does not have Federalism implications as specified in Executive Order 13132 (64 FR 43255, August 10, 1999);
- Is not an economically significant regulatory action based on health or safety risks subject to Executive Order 13045 (62 FR 19885, April 23, 1997);
- Is not a significant regulatory action subject to Executive Order 13211 (66 FR 28355, May 22, 2001);
- Is not subject to requirements of Section 12(d) of the National Technology Transfer and Advancement Act of 1995 (15 U.S.C. 272 note) because

application of those requirements would be inconsistent with the CAA; and

• Does not provide EPA with the discretionary authority to address, as appropriate, disproportionate human health or environmental effects, using practicable and legally permissible methods, under Executive Order 12898 (59 FR 7629, February 16, 1994).

In addition, this rule does not have tribal implications as specified by Executive Order 13175 (65 FR 67249, November 9, 2000), because the SIP is not approved to apply in Indian country located in the state, and EPA notes that it will not impose substantial direct costs on tribal governments or preempt tribal law.

B. Submission to Congress and the Comptroller General

The Congressional Review Act, 5 U.S.C. 801 *et seq.,* as added by the Small Business Regulatory Enforcement Fairness Act of 1996, generally provides that before a rule may take effect, the agency promulgating the rule must submit a rule report, which includes a copy of the rule, to each House of the Congress and to the Comptroller General of the United States. EPA will submit a report containing this action and other required information to the U.S. Senate, the U.S. House of Representatives, and the Comptroller General of the United States prior to publication of the rule in the **Federal Register**. A major rule cannot take effect until 60 days after it is published in the **Federal Register**. This action is not a ''major rule'' as defined by 5 U.S.C. 804(2).

C. Petitions for Judicial Review

Under section 307(b)(1) of the CAA, petitions for judicial review of this action must be filed in the United States Court of Appeals for the appropriate circuit by June 6, 2014. Filing a petition for reconsideration by the Administrator of this final rule does not affect the finality of this action for the purposes of judicial review nor does it extend the time within which a petition for judicial review may be filed, and shall not postpone the effectiveness of such rule or action. This action pertaining to Pennsylvania's section 110(a)(2) infrastructure elements for the 2008 Pb NAAQS, may not be challenged later in proceedings to enforce its requirements. (*See* section 307(b)(2).)

List of Subjects in 40 CFR part 52

Environmental protection, Air pollution control, Incorporation by reference, Lead, Reporting and recordkeeping requirements.

Dated: March 21, 2014.

W.C. Early,

Acting Regional Administrator, Region III.

40 CFR part 52 is amended as follows:

PART 52—APPROVAL AND PROMULGATION OF IMPLEMENTATION PLANS

■ 1. The authority citation for part 52 continues to read as follows:

Authority: 42 U.S.C. 7401 *et seq.*

Subpart NN—Pennsylvania

■ 2. In § 52.2020, the table in paragraph (e)(1) is amended by adding an entry for section 110(a)(2) Infrastructure Requirements for the 2008 Pb NAAQS at the end of the table to read as follows:

§ 52.2020 Identification of plan.

* * * * *

(e) * * *

(1) * * *

Name of non-regulatory SIP revision	Applicable geographic area	State submittal date	EPA approval date	Additional explanation
*	*	*	*	*
Section 110(a)(2) Infrastructure Requirements for the 2008 Pb NAAQS.	Statewide	5/24/12	4/7/2014 [*Insert* **Federal Register** page number where the document begins and date].	This rulemaking action addresses the following CAA elements: 110(a)(2)(A), (B), (C), (D)(i)(I), (D)(i)(II), (D)(ii), (E)(i), (E)(iii), (F), (G), (H), (J), (K), (L), and (M).

[FR Doc. 2014–07569 Filed 4–4–14; 8:45 am]

BILLING CODE 6560–50–P

ENVIRONMENTAL PROTECTION AGENCY

40 CFR Part 52

[EPA–R09–OAR–2013–0681; FRL–9909–07–Region–9]

Approval and Promulgation of State Implementation Plans; Hawaii; Infrastructure Requirements for the 2008 Lead National Ambient Air Quality Standard

AGENCY: Environmental Protection Agency (EPA).

ACTION: Final rule.

SUMMARY: Environmental Protection Agency (EPA) is approving elements of a State Implementation Plan (SIP) revision submitted by the State of Hawaii on February 13, 2013, pursuant to the requirements of the Clean Air Act (CAA or the Act) for the 2008 Lead (Pb) national ambient air quality standards (NAAQS). Section 110(a) of the CAA requires that each state adopt and submit a SIP for the implementation, maintenance, and enforcement of each NAAQS promulgated by EPA.

DATES: Effective Date: This final rule is effective on May 7, 2014.

ADDRESSES: EPA has established a docket for this action, identified by Docket ID Number EPA–R09–OAR–2013–0681. The index to the docket for this action is available electronically at *http://www.regulations.gov* and in hard copy at EPA Region IX, 75 Hawthorne Street, San Francisco, California. While all documents in the docket are listed in the index, some information may be publicly available only at the hard copy location (e.g., copyrighted material), and some may not be publicly available in either location (e.g., CBI). To inspect the hard copy materials, please schedule an appointment during normal business hours with the contact listed directly below.

FOR FURTHER INFORMATION CONTACT: Dawn Richmond, Air Planning Office (AIR–2), U.S. Environmental Protection Agency, Region IX, (415) 972–3207, *richmond.dawn@epa.gov.*

SUPPLEMENTARY INFORMATION: Throughout this document, the terms ''we,'' ''us,'' and ''our'' refer to EPA.

Table of Contents

I. Background
II. Final Action
III. Statutory and Executive Order Reviews

I. Background

On October 23, 2013 (78 FR 63145), EPA proposed to approve elements of the *Hawaii State Implementation Plan Revision for 2008 Lead National Ambient Air Quality Standard, Clean Air Act § 110(a)(1) and (2)* (February 13, 2013) (''Hawaii Pb Infrastructure SIP''), submitted by the State of Hawaii on

February 13, 2013. In our October 23, 2013 proposed rule, we also proposed to approve Hawaii Administrative Rules (HAR) section 11–60.1–90 (''Permit content'') into the Hawaii SIP.

Section 110(a) of the CAA requires that each state adopt and submit a SIP for the implementation, maintenance, and enforcement of each NAAQS promulgated by EPA. The rationale supporting EPA's action, including the scope of infrastructure SIPs in general, is explained in that Notice of Proposed Rulemaking (NPR) and the associated technical support document (TSD) and will not be restated here. The TSD is available online at *http://www.regulations.gov,* Docket ID number EPA–R09–OAR– 2013–0681. No public comments were received on the NPR.

II. Final Action

EPA is approving HAR 11–60.1–90 (''Permit content'') and elements of the Hawaii Pb Infrastructure SIP. EPA is approving the Hawaii Pb Infrastructure SIP with respect to the following requirements:

- Section 110(a)(2)(A): Emission limits and other control measures.
- Section 110(a)(2)(B): Ambient air quality monitoring/data system.
- Section 110(a)(2)(C) (in part): Program for enforcement of control measures and regulation of new stationary sources (minor New Source Review (NSR) program only).
- Section 110(a)(2)(D)(i)(I): Interstate transport (significant contribution and interference with maintenance).
- Section 110(a)(2)(D)(i)(II) (in part): Interstate transport (visibility protection only).
- Section 110(a)(2)(E): Adequate resources and authority, conflict of interest, and oversight of local governments and regional agencies.
- Section 110(a)(2)(F): Stationary source monitoring and reporting.
- Section 110(a)(2)(G): Emergency episodes.
- Section 110(a)(2)(H): SIP revisions.
- Section 110(a)(2)(J) (in part): Public notification.
- Section 110(a)(2)(K): Air quality modeling and submission of modeling data.
- Section 110(a)(2)(L): Permitting fees.
- Section 110(a)(2)(M): Consultation/participation by affected local entities.

As explained in our October 23, 2013 proposed rule and related TSD, we previously found the Hawaii Pb Infrastructure SIP incomplete with respect to the PSD-related requirements of section 110(a)(2). Under CAA section 110(k)(1)(C), where EPA determines that a portion of a SIP submission is incomplete, ''the State shall be treated as not having made the submission (or, in the Administrator's discretion, part thereof).'' Accordingly, we are not acting on the Hawaii Pb Infrastructure SIP with respect to the PSD-related requirements in Sections 110(a)(2)(C), (D)(i)(II), (D)(ii), and (J).

III. Statutory and Executive Order Reviews

Under the CAA, the Administrator is required to approve a SIP submission that complies with the provisions of the Act and applicable Federal regulations (42 U.S.C. 7410(k), 40 CFR 52.02(a)). Thus, in reviewing SIP submissions, EPA's role is to approve state choices, provided that they meet the criteria of the CAA. Accordingly, this action merely approves certain state laws as meeting federal requirements; this action does not impose additional requirements beyond those imposed by state law. For that reason, this action:

- Is not a ''significant regulatory action'' subject to review by the Office of Management and Budget under Executive Order 12866 (58 FR 51735, October 4, 1993);
- Does not impose an information collection burden under the provisions of the Paperwork Reduction Act (44 U.S.C. 3501 *et seq.*);
- Is certified as not having a significant economic impact on a substantial number of small entities under the Regulatory Flexibility Act (5 U.S.C. 601 *et seq.*);
- Does not contain any unfunded mandate or significantly or uniquely affect small governments, as described in the Unfunded Mandates Reform Act of 1995 (Pub. L. 104–4);
- Does not have Federalism implications as specified in Executive Order 13132 (64 FR 43255, August 10, 1999); is not an economically significant regulatory action based on health or safety risks subject to Executive Order 13045 (62 FR 19885, April 23, 1997);
- Is not a significant regulatory action subject to Executive Order 13211 (66 FR 28355, May 22, 2001);
- Is not subject to requirements of section 12(d) of the National Technology Transfer and Advancement Act of 1995 (15 U.S.C. 272 note) because application of those requirements would be inconsistent with the CAA; and,
- Does not provide EPA with the discretionary authority to address, as appropriate, disproportionate human health or environmental effects, using practicable and legally permissible methods, under Executive Order 12898 (59 FR 7629, February 16, 1994).

In addition, this rule does not have tribal implications as specified by Executive Order 13175 (65 FR 67249, November 9, 2000), because the SIP is not approved to apply in Indian country located in the State, and EPA notes that it will not impose substantial direct costs on tribal governments or preempt tribal law.

The Congressional Review Act, 5 U.S.C. section 801 et seq., as added by the Small Business Regulatory Enforcement Fairness Act of 1996, generally provides that before a rule may take effect, the agency promulgating the rule must submit a rule report, which includes a copy of the rule, to each House of the Congress and to the Comptroller General of the United States. EPA will submit a report containing this rule and other required information to the U.S. Senate, the U.S. House of Representatives, and the Comptroller General of the United States prior to publication of the rule in the **Federal Register**. A major rule cannot take effect until 60 days after it is published in the **Federal Register**. This action is not a ''major rule'' as defined by 5 U.S.C. 804(2).

Under section 307(b)(1) of the Clean Air Act, petitions for judicial review of this action must be filed in the United States Court of Appeals for the appropriate circuit by June 6, 2014. Filing a petition for reconsideration by the Administrator of this final rule does not affect the finality of this rule for the purposes of judicial review nor does it extend the time within which a petition for judicial review may be filed, and shall not postpone the effectiveness of such rule or action. This action may not be challenged later in proceedings to enforce its requirements (see section 307(b)(2)).

List of Subjects in 40 CFR Part 52

Environmental protection, Air pollution control, Incorporation by reference, Intergovernmental relations, Lead, Reporting and recordkeeping requirements.

Dated: March 14, 2014.

Jared Blumenfeld,

Regional Administrator, Region IX.

Chapter I, title 40 of the Code of Federal Regulations is amended as follows:

PART 52—APPROVAL AND PROMULGATION OF IMPLEMENTATION PLANS

■ 1. The authority citation for part 52 continues to read as follows:

Authority: 42 U.S.C. 7401 *et seq.*

Subpart M—Hawaii

■ 2. In § 52.620,

■ a. The table in paragraph (c) is amended by adding an entry for ''11–60.1–90'' after the entry for ''11–60.1–84''; and

■ b. The table in paragraph (e) is amended by adding an entry for ''Hawaii State Implementation Plan Revision for 2008 Lead National Ambient Air Quality Standard, Clean Air Act Section 110(a)(1) & (2), excluding attachment 6, and appendices A, B, C, and F'' after the entry for ''State Implementation Plan Revision, Clean Air Act Section 110(a)(2), 1997 Ozone National Ambient Air Quality Standard and 1997 and 2006 $PM_{2.5}$ National Ambient Air Quality Standards''.

The amendments read as follows:

§ 52.620 Identification of plan.

* * * * *

(c) * * *

EPA-APPROVED STATE OF HAWAII REGULATIONS

State citation	Title/subject	Effective date	EPA-approval date	Explanation
*	*	*	*	*
11–60.1–90	Permit content	9/15/01	[Insert FEDERAL REGISTER page number where the document begins and 4/7/2014].	Newly added to the Hawaii SIP. Submitted on February 13, 2013.
*	*	*	*	*

* * * * *

(e) * * *

EPA-APPROVED HAWAII NONREGULATORY PROVISIONS AND QUASI–REGULATORY MEASURES

Name of SIP provision	Applicable geographic or nonattainment area	State submittal date	EPA-approval date	Explanation
*	*	*	*	*
Hawaii State Implementation Plan Revision for 2008 Lead National Ambient Air Quality Standard, Clean Air Act Section 110(a)(1) & (2), excluding attachment 6, and appendices A, B, C, F.	Statewide	2/13/13	[Insert FEDERAL REGISTER page number where the document begins and 4/7/2014].	Approved SIP revision excludes attachment 6 (''Summary of Public Participation Proceedings''), appendix A (''Hawaii Revised Statutes Chapter 342A, Air Pollution Control''), appendix B (''Hawaii Revised Statutes Chapter 84, Standards of Conduct''), appendix C (''Hawaii Administrative Rules Chapter 11–60.1, Air Pollution Control''), and appendix F (''Approval and Public Participation Proceedings from the Most Recent Amendment and Public Comment for HAR 11–60.1–90: September 15, 2001 version''). The statutory provisions in appendices A and B were previously approved and are listed separately in the table under paragraph (e). EPA-approved regulations contained in appendix C are listed separately in the table under paragraph (c). This action addresses the following CAA elements or portions thereof for the 2008 Pb NAAQS: 110(a)(2)(A), (B), (C), (D)(i)(I), (E), (F), (G), (H), (J), (K), (L), and (M).
*	*	*	*	*

[FR Doc. 2014–07565 Filed 4–4–14; 8:45 am]

BILLING CODE 6560–50–P

FEDERAL COMMUNICATIONS COMMISSION

47 CFR Part 73

[MB Docket No. 14–1; RM–11710; DA 14–363]

Television Broadcasting Services; South Bend, Indiana

AGENCY: Federal Communications Commission.

ACTION: Final rule.

SUMMARY: A petition for rulemaking was filed by LeSEA Broadcasting of South Bend, Inc. (''LeSEA''), the licensee of station WHME–TV, channel 48, South Bend, Indiana. Previously, the Commission substituted channel 46 for channel 48 at LeSEA's request, and LeSEA now seeks to return to its previously allotted channel 48. LeSEA believes that grant of this reallotment would serve the public interest by allowing the station to continue to operate its currently licensed facilities and to channel the monies it would

have spent building out channel 46 facilities into its current service.

DATES: This rule is effective May 7, 2014.

FOR FURTHER INFORMATION CONTACT: Adrienne Y. Denysyk, *Adrienne.Denysyk@fcc.gov,* Media Bureau, (202) 418–2651.

SUPPLEMENTARY INFORMATION: This is a synopsis of the Commission's *Report and Order,* MB Docket No. 14–1, adopted March 19, 2014, and released March 19, 2014. The full text of this document is available for public inspection and copying during normal business hours in the FCC's Reference Information Center at Portals II, CY–A257, 445 12th Street SW., Washington, DC, 20554. This document will also be available via ECFS (*http://fjallfoss.fcc.gov/ecfs/*). This document may be purchased from the Commission's duplicating contractor, Best Copy and Printing, Inc., 445 12th Street SW., Room CY–B402, Washington, DC 20554, telephone 1–800–478–3160 or via the company's Web site, *http://www.bcpiweb.com.* To request materials in accessible formats for people with disabilities (braille, large print, electronic files, audio format), send an email to *fcc504@fcc.gov* or call the Consumer & Governmental Affairs Bureau at 202–418–0530 (voice), 202–418–0432 (tty).

This document does not contain information collection requirements subject to the Paperwork Reduction Act of 1995, Public Law 104–13. In addition, therefore, it does not contain any information collection burden ''for small business concerns with fewer than 25 employees,'' pursuant to the Small Business Paperwork Relief Act of 2002, Public Law 107–198, *see* 44 U.S.C. 3506(c)(4). Provisions of the Regulatory Flexibility Act of 1980 do not apply to this proceeding.

The Commission will send a copy of this *Report and Order* in a report to be sent to Congress and the Government Accountability Office pursuant to the Congressional review Act, *see* 5 U.S.C. 801(a)(1)(A).

List of Subjects in 47 CFR Part 73

Television.

Federal Communications Commission.

Barbara A. Kreisman,

Chief, Video Division, Media Bureau.

Final rule

For the reasons discussed in the preamble, the Federal Communications Commission amends 47 CFR Part 73 as follows:

PART 73—RADIO BROADCAST SERVICES

■ 1. The authority citation for part 73 continues to read as follows:

Authority: 47 U.S.C. 154, 303, 334, 336, and 339.

§ 73.622 [Amended]

■ 2. Section 73.622(i), the Post-Transition Table of DTV Allotments under Indiana is amended by removing channel 46 and adding channel 48 at South Bend.

[FR Doc. 2014–07713 Filed 4–4–14; 8:45 am]

BILLING CODE 6712–01–P

DEPARTMENT OF COMMERCE

National Oceanic and Atmospheric Administration

50 CFR Part 697

[Docket No. 080219213–4259–02]

RIN 0648–AT31

Atlantic Coastal Fisheries Cooperative Management Act Provisions; American Lobster Fishery

AGENCY: National Marine Fisheries Service (NMFS), National Oceanic and Atmospheric Administration (NOAA), Commerce.

ACTION: Final rule.

SUMMARY: With this final rule, NMFS implements new Federal American lobster regulations that will control lobster trap fishing effort by limiting access into the lobster trap fishery in two Lobster Conservation Management Areas. Additionally, this action will implement an individual transferable trap program in three Lobster Conservation Management Areas. The trap transfer program will allow Federal lobster permit holders to buy and sell all or part of a permit's trap allocation, subject to certain restrictions. The limited entry and trap transfer programs respond to recommendations for Federal action in the Atlantic States Marine Fisheries Commission's Interstate Fishery Management Plan for American Lobster.

DATES: Effective May 7, 2014.

Applicability Dates: Applications for Area 2 and the Outer Cape Area lobster trap fishery eligibility are due November 3, 2014. Eligibility decisions will become effective no earlier than the start of the 2015 Federal lobster fishing year, which begins May 1, 2015. NMFS will file a separate notice indicating when the Trap Transfer Program will begin. Implementation of the Trap Transfer Program at § 697.27 is contingent upon the completion of a database currently under development by the Atlantic States Marine Fisheries Commission. Once the database is complete, NMFS will notify the public and inform Federal lobster permit holders how to enroll into the program. Although the timing may allow permit holders to buy and sell transferable traps during the 2014 calendar year, those transfers will become effective no earlier than the start of the 2015 Federal lobster fishing year, which begins May 1, 2015.

ADDRESSES: Copies of the American Lobster Final Environmental Impact Statement (FEIS), including the Regulatory Impact Review (RIR) and the Final Regulatory Flexibility Analysis (FRFA) prepared for this regulatory action, are available upon written request to Peter Burns, Fishery Policy Analyst, Sustainable Fisheries Division, NMFS, 55 Great Republic Drive, Gloucester, MA 01930, telephone (978) 281–9144. The documents are also available online at *http://www.nero.noaa.gov/sfd/lobster.*

You may submit written comments regarding the burden-hour estimates or other aspects of the collection-of-information requirements contained in this final rule to the mailing address listed above and by email to *OIRA_Submission@omb.eop.gov*, or fax to (202) 395–7285.

FOR FURTHER INFORMATION CONTACT: Peter Burns, Fishery Policy Analyst, phone (978) 281–9144.

SUPPLEMENTARY INFORMATION:

Statutory Authority

These regulations modify Federal lobster fishery management measures in the Exclusive Economic Zone (EEZ) under the authority of section 803(b) of the Atlantic Coastal Fisheries Cooperative Management Act (Atlantic Coastal Act) 16 U.S.C. 5101 *et seq.,* which states that, in the absence of an approved and implemented Fishery Management Plan under the Magnuson-Stevens Fishery Conservation and Management Act (Magnuson-Stevens Act) (16 U.S.C. 1801 *et seq.*), and after consultation with the appropriate Fishery Management Council(s), the Secretary of Commerce may implement regulations to govern fishing in the EEZ, i.e., from 3 to 200 nautical miles (nm) offshore. The regulations must be (1) compatible with the effective implementation of an Interstate Fishery Management Plan (ISFMP) developed by the Atlantic States Marine Fisheries Commission (Commission), and (2) consistent with the national standards

in section 301 of the Magnuson-Stevens Act.

Background

The American lobster resource and fishery is managed by the states and Federal Government within the framework of the Commission. The role of the Commission is to facilitate cooperative management of interjurisdictional fish stocks, such as American lobster. The Commission does this by creating an ISFMP for each managed species or species complex. These plans set forth the management strategy for the fishery and are based upon the best available information from the scientists, managers, and industry. The plans are created and adopted at the Commission Management Board level—e.g., the Commission's Lobster Board created the Commission's Lobster Plan—and provide recommendations to the states and Federal Government that, in theory, allow all jurisdictions to independently respond to fishery conditions in a unified, coordinated way. NMFS is not a member of the Commission, although it is a voting member of the Commission's species management boards. The Atlantic Coastal Act, however, requires the Federal Government to support the Commission's management efforts. In the lobster fishery, NMFS has historically satisfied this legal mandate by following the Commission's Lobster Board recommendations to the extent possible and appropriate.

The Commission has recommended that trap fishery access be limited in all Lobster Conservation Management Areas (Areas). The recommendations are based in large part on Commission stock assessments that find high lobster fishing effort as a potential threat to the lobster stocks. Each time the Commission limits access to an area, it recommends that NMFS similarly restrict access to the Federal portion of the area. NMFS received its first limited access recommendation in August 1999, when the Commission limited access to Areas 3, 4, and 5 in Addendum I. NMFS received its most recent limited access recommendation in November 2009, when the Commission limited access to Area 1 in Addendum XV. NMFS has already completed rules that limit access to Areas 1, 3, 4, and 5. This final rule responds to the Commission's limited access recommendations for Area 2 and the Outer Cape Area. It also responds to the Commission's recommendation to implement a Trap Transfer Program in Areas 2, 3, and the Outer Cape Area. The specific Commission recommendations, and NMFS' response to those recommendations, are the subject of this final rule.

NMFS published a proposed rule for this action on June 12, 2013 (78 FR 35217). We received public comments from seven different entities in response to the proposed rule, and all the comments, generally, supported the measures in the proposed rule. In addition to the comments submitted in response to the proposed rule, two entities submitted comments in response to another Federal lobster action outside of the proposed rule comment period, but because some of those comments are relevant to trap transferability and other measures under consideration in this action, NMFS has considered them in the preparation of this final rule. Overall, NMFS received 17 comments submitted by 8 different commenters. All comments and responses are set forth later in this final rule (see Comments and Responses).

This final rule implements the following measures.

1. Outer Cape Area Limited Access Program

NMFS will limit access into the Outer Cape Area in a manner consistent with the Commission's recommendations. NMFS will qualify individuals for access into the Outer Cape Area based upon verifiable landings of lobster caught by traps from the Outer Cape Area in any one year from 1999–2001.

NMFS will also allocate Outer Cape Area traps according to a Commission regression analysis formula that calculates effective trap fishing effort based upon verifiable landings of lobster caught by traps from the Outer Cape Area in any one year from 2000–2002. The use of the regression formula removes the possibility that someone will benefit from simply reporting more traps than were actually fished.

NMFS will accept two types of appeals to its Outer Cape Area Limited Access Program. The first appeal is a Clerical Appeal. The second is a Director's Appeal.

The Clerical Appeal will allow NMFS to correct clerical and mathematical errors that sometimes inadvertently occur when applications are processed. It is not an appeal on the merits, and will involve no analysis of the decision maker's judgment. Accordingly, the appeal will not involve excessive agency resources to process. Requests for Clerical Appeals must be made by the applicant directly to NMFS.

The Director's Appeal will allow states to petition NMFS for comparable trap allocations on behalf of Outer Cape Area applicants denied by NMFS. The appeal will only be available to Outer Cape Area applicants for whom a state has already granted access. The state will be required to explain how NMFS' approval of the appeal would advance the interests of the Commission's Lobster Plan. The rationale for this appeal is grounded in the desire to remedy regulatory disconnects. NMFS knows that states have already made multiple separate decisions on qualification, allocation, and at least in some instances, trap transfers for the state portion of dually permitted fishers. The Director's Appeal will help prevent the potential damage that such a mismatch between state and Federal data could create. Requests for Director's Appeals must be made by the director of a state fishery management agency to NMFS. Requests for Director's Appeals will not be accepted directly from applicants.

The final rule also adopts the Commission's 2-month winter trap haul-out recommendation. The 2-month closure will take place January 15 through March 15. The 2-month closure will require the removal of all traps from Outer Cape Area waters from January 15 through March 15. The 2-month closure date aligns with Massachusetts' 2-month closure dates.

2. Area 2 Limited Access Program

NMFS will limit access into Area 2 in a manner consistent with the Commission's recommendations. NMFS will qualify individuals for access into Area 2 based upon verifiable landings of lobster caught by traps from Area 2 from 2001–2003. NMFS will also allocate traps according to a Commission formula that calculates effective trap fishing effort based upon landings during 2001, 2002, and 2003.

NMFS will also restrict allowable landings to those from ports in states that are either in or adjacent to Area 2, i.e., Massachusetts, Rhode Island, Connecticut, and New York. The Commission, in Addendum VII, found that the location of Area 2 prevented fishers from far away ports from actively fishing in Area 2. NMFS agrees with the Commission's conclusion.

For the Area 2 Limited Access Program only, NMFS will also adopt the Commission's recommended Hardship Appeal. Specifically, if an Area 2 fisher had been incapable of fishing during the 2001–2003 fishing years due to documented medical issues or military service, NMFS will allow that individual to appeal the qualification decision on hardship grounds, allowing the individual to use landings from 1999 and 2000 as the basis for qualification. NMFS will also allow a

Director's Appeal and a Clerical Appeal, as described above.

3. Timeline for Outer Cape and Area 2 Limited Access Program

Federal lobster permit holders may submit applications for Area 2 and Outer Cape Area eligibility during a 6-month period beginning May 7, 2014, and ending November 3, 2014. NMFS will review the applications and notify applicants of their eligibility and trap allocations during the 2014 Federal fishing year, and those decisions will take effect at the start of the 2015 Federal fishing year, on May 1, 2015. All Federal lobster permit holders may elect Area 2 and/or the Outer Cape Area on their 2014 Federal lobster permit and fish with traps in these areas during the 2014 Federal fishing year, which begins May 1, 2014, and ends April 30, 2015. However, starting May 1, 2015, only those with qualified permits may designate and fish in Area 2 and/or the Outer Cape Area.

This final rule requires that all qualification applications for the Area 2 and Outer Cape Area limited access program must be submitted by November 3, 2014. Late applications will not be considered.

4. Individual Transferable Trap Program (ITT, Trap Transfer Program)

NMFS will implement an optional Trap Transfer Program for Areas 2, 3, and the Outer Cape Area in a manner consistent with the Commission's recommendations. The Program will allow qualified permit holders to sell portions of their trap allocation to other Federal lobster permit holders. Buyers can purchase traps up to the area's trap cap, with 10 percent of the transferred allocation debited and retired from the fishery as a conservation tax. The Trap Transfer Program affords buyers and sellers the flexibility opportunity to scale their businesses to optimum efficiency.

Under the Trap Transfer Program, NMFS will allow a dual state and Federal permit holder to purchase Federal trap allocation from any other dual Federal lobster permit holder. NMFS will require that the transferring parties' state/Federal allocation be synchronized at the end of the transaction. A dual permit holder can purchase a Federal allocation from an individual in another state, as well as an equal state-only allocation from a third individual in his or her own state for the purpose of matching the purchaser's state and Federal trap allocations. Any participants holding both state and Federal lobster permits (''dual permit holders'') with different trap allocations must agree to abide by the lower of the two trap allocations to take part in the program. In this way, permit holders will not be obliged to forfeit their higher trap allocation, but they will not be able to participate in the Trap Transfer Program if they choose to retain it. This will synchronize the dual permit holder's allocations at the initial opt-in time, thus greatly facilitating the tracking of the transferred traps. As trap allocations are transferred, a centralized Trap Transfer Database accessible by all jurisdictions will keep track of trap transfers, thus ensuring that all jurisdictions are operating with the same numbers at the beginning and end of every trap transfer period. The centralized Trap Transfer Database is created by the Atlantic Coastal Cooperative Statistics Program (ACCSP) and is a critical, foundational prerequisite to the Trap Transfer Program.

The timeline to submit an application for the Trap Transfer Program for its first year will be announced in a separate **Federal Register** notice once NMFS is assured that the Commission's Trap Tag Database is fully functional.

Comments and Responses

NMFS received 17 comments relevant to this action. During the proposed rule comment period from June 12, 2013, through July 29, 2013, NMFS received multiple comments from seven persons or entities, which are broken down as follows: One from a Massachusetts lobster fisher; one from a Rhode Island lobster fisher; one from a New Jersey lobster fisher; one from the Rhode Island Lobstermen's Association; one from the Atlantic Offshore Lobstermen's Association; one from the Maine Lobstermen's Association; and one from the Atlantic States Marine Fisheries Commission. All seven of these commenters supported the proposed rule. In addition to the comments received in direct response to the proposed rule, NMFS received a second comment letter from the Commission and a comment from a Board member who is the Director of the Connecticut Department of Environmental Protection. Both submissions were sent in response to a separate NMFS lobster action and received after the proposed rule comment period had closed. However, because the proposed rule comment period did not coincide with any of the Commission's regularly scheduled Lobster Management Board meetings, the Board was not able to meet as a group and discuss the proposed rule until after the comment period ended. With respect to this timing, and given the relevance of these comments to the final rule measures, the comments were considered in the development of this action, and NMFS' responses are provided in this section. The specific comments and responses are as follows.

Comment 1: Two industry associations, the Commission, and one individual lobster fisher commented in support of a 10-percent allocation tax on full business transfers. A full business transfer refers to the transfer of a Federal lobster fishing permit and all of its trap allocation to another vessel. The Commission suggested that the transfer tax on full business transfers could result in fewer vertical lines in the water, which could benefit right whales, as well as assist in the rebuilding of the Southern New England (SNE) lobster stock.

Response: NMFS will not require a 10-percent trap allocation reduction on full business transfers at this time. The Commission's Lobster Plan is presently not designed to accommodate such a measure. The measure presupposes that the transferring lobster permit holder will have an allocation to debit by 10 percent. While that is the case in most lobster management areas (those for which qualified permit holders are allocated a number of traps based on their fishing history), it is not true for Area 1, which is by far the largest lobster area both in terms of participants and business transfers conducted. Area 1 has only a trap cap, and anyone with a Federal lobster permit that qualified for Area 1 may fish up to 800 traps in Area 1; therefore, there is no trap allocation to debit. NMFS' proposed rule specifically asked for comment on this issue, and neither Maine nor the Commission asked NMFS to convert the Area 1 trap cap to an individual allocation. Nor did Maine indicate that it would change its trap cap in state waters to an individual trap allocation, which would be necessary to ensure consistency and prevent regulatory disconnects between Maine and NMFS. See response to Comment 5 for additional discussion of this issue.

Comment 2: One lobster fisher commented that failure to implement a full business transfer tax might lead to manipulation of a transfer to avoid the tax. The individual suggested taxing full business transfers only in the areas where transferability occurred.

Response: NMFS disagrees. Lobster permits are not area specific. Federal permit holders can choose to fish in any or all areas for which they are qualified. Permit holders change designations year-to-year; e.g., a permit holder might designate Areas 2 and 3 one year, Area 1 the next year, and non-trap (mobile

gear) fishing the third. This ability to choose multiple areas and change them year-to-year highlights the interconnectedness of the areas and why management measures should not be considered in the vacuum of a single area. Limiting permit holders to a single area—in this instance, to separate out Area 1 fishers so that a transfer tax can occur in other areas—might simplify management and reduce opportunities to manipulate the system, but it would also restrict lobster business flexibility. On balance, NMFS has determined that the potential benefits of such a measure do not outweigh the cost in reduced flexibility.

Comment 3: One lobster fisher and one industry association commented that transfer taxes, such as a 10-percent tax on full business transfers, were a useful tool to prevent the activation of latent effort. A different association and different lobster fisher, however, suggested that past trap cuts and the future Addendum XVIII trap cuts created a relatively lean industry such that a significant activation of latent effort was unlikely.

Response: NMFS does not expect this final rule to increase effort and, therefore, a tax on full business transfers is not necessary to prevent the activation of latent effort. Further, existing trap caps and the 10-percent trap transfer tax provide additional assurance that effort will not increase, as does the Commission's Addendum XVIII trap cuts that the states have implemented and which NMFS proposed (see Advanced Notice of Proposed Rulemaking (78 FR 51131, August 20, 2013)). NMFS discussed the issue of latent trap activation and trap transferability in detail in its proposed rule responses to Comments 7, 13, and 14 (78 FR 35217, June 12, 2013) and those responses remain relevant.

Comment 4: Two people commented in opposition to taxing full business transfers. One of the individuals stated that an owner should be able to transfer a permit in and out of Confirmation of Permit History and among vessels owned by the person without the allocation being taxed. The other individual commented that the taxing of full business transfers could have unintended consequences insofar as an operative definition of ''business'' is unknown and might be interpreted to encompass transfers that industry would not want covered, such adding immediate family members as co-owners or incorporating the business.

Response: This final rule does not tax full business transfers.

Comment 5: One association supported NMFS' proposed Trap Transfer Program, but expressed concern that Program participants from Area 1 would have to forfeit their Area 1 permits. The association suggested that Area 1 permit holders be excluded from implementation of this initial phase of the Trap Transfer Program, but that NMFS allow for future change to the rule in the event that Area 1 adopts permit-based allocations instead of the current trap cap.

Response: This final rule implements the Trap Transfer Program as proposed. Federal lobster permits are not assigned specific fishing areas; fishers with permits can fish with traps in any area for which they have qualified, or fish with non-trap gear anywhere in the EEZ. As such, there is no such thing as a separate Federal ''Area 1 permit.'' Further, the final rule does not automatically disqualify Area 1 participants upon entry into the Trap Transfer Program. Permit holders can purchase allocation and remain qualified for Area 1 and many may choose to do so (e.g., Area 1 individuals with a small Area 3 allocation may seek additional Area 3 allocation in order to designate Areas 1 and 3 on their license without the Most Restrictive Rule making such a designation economically unfeasible). Area 1 qualifiers would, however, forfeit their Area 1 eligibility if they choose to sell traps. As discussed in the response to Comment 1, there is presently no way to debit Area 1 traps and prevent an expansion of fishing effort other than to altogether restrict that person from fishing in Area 1 in such a circumstance. On balance, NMFS asserts the Program benefits to Area 1 trap buyers outweigh the negatives to Area 1 trap sellers. Selling traps is optional and may, in some circumstances, represent the best course of action for an Area 1 business. The rule allows Area 1 qualifiers to weigh the consequences, analyze what is best for them, and act accordingly.

Comment 6: One business association and one lobster fisher opposed the proposed rule's treatment of multi-area trap history, commenting that transferred allocation should retain its history and that trap transfer recipients should be allowed to fish in any area for which that trap allocation qualified. A different association supported the proposed rule, commenting that the recipient of allocation with multi-area trap history should be required to choose a single area, but that the allocation's multi-area history be retained in the lobster database. The Commission wrote in favor of allowing those who purchase traps with multi-area history to fish the traps in all the areas for which they are qualified.

Response: This final rule allows recipients of trap allocations with multi-area history to retain and use that trap history to fish in multiple areas. This is a change from the proposed rule, which proposed that transfer recipients of multi-area allocation had to forever assign a single area to that allocation. The change provides lobster businesses with greater flexibility to potentially fish in multiple areas. The proposed version followed Commission Addendum XII, which recommended paring down a multi-area trap allocation to a single area. Addendum XII's recommendation was predicated on a perceived need to keep things simple for the Trap Tag Database. Since that time, however, the ACCSP's Lobster Trap Transfer Database subcommittee indicated that it can develop a database that can track multi-area trap allocation history. With that new development, the Commission rescinded its Addendum XII recommendation on August 6, 2013, when it approved Addendum XXI. Addendum XXI incorporates into the Lobster Plan a provision to allow the declaration of multi-area history for transferred traps. To be compatible with Addendum XXI, the final rule withdraws this proposed requirement and retains the status quo; i.e., trap fishers can fish traps in all the areas for which the trap has qualified.

Comment 7: Commenters universally supported the need for a centralized database that can keep track of all permit allocations and transfers. These commenters generally indicated that the database needs to be fully functional and tested before transferability can begin. One association went so far as to state that transferability cannot be expected to progress without it.

Response: NMFS agrees and has repeatedly stated at Commission Lobster Board meetings that a fully developed and properly functioning trap allocation database is a necessary prerequisite to any trap transfer program.

Comment 8: One lobster fisher commented that, although the database needs to be fully functioning prior to the start of a trap transfer program, the database should not be allowed to hold up the implementation of trap transferability and that NMFS be forceful in making sure the database is completed and tested on time.

Response: NMFS agrees that the database must be fully functional prior to the start of the Trap Transfer Program and understands that the industry wants the Trap Transfer Program in place as soon as possible.

NMFS will begin the qualification and allocation process for Federal lobster permits in Area 2 and the Outer Cape

Area. The final rule also sets forth the Trap Transfer Program. When the completion and release date of the database is known, NMFS will file a subsequent notice that will establish the timeline and effective dates for the Trap Transfer Program.

Comment 9: One lobster fisher commented that the Addendum XVIII trap cuts will potentially be devastating to industry and that they need the Trap Transfer Program to mitigate the trap cut impacts.

Response: This final rule establishes the Trap Transfer Program; however, the effective date for this program has been postponed pending the completion of the Trap Transfer Database. The proposed trap cuts are the subject of a separate rulemaking action, and NMFS intends to coordinate the timing of the Trap Transfer Program to allow fishermen to utilize it as a means of mitigating the potential economic effects of the proposed trap cuts. NMFS has no plans to implement the trap cuts prior to full implementation of the Trap Transfer Program.

Comment 10: Commenters universally supported the Trap Transfer Program and urged that it be implemented as soon as possible.

Response: NMFS agrees and intends to implement the Trap Transfer Program as soon as it is reasonable and practicable.

Comment 11: One association commented that trap cuts should precede transferability so that ''inactive traps don't get reactivated.''

Response: One potential benefit to having trap cuts precede transferability is that the trap cuts would remove effort—including potentially latent effort—before it could be transferred. However, NMFS does not expect the activation of latent effort to be a significant issue in this matter (see response to Comment 3). Given that latent effort is not expected to be significant, NMFS is implementing the Trap Transfer Program in this action; any trap reductions will be implemented through a separate rulemaking.

Comment 12: One association said that trap cuts should happen after transferability; a different commenter offered that cutting traps during transferability was also a viable option.

Response: NMFS is establishing the Trap Transfer Program through this action, to be effective as soon as practicable. Under a separate rulemaking action, NMFS will analyze various options for the implementation of the trap cuts in consideration of the Trap Transfer Program.

Comment 13: A number of commenters suggested that NMFS extend the trap tag expiration date and delay the issuance of trap tags beyond the new fishing year so that new trap allocations, trap cuts, and the next trap tag cycle can become linked.

Response: NMFS disagrees, and this final rule takes no steps to extend the trap tag expiration date or to delay the issuance of trap tags. Variables such as the trap tag ordering dates (February for Federal permit holders, December for Massachusetts, and other months for other states) and differing start dates for the fishing year (May 1 for Federal permit holders, January 1 or July 1 for the states) illustrate the tremendous logistical challenge that exists to begin a new program in a coordinated fashion. However, NMFS does not consider extending the trap tag expiration date to be necessary. Most commenters' desire to hurry transferability and/or to alter variables such as trap tag issuance is so lobster fishers will not be forced to endure trap cuts while waiting for the NMFS Trap Transfer Program to be finalized. Addendum XVIII states that trap cuts cannot be enacted until NMFS implements its transferability plan. The final rule anticipates that date to be the start of the 2015 Federal fishing year, which will provide sufficient time to account for trap cuts and process transferred trap allocation.

Comment 14: Numerous commenters supported allowing buyers to purchase allocation above an area trap cap, which would be unfishable, but which could be drawn upon and activated if trap cuts lowered a fisher's allocation below the cap.

Response: This concept—referred to as ''trap banking'' in earlier Commission documents—was approved for Area 2 in Addendum XXI in August 2013, and for Area 3 in Addendum XXII in October 2013. NMFS plans to consider trap banking under a separate future rulemaking. NMFS analyzed the issue preliminarily in its FEIS and concluded that implementing the Trap Transfer Program without trap banking will not undermine the Trap Transfer Program, nor would it necessarily prevent trap banking from being added to the Program in the future if the Commission decided to recommend such.

Comment 15: One association and one lobster fisher commented in support of increasing the Area 3 trap cap to 2,000 traps. The Commission's Lobster Board adopted the 2,000 trap cap for Area 3 in Addendum XIV to the Lobster Plan on May 5, 2009, and perpetuated this measure when it approved Addendum XXI on August 6, 2013. Addendum XXI adopted a 5-year trap cap reduction schedule for Area 3, starting at 2,000 traps. Consequently, the Commission recommended that NMFS align with the Area 3 trap cap to coincide with the 2,000-trap cap in the Lobster Plan.

Response: This final rule will not change the Area 3 trap cap in the Federal regulations, which is currently set at 1,945 traps. The FEIS for this action did not analyze the change in the trap cap for Area 3, and NMFS is analyzing this measure in concert with the trap reductions for Area 2 and Area 3, as well as the other measures adopted by the Commission in Addenda XVII and XVIII, which were intended to address the recruitment failure in the SNE lobster stock. NMFS asserts that the adoption of the 2,000-trap cap should be assessed within the context of the 5-year trap cap reductions under Addendum XVIII, which are outside the scope of this rulemaking.

Comment 16: The Connecticut Department of Environmental Protection recommended that the trap transfer process be conducted in a manner that allows for the fair participation of all citizens, and should be done in an open forum and in conjunction with the Commission's Trap Transfer Database.

Response: NMFS intends for the Trap Transfer Program to be open and accessible. The Program, however, is new, and participant behavior and response is unknowable at this point. NMFS does not want to introduce variables that could engineer market behavior in response to a problem that may not exist. NMFS will monitor its Trap Transfer Program and agrees with the commenter that the agency should, and will, work with the Commission to investigate ways to make available transferable trap allocations known and accessible to participants.

Comment 17: The Commission agreed that all Federal lobster permit holders be allowed to purchase transferable trap allocations for Areas 2, 3, and the Outer Cape Area.

Response: NMFS agrees and adopted this measure as part of the Trap Transfer Program to allow those Federal lobster permit holders who do not initially qualify for the trap fishery in these areas to obtain access through the purchase of transferable traps.

Changes From the Proposed Rule

NMFS made some minor changes to the final rule to allow for more consistency with the Commission's Plan and to facilitate the administrative effectiveness in carrying out the new measures.

The proposed rule would have restricted the buyer of a trap with a multi-area history to electing only one

management area in which to fish that trap, with the history in the other areas retired permanently. Instead, this final rule continues the status quo, which allows a Federal lobster permit holder to elect any and all areas for which the transferred traps have history. NMFS did not receive any comments to suggest that the retention of multi-area trap history be disallowed, and members of the industry wrote in support of retention of multi-area trap history.

The proposed rule suggested that trap transferability would begin 150 days after the publication of the final rule. However, the completion date of the Commission's Trap Transfer Database remains uncertain. Therefore, although this final rule establishes the Trap Transfer Program, the exact dates for the administrative transfer of traps (trap transfer period) will be announced in a subsequent **Federal Register** notice once NMFS has full assurance that the database is ready to track and administer trap transfers by dual permit holders. Depending on the availability of the database, Federal lobster permit holders may be able to transfer traps beginning in the fall of 2014, with those transactions taking effect on May 1, 2015.

Finally, NMFS made minor changes to the regulatory text in § 697.19(b) through (f) to clarify that Federal lobster vessels with trap gear designations for Areas 2, 3, 4, 5, and the Outer Cape Area are limited to the number of traps allocated by the Regional Administrator and, although this allocation may vary, in no case shall it exceed the trap limit.

Classification

The Administrator, Greater Atlantic Region, NMFS, determined that this final rule is necessary for the conservation and management of the American lobster fishery and that it is consistent with the provisions of the Atlantic Coastal Act, the National Standards of the Magnuson-Stevens Act, and other applicable laws.

NMFS prepared an FEIS for this action. The FEIS was filed with the Environmental Protection Agency on December 13, 2013. A notice of availability was published on December 20, 2013 (78 FR 77121). In approving this action, NMFS issued a record of decision (ROD) identifying the selected alternatives. A copy of the ROD is available from NMFS (see **ADDRESSES**).

This final rule has been determined to be not significant for the purposes of Executive Order (E.O.) 12866.

A FRFA was prepared for this action. The FRFA incorporates the IRFA, a summary of the significant issues raised by the public comments in response to the IRFA, and NMFS' responses to those comments, and a summary of the analysis completed to support the action. A copy of this analysis is available from NMFS (see **ADDRESSES**). A summary of the FRFA follows.

Summary of the Significant Issues Raised by the Public in Response to the IRFA, a Summary of the Agency's Assessment of Such Issues, and a Statement of All Changes Made in the Final Rule as a Result of Such Comments

None of the public comments we received regarding this rulemaking action raised any significant or new issues that resulted in NMFS changing course with respect to the major elements of the proposed rule. We received a total of 17 comments from 8 different commenters, and all generally supported the implementation of a limited access program for the Area 2 and Outer Cape Area and the Trap Transfer Program. None of the comments raised any significant issues with the IRFA or its supporting analyses. For a complete description of the comments received and NMFS's responses to those comments, see the COMMENTS AND RESPONSES section of this preamble.

Description and Estimate of the Number of Small Entities To Which the Final Rule Applies

The regulated entities affected by this action include small entities engaged in the commercial lobster trap fishery. On June 20, 2013, the Small Business Administration (SBA) issued a final rule revising the small business size standards for several industries, effective July 22, 2013 (78 FR 37398). That final rule increased the small entity size standard based on gross sales for finfish fishing from $4 million to $19 million, shellfish fishing from $4 million to $5 million, and other marine fishing from $4 million to $7 million. Pursuant to the RFA, and prior to SBA's June 20, 2013, final rule, a FRFA analysis was conducted for this action using SBA's former size standards. NMFS has reviewed the analyses prepared for this action in light of the new standards. NMFS has determined that the new size standards do not affect the analyses prepared for this action because all Federal lobster permit holders remain categorized as small entities under both the old and new SBA small business size standards.

This final rule would potentially affect any fishing vessel using trap gear that holds a Federal lobster permit. Despite the increase in the threshold for the SBA size standard for commercial fishing, all operating units in the commercial lobster fishery are considered small businesses for the purposes of this FRFA. According to dealer records no single lobster vessel would exceed $4 million in gross sales. In 2012, there were a total of 3,047 Federal lobster permits, of which 2,750 were active. The remaining 297 were in Confirmation of Permit History status and, therefore, inactive. Of those active permits in 2012, 575 were issued a non-trap only lobster permit, 1,860 were issued a trap only lobster permit, and 315 were issued both a non-trap and trap gear designation. Some individuals own multiple operating units, so it is possible that affiliated vessels would be classified as a large entity under the SBA size standard. However, the required ownership documentation submitted with the permit application was not adequate to reliably identify affiliated ownership. Therefore, all operating units in the commercial lobster fishery are considered small entities for purposes of analysis.

Description of Projected Reporting, Recordkeeping, and Other Compliance Requirements

This final rule contains a collection of information requirement subject to review and approval by the Office of Management and Budget (OMB) under the Paperwork Reduction Act (PRA). A PRA analysis, including a revised Form 83i and supporting statement, have been reviewed and approved under OMB control number 0648–0673. There are five types of respondents characterized in the PRA analysis. Group 1 applicants are those for whom NMFS has data on hand to show that their permits meet the eligibility criteria for one or both of the Outer Cape Area and Area 2. These permit holders will still need to apply by submitting an application form to NMFS agreeing with the NMFS assessment of their eligibility based on the state data. Group 2 applicants are the subset of Group 1 pre-qualifiers who do not agree with the NMFS pre-determination of the areas for which they are eligible and/or the corresponding trap allocations. These applicants will be required to submit the application form, but would also need to provide additional documentation to support their disagreement with NMFS' assessment of their permits' eligibility. Group 3 applicants are those Federal lobster permit holders for whom there are no state data available to show that their permits meet the eligibility criteria for either Area 2 or the Outer Cape Area and who, consequently, have no trap allocation for either area based on

NMFS's review of the state-supplied data. Permit holders in this group may still apply for eligibility, but must submit, along with their application forms, documentation to support their claim of eligibility and trap allocation for the relevant areas. Group 4 applicants are those who apply for access to either Area 2 and/or the Outer Cape Area, are deemed ineligible (a subset of Groups 2 and 3), and appeal the decision based on a military, medical, or technical issue. Group 5 applicants consist of those who fall under the Director's Appeal.

Description of the Steps the Agency Has Taken To Minimize the Economic Impact on Small Entities Consistent With the Stated Objectives of Applicable Statutes

NMFS took several steps to minimize the burden of this action on small entities. First, we deferred the implementation of the Trap Transfer Program until the Commission's Trap Transfer Database is proven to be ready to track the transfers. The database is critical to the effective implementation of the Program and critical to allowing the necessary communication between NMFS and the states to be sure that the transfers are administered properly. Allowing transferability to begin prior to the completion of the database would have increased the likelihood of problems in the tracking of the transfers, which could inconvenience permit holders and severely complicate the trap transfer process. Further, the Program will give ample time for permit holders to plan for their trap transfer transactions. It will give time for trap buyers to locate trap sellers, negotiate a price, make an agreement, and have that agreement affirmed by the affected states and NMFS so that the new allocations can be easily effectuated at the start of the 2015 Federal fishing year.

Second, NMFS will allow all Federal lobster permit holders to maintain their ability to elect to fish with traps in Area 2 and the Outer Cape Area during the entire 2014 fishing year while NMFS makes qualification and allocation decisions on applications for these areas. This will allow for a more seamless implementation of the new eligibility and allocation decisions, effective at the start of the 2015 Federal fishing year. If NMFS tried to activate qualification and allocation decisions during the 2014 fishing year, after fishermen declared their areas, were issued trap tags, and issued state licenses, it would cause confusion amongst the fishermen and the affected state and Federal agencies and could complicate enforcement of trap limits and other lobster management measures.

NMFS will alleviate the burden on permit holders by attempting to align with allocative and eligibility decisions that the states have already made on dual permit holders. Since a dual permit holder's Federal and state fishing history are one and the same, NMFS will accept the state's decision as a valid form of eligibility. Those who have been qualified by their state will be notified by NMFS that information exists to suggest that they qualify, which will substantially reduce the burden on applicants who would otherwise need to provide documents in support of the eligibility criteria.

Recognizing that some permit holders have already transferred traps or may have different allocations than what NMFS can acknowledge, we incorporated a Director's Appeal provision into the qualification and allocation process. In the event that an allocation decision cannot be adopted by NMFS, the applicant's state fisheries director can appeal on his or her behalf and declare why allowing the applicant to qualify or have a certain allocation will benefit the industry and resource. In the event that a permit holder's state and Federal allocations do not align, the permit holder may opt to maintain the higher of the two allocations, but he or she would be prohibited from transferring traps.

Small Business Regulatory Enforcement and Fairness Act

Section 212 of the Small Business Regulatory Enforcement and Fairness Act of 1996 states that, for each rule or group of related rules for which an agency is required to prepare a FRFA, the agency will publish one or more guides to assist small entities in complying with the rule, and will designate such publications as ''small entity compliance guides.'' The agency will explain the actions a small entity is required to take to comply with a rule or group of rules. As part of this rulemaking process, a letter to permit holders that also serves as a small entity compliance guide was prepared. Copies of this final rule are available from the Greater Atlantic Regional Fisheries Office, and the small entity compliance guide will be sent to all Federal lobster permit holders. The small entity compliance guide and this final rule will be available upon request and will be posted on the Greater Atlantic Regional Fisheries Office Web site at *http://www.nero.noaa.gov/sfd/lobster.*

Paperwork Reduction Act

This final rule contains a collection-of-information requirement subject to the Paperwork Reduction Act (PRA) and which has been approved by OMB under control number 0648–0673. Public reporting burden for this action is estimated as follows, including the time for reviewing instructions, searching existing data sources, gathering and maintaining the data needed, and completing and reviewing the collection of information:

- For Group 1 applicants to the Outer Cape and/or Area 2 Limited Access Program—2 min per response;
- For Group 2 and 3 applicants to the Outer Cape and/or Area 2 Limited Access Program—22 min per response;
- For Group 4 applicants to the Outer Cape and/or Area 2 Limited Access Program—30 min per response;
- For Group 5 applicants to the Outer Cape and/or Area 2 Limited Access Program—20 min per response; and
- For Trap Transfer Requests—10 min per response.

Send comments regarding these burden estimates or any other aspect of this data collection, including suggestions for reducing the burden, to NMFS (see ADDRESSES) and by email to *OIRA_Submission@omb.eop.gov,* or fax to 202–395–7285.

Notwithstanding any other provision of the law, no person is required to respond to, and no person shall be subject to the penalty for failure to comply with, a collection of information subject to the requirements of the PRA, unless that collection of information displays a currently valid OMB control number.

List of Subjects in 50 CFR Part 697

Fisheries, fishing.

Dated: March 31, 2014.

Samuel D. Rauch III,

Deputy Assistant Administrator for Regulatory Programs, National Marine Fisheries Service.

For the reasons set out in the preamble, 50 CFR part 697 is amended as follows:

PART 697—ATLANTIC COASTAL FISHERIES COOPERATIVE MANAGEMENT

■ 1. The authority citation for part 697 continues to read as follows:

Authority: 16 U.S.C. 5101 *et seq.*

■ 2. In § 697.4, revise paragraph (a)(7)(ii), remove paragraphs (a)(7)(vii) through (xi), and add new paragraphs (a)(7)(vii) and (viii) to read as follows:

§ 697.4 Vessel permits and trap tags.

(a) * * *

(7) * * *

(ii) Each owner of a fishing vessel that fishes with traps capable of catching lobster must declare to NMFS in his/her annual application for permit renewal which management areas, as described in § 697.18, the vessel will fish in for lobster with trap gear during that fishing season. The ability to declare into Lobster Conservation Management Areas 1, 2, 3, 4, 5, and/or the Outer Cape Management Area, is first contingent upon a one-time initial qualification. The Area 3, 4, and 5 qualification programs are concluded and the Area 1, 2, and Outer Cape Area qualification programs are set forth in paragraphs (a)(7)(vi) through (a)(7)(viii) of this section.

* * * * *

(vii) *Participation requirements for EEZ Nearshore Outer Cape Area (Outer Cape Area).* To fish for lobster with traps in the EEZ portion of the Outer Cape Area, a Federal lobster permit holder must apply for access in an application to the Regional Administrator. The application process is set forth as follows:

(A) *Qualification criteria.* To initially qualify into the EEZ portion of the Outer Cape Area, the applicant must establish with documentary proof the following:

(*1*) That the applicant possesses a current Federal lobster permit;

(*2*) That the applicant landed lobster caught in traps from the Outer Cape Area in either 1999, 2000, or 2001. Whichever year used shall be considered the qualifying year for the purposes of establishing the applicant's Outer Cape Area trap allocation;

(B) *Trap allocation criteria.* To receive a trap allocation for the EEZ portion of the Outer Cape Area, the qualified applicant must also establish with documentary proof the following:

(*1*) The number of lobster traps fished by the qualifying vessel in 2000, 2001, and 2002; and

(*2*) The total pounds of lobster landed in 2000, 2001, and 2002.

(C) *Trap allocation formula.* The Regional Administrator shall allocate traps for use in the Outer Cape Area based upon the applicant's highest level of Effective Traps Fished during the qualifying year. Effective Traps Fished shall be the lower value of the maximum number of traps reported fished for that qualifying year compared to the predicted number of traps that is required to catch the reported poundage of lobsters for that year as set forth in the Commission's allocation formula identified in Addendum XIII to Amendment 3 of the Commission's Interstate Fishery Management Plan for American Lobster.

(D) *Documentary proof.* To satisfy the Outer Cape Area Qualification and Trap Allocation Criteria set forth in paragraphs (a)(7)(vii)(A) and (B) of this section, the applicants will be limited to the following documentary proof:

(*1*) As proof of a valid Federal lobster permit, the applicant must provide a copy of the vessel's current Federal lobster permit. The potential qualifier may, in lieu of providing a copy, provide NMFS with such data that will allow NMFS to identify the Federal lobster permit in its database, which will at a minimum include: The applicant's name and address; vessel name; and permit number.

(*2*) As proof of traps fished in the Outer Cape Area and lobsters landed from the Outer Cape Area in 2000, 2001, or 2002, the applicant must provide the documentation reported to the state of the traps fished and lobsters landed during any of those years, as follows:

(*i*) *State records.* An applicant must provide documentation of his or her state reported traps fished and lobster landings in 2000, 2001, or 2002. The Regional Administrator shall presume that the permit holder was truthful and accurate when reporting to his or her state the traps fished and lobster landed in 2000, 2001, and 2002, and that the state records of such are the best evidence of traps fished and lobster landed during those years.

(*ii*) *State decision.* An applicant may provide his or her state's qualification and allocation decision to satisfy the documentary requirements of this section. The Regional Administrator shall accept a state's qualification and allocation decision as prima facie evidence in support of the Federal qualification and allocation decision. The Regional Administrator shall presume that the state decision is appropriate, but that presumption is rebuttable and the Regional Administrator may choose to disallow the use of the state decision if the state decision was incorrect or based on factors other than those set forth in this section. This state decision may include not only the initial state qualification and allocation decision, but may also incorporate state trap transfer decisions that the state allowed since the time of the initial allocation decision.

(*iii*) *States lacking reporting.* An applicant may provide Federal vessel trip reports, dealer records, or captain's logbook as documentation in lieu of state records if the applicant can establish by clear and convincing evidence that the involved state did not require the permit holder to report traps or landings during 2000, 2001, or 2002.

(E) *Application period.* Applicants will have 180 days to submit an application. The time period for submitting an application for access to the EEZ portion of the Outer Cape Area begins on May 7, 2014 (application period start date) and ends November 3, 2014. Failure to apply for Outer Cape Management Area access by that date shall be considered a waiver of any future claim for trap fishery access into the Outer Cape Area.

(F) *Appeal of denial of permit.* Any applicant having first applied for initial qualification into the Outer Cape Area trap fishery pursuant to this section, but having been denied access or allocation, may appeal to the Regional Administrator within 45 days of the date indicated on the notice of denial. Any such appeal must be in writing. Appeals may be submitted in the following two situations:

(*1*) *Clerical Appeal.* The grounds for Clerical Appeal shall be that the Regional Administrator erred clerically in concluding that the vessel did not meet the criteria in paragraph (a)(7)(vii) of this section. Errors arising from oversight or omission such as ministerial, mathematical, or typographical mistakes would form the basis of such an appeal. Alleged errors in substance or judgment do not form a sufficient basis of appeal under this paragraph. The appeal must set forth the basis for the applicant's belief that the Regional Administrator's decision was made in error. If the appealing applicant does not clearly and convincingly prove that an error occurred, the appeal must be denied.

(*2*) *Director's Appeal.* A state's marine fisheries agency may appeal on behalf of one of its state permit holders. The only grounds for a Director's Appeal shall be that the Regional Administrator's decision on a dual permit holder's Federal permit has created a detrimental incongruence with the state's earlier decision on that permit holder's state permit. In order to pursue a Director's Appeal, the state must establish the following by a preponderance of the evidence:

(*i*) *Proof of an incongruence.* The state must establish that the individual has a state lobster permit that the state has qualified for access with traps into the Outer Cape Area, as well as a Federal lobster permit that the Regional Administrator has denied access or restricted the permit's trap allocation into the Outer Cape Area. The state must establish that the incongruent permits were linked during the year or years used in the initial application

such that the fishing history used in Federal and state permit decisions was the same.

(*ii*) *Proof of detriment.* The state must provide a letter supporting the granting of trap access for the Federal permit holder. In the support letter, the state must explain how the incongruence in this instance is detrimental to the Outer Cape Area lobster fishery and why granting the appeal is, on balance, in the best interests of the fishery overall. A showing of detriment to the individual permit holder is not grounds for this appeal and will not be considered relevant to the decision.

(G) *Appellate timing and review.* All appeals must be submitted to the Regional Administrator in writing and reviewed as follows:

(*1*) *Clerical Appeals timing.* Applicants must submit Clerical Appeals no later than 45 days after the date on the NMFS Notice of Denial of the Initial Qualification Application. NMFS shall consider the appeal's postmark date as constituting the submission date for the purposes of determining timing. Failure to register an appeal within 45 days of the date of the Notice of Denial will preclude any further appeal. The appellant may notify the Regional Administrator in writing of his or her intent to appeal within the 45 days and request a time extension to procure the necessary documentation. Time extensions shall be limited to 30 days and shall be calculated as extending 30 days beyond the initial 45-day period that begins on the original date on the Notice of Denial. Appeals submitted beyond the deadlines stated herein will not be accepted.

(*2*) *Director's Appeals timing.* State Directors must submit Director's Appeals on behalf of their constituents no later than 180 days after the date of the NMFS Notice of Denial of the Initial Qualification Application. NMFS shall consider the appeal's postmark date as constituting the submission date for the purposes of determining timing. Failure to register an appeal within 180 days of the date of the Notice of Denial will preclude any further appeal. The Director may notify the Regional Administrator in writing of his or her intent to appeal within the 180 days and request a time extension to procure the necessary documentation. Time extensions shall be limited to 30 days and shall be calculated as extending 30 days beyond the initial 180-day period that begins on the original date on the Notice of Denial. Appeals submitted beyond the deadline will not be accepted.

(*3*) *Agency response.* Upon receipt of a complete written appeal with supporting documentation in the time frame allowable, the Regional Administrator will then appoint an appeals officer who will review the appellate documentation. After completing a review of the appeal, the appeals officer will make findings and a recommendation, which shall be advisory only, to the Regional Administrator, who shall make the final agency decision whether to qualify the applicant.

(H) *Status of vessels pending appeal.* The Regional Administrator may authorize a vessel to fish with traps in the Outer Cape Area during an appeal. The Regional Administrator may do so by issuing a letter authorizing the appellant to fish up to 800 traps in the Outer Cape Area during the pendency of the appeal. The Regional Administrator's letter must be present onboard the vessel while it is engaged in such fishing in order for the vessel to be authorized. If the appeal is ultimately denied, the Regional Administrator's letter authorizing fishing during the appeal will become invalid 5 days after receipt of the notice of appellate denial, or 15 days after the date on the notice of appellate denial, whichever occurs first.

(viii) *Participation requirements for EEZ nearshore lobster management area 2 (Area 2).* To fish for lobster with traps in the EEZ portion of Area 2, a Federal lobster permit holder must apply for access in an application to the Regional Administrator. The application process is as follows:

(A) *Qualification criteria.* To initially qualify into the EEZ portion of Area 2, the applicant must establish with documentary proof the following:

(*1*) That the applicant possesses a current Federal lobster permit;

(*2*) That the applicant landed lobster caught in traps from Area 2 in 2001, 2002, or 2003. Whichever year used shall be considered the qualifying year for the purposes of establishing the applicant's Area 2 trap allocation;

(B) *Trap allocation criteria.* To receive a trap allocation for the EEZ portion of Area 2, the qualified applicant must also establish with documentary proof the following:

(*1*) The number of lobster traps fished by the qualifying vessel in the qualifying year; and

(*2*) The total pounds of lobster landed during that qualifying year.

(C) *Trap allocation formula.* The Regional Administrator shall allocate traps for use in Area 2 based upon the applicant's highest level of Effective Traps Fished during the qualifying year. Effective Traps Fished shall be the lower value of the maximum number of traps reported fished for that qualifying year compared to the predicted number of traps that is required to catch the reported poundage of lobsters for that year as set forth in the Commission's allocation formula identified in Addendum VII to Amendment 3 of the Commission's Interstate Fishery Management Plan for American Lobster.

(D) *Documentary proof.* To satisfy the Area 2 Qualification and Trap Allocation Criteria set forth in paragraphs (a)(7)(viii)(A) and (B) of this section, the applicants will be limited to the following documentary proof:

(*1*) As proof of a valid Federal lobster permit, the applicant must provide a copy of the vessel's current Federal lobster permit. The potential qualifier may, in lieu of providing a copy, provide NMFS with such data that will allow NMFS to identify the Federal lobster permit in its database, which will at a minimum include: The applicant's name and address; vessel name; and permit number.

(*2*) As proof of traps fished in Area 2 and lobsters landed from Area 2 in 2001, 2002, or 2003, the applicant must provide the documentation reported to the state of the traps fished and lobsters landed during any of those years as follows:

(*i*) *State records.* An applicant must provide documentation of his or her state reported traps fished and lobster landings in 2001, 2002, or 2003. The landings must have occurred in a state adjacent to Area 2, which the Regional Administrator shall presume to be limited to Massachusetts, Rhode Island, Connecticut, and/or New York. The Regional Administrator shall presume that the permit holder was truthful and accurate when reporting to his or her state the traps fished and lobster landed in 2001, 2002, and 2003 and that the state records of such are the best evidence of traps fished and lobster landed during those years.

(*ii*) *State decision.* An applicant may provide his or her state's qualification and allocation decision to satisfy the documentary requirements of this section. The Regional Administrator shall accept a state's qualification and allocation decision as prima facie evidence in support of the Federal qualification and allocation decision. The Regional Administrator shall presume that the state decision is appropriate, but that presumption is rebuttable and the Regional Administrator may choose to disallow the use of the state decision if the state decision was incorrect or based on factors other than those set forth in this section. This state decision may include not only the initial state qualification

and allocation decision, but may also incorporate state trap transfer decisions that the state allowed since the time of the initial allocation decision.

(*iii*) *States lacking reporting.* An applicant may provide Federal vessel trip reports, dealer records, or captain's logbook as documentation in lieu of state records if the applicant can establish by clear and convincing evidence that the involved state did not require the permit holder to report traps or landings during 2001, 2002, or 2003.

(E) *Application period.* Applicants will have 180 days to submit an application. The time period for submitting an application for access to the EEZ portion of Area 2 begins on May 7, 2014 (application period start date) and ends November 3, 2014. Failure to apply for Area 2 access by that date shall be considered a waiver of any future claim for trap fishery access into Area 2.

(F) *Appeal of denial of permit.* Any applicant having first applied for initial qualification into the Area 2 trap fishery pursuant to this section, but having been denied access, may appeal to the Regional Administrator within 45 days of the date indicated on the notice of denial. Any such appeal must be in writing. Appeals may be submitted in the following three situations:

(*1*) *Clerical Appeal.* The grounds for Clerical Appeal shall be that the Regional Administrator clerically erred in concluding that the vessel did not meet the criteria in paragraph (a)(7)(viii) of this section. Errors arising from oversight or omission, such as ministerial, mathematical, or typographical mistakes, would form the basis of such an appeal. Alleged errors in substance or judgment do not form a sufficient basis of appeal under this paragraph. The appeal must set forth the basis for the applicant's belief that the Regional Administrator's decision was made in error. If the appealing applicant does not clearly and convincingly prove that an error occurred, the appeal must be denied.

(*2*) *Medical or Military Hardship Appeal.* The grounds for a Hardship Appeal shall be limited to those situations in which medical incapacity or military service prevented a Federal lobster permit holder from fishing for lobster in 2001, 2002, and 2003. If the Federal lobster permit holder is able to prove such a hardship, then the individual shall be granted the additional years of 1999 and 2000 from which to provide documentary proof in order to qualify for and fish traps in Area 2. In order to pursue a Hardship Appeal, the applicant must establish the following by a preponderance of the evidence:

(*i*) *Proof of medical incapacity or military service.* To prove incapacity, the applicant must provide medical documentation from a medical provider, or military service documentation from the military, that establishes that the applicant was incapable of lobster fishing in 2001, 2002, and 2003. An applicant may provide his/her state's qualification and allocation appeals decision to satisfy the documentary requirements of this section. The Regional Administrator shall accept a state's appeals decision as prima facie evidence in support of the Federal decision on the appeal. The Regional Administrator shall presume that the state decision is appropriate, but that presumption is rebuttable and the Regional Administrator may choose to disallow the use of the state decision if the state decision was incorrect or based on factors other than those set forth in this section.

(*ii*) *Proof of Area 2 trap fishing in 1999 and 2000.* To prove a history of Area 2 lobster trap fishing in 1999 and/or 2000, the applicant must provide documentary proof as outlined in paragraph (a)(7)(viii)(D) of this section.

(*3*) *Director's Appeal.* A state's marine fisheries agency may appeal on behalf of one of its state permit holders. The only grounds for a Director's Appeal shall be that the Regional Administrator's decision on a dual permit holder's Federal permit has created a detrimental incongruence with the state's earlier decision on that permit holder's state permit. In order to pursue a Director's Appeal, the state must establish the following by a preponderance of the evidence:

(*i*) *Proof of an incongruence.* The state must establish that the individual has a state lobster permit, which the state has qualified for access with traps into Area 2, as well as a Federal lobster permit, which the Regional Administrator has denied access or restricted the permit's trap allocation into Area 2. The state must establish that the incongruent permits were linked during the year or years used in the initial application such that the fishing history used in Federal and state permit decisions was the same.

(*ii*) *Proof of detriment.* The state must provide a letter supporting the granting of trap access for the Federal permit holder. In the support letter, the state must explain how the incongruence in this instance is detrimental to the Area 2 lobster fishery and why granting the appeal is, on balance, in the best interests of the fishery overall. A showing of detriment to the individual permit holder is not grounds for this appeal and will not be considered relevant to the decision.

(G) *Appellate timing and review.* All appeals must be submitted to the Regional Administrator in writing and reviewed as follows:

(*1*) *Clerical Appeals timing.* Applicants must submit Clerical Appeals no later than 45 days after the date on the NMFS Notice of Denial of the Initial Qualification Application. NMFS shall consider the appeal's postmark date as constituting the submission date for the purposes of determining timing. Failure to register an appeal within 45 days of the date of the Notice of Denial will preclude any further appeal. The appellant may notify the Regional Administrator in writing of his or her intent to appeal within the 45 days and request a time extension to procure the necessary documentation. Time extensions shall be limited to 30 days and shall be calculated as extending 30 days beyond the initial 45-day period that begins on the original date on the Notice of Denial. Appeals submitted beyond the deadlines stated herein will not be accepted.

(*2*) *Medical or Military Hardship Appeals timing.* Applicants must submit Medical or Military Hardship Appeals no later than 45 days after the date on the NMFS Notice of Denial of the Initial Qualification Application. NMFS shall consider the appeal's postmark date as constituting the submission date for the purposes of determining timing. Failure to register an appeal within 45 days of the date of the Notice of Denial will preclude any further appeal. The appellant may notify the Regional Administrator in writing of his or her intent to appeal within the 45 days and request a time extension to procure the necessary documentation. Time extensions shall be limited to 30 days and shall be calculated as extending 30 days beyond the initial 45-day period that begins on the original date on the Notice of Denial. Appeals submitted beyond the deadlines stated herein will not be accepted.

(*3*) *Director's Appeals timing.* State Directors must submit Director's Appeals on behalf of their constituents no later than 180 days after the date of the NMFS Notice of Denial of the Initial Qualification Application. NMFS shall consider the appeal's postmark date as constituting the submission date for the purposes of determining timing. Failure to register an appeal within 180 days of the date of the Notice of Denial will preclude any further appeal. The Director may notify the Regional Administrator in writing of his or her intent to appeal within the 180 days and

request a time extension to procure the necessary documentation. Time extensions shall be limited to 30 days and shall be calculated as extending 30 days beyond the initial 180-day period that begins on the original date on the Notice of Denial. Appeals submitted beyond the deadline will not be accepted.

(*4*) *Agency response.* Upon receipt of a complete written appeal with supporting documentation in the time frame allowable, the Regional Administrator will appoint an appeals officer who will review the appellate documentation. After completing a review of the appeal, the appeals officer will make findings and a recommendation, which shall be advisory only, to the Regional Administrator, who shall make the final agency decision whether to qualify the applicant.

(H) *Status of vessels pending appeal.* The Regional Administrator may authorize a vessel to fish with traps in Area 2 during an appeal. The Regional Administrator may do so by issuing a letter authorizing the appellant to fish up to 800 traps in Area 2 during the pendency of the appeal. The Regional Administrator's letter must be present onboard the vessel while it is engaged in such fishing in order for the vessel to be authorized. If the appeal is ultimately denied, the Regional Administrator's letter authorizing fishing during the appeal will become invalid 5 days after receipt of the notice of appellate denial or 15 days after the date on the notice of appellate denial, whichever occurs first.

* * * * *

■ 3. In § 697.7, add paragraph (c)(1)(xxx) to read as follows:

§ 697.7 Prohibitions.

* * * * *

(c) * * *

(1) * * *

(xxx) *Outer Cape Area seasonal closure.* The Federal waters of the Outer Cape Area shall be closed to lobster fishing with traps by Federal lobster permit holders from January 15 through March 15.

(A) Lobster fishing with traps is prohibited in the Outer Cape Area during this seasonal closure. Federal trap fishers are prohibited from possessing or landing lobster taken from the Outer Cape Area during the seasonal closure.

(B) All lobster traps must be removed from Outer Cape Area waters before the start of the seasonal closure and may not be re-deployed into Outer Cape Area waters until after the seasonal closure ends. Federal trap fishers are prohibited from setting, hauling, storing, abandoning or in any way leaving their traps in Outer Cape Area waters during this seasonal closure. Federal lobster permit holders are prohibited from possessing or carrying lobster traps aboard a vessel in Outer Cape Area waters during this seasonal closure unless the vessel is transiting through the Outer Cape Area pursuant to paragraph (c)(1)(xxx)(D) of this section.

(C) The Outer Cape Area seasonal closure relates only to the Outer Cape Area. The restrictive provisions of §§ 697.3 and 697.4(a)(7)(v) do not apply to this closure. Federal lobster permit holders with an Outer Cape Area designation and another Lobster Management Area designation on their Federal lobster permit would not have to similarly remove their lobster gear from the other designated management areas.

(D) *Transiting Outer Cape Area.* Federal lobster permit holders may possess lobster traps on their vessel in the Outer Cape Area during the seasonal closure only if:

(*1*) The trap gear is stowed; and

(*2*) The vessel is transiting the Outer Cape Area. For the purposes of this section, transiting shall mean passing through the Outer Cape Area without stopping to reach a destination outside the Outer Cape Area.

(E) The Regional Administrator may authorize a permit holder or vessel owner to haul ashore lobster traps from the Outer Cape Area during the seasonal closure without having to engage in the exempted fishing process in § 697.22, if the permit holder or vessel owner can establish the following:

(*1*) That the lobster traps were not able to be hauled ashore before the seasonal closure due to incapacity, vessel/mechanical inoperability, and/or poor weather; and

(*2*) That all lobsters caught in the subject traps will be immediately returned to the sea.

(F) The Regional Administrator may condition the authorization described in paragraph (c)(1)(xxx)(E) as appropriate in order to maintain the overall integrity of the closure.

* * * * *

■ 4. Revise § 697.19 to read as follows:

§ 697.19 Trap limits and trap tag requirements for vessels fishing with lobster traps.

(a) *Area 1 trap limits.* The Area 1 trap limit is 800 traps. Federally permitted lobster fishing vessels shall not fish with, deploy in, possess in, or haul back more than 800 lobster traps in Area 1.

(b) *Area 2 trap limits.* The Area 2 trap limit is 800 traps. Federally permitted lobster fishing vessels may only fish with traps that have been previously qualified and allocated into Area 2 by the Regional Administrator. This allocation may be modified by trap cuts and/or trap transfers, but in no case shall the allocation exceed the trap limit.

(c) *Area 3 trap limits.* The Area 3 trap limit is 1,945 traps. Federally permitted lobster fishing vessels may only fish with traps that have been previously qualified and allocated into Area 3 by the Regional Administrator. This allocation may be modified by trap cuts and/or trap transfers, but in no case shall the allocation exceed the trap limit.

(d) *Area 4 trap limits.* The Area 4 trap limit is 1,440 traps. Federally permitted lobster fishing vessels may only fish with traps that have been previously qualified and allocated into Area 4 by the Regional Administrator. This allocation may be modified by trap cuts and/or trap transfers, but in no case shall the allocation exceed the trap limit.

(e) *Area 5 trap limits.* The Area 5 trap limit is 1,440 traps, unless the vessel is operating under an Area 5 Trap Waiver permit issued under § 697.26. Federally permitted lobster fishing vessels may only fish with traps that have been previously qualified and allocated into Area 5 by the Regional Administrator. This allocation may be modified by trap cuts and/or trap transfers, but in no case shall the allocation exceed the trap limit.

(f) *Outer Cape Area.* The Outer Cape Area trap limit is 800 traps. Federally permitted lobster fishing vessels may only fish with traps that have been previously qualified and allocated into the Outer Cape Area by the Regional Administrator. This allocation may be modified by trap cuts and/or trap transfers, but in no case shall the allocation exceed the trap limit.

(g) *Lobster trap limits for vessels fishing or authorized to fish in more than one EEZ management area.* A vessel owner who elects to fish in more than one EEZ Management Area is restricted to the lowest trap limit of those areas and may not fish with, deploy in, possess in, or haul back from any of those elected management areas more lobster traps than the lowest number of lobster traps allocated to that vessel for any of the elected management areas.

(h) *Conservation equivalent trap limits in New Hampshire state waters.* Notwithstanding any other provision, any vessel with a Federal lobster permit

and a New Hampshire Full Commercial Lobster license may fish up to a maximum of 1,200 lobster traps in New Hampshire state waters, to the extent authorized by New Hampshire lobster fishery regulations. However, such vessel may not fish, possess, deploy, or haul back more than 800 lobster traps in the Federal waters of EEZ Nearshore Management Area 1, and may not fish more than a combined total of 1,200 lobster traps in the Federal and New Hampshire state waters portions of EEZ Nearshore Management Area 1.

(i) *Trap tag requirements for vessels fishing with lobster traps.* Any lobster trap fished in Federal waters must have a valid Federal lobster trap tag permanently attached to the trap bridge or central cross-member. Any vessel with a Federal lobster permit may not possess, deploy, or haul back lobster traps in any portion of any management area that do not have a valid, federally recognized lobster trap tag permanently attached to the trap bridge or central cross-member.

(j) *Maximum lobster trap tags authorized for direct purchase.* In any fishing year, the maximum number of tags authorized for direct purchase by each permit holder is the applicable trap limit specified in paragraphs (a) through (f) of this section plus an additional 10 percent to cover trap loss.

(k) *EEZ Management Area 5 trap waiver exemption.* Any vessel issued an Area 5 Trap Waiver permit under § 697.4(p) is exempt from the provisions of this section.

■ 5. Add § 697.27 to read as follows:

§ 697.27 Trap transferability.

(a) Federal lobster permit holders may elect to participate in a program that allows them to transfer trap allocation to other participating Federal lobster permit holders, subject to the following conditions:

(1) *Participation requirements.* To be eligible to participate in the Federal Trap Transfer Program:

(i) An individual must possess a valid Federal lobster permit; and

(ii) If the individual is dually permitted with both Federal and state lobster licenses, the individual must agree to synchronize his or her state and Federal allocations in each area for which there is an allocation. This synchronization shall be set at the lower of the state or Federal allocation in each area. This provision does not apply to Areas 1 and 6 as neither area have a Federal trap allocation.

(iii) Individuals participating in the Lobster Management Area 1 trap fishery may participate in the Trap Transfer Program, but doing so may result in forfeiture of future participation in the Area 1 trap fishery as follows:

(A) Area 1 fishers may accept, receive, or purchase trap allocations up to their Area 1 trap limit identified in § 697.19 and fish with that allocation both in Area 1 and the other area or areas subject to the restrictive provisions of § 697.3 and § 697.4(a)(7)(v).

(B) Area 1 fishers with trap allocations in Areas 2, 3, and/or the Outer Cape Area may transfer away or sell any portion of that allocation, but, in so doing, the Area 1 fisher shall forfeit any right to fish in Area 1 with traps in the future.

(2) *Trap allocation transfers.* Trap allocation transfers will be allowed subject to the following conditions:

(i) *State/Federal alignment.* Participants with dual state and Federal permits may participate in the Trap Transfer Program each year, but their state and Federal trap allocations must be aligned as required in paragraph (a)(1)(ii) of this section at the start and close of each trap transfer period.

(ii) *Eligible traps.* Buyers and sellers may only transfer trap allocations from Lobster Management Areas 2, 3, and the Outer Cape Area.

(iii) *Debiting remaining allocation.* The permit holder transferring trap allocations shall have his or her remaining Federal trap allocation in all Lobster Conservation Management Areas debited by the total amount of allocation transferred. This provision does not apply to Areas 1 and 6, as neither area have a Federal trap allocation. A seller may not transfer a trap allocation if, after the transfer is debited, the allocation in any remaining Lobster Conservation Management Area would be below zero.

(iv) *Crediting allocations for partial trap transfers.* In a partial trap transfer, where the transfer is occurring independent of a Federal lobster permit transfer, the permit holder receiving the transferred allocation shall have his or her allocation credited as follows:

(A) *Trap retirement.* All permit holders receiving trap allocation transfers shall retire 10 percent of that transferred allocation from the fishery for conservation. This provision does not pertain to full business transfers where the transfer includes the transfer of a Federal lobster permit and all traps associated with that permit.

(B) *Multi-area trap allocation history.* To the extent that transferred trap allocations have been granted access into multiple management areas, the recipient may elect any and all management areas for which the traps have demonstrated history.

(C) All trap allocation transfers are subject to whatever trap allocation cap exists in the involved lobster management area. No participant may receive a transfer that, when combined with existing allocation, would put that permit holder's trap allocation above the involved trap caps in § 697.19.

(v) In all allocation transfers, the buyer's and seller's initial allocations shall be calculated as being the allocation that the buyer and seller would otherwise have on the last day of the fishing year.

(vi) Trap allocations may only be transferred in 10-trap increments.

(vii) Trap allocation transfers must be approved by the Regional Administrator before becoming effective. The Regional Administrator shall approve a transfer upon a showing by the involved permit holders of the following:

(A) The proposed transfer is documented in a legible written agreement signed and dated by the involved permit holders. The agreement must identify the amount of allocation being transferred as well as the Federal lobster permit number from which the allocation is being taken and the Federal lobster permit number that is receiving the allocation. If the transfer involves parties who also possess a state lobster license, the parties must identify the state lobster license number and state of issuance.

(B) That the transferring permit holder has sufficient allocation to transfer and that the permit holder's post-transfer allocation is clear and agreed to. In determining whether seller has sufficient allocation to transfer, the Regional Administrator will calculate the seller's pre-transfer and post-transfer allocations. The pre-transfer allocation shall be the amount of the seller's allocation as it would exist on the last day of the fishing year. The post-transfer allocation shall be the pre-transfer allocation minus the total amount of traps being transferred prior to application of the 10-percent trap retirement set forth in paragraph (a)(2)(iv)(A) of this section.

(C) That the permit holder receiving the transfer has sufficient room under any applicable trap cap identified in § 697.19 to receive the transferred allocation and that the recipient's post-transfer allocation is clear and agreed to. In determining whether the buyer has sufficient room to receive allocation, the Regional Administrator will calculate the buyer's pre-transfer and post-transfer allocations. The pre-transfer allocation shall be the amount of the buyer's allocation as it would exist on the last day of the fishing year. The post-transfer allocation shall be the pre-

transfer allocation plus the total amount of traps being transferred minus 10 percent of the transferred allocation that shall be retired pursuant to the provisions of (a)(2)(iv)(A) of this section.

(3) *Trap transfer period.* The timing of the Trap Transfer Program is as follows:

(i) Federal lobster permit holders must declare their election into the program in writing to the NMFS Permit Office. Electing into the Trap Transfer Program is a one-time declaration, and the permit holder may participate in the program in later years without needing to re-elect into the program year after year. Federal permit holders may elect into the program at any time in any year, but their ability to actively transfer traps will be limited by the timing restrictions identified in paragraphs (a)(3)(ii) and (iii) of this section.

(ii) All trap transfer requests must be made in writing before September 30 each year, and if approved, will become effective at the start of the next fishing year. The Regional Administrator shall attempt to review, reconcile and notify the transferring parties of the disposition of the requested transfer before December 31 each year. Transfers are not valid until approved by the Regional Administrator.

(iii) *Year 1.* Notwithstanding paragraph (a)(3)(ii) of this section, the timing of the first year of the Trap Transfer Program is linked to the completion of the Commission's Trap Tag Database. NMFS will analyze the Trap Tag Database and when NMFS finds that the database is capable of tracking transfers for multiple jurisdictions, then NMFS will file a notice alerting the public of the date of when the Trap Transfer Program will begin.

(b) [Reserved]

[FR Doc. 2014–07734 Filed 4–4–14; 8:45 am]

BILLING CODE 3510–22–P

Proposed Rules

Federal Register
Vol. 79, No. 66
Monday, April 7, 2014

This section of the FEDERAL REGISTER contains notices to the public of the proposed issuance of rules and regulations. The purpose of these notices is to give interested persons an opportunity to participate in the rule making prior to the adoption of the final rules.

DEPARTMENT OF AGRICULTURE

Agricultural Marketing Service

7 CFR Part 987

[Docket No. AMS–FV–13–0090; FV14–987–2 PR]

Domestic Dates Produced or Packed in Riverside County, California; Revision of Assessment Requirements

AGENCY: Agricultural Marketing Service, USDA.

ACTION: Proposed rule.

SUMMARY: This proposed rule invites comments on proposed rules and regulations necessary for the California Date Administrative Committee (committee) to exercise its authority to impose interest and late payment charges on overdue handler assessments. The California date marketing order (order) regulates the handling of dates produced or packed in Riverside County, California, and is administered locally by the committee. Assessments upon date handlers are used to fund the reasonable and necessary expenses of the committee. These changes are expected to assist in the financial administration of the order by encouraging handlers to pay their assessments in a timely manner.

DATES: Comments must be received by June 6, 2014.

ADDRESSES: Interested persons are invited to submit written comments concerning this proposal. Comments must be sent to the Docket Clerk, Marketing Order and Agreement Division, Fruit and Vegetable Program, AMS, USDA, 1400 Independence Avenue SW., STOP 0237, Washington, DC 20250–0237; Fax: (202) 720–8938; or Internet: *http://www.regulations.gov.* All comments should reference the docket number, and the date and page number of this issue of the **Federal Register**, and will be available for public inspection in the Office of the Docket Clerk during regular business hours, or can be viewed at: *http://www.regulations.gov.* All comments submitted in response to this proposal will be included in the record and will be made available to the public. Please be advised that the identity of the individuals or entities submitting comments will be made public on the internet at the address provided above.

FOR FURTHER INFORMATION CONTACT: Terry Vawter, Senior Marketing Specialist, or Martin Engeler, Regional Director, California Marketing Field Office, Marketing Order and Agreement Division, Fruit and Vegetable Program, AMS, USDA; Telephone: (559) 487–5901, Fax: (559) 487–5906, or Email: *Terry.Vawter@ams.usda.gov* or *Martin.Engeler@ams.usda.gov.*

Small businesses may request information on complying with this regulation by contacting Jeffrey Smutny, Marketing Order and Agreement Division, Fruit and Vegetable Program, AMS, USDA, 1400 Independence Avenue SW., STOP 0237, Washington, DC 20250–0237; Telephone: (202) 720–2491, Fax: (202) 720–8938, or Email: *Jeffrey.Smutny@ams.usda.gov.*

SUPPLEMENTARY INFORMATION: This proposal is issued under Marketing Agreement and Order No. 987, as amended (7 CFR Part 987), regulating the handling of dates produced or packed in Riverside County, California, hereinafter referred to as the ''order.'' The order is effective under the Agricultural Marketing Agreement Act of 1937, as amended (7 U.S.C. 601–674), hereinafter referred to as the ''Act.''

The Department of Agriculture (USDA) is issuing this proposed rule in conformance with Executive Orders 12866, 13563, and 13175.

This proposal has been reviewed under Executive Order 12988, Civil Justice Reform. This proposed rule is not intended to have retroactive effect.

The Act provides that administrative proceedings must be exhausted before parties may file suit in court. Under section 608c(15)(A) of the Act, any handler subject to an order may file with USDA a petition stating that the order, any provision of the order, or any obligation imposed in connection with the order is not in accordance with law and request a modification of the order or to be exempted therefrom. Such handler is afforded the opportunity for a hearing on the petition. After the hearing, USDA would rule on the petition. The Act provides that the district court of the United States in any district in which the handler is an inhabitant, or has his or her principal place of business, has jurisdiction to review USDA's ruling on the petition, provided an action is filed not later than 20 days after the date of the entry of the ruling.

This proposed rule invites comments on proposed rules and regulations necessary for the committee to exercise its authority to impose interest and late payment charges on overdue handler assessments. Interest and late payment charges would encourage California date handlers to pay their assessments promptly when billed by the committee.

The order was amended on June 25, 2012, [77 FR 37762], to provide authority for the committee to recommend these proposed actions, thereby permitting these changes through informal rulemaking, with the approval of the Secretary.

Section 987.72 of the order establishes the authority for the committee to collect assessments from handlers. Paragraph (b) of that section specifically authorizes the committee to establish rules and regulations regarding delinquent assessment payments, including subjecting overdue assessments to an interest or late payment charge, or both; and authorizes the committee to recommend to USDA the period of time at which assessments become late, the rate of interest, and the late payment charge to be imposed on such delinquent assessments.

The California date industry is a small industry with 70 producers and 11 handlers. If a handler withholds an assessment payment, it has an impact on the committee's ability to administer the order. The committee believes that adding the authority to charge interest and late payment fees would provide greater incentive for handlers to make assessment payments on time. This, in turn, would help ensure that the committee is able to meet its financial obligations, and continue to fund its programs on a continuing basis.

Charging interest and late payment fees on unpaid financial obligations is commonplace in the business world, and implementation of such charges would bring the committee's financial operations in line with standard business practices. Such charges would remove any financial advantage for those who do not pay on time while

they benefit from committee programs, thus, creating a more level playing field for the industry.

For those reasons, the committee unanimously recommended an interest rate of 1.5 percent per month, a late payment charge of 10 percent on the unpaid balance, and specified that assessment payments become overdue at 60 days after the date on the assessment invoice. This recommendation was made at a committee meeting on October 31, 2013. Based upon the above considerations, this action proposes interest and late payment charges for delinquent payment of assessments.

Initial Regulatory Flexibility Analysis

Pursuant to requirements set forth in the Regulatory Flexibility Act (RFA) (5 U.S.C. 601–612), the Agricultural Marketing Service (AMS) has considered the economic impact of this rule on small entities. Accordingly, AMS has prepared this initial regulatory flexibility analysis.

The purpose of the RFA is to fit regulatory actions to the scale of businesses subject to such actions in order that small businesses will not be unduly or disproportionately burdened. Marketing orders issued pursuant to the Act, and the rules issued thereunder, are unique in that they are brought about through group action of essentially small entities acting on their own behalf.

There are approximately 70 producers of dates in the production area and 11 handlers subject to regulation under the marketing order. The Small Business Administration defines small agricultural producers as those having annual receipts less than $750,000, and small agricultural service firms as those whose annual receipts are less than $7,000,000. (13 CFR 121.201)

According to the National Agricultural Statistics Service (NASS), data for the most recently completed crop year (2012) shows that about 3.70 tons, or 7,400 pounds, of dates were produced per acre. The 2012 grower price published by NASS was $1,340 per ton, or $0.67 per pound. Thus, the value of date production per acre in the 2012–13 crop year averaged about $4,958 (7,400 pounds times $0.67 per pound). At that average price, a producer would have to farm over 151 acres to receive an annual income from dates of $750,000 ($750,000 divided by $4,958 per acre equals 151.2 acres). According to committee staff, the majority of California date producers farm less than 151 acres. Thus, it can be concluded that the majority of date producers could be considered small entities.

In addition, according to data from the committee staff, the majority of California dates handlers have receipts of less than $7,000,000, and may also be considered small entities.

This proposal would implement an interest charge of 1.5 percent monthly, and a late payment charge of 10 percent on the unpaid balance on handler assessments owed to the committee 60 days after the date on the assessment invoice.

At the meeting, the committee discussed the impact of these changes on handlers. They noted that the greatest impact would only be on handlers who may not pay their assessments on time. Such charges would provide an incentive for all handlers to pay their assessments in a timely manner.

The committee also discussed alternatives to these changes, including not implementing them at all. It was determined that not implementing interest and late payment charges would allow the current problem to continue. Late or delinquent assessment payments negatively impact the committee's ability to efficiently manage the program's resources and meet budget obligations. The committee concluded that encouraging timely assessment payment through the imposition of interest and late payment charges would benefit the administration of the order. Thus, the committee unanimously recommended these changes.

In accordance with the Paperwork Reduction Act of 1995 (44 U.S.C. Chapter 35), the order's information collection requirements have been previously approved by the Office of Management and Budget (OMB) and assigned OMB No. 0581–0178, ''Vegetable and Specialty Crop Marketing Orders.'' No changes in those requirements as a result of this action are necessary. Should any changes become necessary, they would be submitted to OMB for approval.

This action imposes no additional reporting or recordkeeping requirements on either small or large Riverside County, California, date handlers. As with all Federal marketing order programs, reports and forms are periodically reviewed to reduce information requirements and duplication by industry and public sector agencies.

AMS is committed to complying with the E-Government Act, to promote the use of the internet and other information technologies to provide increased opportunities for citizen access to Government information and services, and for other purposes.

USDA has not identified any relevant Federal rules that duplicate, overlap, or conflict with this rule.

In addition, the committee's meeting was widely publicized throughout the California date industry, and all interested persons were invited to attend the meeting and encouraged to participate in committee deliberations on all issues. Like all committee meetings, the October 31, 2013, meeting was a public meeting and all entities, both large and small, were able to express views on this issue. Finally, interested persons are invited to submit comments on this proposed rule, including the regulatory and informational impacts of this action on small businesses.

A small business guide on complying with fruit, vegetable, and specialty crop marketing agreements and orders may be viewed at: *http://www.ams.usda.gov/MarketingOrdersSmallBusinessGuide.* Any questions about the compliance guide should be sent to Jeffrey Smutny at the previously mentioned address in the **FOR FURTHER INFORMATION CONTACT** section.

A 60-day comment period is provided to allow interested persons to respond to this proposal. All written comments timely received will be considered before a final determination is made on this matter.

List of Subjects in 7 CFR Part 987

Dates, Marketing agreements, Reporting and recordkeeping requirements.

For the reasons set forth in the preamble, 7 CFR part 987 is proposed to be amended as follows:

PART 987—DOMESTIC DATES PRODUCED OR PACKED IN RIVERSIDE COUNTY, CALIFORNIA

■ 1. The authority citation for 7 CFR part 987 continues to read as follows:

Authority: 7 U.S.C. 601–674.

■ 2. Section 987.172 is amended by revising the section heading, designating the existing paragraph as paragraph (a), and adding new paragraphs (b) and (c) to read as follows:

§ 987.172 Adjustment of assessment obligation, and late payment and interest charges.

* * * * *

(b) Pursuant to § 987.72, the committee shall impose an interest charge on any handler whose assessment payment has not been received in the committee's office, or the envelope containing the payment

legibly postmarked by the U.S. Postal Service, within 60 days of the invoice date shown on the handler's statement. The interest charge shall be a rate of one and one half percent per month, and shall be applied to the unpaid assessment balance for the number of days all or any part of the unpaid balance is delinquent beyond the 60-day payment period.

(c) In addition to the interest charge specified in paragraph (b) of this section, the committee shall impose a late payment charge on any handler whose payment has not been received in the committee's office, or the envelope containing the payment legibly postmarked by the U.S. Postal Service, within 60 days of the invoice date. The late payment charge shall be 10 percent of the unpaid balance.

Dated: April 2, 2014.

Rex A. Barnes,

Associate Administrator, Agricultural Marketing Service.

[FR Doc. 2014–07701 Filed 4–4–14; 8:45 am]

BILLING CODE P

DEPARTMENT OF TRANSPORTATION

Federal Aviation Administration

14 CFR Part 71

[Docket No. FAA–2014–0013; Airspace Docket No. 13–ASW–33]

Proposed Amendment of Class E Airspace; Taylor, TX

AGENCY: Federal Aviation Administration (FAA), DOT.

ACTION: Notice of proposed rulemaking (NPRM).

SUMMARY: This action proposes to amend Class E airspace at Taylor, TX. Additional controlled airspace is necessary to accommodate new Standard Instrument Approach Procedures (SIAPs) at Taylor Municipal Airport. The FAA is taking this action to enhance the safety and management of Instrument Flight Rules (IFR) operations for SIAPs at the airport. Airport coordinates would also be adjusted.

DATES: Comments must be received on or before May 22, 2014.

ADDRESSES: Send comments on this proposal to the U.S. Department of Transportation, Docket Operations, 1200 New Jersey Avenue SE., West Building Ground Floor, Room W12–140, Washington, DC 20590–0001. You must identify the docket number FAA–2014–0013/Airspace Docket No. 13–ASW–33, at the beginning of your comments. You may also submit comments through the Internet at *http://www.regulations.gov.* You may review the public docket containing the proposal, any comments received, and any final disposition in person in the Dockets Office between 9:00 a.m. and 5:00 p.m., Monday through Friday, except Federal holidays. The Docket Office telephone 1–800–647–5527, is on the ground floor of the building at the above address.

FOR FURTHER INFORMATION CONTACT: Raul Garza, Jr., Central Service Center, Operations Support Group, Federal Aviation Administration, Southwest Region, 2601 Meacham Blvd., Fort Worth, TX 76137; telephone: 817–321–7654.

SUPPLEMENTARY INFORMATION:

Comments Invited

Interested parties are invited to participate in this proposed rulemaking by submitting such written data, views, or arguments, as they may desire. Comments that provide the factual basis supporting the views and suggestions presented are particularly helpful in developing reasoned regulatory decisions on the proposal. Comments are specifically invited on the overall regulatory, aeronautical, economic, environmental, and energy-related aspects of the proposal. Communications should identify both docket numbers and be submitted in triplicate to the address listed above. Commenters wishing the FAA to acknowledge receipt of their comments on this notice must submit with those comments a self-addressed, stamped postcard on which the following statement is made: ''Comments to Docket No. FAA–2014–0013/Airspace Docket No. 13–ASW–33.'' The postcard will be date/time stamped and returned to the commenter.

Availability of NPRMs

An electronic copy of this document may be downloaded through the Internet at *http://www.regulations.gov.* Recently published rulemaking documents can also be accessed through the FAA's Web page at *http://www.faa.gov/airports_airtraffic/air_traffic/publications/airspace_amendments/.*

You may review the public docket containing the proposal, any comments received and any final disposition in person in the Dockets Office (see **ADDRESSES** section for address and phone number) between 9:00 a.m. and 5:00 p.m., Monday through Friday, except Federal holidays. An informal docket may also be examined during normal business hours at the office of the Central Service Center, 2601 Meacham Blvd., Fort Worth, TX 76137.

Persons interested in being placed on a mailing list for future NPRMs should contact the FAA's Office of Rulemaking (202) 267–9677, to request a copy of Advisory Circular No. 11–2A, Notice of Proposed Rulemaking Distribution System, which describes the application procedure.

The Proposal

This action proposes to amend Title 14, Code of Federal Regulations (14 CFR), Part 71 by amending Class E airspace to accommodate new standard instrument approach procedures at Taylor Municipal Airport, Taylor, TX. Accordingly, an additional segment would extend from the 6.4-mile radius of the airport to 10.7 miles north of the airport, to retain the safety and management of IFR aircraft in Class E airspace to/from the en route environment. Airport coordinates would also be adjusted.

Class E airspace areas are published in Paragraph 6005 of FAA Order 7400.9X, dated August 7, 2013 and effective September 15, 2013, which is incorporated by reference in 14 CFR 71.1. The Class E airspace designation listed in this document would be published subsequently in the Order.

The FAA has determined that this proposed regulation only involves an established body of technical regulations for which frequent and routine amendments are necessary to keep them operationally current. It, therefore, (1) is not a ''significant regulatory action'' under Executive Order 12866; (2) is not a ''significant rule'' under DOT Regulatory Policies and Procedures (44 FR 11034; February 26, 1979); and (3) does not warrant preparation of a Regulatory Evaluation as the anticipated impact is so minimal. Since this is a routine matter that will only affect air traffic procedures and air navigation, it is certified that this rule, when promulgated, will not have a significant economic impact on a substantial number of small entities under the criteria of the Regulatory Flexibility Act.

The FAA's authority to issue rules regarding aviation safety is found in Title 49 of the U.S. Code. Subtitle 1, Section 106 describes the authority of the FAA Administrator. Subtitle VII, Aviation Programs, describes in more detail the scope of the agency's authority. This rulemaking is promulgated under the authority described in Subtitle VII, Part A, Subpart I, Section 40103. Under that section, the FAA is charged with prescribing regulations to assign the use

of airspace necessary to ensure the safety of aircraft and the efficient use of airspace. This proposed regulation is within the scope of that authority as it would amend controlled airspace at Taylor Municipal Airport, Taylor, TX.

Environmental Review

This proposal will be subject to an environmental analysis in accordance with FAA Order 1050.1E, ''Environmental Impacts: Policies and Procedures'' prior to any FAA final regulatory action.

List of Subjects in 14 CFR Part 71

Airspace, Incorporation by reference, Navigation (air).

The Proposed Amendment

In consideration of the foregoing, the Federal Aviation Administration proposes to amend 14 CFR part 71 as follows:

PART 71—DESIGNATION OF CLASS A, B, C, D, AND E AIRSPACE AREAS; AIR TRAFFIC SERVICE ROUTES; AND REPORTING POINTS

■ 1. The authority citation for part 71 continues to read as follows:

Authority: 49 U.S.C. 106(g); 40103, 40113, 40120; E.O. 10854, 24 FR 9565, 3 CFR, 1959–1963 Comp., p. 389.

§ 71.1 [Amended]

■ 2. The incorporation by reference in 14 CFR 71.1 of FAA Order 7400.9X, Airspace Designations and Reporting Points, dated August 7, 2013, and effective September 15, 2013, is amended as follows:

Paragraph 6005 Class E5 Airspace areas extending upward from 700 feet or more above the surface of the earth.

* * * * *

ASW TX E5 Taylor, TX [Amended]

Taylor Municipal Airport, TX
(Lat. 30°34′22″ N., long. 97°26′36″ W.)

That airspace extending upward from 700 feet above the surface within a 6.4-mile radius of Taylor Municipal Airport, and within 1.6 miles each side of the 039° bearing from the airport extending from the 6.4-mile radius to 11.2 miles northeast of the airport, and within 3.9 miles each side of 021° bearing from the airport extending from the 6.4-mile radius to 7.3 miles northeast of the airport, and within 2 miles each side of the 359° bearing from the airport extending from the 6.4-mile radius to 10.7 miles north of the airport.

Issued in Fort Worth, TX, on March 10, 2014.

Kent M. Wheeler,

Acting Manager, Operations Support Group, ATO Central Service Center.

[FR Doc. 2014–07461 Filed 4–4–14; 8:45 am]

BILLING CODE 4910–13–P

DEPARTMENT OF HOMELAND SECURITY

Coast Guard

33 CFR Part 165

[Docket Number USCG–2014–0111]

RIN 1625–AA00

Safety Zone, Atlantic Ocean; Virginia Beach, VA

AGENCY: Coast Guard, DHS.

ACTION: Notice of Proposed Rulemaking.

SUMMARY: The Coast Guard proposes to establish a temporary safety zone on the navigable waters of the Atlantic Ocean in Virginia Beach, VA on September 11, 2014. This safety zone will restrict vessel movement in the specified area during the Virginia Symphony Orchestra Fireworks. This action is necessary to provide for the safety of life and property on the surrounding navigable waters during the fireworks display.

DATES: Comments and related material must be received by the Coast Guard on or before May 7, 2014.

ADDRESSES: You may submit comments identified by docket number (USCG–2014–0111) using any one of the following methods:

(1) Federal eRulemaking Portal: *http://www.regulations.gov.*

(2) Fax: 202–493–2251.

(3) Mail or Delivery: Docket Management Facility (M–30), U.S. Department of Transportation, West Building Ground Floor, Room W12–140, 1200 New Jersey Avenue SE., Washington, DC 20590–0001. Deliveries accepted between 9 a.m. and 5 p.m., Monday through Friday, except federal holidays. The telephone number is 202–366–9329.

See the ''Public Participation and Request for Comments'' portion of the **SUPPLEMENTARY INFORMATION** section below for further instructions on submitting comments. To avoid duplication, please use only one of these three methods.

FOR FURTHER INFORMATION CONTACT: If you have questions on this rule, call or email LCDR Hector Cintron, Waterways Management Division Chief, Sector Hampton Roads, Coast Guard; telephone (757) 668–5581, email *Hector.L.Cintron@uscg.mil.* If you have questions on viewing or submitting material to the docket, call Cheryl Collins, Program Manager, Docket Operations, telephone (202) 366–9826.

SUPPLEMENTARY INFORMATION:

Table of Acronyms

DHS Department of Homeland Security
FR Federal Register
NPRM Notice of Proposed Rulemaking

A. Public Participation and Request for Comments

We encourage you to participate in this rulemaking by submitting comments and related materials. All comments received will be posted without change to *http://www.regulations.gov* and will include any personal information you have provided.

1. Submitting Comments

If you submit a comment, please include the docket number for this rulemaking, indicate the specific section of this document to which each comment applies, and provide a reason for each suggestion or recommendation. You may submit your comments and material online at *http://www.regulations.gov,* or by fax, mail, or hand delivery, but please use only one of these means. If you submit a comment online, it will be considered received by the Coast Guard when you successfully transmit the comment. If you fax, hand deliver, or mail your comment, it will be considered as having been received by the Coast Guard when it is received at the Docket Management Facility. We recommend that you include your name and a mailing address, an email address, or a telephone number in the body of your document so that we can contact you if we have questions regarding your submission.

To submit your comment online, go to *http://www.regulations.gov,* type the docket number [USCG–2014–0111] in the ''SEARCH'' box and click ''SEARCH.'' Click on ''Submit a Comment'' on the line associated with this rulemaking.

If you submit your comments by mail or hand delivery, submit them in an unbound format, no larger than 8½ by 11 inches, suitable for copying and electronic filing. If you submit comments by mail and would like to know that they reached the Facility, please enclose a stamped, self-addressed postcard or envelope. We will consider all comments and material received during the comment period and may

change the rule based on your comments.

2. Viewing Comments and Documents

To view comments, as well as documents mentioned in this preamble as being available in the docket, go to *http://www.regulations.gov,* type the docket number [USCG–2014–0111] in the ''SEARCH'' box and click ''SEARCH.'' Click on Open Docket Folder on the line associated with this rulemaking. You may also visit the Docket Management Facility in Room W12–140 on the ground floor of the Department of Transportation West Building, 1200 New Jersey Avenue SE., Washington, DC 20590, between 9 a.m. and 5 p.m., Monday through Friday, except Federal holidays.

3. Privacy Act

Anyone can search the electronic form of comments received into any of our dockets by the name of the individual submitting the comment (or signing the comment, if submitted on behalf of an association, business, labor union, etc.). You may review a Privacy Act notice regarding our public dockets in the January 17, 2008, issue of the **Federal Register** (73 FR 3316).

4. Public Meeting

We do not now plan to hold a public meeting. But you may submit a request for one, using one of the methods specified under **ADDRESSES**. Please explain why you believe a public meeting would be beneficial. If we determine that one would aid this rulemaking, we will hold one at a time and place announced by a later notice in the **Federal Register**.

B. Regulatory History and Information

The Virginia Symphony Orchestra Firework Display over the Atlantic Ocean in Virginia Beach, Virginia, is an annual event that has previously been held on Wednesdays. It is typically included in the table to 33 CFR 165.506, at section (c) event number ''15,'' which provides a recurring safety zone for certain annual events falling on Wednesday, Friday, Saturday, Sunday. However, in 2014, the organizers plan to hold it on a Thursday. The perimeter of the safety zone and the enforcement times remain the same as that from the table, only the day of the week will change.

C. Basis and Purpose

The Virginia Symphony Orchestra will host a fireworks display over the Atlantic Ocean in Virginia Beach, VA. The fireworks debris fallout area will extend over the navigable waters of the Atlantic Ocean. A fleet of spectator vessels are anticipated to gather nearby to view the fireworks display. Due to the need to protect mariners and spectators from the hazards associated with the fireworks displays, such as the accidental discharge of fireworks, dangerous projectiles, and falling hot embers or other debris, vessel traffic will be temporarily restricted. Vessels may not enter the regulated area unless they receive permission from the Captain of the Port or his Representative.

D. Discussion of the Proposed Rule

There will be a temporary change to the Table in § 165.506(c), to add event number ''25.'' The Coast Guard will establish a safety zone on the waters of the Atlantic Ocean within a 1000 yard radius of the center located near the shoreline at position 36°-51′-12″ N / 075°-58′-06″ W (NAD 1983), in the vicinity of Virginia Beach, Virginia. This safety zone will be enforced on September 11, 2014 between the hours of 9:15 p.m. and 9:45 p.m. Access to the safety zone will be restricted during the specified dates and times.

Except for vessels authorized by the Captain of the Port or his Representative, no person or vessel may enter or remain in the safety zone during the time frame listed. The Captain of the Port will give notice of the enforcement of the safety zone by all appropriate means to provide the widest dissemination of notice among the affected segments of the public. This will include publication in the Local Notice to Mariners and Marine Information Broadcasts.

E. Regulatory Analyses

We developed this proposed rule after considering numerous statutes and executive orders related to rulemaking. Below we summarize our analyses based on these statutes and executive orders.

1. Regulatory Planning and Review

This proposed rule is not a significant regulatory action under section 3(f) of Executive Order 12866, Regulatory Planning and Review, as supplemented by Executive Order 13563, Improving Regulation and Regulatory Review, and does not require an assessment of potential costs and benefits under section 6(a)(3) of Executive Order 12866 or under section 1 of Executive Order 13563. The Office of Management and Budget has not reviewed it under those Orders. The primary impact of these regulations will be on vessels wishing to transit the affected waterways during the safety zone on the Atlantic Ocean in the vicinity of Virginia Beach, VA from 9:15 p.m. until 9:45 p.m. on September 11, 2014. Although these regulations prevent traffic from transiting a portion of the Atlantic Ocean during these events, that restriction is limited in duration, affects only a limited area, and will be well publicized to allow mariners to make alternative plans for transiting the affected area.

2. Impact on Small Entities

The Regulatory Flexibility Act of 1980 (RFA), 5 U.S.C. 601–612, as amended, requires federal agencies to consider the potential impact of regulations on small entities during rulemaking. The term ''small entities'' comprises small businesses, not-for-profit organizations that are independently owned and operated and are not dominant in their fields, and governmental jurisdictions with populations of less than 50,000. The Coast Guard certifies under 5 U.S.C. 605(b) that this proposed rule will not have a significant economic impact on a substantial number of small entities.

This proposed rule will affect the following entities, some of which might be small entities: the owners or operators of vessels intending to transit or anchor in waters of the Atlantic Ocean during the outlined timeframe.

This safety zone will not have a significant economic impact on a substantial number of small entities for the following reasons: (i) The safety zone will only be in place for a limited duration, and (ii) before the enforcement period, maritime advisories will be issued allowing mariners to adjust their plans accordingly.

3. Assistance for Small Entities

Under section 213(a) of the Small Business Regulatory Enforcement Fairness Act of 1996 (Pub. L. 104–121), we want to assist small entities in understanding this proposed rule. If the rule would affect your small business, organization, or governmental jurisdiction and you have questions concerning its provisions or options for compliance, please contact the person listed in the **FOR FURTHER INFORMATION CONTACT**, above.

Small businesses may send comments on the actions of Federal employees who enforce, or otherwise determine compliance with, Federal regulations to the Small Business and Agriculture Regulatory Enforcement Ombudsman and the Regional Small Business Regulatory Fairness Boards. The Ombudsman evaluates these actions annually and rates each agency's responsiveness to small business. If you wish to comment on actions by employees of the Coast Guard, call 1–

888–REG–FAIR (1–888–734–3247). The Coast Guard will not retaliate against small entities that question or complain about this rule or any policy or action of the Coast Guard.

4. Collection of Information

This proposed rule will not call for a new collection of information under the Paperwork Reduction Act of 1995 (44 U.S.C. 3501–3520).

5. Federalism

A rule has implications for federalism under Executive Order 13132, Federalism, if it has a substantial direct effect on the States, on the relationship between the national government and the States, or on the distribution of power and responsibilities among the various levels of government. We have analyzed this proposed rule under that Order and determined that this rule does not have implications for federalism.

6. Protest Activities

The Coast Guard respects the First Amendment rights of protesters. Protesters are asked to contact the person listed in the **FOR FURTHER INFORMATION CONTACT** section to coordinate protest activities so that your message can be received without jeopardizing the safety or security of people, places or vessels.

7. Unfunded Mandates Reform Act

The Unfunded Mandates Reform Act of 1995 (2 U.S.C. 1531–1538) requires Federal agencies to assess the effects of their discretionary regulatory actions. In particular, the Act addresses actions that may result in the expenditure by a State, local, or tribal government, in the aggregate, or by the private sector of $100,000,000 (adjusted for inflation) or more in any one year. Though this proposed rule will not result in such an expenditure, we do discuss the effects of this rule elsewhere in this preamble.

8. Taking of Private Property

This proposed rule will not cause a taking of private property or otherwise have taking implications under Executive Order 12630, Governmental Actions and Interference with Constitutionally Protected Property Rights.

9. Civil Justice Reform

This proposed rule meets applicable standards in sections 3(a) and 3(b)(2) of Executive Order 12988, Civil Justice Reform, to minimize litigation, eliminate ambiguity, and reduce burden.

10. Protection of Children

We have analyzed this proposed rule under Executive Order 13045, Protection of Children from Environmental Health Risks and Safety Risks. This rule is not an economically significant rule and does not create an environmental risk to health or risk to safety that may disproportionately affect children.

11. Indian Tribal Governments

This proposed rule does not have tribal implications under Executive Order 13175, Consultation and Coordination with Indian Tribal Governments, because it does not have a substantial direct effect on one or more Indian tribes, on the relationship between the Federal Government and Indian tribes, or on the distribution of power and responsibilities between the Federal Government and Indian tribes.

12. Energy Effects

This proposed rule is not a ''significant energy action'' under Executive Order 13211, Actions Concerning Regulations That Significantly Affect Energy Supply, Distribution, or Use.

13. Technical Standards

This proposed rule does not use technical standards. Therefore, we did not consider the use of voluntary consensus standards.

14. Environment

We have analyzed this proposed rule under Department of Homeland Security Management Directive 023–01 and Commandant Instruction M16475.lD, which guide the Coast Guard in complying with the National Environmental Policy Act of 1969 (NEPA) (42 U.S.C. 4321–4370f), and have determined that this action is one of a category of actions that do not individually or cumulatively have a significant effect on the human environment. This proposed rule involves the establishment of a safety zone. This proposed rule is categorically excluded from further review under paragraph 34-g of Figure 2–1 of the Commandant Instruction. An environmental analysis checklist supporting this determination and a Categorical Exclusion Determination are available in the docket where indicated under **ADDRESSES**. We seek any comments or information that may lead to the discovery of a significant environmental impact from this rule.

List of Subjects in 33 CFR Part 165

Harbors, Marine safety, Navigation (water), Reporting and recordkeeping requirements, Security measures, Waterways.

For the reasons discussed in the preamble, the Coast Guard proposes to amend 33 CFR part 165 as follows:

PART 165—REGULATED NAVIGATION AREAS AND LIMITED ACCESS AREAS

■ 1. The authority citation for part 165 continues to read as follows:

Authority: 33 U.S.C. 1231; 46 U.S.C. Chapter 701, 3306, 3703; 50 U.S.C. 191, 195; 33 CFR 1.05–1, 6.04–1, 6.04–6, 160.5; Pub. L. 107–295, 116 Stat. 2064; Department of Homeland Security Delegation No. 0170.1.

■ 2. Add § 165.T05–0111 to read as follows:

§ 165.T05–0111 Safety Zone, Atlantic Ocean; Virginia Beach, VA.

(a) Definitions. For the purposes of this section, *Captain of the Port* means the Commander, Sector Hampton Roads. *Representative* means any Coast Guard commissioned, warrant or petty officer who has been authorized to act on the behalf of the Captain of the Port.

(b) Location. The following area is a safety zone: Specified waters of the Captain of the Port Sector Hampton Roads zone, as defined in 33 CFR 3.25–10, all waters of the Atlantic Ocean within 1000 yards of 36°-51′-12″ N / 075°-58′-06″ W (NAD 1983) in Virginia Beach, VA.

(c) Regulations. (1) In accordance with the general regulations in 165.23 of this part, entry into this zone is prohibited unless authorized by the Captain of the Port, Hampton Roads or his designated representatives.

(2) The operator of any vessel in the immediate vicinity of this safety zone shall:

(i) Contact on scene contracting vessels via VHF channel 13 and 16 for passage instructions.

(ii) If on scene proceed as directed by any commissioned, warrant or petty officer on shore or on board a vessel that is displaying a U.S. Coast Guard Ensign.

(3) The Captain of the Port, Hampton Roads can be reached through the Sector Duty Officer at Sector Hampton Roads in Portsmouth, Virginia at telephone number (757) 668–5555.

(4) The Coast Guard Representatives enforcing the safety zone can be contacted on VHF–FM marine band radio channel 13 (165.65 Mhz) and channel 16 (156.8 Mhz).

(d) Enforcement Period. This section will be enforced from 9:15 p.m. until 9:45 p.m. on September 11, 2014.

Dated: March 13, 2014.

John K. Little,

Captain, U.S. Coast Guard, Captain of the Port Hampton Roads.

[FR Doc. 2014–07609 Filed 4–4–14; 8:45 am]

BILLING CODE 9110–04–P

DEPARTMENT OF HOMELAND SECURITY

Coast Guard

33 CFR Part 165

[Docket Number USCG–2014–0007]

RIN 1625–AA00

Safety Zone, Atlantic Ocean; Virginia Beach, VA

AGENCY: Coast Guard, DHS.

ACTION: Notice of proposed rulemaking.

SUMMARY: The Coast Guard proposes to establish a temporary safety zone on the navigable waters of the Atlantic Ocean in Virginia Beach, VA. This safety zone is intended to restrict vessel movement in the specified area during the Patriotic Festival III. This action is necessary to provide for the safety of life and property on the surrounding navigable waters during the air show.

DATES: Comments and related material must be received by the Coast Guard on or before May 7, 2014.

ADDRESSES: Documents mentioned in this preamble are part of docket [USCG–2014–0007]. To view documents mentioned in this preamble as being available in the docket, go to *http://www.regulations.gov*, type the docket number in the ''SEARCH'' box and click ''SEARCH.'' Click on Open Docket Folder on the line associated with this rulemaking. You may also visit the Docket Management Facility in Room W12–140 on the ground floor of the Department of Transportation West Building, 1200 New Jersey Avenue SE., Washington, DC 20590, between 9 a.m. and 5 p.m., Monday through Friday, except Federal holidays.

FOR FURTHER INFORMATION CONTACT: If you have questions on this rule, call or email LCDR Hector Cintron, Waterways Management Division Chief, Sector Hampton Roads, Coast Guard; telephone (757) 668–5581, email *Hector.L.Cintron@uscg.mil*. If you have questions on viewing or submitting material to the docket, call Cheryl Collins, Program Manager, Docket Operations, telephone (202) 366–9826.

SUPPLEMENTARY INFORMATION:

Table of Acronyms

DHS Department of Homeland Security
FR Federal Register
NPRM Notice of Proposed Rulemaking

A. Public Participation and Request for Comments

We encourage you to participate in this rulemaking by submitting comments and related materials. All comments received will be posted without change to *http://www.regulations.gov* and will include any personal information you have provided.

1. Submitting Comments

If you submit a comment, please include the docket number for this rulemaking, indicate the specific section of this document to which each comment applies, and provide a reason for each suggestion or recommendation. You may submit your comments and material online at *http://www.regulations.gov*, or by fax, mail, or hand delivery, but please use only one of these means. If you submit a comment online, it will be considered received by the Coast Guard when you successfully transmit the comment. If you fax, hand deliver, or mail your comment, it will be considered as having been received by the Coast Guard when it is received at the Docket Management Facility. We recommend that you include your name and a mailing address, an email address, or a telephone number in the body of your document so that we can contact you if we have questions regarding your submission.

To submit your comment online, go to *www.regulations.gov*, type the docket number [USCG–2014–0007] in the ''SEARCH'' box and click ''SEARCH.'' Click on ''Submit a Comment'' on the line associated with this rulemaking.

If you submit your comments by mail or hand delivery, submit them in an unbound format, no larger than 8½ by 11 inches, suitable for copying and electronic filing. If you submit comments by mail and would like to know that they reached the Facility, please enclose a stamped, self-addressed postcard or envelope. We will consider all comments and material received during the comment period and may change the rule based on your comments.

2. Viewing Comments and Documents

To view comments, as well as documents mentioned in this preamble as being available in the docket, go to *http://www.regulations.gov*, type the docket number [USCG–2014–0007] in the ''SEARCH'' box and click ''SEARCH.'' Click on Open Docket Folder on the line associated with this rulemaking. You may also visit the Docket Management Facility in Room W12–140 on the ground floor of the Department of Transportation West Building, 1200 New Jersey Avenue SE., Washington, DC 20590, between 9 a.m. and 5 p.m., Monday through Friday, except Federal holidays.

3. Privacy Act

Anyone can search the electronic form of comments received into any of our dockets by the name of the individual submitting the comment (or signing the comment, if submitted on behalf of an association, business, labor union, etc.). You may review a Privacy Act notice regarding our public dockets in the January 17, 2008, issue of the **Federal Register** (73 FR 3316).

4. Public meeting

We do not now plan to hold a public meeting. But you may submit a request for one, using one of the methods specified under **ADDRESSES**. Please explain why you believe a public meeting would be beneficial. If we determine that one would aid this rulemaking, we will hold one at a time and place announced by a later notice in the **Federal Register**.

B. Regulatory History and Information

The Patriotic Air Show over the Atlantic Ocean in Virginia Beach, Virginia, is an annual event.

C. Basis and Purpose

The legal basis for the rule is the U.S. Coast Guard's authority to establish regulated navigation areas and other limited access areas: 33 U.S.C. 1231; 46 U.S.C. Chapter 701, 3306, 3703; 50 U.S.C. 191, 195; 33 CFR 1.05–1, 6.04–1, 6.04–6, 160.5; Public Law 107–295, 116 Stat. 2064; Department of Homeland Security Delegation No. 0170.1.

Whisper Concerts Entertainment, Inc. will host an air show event over the Atlantic Ocean in Virginia Beach, VA. In recent years, there have been unfortunate instances of jets and planes crashing during performances at air shows. In addition, there is typically a wide area of scattered debris that also damages property and could cause significant injury or death to mariners observing the air show. In order to protect mariners and the public transiting the Atlantic Ocean immediately below the air show from hazards associated with the air show, the Coast Guard proposes to establish a safety zone.

D. Discussion of the Proposed Rule

The Captain of the Port of Hampton Roads proposes to establish a safety

zone on specified waters of the Atlantic Ocean bounded by the following coordinates: 36° – 49′ – 50″ N/ 075° – 58′ – 02″ W, 36° – 51′ – 46″ N/ 075° – 58′ – 33″ W, 36° – 51′ – 53″N/ 075° – 57′ – 57″ W, 36° – 49′ – 57″N/ 075° – 57′ – 26″ W (NAD 1983), in the vicinity of Virginia Beach, Virginia. This safety zone will be enforced from May 30, 2014 until June 1, 2014 between the hours of 12 p.m. and 3:30 p.m. each day. Access to the safety zone will be restricted during the specified dates and times.

Except for vessels authorized by the Captain of the Port or his Representative, no person or vessel may enter or remain in the safety zone during the time frame listed. The Captain of the Port will give notice of the enforcement of the safety zone by all appropriate means to provide the widest dissemination of notice among the affected segments of the public. This will include publication in the Local Notice to Mariners and Marine Information Broadcasts.

E. Regulatory Analyses

We developed this proposed rule after considering numerous statutes and executive orders related to rulemaking. Below we summarize our analyses based on these statutes and executive orders.

1. Regulatory Planning and Review

This proposed rule is not a significant regulatory action under section 3(f) of Executive Order 12866, Regulatory Planning and Review, as supplemented by Executive Order 13563, Improving Regulation and Regulatory Review, and does not require an assessment of potential costs and benefits under section 6(a)(3) of Executive Order 12866 or under section 1 of Executive Order 13563. The Office of Management and Budget has not reviewed it under those Orders. The primary impact of these regulations will be on vessels wishing to transit the affected waterways during the safety zone on the Atlantic Ocean in the vicinity of Virginia Beach, VA from 12 9.m. until 3:30 p.m. on May 30, 2014 through June 1, 2014. Although these proposed regulations prevent traffic from transiting a portion of the Atlantic Ocean during these events, that restriction is limited in duration, affects only a limited area, and will be well publicized to allow mariners to make alternative plans for transiting the affected area.

2. Impact on Small Entities

The Regulatory Flexibility Act of 1980 (RFA), 5 U.S.C. 601–612, as amended, requires federal agencies to consider the potential impact of regulations on small entities during rulemaking. The term ''small entities'' comprises small businesses, not-for-profit organizations that are independently owned and operated and are not dominant in their fields, and governmental jurisdictions with populations of less than 50,000. The Coast Guard certifies under 5 U.S.C. 605(b) that this proposed rule will not have a significant economic impact on a substantial number of small entities.

This proposed rule will affect the following entities, some of which might be small entities: the owners or operators of vessels intending to transit or anchor in waters of the Atlantic Ocean during the outlined timeframe.

This proposed safety zone will not have a significant economic impact on a substantial number of small entities for the following reasons: (i) The safety zone will only be in place for a limited duration, and (ii) before the enforcement period, maritime advisories will be issued allowing mariners to adjust their plans accordingly.

3. Assistance for Small Entities

Under section 213(a) of the Small Business Regulatory Enforcement Fairness Act of 1996 (Pub. L. 104–121), we want to assist small entities in understanding this proposed rule. If the rule would affect your small business, organization, or governmental jurisdiction and you have questions concerning its provisions or options for compliance, please contact the person listed in the **FOR FURTHER INFORMATION CONTACT**, above.

Small businesses may send comments on the actions of Federal employees who enforce, or otherwise determine compliance with, Federal regulations to the Small Business and Agriculture Regulatory Enforcement Ombudsman and the Regional Small Business Regulatory Fairness Boards. The Ombudsman evaluates these actions annually and rates each agency's responsiveness to small business. If you wish to comment on actions by employees of the Coast Guard, call 1–888–REG–FAIR (1–888–734–3247). The Coast Guard will not retaliate against small entities that question or complain about this rule or any policy or action of the Coast Guard.

4. Collection of Information

This proposed rule will not call for a new collection of information under the Paperwork Reduction Act of 1995 (44 U.S.C. 3501–3520).

5. Federalism

A rule has implications for federalism under Executive Order 13132, Federalism, if it has a substantial direct effect on the States, on the relationship between the national government and the States, or on the distribution of power and responsibilities among the various levels of government. We have analyzed this proposed rule under that Order and determined that this rule does not have implications for federalism.

6. Protest Activities

The Coast Guard respects the First Amendment rights of protesters. Protesters are asked to contact the person listed in the **FOR FURTHER INFORMATION CONTACT** section to coordinate protest activities so that your message can be received without jeopardizing the safety or security of people, places or vessels.

7. Unfunded Mandates Reform Act

The Unfunded Mandates Reform Act of 1995 (2 U.S.C. 1531–1538) requires Federal agencies to assess the effects of their discretionary regulatory actions. In particular, the Act addresses actions that may result in the expenditure by a State, local, or tribal government, in the aggregate, or by the private sector of $100,000,000 (adjusted for inflation) or more in any one year. Though this proposed rule will not result in such an expenditure, we do discuss the effects of this rule elsewhere in this preamble.

8. Taking of Private Property

This proposed rule will not cause a taking of private property or otherwise have taking implications under Executive Order 12630, Governmental Actions and Interference with Constitutionally Protected Property Rights.

9. Civil Justice Reform

This proposed rule meets applicable standards in sections 3(a) and 3(b)(2) of Executive Order 12988, Civil Justice Reform, to minimize litigation, eliminate ambiguity, and reduce burden.

10. Protection of Children

We have analyzed this proposed rule under Executive Order 13045, Protection of Children from Environmental Health Risks and Safety Risks. This proposed rule is not an economically significant rule and does not create an environmental risk to health or risk to safety that may disproportionately affect children.

11. Indian Tribal Governments

This proposed rule does not have tribal implications under Executive Order 13175, Consultation and

Coordination with Indian Tribal Governments, because it does not have a substantial direct effect on one or more Indian tribes, on the relationship between the Federal Government and Indian tribes, or on the distribution of power and responsibilities between the Federal Government and Indian tribes.

12. Energy Effects

This proposed rule is not a ''significant energy action'' under Executive Order 13211, Actions Concerning Regulations That Significantly Affect Energy Supply, Distribution, or Use.

13. Technical Standards

This proposed rule does not use technical standards. Therefore, we did not consider the use of voluntary consensus standards.

14. Environment

We have analyzed this proposed rule under Department of Homeland Security Management Directive 023–01 and Commandant Instruction M16475.lD, which guide the Coast Guard in complying with the National Environmental Policy Act of 1969 (NEPA) (42 U.S.C. 4321–4370f), and have determined that this action is one of a category of actions that do not individually or cumulatively have a significant effect on the human environment. This proposed rule involves the establishment of a safety zone. This proposed rule is categorically excluded from further review under paragraph 34–g of Figure 2–1 of the Commandant Instruction. An environmental analysis checklist supporting this determination and a Categorical Exclusion Determination are available in the docket where indicated under **ADDRESSES**. We seek any comments or information that may lead to the discovery of a significant environmental impact from this proposed rule.

List of Subjects in 33 CFR Part 165

Harbors, Marine safety, Navigation (water), Reporting and recordkeeping requirements, Security measures, Waterways.

For the reasons discussed in the preamble, the Coast Guard proposes to amend 33 CFR part 165 as follows:

PART 165—REGULATED NAVIGATION AREAS AND LIMITED ACCESS AREAS

■ 1. The authority citation for part 165 continues to read as follows:

Authority: 33 U.S.C. 1231; 46 U.S.C. Chapter 701, 3306, 3703; 50 U.S.C. 191, 195; 33 CFR 1.05–1, 6.04–1, 6.04–6, 160.5; Pub. L. 107–295, 116 Stat. 2064; Department of Homeland Security Delegation No. 0170.1.

■ 2. Add § 165.T05–0007 to read as follows:

165.T05–0007 Safety Zone, Atlantic Ocean; Virginia Beach, VA.

(a) Definitions. For the purposes of this section, Captain of the Port means the Commander, Sector Hampton Roads. *Representative* means any Coast Guard commissioned, warrant or petty officer who has been authorized to act on the behalf of the Captain of the Port

(b) Location. The following area is a proposed safety zone: specified waters of the Captain of the Port Sector Hampton Roads zone, as defined in 33 CFR 3.25–10, in the vicinity of the Atlantic Ocean in Virginia Beach, VA bound by the following coordinates: 36° – 49′ – 50″ N/075° – 58′ – 02″ W, 36° – 51′ – 46″ N/075° – 58′ – 33″ W, 36° – 51′ – 53″ N/075° – 57′ – 57″ W, 36° – 49′ – 57″ N/075° – 57′ – 26″ W (NAD 1983).

(c) Regulations. (1) In accordance with the general regulations in 165.23 of this part, entry into this zone is prohibited unless authorized by the Captain of the Port, Hampton Roads or his designated representatives.

(2) The operator of any vessel in the immediate vicinity of this safety zone shall:

(i) Contact on scene contracting vessels via VHF channel 13 and 16 for passage instructions.

(ii) If on scene proceed as directed by any commissioned, warrant or petty officer on shore or on board a vessel that is displaying a U.S. Coast Guard Ensign.

(3) The Captain of the Port, Hampton Roads can be reached through the Sector Duty Officer at Sector Hampton Roads in Portsmouth, Virginia at telephone number (757) 668–5555.

(4) The Coast Guard Representatives enforcing the safety zone can be contacted on VHF–FM marine band radio channel 13 (165.65Mhz) and channel 16 (156.8 Mhz).

(d) Enforcement Period: This section will be enforced from 12 p.m. until 3:30 p.m. each day from May 30, 2014 to June 1, 2014.

Dated: February 19, 2014.

John K. Little,

Captain, U.S. Coast Guard, Captain of the Port Hampton Roads.

[FR Doc. 2014–07603 Filed 4–4–14; 8:45 am]

BILLING CODE 9110–04–P

ENVIRONMENTAL PROTECTION AGENCY

40 CFR Part 52

[EPA–R05–OAR–2014–0117; FRL–9907–51-Region 5]

Approval and Promulgation of Air Quality Implementation Plans; Illinois; 10-Year FESOP Amendments

AGENCY: Environmental Protection Agency (EPA).

ACTION: Proposed rule.

SUMMARY: The Environmental Protection Agency (EPA) is proposing to approve Illinois' rule revision to extend permit terms for the initial permit or renewal of Federally Enforceable State Operating Permits (FESOPs) from five years to ten years. Illinois submitted this rule revision for approval on January 9, 2014. FESOPs enable non-major sources to obtain Federally enforceable limits that keep them below certain Clean Air Act applicability thresholds.

DATES: Comments must be received on or before May 7, 2014.

ADDRESSES: Submit your comments, identified by Docket ID No. EPA–R05–OAR–2014–0117, by one of the following methods:

1. *www.regulations.gov:* Follow the on-line instructions for submitting comments.
2. Email: *damico.genevieve@epa.gov.*
3. Fax: (312) 886–0968.
4. Mail: Genevieve Damico, Chief, Air Permits Section, Air Programs Branch (AR–18J), U.S. Environmental Protection Agency, 77 West Jackson Boulevard, Chicago, Illinois 60604.
5. Hand Delivery: Genevieve Damico, Chief, Air Permits Section, Air Programs Branch (AR–18J), U.S. Environmental Protection Agency, 77 West Jackson Boulevard, Chicago, Illinois 60604. Such deliveries are only accepted during the Regional Office normal hours of operation, and special arrangements should be made for deliveries of boxed information. The Regional Office official hours of business are Monday through Friday, 8:30 a.m. to 4:30 p.m., excluding Federal holidays.

Please see the direct final rule which is located in the Rules section of this **Federal Register** for detailed instructions on how to submit comments.

FOR FURTHER INFORMATION CONTACT: Constantine Blathras, Environmental Engineer, Air Permits Section, Air Programs Branch (AR–18J), Environmental Protection Agency, Region 5, 77 West Jackson Boulevard, Chicago, Illinois 60604, (312) 886–0671, *Blathras.constantine@epa.gov.*

SUPPLEMENTARY INFORMATION: In the Final Rules section of this **Federal Register**, EPA is approving the State's SIP submittal as a direct final rule without prior proposal because the Agency views this as a noncontroversial submittal and anticipates no adverse comments. A detailed rationale for the approval is set forth in the direct final rule. If no adverse comments are received in response to this rule, no further activity is contemplated. If EPA receives adverse comments, the direct final rule will be withdrawn and all public comments received will be addressed in a subsequent final rule based on this proposed rule. EPA will not institute a second comment period. Any parties interested in commenting on this action should do so at this time. Please note that if EPA receives adverse comment on an amendment, paragraph, or section of this rule and if that provision may be severed from the remainder of the rule, EPA may adopt as final those provisions of the rule that are not the subject of an adverse comment. For additional information, see the direct final rule which is located in the Rules section of this **Federal Register**.

Dated: February 24, 2014.

Susan Hedman,

Regional Administrator, Region 5.

[FR Doc. 2014–07561 Filed 4–4–14; 8:45 am]

BILLING CODE 6560–50–P

ENVIRONMENTAL PROTECTION AGENCY

40 CFR Part 300

[EPA–HQ–SFUND–2003–0009; FRL–9908–79–Region 10]

National Oil and Hazardous Substances Pollution Contingency Plan; National Priorities List: Deletion of the Harbor Oil Superfund Site

AGENCY: Environmental Protection Agency (EPA).

ACTION: Proposed rule; notice of intent.

SUMMARY: The Environmental Protection Agency (EPA) Region 10 is issuing a Notice of Intent to Delete Harbor Oil Superfund Site (Site) located in Portland, Oregon, from the National Priorities List (NPL) and requests public comments on this proposed action. The NPL, promulgated pursuant to section 105 of the Comprehensive Environmental Response, Compensation, and Liability Act (CERCLA) of 1980, as amended, is an appendix of the National Oil and Hazardous Substances Pollution Contingency Plan (NCP). EPA and the State of Oregon, through the Department of Environmental Quality, have determined that all appropriate response actions under CERCLA have been completed. This deletion does not preclude future actions under Superfund or under state law.

DATES: Comments must be received by May 7, 2014.

ADDRESSES: Submit your comments, identified by Docket ID no. EPA–HQ–SFUND–2003–0009, by one of the following methods:

- *http://www.regulations.gov.* Follow on-line instructions for submitting comments.
- Email: By sending an email to EPA Project Manager Christopher Cora at *cora.christopher@epa.gov.*
- Fax: (206) 553–0124
- Mail: Christopher Cora, U.S. Environmental Protection Agency, 1200 Sixth Avenue, Suite 900, Seattle WA 98101–3140.
- Hand delivery: U.S. Environmental Protection Agency, 1200 Sixth Avenue, Suite 900, MS ECL–115, Seattle WA 98101–3140.

Such deliveries are accepted only during the Docket's normal hours of operation. Special arrangements should be made for deliveries of boxed information.

Instructions: Direct your comments to Docket ID no. EPA–HQ–SFUND–2003–0009. EPA's policy is that all comments received will be included in the public docket without change and may be made available online at *http://www.regulations.gov*, including any personal information provided, unless the comment includes information claimed to be Confidential Business Information (CBI) or other information whose disclosure is restricted by statute. Do not submit information that you consider to be CBI or otherwise protected through *http://www.regulations.gov* or email. The *http://www.regulations.gov* Web site is an ''anonymous access'' system, which means EPA will not know your identity or contact information unless you provide it in the body of your comment. If you send an email comment directly to EPA without going through *http://www.regulations.gov*, your email address will be captured automatically and included as part of the comment that is placed in the public docket and made available on the Internet. If you submit an electronic comment, EPA recommends that you include your name and other contact information in the body of your comment and with any disk or CD–ROM you submit. If EPA cannot read your comment due to technical difficulties and cannot contact you for clarification, EPA may not be able to consider your comment. Electronic files should avoid the use of special characters, any form of encryption, and should be free of any defects or viruses.

Docket

All documents in the docket are listed in the *http://www.regulations.gov* index. Although listed in the index, some information is not publicly available, e.g., CBI or other information whose disclosure is restricted by statute. Certain other material, such as copyrighted material, will be publicly available only in the hard copy. Publicly available docket materials are available either electronically at *http://www.regulations.gov* or in hard copy at:

EPA Superfund Records Center, 1200 6th Ave, 7th floor, Seattle, WA 98101–3140.

Historic Kenton Firehouse, 8105 North Brandon St, Portland, OR 97217, 503–823–0215.

FOR FURTHER INFORMATION CONTACT: Christopher Cora, Remedial Project Manager, U.S. Environmental Protection Agency, Region 10, Suite 900, 1200 Sixth Avenue, Seattle, WA 98101–3140, (206) 553–1478, *cora.christopher@epa.gov.*

SUPPLEMENTARY INFORMATION:

Table of Contents:

I. Introduction
II. NPL Deletion Criteria
III. Deletion Procedures
IV. Basis for Intended Site Deletion

I. Introduction

EPA Region 10 announces its intent to delete the Harbor Oil Superfund Site from the National Priorities List (NPL) and requests public comment on this proposed action. The NPL constitutes Appendix B of 40 CFR part 300, which is the National Oil and Hazardous Substances Pollution Contingency Plan (NCP), which EPA promulgated pursuant to section 105 of the Comprehensive Environmental Response, Compensation, and Liability Act (CERCLA) of 1980, as amended. EPA maintains the NPL as the list of sites that appear to present a significant risk to public health, welfare, or the environment. Sites on the NPL may be the subject of remedial actions financed by the Hazardous Substance Superfund (Fund). As described in 40 CFR 300.425(e)(3) of the NCP, sites deleted from the NPL remain eligible for Fund-financed remedial actions if future conditions warrant such actions.

EPA will accept comments on the proposal to delete this site for thirty (30)

days after publication of this document in the **Federal Register**.

Section II of this document explains the criteria for deleting sites from the NPL. Section III discusses procedures that EPA is using for this action. Section IV discusses the Harbor Oil Superfund Site and demonstrates how it meets the deletion criteria.

II. NPL Deletion Criteria

The NCP establishes the criteria that EPA uses to delete sites from the NPL. In accordance with 40 CFR 300.425(e), sites may be deleted from the NPL where no further response is appropriate. In making such a determination pursuant to 40 CFR 300.425(e), EPA will consider, in consultation with the State, whether any of the following criteria have been met:

i. Responsible parties or other persons have implemented all appropriate response actions required;

ii. All appropriate Fund-financed response under CERCLA has been implemented, and no further response action by responsible parties is appropriate; or

iii. The remedial investigation has shown that the release poses no significant threat to public health or the environment and, therefore, the taking of remedial measures is not appropriate.

III. Deletion Procedures

The following procedures apply to deletion of the Site:

(1) EPA consulted with the State before developing this Notice of Intent to Delete.

(2) EPA has provided the state 30 working days for review of this notice prior to publication of it today.

(3) In accordance with the criteria discussed above, EPA has determined that no further response is appropriate.

(4) The State of Oregon, through the Department of Environmental Quality, has concurred with deletion of the Site from the NPL.

(5) Concurrently with the publication of this Notice of Intent to Delete in the **Federal Register**, a notice is being published in a major local newspaper, The Oregonian. The newspaper notice announces the 30-day public comment period concerning the Notice of Intent to Delete the site from the NPL.

(6) EPA placed copies of documents supporting the proposed deletion in the deletion docket and made these items available for public inspection and copying at the Site information repositories identified above.

If comments are received within the 30-day public comment period on this Notice of Intent to Delete, EPA will evaluate and respond appropriately to the comments before making a final decision. If necessary, EPA will prepare a Responsiveness Summary to address any significant public comments received. After the public comment period, if EPA determines it is still appropriate to delete the Site, the Regional Administrator will publish a final Notice of Deletion in the **Federal Register**. Public notices, public submissions and copies of the Responsiveness Summary, if prepared, will be made available to interested parties and in the site information repositories listed above.

Deletion of a site from the NPL does not itself create, alter, or revoke any individual's rights or obligations. Deletion of a site from the NPL does not in any way alter EPA's right to take enforcement actions, as appropriate. The NPL is designed primarily for informational purposes and to assist EPA management. Section 300.425(e)(3) of the NCP states that the deletion of a site from the NPL does not preclude eligibility for future response actions, should future conditions warrant such actions.

IV. Basis for Site Deletion

The following information provides EPA's rationale for deleting the Site from the NPL:

Site Background and History

The Harbor Oil Superfund Site (CERCLIS ID No.: ORD071803985) is a 4.2-acre used oil reprocessing facility located at 11535 North Force Avenue in northeast Portland, Multnomah County, Oregon. American Petroleum Environmental Services is the current operator. The facility began cleaning tanker trucks and recycling oil in the 1950s to 1960s. A fire destroyed the facility in 1979, which released pollutants into the wetlands and Force Lake. The presence of pollutants released into the environment can be associated with cattle truck and tanker truck cleaning operations, road oiling for dust suppression, oil treatment and processing activities, the 1979 facility fire, pesticide usage at historical stockyards and in the city of Vanport, and storm water drainage patterns. The contaminants include petroleum products, polyaromatic hydrocarbons, volatile organic compounds (VOCs), semi-volatile organic compounds (SVOCs), metals, polychlorinated biphenyls (PCBs) and possibly other contaminants, such as solvents and/or pesticides such as dichlorodiphenyltrichloroethane (DDT) and metals at the Site. The Site was proposed to the NPL on September 5, 2002 (67 FR 56794). The Site was listed on the NPL on September 29, 2003 (68 FR 55875).

Remedial Investigation and Feasibility Study (RI/FS)

The RI included sampling soil (213 samples), groundwater (34 samples), sediments (17 samples) and surface water (3 samples) for the following chemicalgroups: Total petroleum hydrocarbons, polyaromatic hydrocarbons, volatileorganic compounds, semi-volatile organic compounds, metals, pesticides, and polychlorinated biphenyls. The RI sampling indicated site contamination was not significant. The maximum DDT concentration was 78 mg/Kg in soils and 0.210 mg/Kg in sediments. The maximum PCB concentration was 32 mg/Kg in soils and 0.131 mg/Kg in sediments. The maximum soil concentrations were all on the facility property and are covered by asphalt; therefore there is no completed exposure pathway. Petroleum contamination was ubiquitous throughout the site but did not pose unacceptable risk and was highly weathered and not mobile; for example, it was not in groundwater or surfacewater above screening levels. Petroleum screening levels are represented by the lowest available screening levels from EPA or Oregon Department of Environmental Quality. Metals, specifically chrome, copper, and zinc, exceeded ecological screening values but were limited in areal extent and posed only slightly elevated risks to terrestrial invertebrates. VOCs and SVOCs were rarely detected. Benzene (concentration of 0.140 mg/L) and trichloroethylene (concentration of 0.0061 mg/L in 2000) were detected above drinking water maximum contaminant levels once each in different groundwater wells. Based on the observation of terrestrial invertebrates (earthworms) at sampling locations with elevated metals, it was concluded the impacts were not significant, probably because the areal extent of contamination was small and the elevated Hazard Indices were due to the use of conservative reference values. The tables in the appendix reflect the findings of the baseline human health and ecological risk assessments (Tables 1 and 2). In summary, the results of the risk assessment concluded that there are no unacceptable risks posed by releases from the site. Unacceptable risks were those that result in risks exceeding EPA's target risk threshold of 1E–4 for cancer risk or an HI greater than 1 for human health. Ecological risks were determined to be acceptable, having no impacts on the ecological community of

the Site. There are no endangered species present at the Site. A FS was not prepared because the risks were acceptable.

Selected Remedy

A No Action remedy was selected for the site because the Human Health Baseline Risk Assessment and the Baseline Ecological Risk Assessment showed that releases from the Site posed risks within EPA's acceptable risk range. No response actions were necessary to mitigate releases from the Site.

Cleanup Goals

Since there was no unacceptable risk and a response action was not necessary, cleanup objectives were not established.

Operation and Maintenance—if Applicable

Because no response actions were taken, there are no operation or maintenance obligations at the Site.

Five-Year Review—if Applicable

Five Year Reviews are not applicable because no response actions were taken.

Community Involvement

A Technical Assistance Grant was provided to the Harbor Oil Community Action Group (HOGAG). Meetings of the HOCAG took place on a monthly basis during the RI and were reduced when site activities slowed down. Approximately 10 citizens made up the HOCAG, but they distributed information throughout the North Portland neighborhood where the site is located. EPA provided a 30-day public review and comment period on the proposed No Action remedy on November 14, 2012. EPA held a public meeting on December 6, 2012 to present the proposed remedy of No Action and receive public comments. EPA responded to all comments in the responsiveness summary for the Record of Decision, with no change to the proposed remedy.

Determination That the Site Meets the Criteria for Deletion in the NCP

The remedial investigation has shown that the releases pose no significant threat to public health or the environment and therefore no further Superfund response is needed to protect human health or the environment at the Site.

The NCP (40 CFR 300.425(e)) states that a site may be deleted from the NPL when no further response action is appropriate. EPA, in consultation with the State of Oregon, has determined that all response actions required by CERCLA have been implemented, and no further CERCLA response action by EPA or the responsible parties is appropriate.

List of Subjects in 40 CFR Part 300

Environmental protection, Air pollution control, Chemicals, Hazardous substances, Hazardous waste, Intergovernmental relations, Penalties, Reporting and recordkeeping requirements, Superfund, Water pollution control, Water supply.

Authority: 33 U.S.C. 1321(c)(2); 42 U.S.C. 9601–9657; E.O. 12777, 56 FR 54757, 3 CFR, 1991 Comp., p.351; E.O. 12580, 52 FR 2923, 3 CFR, 1987 Comp., p.193.

Dated: March 10, 2014.

Dennis J. McLerran,

Regional Administrator.

[FR Doc. 2014–06815 Filed 4–4–14; 8:45 am]

BILLING CODE 6560–50–P

ENVIRONMENTAL PROTECTION AGENCY

48 CFR Part 1516 and 1552

[EPA–HQ–OARM–2013–0149; FRL–9908–87–OARM]

EPAAR Clause for Ordering by Designated Ordering Officers

AGENCY: Environmental Protection Agency (EPA).

ACTION: Proposed rule.

SUMMARY: The Environmental Protection Agency (EPA) amends the EPA Acquisition Regulation (EPAAR) to update policy, procedures, and contract clauses. The proposed rule updates the *Ordering—By Designated Ordering Officers* clause and corresponding prescription.

DATES: Comments must be received on or before May 7, 2014.

ADDRESSES: Submit your comments, identified by Docket ID No. EPA–HQ–OARM–2013–0149, by one of the following methods:

- *www.regulations.gov*: Follow the on-line instructions for submitting comments.
- Email: *valentino.thomas@epa.gov.*
- Mail: EPA–HQ–OARM–2013–0149, OEI Docket, Environmental Protection Agency, 2822T, 1200 Pennsylvania Ave. NW., Washington, DC 20460. Please include a total of three (3) copies.
- Hand Delivery: EPA Docket Center-Attention OEI Docket, EPA West, Room B102, 1301 Constitution Ave. NW., Washington, DC 20004. Such deliveries are only accepted during the Docket's normal hours of operation, and special arrangements should be made for deliveries of boxed information.

Instructions: Direct your comments to Docket ID No. EPA–HQ–OARM–2013–0149. EPA's policy is that all comments received will be included in the public docket without change, and may be made available online at *www.regulations.gov*, including any personal information provided, unless the comment includes information claimed to be Confidential Business Information (CBI) or other information whose disclosure is restricted by statute. Do not submit information that you consider to be CBI or otherwise protected through *www.regulations.gov* or email. The *www.regulations.gov* Web site is an ''anonymous access'' system, which means EPA will not know your identity or contact information unless you provide it in the body of your comment. If you send an email comment directly to EPA without going through *www.regulations.gov*, your email address will be automatically captured and included as part of the comment that is placed in the public docket, and made available on the Internet. If you submit an electronic comment, EPA recommends that you include your name and other contact information in the body of your comment, and with any disk or CD–ROM you submit. If EPA cannot read your comment due to technical difficulties, and cannot contact you for clarification, EPA may not be able to consider your comment. Electronic files should avoid the use of special characters, any form of encryption, and be free of any defects or viruses. For additional information about EPA's public docket, visit the EPA Docket Center homepage at *http://www.epa.gov/epahome/dockets.htm.*

Docket: All documents in the docket are listed in the *www.regulations.gov* index. Although listed in the index, some information is not publicly available, e.g., CBI or other information whose disclosure is restricted by statute. Certain other material, such as copyrighted material, will be publicly available only in hard copy. Publicly available docket materials are available either electronically in *www.regulations.gov*, or in hard copy at the Office of Environmental Information (OEI) Docket, EPA/DC, EPA West, Room 3334, 1301 Constitution Ave. NW., Washington, DC. The Public Reading Room is open from 8:30 a.m. to 4:30 p.m., Monday through Friday, excluding legal holidays. The telephone number for the Public Reading Room is (202) 566–1744, and the telephone number for the EPA Docket Center is (202) 566–1752. This Docket Facility is open from

8:30 a.m. to 4:30 p.m. Monday through Friday, excluding legal holidays.

FOR FURTHER INFORMATION CONTACT: Thomas Valentino, Policy, Training, and Oversight Division, Office of Acquisition Management (3802R), Environmental Protection Agency, 1200 Pennsylvania Ave. NW., Washington, DC 20460; telephone number: 202–564–4522; email address: *valentino.thomas@epa.gov.*

SUPPLEMENTARY INFORMATION:

I. General Information

1. *Submitting CBI.* Do not submit this information to EPA through *www.regulations.gov* or email. Clearly mark the part or all of the information that you claim to be CBI. For CBI information in a disk or CD ROM that you mail to EPA, mark the outside of the disk or CD ROM as CBI, and then identify electronically within the disk or CD ROM the specific information that is claimed as CBI. In addition to one complete version of the comment that includes information claimed as CBI, a copy of the comment that does not contain the information claimed as CBI must be submitted for inclusion in the public docket. Information so marked will not be disclosed except in accordance with procedures set forth in 40 CFR Part 2.

2. *Tips for Preparing Your Comments.* When submitting comments, remember to:

- Identify the rulemaking by docket number and other identifying information (subject heading, **Federal Register** date and page number).
- Follow directions—The Agency may ask you to respond to specific questions or organize comments by referencing a Code of Federal Regulations (CFR) part or section number.
- Explain why you agree or disagree, suggest alternatives, and substitute language for your requested changes.
- Describe any assumptions and provide any technical information and/or data that you used.
- If you estimate potential costs or burdens, explain how you arrived at your estimate in sufficient detail to allow for it to be reproduced.
- Provide specific examples to illustrate your concerns, and suggest alternatives.
- Explain your views as clearly as possible, avoiding the use of profanity or personal threats.
- Make sure to submit your comments by the comment period deadline identified.

II. Background

The subject clause is currently codified in the EPAAR as the April 1984 basic clause without any alternates. The basic clause only contemplates order issuance prior to receiving formal input from the contractor. On December 21, 1989, a class deviation was issued to prescribe an alternate to the clause that provides for negotiating the terms and conditions of a task/delivery order prior to order issuance. There are several benefits to negotiation prior to order issuance: The Government is not charged directly for the time involved in negotiations and the associated costs are part of bid and proposal costs which are indirect charges spread across all Government contracts; it allows for more accurate pricing for the order, and it enables the Government to hold the Contractor to negotiated requirements as soon as the order is issued. As a result, the subject clause and corresponding prescription are being updated to add the 1989 class deviation. Because the class deviation provides several benefits that the basic clause does not, it will be designated as the basic form of the Ordering clause, and the previous basic form is being re-designated as Alternate I. In addition, the EPAAR 1516.505(a) subject clause prescription is being updated accordingly.

III. Proposed Rule

This proposed rule updates the EPAAR 1516.505(a) clause prescription, and amends EPAAR 1552.216–72 to add an alternate version to the *Ordering—By Designated Ordering Officers* clause.

IV. Statutory and Executive Order Reviews

A. Executive Order 12866: Regulatory Planning and Review

This action is not a ''significant regulatory action'' under the terms of Executive Order (EO) 12866 (58 FR 51735, October 4, 1993) and therefore, not subject to review under the EO.

B. Paperwork Reduction Act

This action does not impose an information collection burden under the provisions of the Paperwork Reduction Act, 44 U.S.C. 3501 et seq. No information is collected under this action.

C. Regulatory Flexibility Act (RFA), as Amended by the Small Business Regulatory Enforcement Fairness Act of 1996 (SBREFA), 5 U.S.C. 601 et seq.

The Regulatory Flexibility Act generally requires an agency to prepare a regulatory flexibility analysis of any rule subject to notice and comment rulemaking requirements under the Administrative Procedure Act or any other statute; unless the agency certifies that the rule will not have a significant economic impact on a substantial number of small entities. Small entities include small businesses, small organizations, and small governmental jurisdictions.

For purposes of assessing the impact of today's final rule on small entities, ''small entity'' is defined as: (1) A small business that meets the definition of a small business found in the Small Business Act and codified at 13 CFR 121.201; (2) a small governmental jurisdiction that is a government of a city, county, town, school district or special district with a population of less than 50,000; and (3) a small organization that is any not-for-profit enterprise which is independently owned and operated and is not dominant in its field.

After considering the economic impacts of this rule on small entities, I certify that this action will not have a significant economic impact on a substantial number of small entities. This action revises a current EPAAR provision and does not impose requirements involving capital investment, implementing procedures, or record keeping. This rule will not have a significant economic impact on small entities.

D. Unfunded Mandates Reform Act

Title II of the Unfunded Mandates Reform Act of 1995 (UMRA), Public Law 104–4, establishes requirements for Federal agencies to assess the effects of their regulatory actions on State, Local, and Tribal governments and the private sector.

This rule contains no Federal mandates (under the regulatory provisions of the Title II of the UMRA) for State, Local, and Tribal governments or the private sector. The rule imposes no enforceable duty on any State, Local or Tribal governments or the private sector. Thus, the rule is not subject to the requirements of Sections 202 and 205 of the UMRA.

E. Executive Order 13132: Federalism

Executive Order 13132, entitled ''Federalism'' (64 FR 43255, August 10, 1999), requires EPA to develop an accountable process to ensure ''meaningful and timely input by State and Local officials in the development of regulatory policies that have federalism implications.'' ''Policies that have federalism implications'' is defined in the Executive Order to include regulations that have ''substantial direct effects on the States,

on the relationship between the national government and the States, or on the distribution of power and responsibilities among the various levels of government.''

This rule does not have federalism implications. It will not have substantial direct effects on the States, on the relationship between the national government and the States, or on the distribution of power and responsibilities among the various levels of government as specified in Executive Order 13132.

F. Executive Order 13175: Consultation and Coordination With Indian Tribal Governments

Executive Order 13175, entitled ''Consultation and Coordination with Indian Tribal Governments'' (65 FR 67249, November 9, 2000), requires EPA to develop an accountable process to ensure ''meaningful and timely input by tribal officials in the development of regulatory policies that have tribal implications.'' This rule does not have tribal implications as specified in Executive Order 13175.

G. Executive Order 13045: Protection of Children From Environmental Health and Safety Risks

Executive Order 13045, entitled ''Protection of Children from Environmental Health and Safety Risks'' (62 FR 19885, April 23, 1997), applies to any rule that: (1) Is determined to be economically significant as defined under Executive Order 12886, and (2) concerns an environmental health or safety risk that may have a proportionate effect on children. This rule is not subject to Executive Order 13045 because it is not an economically significant rule as defined by Executive Order 12866, and because it does not involve decisions on environmental health or safety risks.

H. Executive Order 13211: Actions That Significantly Affect Energy Supply, Distribution, or Use

This proposed rule is not subject to Executive Order 13211, ''Actions Concerning Regulations That Significantly Affect Energy Supply, Distribution of Use'' (66 FR 28335 (May 22, 2001), because it is not a significant regulatory action under Executive Order 12866.

I. National Technology Transfer and Advancement Act of 1995 (NTTAA)

Section 12(d) (15 U.S.C 272 note) of NTTA, Public Law 104–113, directs EPA to use voluntary consensus standards in its regulatory activities unless to do so would be inconsistent with applicable law or otherwise impractical. Voluntary consensus standards are technical standards (e.g., materials specifications, test methods, sampling procedures and business practices) that are developed or adopted by voluntary consensus standards bodies. The NTTA directs EPA to provide Congress, through OMB, explanations when the Agency decides not to use available and applicable voluntary consensus standards.

This proposed rulemaking does not involve technical standards. Therefore, EPA is not considering the use of any voluntary consensus standards.

J. Executive Order 12898: Federal Actions to Address Environmental Justice in Minority Populations and Low-Income Populations

Executive Order (EO) 12898 (59 FR 7629 (Feb. 16, 1994) establishes federal executive policy on environmental justice. Its main provision directs federal agencies, to the greatest extent practicable and permitted by law, to make environmental justice part of their mission by identifying and addressing, as appropriate, disproportionately high and adverse human health or environmental effects of their programs, policies, and activities on minority populations and low-income populations in the United States.

EPA has determined that this proposed rule will not have disproportionately high and adverse human health or environmental effects on minority or low-income populations because it does not affect the level of protection provided to human health or the environment. This proposed rulemaking does not involve human health or environmental affects.

List of Subjects in 48 CFR Parts 1516 and 1552

Government procurement.

Dated: June 21, 2013.

John R. Bashista,

Director, Office of Acquisition Management.

Therefore, 48 CFR Chapter 15 is proposed to be amended as set forth below:

PART 1516—TYPES OF CONTRACTS

■ 1. The authority citation for 48 CFR part 1516 is revised to read as follows:

Authority: 5 U.S.C. 301; Sec. 205(c), 63 Stat. 390, as amended, 40 U.S.C. 486(c); and 41 U.S.C. 418b.

■ 2. Revise 1516.505(a) as follows:

1516.505 Contract clauses.

(a) The Contracting Officer shall insert the clause in 1552.216–72, *Ordering—By Designated Ordering Officers,* or a clause substantially similar to the subject clause, in indefinite delivery/indefinite quantity type solicitations and contracts. The Contracting Officer shall insert Alternate I when formal input from the Contractor will not be obtained prior to order issuance.

* * * * *

PART 1552—SOLICITATION PROVISIONS AND CONTRACT CLAUSES

■ 3. The authority citation for 48 CFR part 1552 continues to read as follows:

Authority: 5 U.S.C. 301; Sec. 205(c), 63 Stat. 390, as amended, 40 U.S.C. 486(c); and 41 U.S.C. 418b.

■ 4. Revise 1552.216–72 to read as follows:

1552.216–72 Ordering—by designated ordering officers.

As prescribed in 1516.505(a), insert the subject clause, or a clause substantially similar to the subject clause, in indefinite delivery/indefinite quantity type solicitations and contracts.

ORDERING—BY DESIGNATED ORDERING OFFICERS (_____ 2013)

(a) The Government will order any supplies and services to be furnished under this contract by issuing task/delivery orders on Optional Form 347, or an agency prescribed form, from _____ through _____. In addition to the Contracting Officer, the following individuals are authorized ordering officers.

_____

_____

(b) A Standard Form 30 will be the method of amending task/delivery orders.

(c) The Contractor shall acknowledge receipt of each order by having an authorized company officer sign either a copy of a transmittal letter or signature block on page 3 of the task/delivery order, depending upon which is provided, within ____ calendar days of receipt.

(d) Prior to the placement of any task/delivery order, the Contractor will be provided with a proposed Performance Work Statement/Statement of Work and will be asked to respond with detailed technical and cost proposals within ____ calendar days or less. The technical proposal will delineate the Contractor's interpretation for the execution of the PWS/SOW, and the pricing proposal will be the Contractor's best estimate for the hours, labor categories and all costs associated with the execution. The proposals are subject to negotiation. The Ordering Officer and the Contractor shall reach agreement on all the material terms of each order prior to the order being issued.

(e) Each task/delivery order issued will incorporate the Contractor's technical and cost proposals as negotiated with the Government, and will have a ceiling price which the contractor shall not exceed. When

the Contractor has reason to believe that the labor payment and support costs for the order which will accrue in the next thirty (30) days will bring total cost to over 85 percent of the ceiling price specified in the order, the Contractor shall notify the Ordering Officer.

(f) Under no circumstances will the Contractor start work prior to the issue date of the task/delivery order unless specifically authorized to do so by the Ordering Officer. Any verbal authorization will be confirmed in writing by the Ordering Officer or Contracting Officer within ____ calendar days.

(End of clause)

Alternate I. As prescribed in 1516.505(a), insert the subject clause, or a clause substantially similar to the subject clause, in indefinite delivery/indefinite quantity contracts when formal input from the Contractor will not be obtained prior to order issuance.

(a) The Government will order any supplies and services to be furnished under this contract by issuing task/delivery orders on Optional Form 347, or any agency prescribed form, from ___ through ___. In addition to the Contracting Officer, the following individuals are authorized ordering officers:

_____

_____

(b) A Standard Form 30 will be the method of amending task/delivery orders.

(c) The Contractor shall acknowledge receipt of each order and shall prepare and forward to the Ordering Officer within ____ calendar days the proposed staffing plan for accomplishing the assigned task within the period specified.

(d) If the Contractor considers the estimated labor hours or specified work completion date to be unreasonable, the Contractor shall promptly notify the Ordering Officer and Contracting Officer in writing within ____ calendar days, stating why the estimated labor hours or specified completion date is considered unreasonable.

(e) Each task/delivery order will have a ceiling price, which the Contractor may not exceed. When the Contractor has reason to believe that the labor payment and support costs for the order, which will accrue in the next thirty (30) days, will bring total cost to over 85 percent of the ceiling price specified in the order, the Contractor shall notify the Ordering Officer.

(f) Paragraphs (c), (d), and (e) of this clause apply only when services are being ordered.

(End of clause)

Editorial Note: This document was received by the Office of the Federal Register on March 26, 2014.

[FR Doc. 2014–07109 Filed 4–4–14; 8:45 am]

BILLING CODE 6560–50–P

DEPARTMENT OF TRANSPORTATION

Surface Transportation Board

49 CFR Chapter X

[Docket No. EP 722; Docket No. EP 664 (Sub-No. 2)]

Railroad Revenue Adequacy: Petition of the Western Coal Traffic League To Institute a Rulemaking Proceeding To Abolish the Use of the Multi-Stage Discounted Cash Flow Model in Determining the Railroad Industry's Cost of Equity Capital

AGENCY: Surface Transportation Board, DOT.

ACTION: Notice.

SUMMARY: The Surface Transportation Board will receive comments in Docket No. EP 722 to explore the Board's methodology for determining railroad revenue adequacy, as well as the revenue adequacy component used in judging the reasonableness of rail freight rates. The Board will also receive comments in Docket No. 664 (Sub-No. 2) on how it calculates the railroad industry's cost of equity capital. The Board is seeking written comments on these matters, as described below, and later will hold a hearing to address these issues.

DATES: Comments in both dockets are due on July 1, 2014. Reply comments are due on August 15, 2014. Following receipt of comments, the Board will schedule a public hearing at the Board's headquarters located at 395 E Street SW., Washington, DC, to allow participants to appear and discuss the submissions that were made. The Board will provide more details regarding the hearing in a future decision.

ADDRESSES: All filings may be submitted either via the Board's e-filing format or in the traditional paper format. Any person using e-filing should attach a document and otherwise comply with the instructions at the ''E–FILING'' link on the Board's ''*www.stb.dot.gov*'' Web site. Any person submitting a filing in the traditional paper format should send an original and 10 copies of the filing to: Surface Transportation Board, Attn: Docket No. [EP 722 or EP 664 (Sub-No. 2), as the case may be], 395 E Street SW., Washington, DC 20423–0001.

Copies of written submissions will be posted to the Board's Web site and will be available for viewing and self-copying in the Board's Public Docket Room, Suite 131. Copies of the submissions will also be available (for a fee) by contacting the Board's Chief Records Officer at (202) 245–0236 or 395 E Street SW., Washington, DC 20423–0001.

FOR FURTHER INFORMATION CONTACT: For EP 722: Scott Zimmerman at (202) 245–0386; for EP 664 (Sub-No. 2): Amy Ziehm at (202) 245–0391. Assistance for the hearing impaired is available through the Federal Information Relay Service (FIRS) at (800) 877–8339.

SUPPLEMENTARY INFORMATION: In Section 205 of the Railroad Revitalization and Regulatory Reform Act of 1976, Public Law 94–210, 90 Stat. 127, Congress mandated that the Board's predecessor, the Interstate Commerce Commission (ICC), promulgate—and thereafter revise and maintain—standards and procedures for establishing railroad revenue adequacy. Four years later, in the Staggers Rail Act of 1980 (Staggers), Public Law 96–448, 94 Stat. 1895, the agency's rail transportation policy was revised to include, among other things, ''promot[ing] a safe and efficient rail transportation system by allowing rail carriers to earn adequate revenues, as determined by the [agency].'' Additionally, Section 205 of Staggers required the ICC to begin determining annually ''which rail carriers are earning adequate revenues.'' To implement this requirement, the ICC began a proceeding to adopt standards for determining railroad revenue adequacy. In that proceeding, the ICC concluded that ''the only revenue adequacy standard consistent with the requirements of [Staggers] is one that uses a rate of return equal to the cost of capital.'' *Standards for R.R. Revenue Adequacy,* 364 I.C.C. 803, 811 (1981), *aff'd sub nom. Bessemer & Lake Erie R.R.* v. *ICC,* 691 F.2d 1104 (3d Cir. 1982).

These statutory requirements, now codified at 49 U.S.C. 10704(a)(2) and (3),[1] still govern, and the Board (like the ICC before it) annually determines

[1] Section 10704(a) of title 49 states with respect to adequate revenues:

* * * * *

(2) The Board shall maintain and revise as necessary standards and procedures for establishing revenue levels for rail carriers * * * that are adequate, under honest, economical, and efficient management, to cover total operating expenses, including depreciation and obsolescence, plus a reasonable and economic profit or return (or both) on capital employed in the business.* * * Revenue levels established under this paragraph should—

(A) provide a flow of net income plus depreciation adequate to support prudent capital outlays, assure the repayment of a reasonable level of debt, permit the raising of needed equity capital, and cover the effects of inflation; and

(B) attract and retain capital in amounts adequate to provide a sound transportation system in the United States.

(3) On the basis of the standards and procedures described in paragraph (2), the Board shall annually determine which rail carriers are earning adequate revenues.

which rail carriers are revenue adequate by comparing a carrier's rate of return with the cost of capital.[2] Since the issuance of *Standards for Railroad Revenue Adequacy* in 1981, adjustments have been made to the agency's methodology in order to improve the agency's ability to determine accurately revenue adequacy. *See, e.g., Use of a Multi-Stage Discounted Cash Flow Model in Determining the R.R. Industry's Cost of Capital,* EP 664 (Sub-No. 1) (STB served Jan. 28, 2009); *R.R. Revenue Adequacy—1988 Determination,* 6 I.C.C.2d 933 (1990), *aff'd sub nom. Ass'n of Amer. R.Rs.* v. *ICC,* 978 F.2d 737 (D.C. Cir. 1992); *Supplemental Reporting of Consol. Info. for Revenue Adequacy Purposes,* 5 I.C.C.2d 65 (1988); *Standards for R.R. Revenue Adequacy,* 3 I.C.C.2d 261 (1986), *aff'd sub nom. Consol. Rail Corp.* v. *United States,* 855 F.2d 78 (3d Cir. 1988).

* * * * *

The concept of revenue adequacy is also a component of the Board's standard for judging the reasonableness of rail freight rates, as set forth in *Coal Rate Guidelines, Nationwide* (*Coal Rate Guidelines*), 1 I.C.C.2d 520 (1985), *aff'd sub nom. Consol. Rail Corp.* v. *United States,* 812 F.2d 1444 (3d Cir. 1987).[3] *Coal Rate Guidelines* established a set of pricing principles known as ''constrained market pricing,'' which imposes three main constraints on the extent to which a railroad may charge differentially higher rates on captive traffic: Revenue adequacy, management efficiency, and stand-alone cost. *Id.* at 534.[4] With respect to the revenue adequacy constraint, the ICC observed

> [The] revenue adequacy standard represents a reasonable level of profitability for a healthy carrier. It fairly rewards the rail company's investors and assures shippers that the carrier will be able to meet their service needs for the long term. Carriers do not need greater revenues than this standard permits, and we believe that, in a regulated setting, they are not entitled to any higher revenues. Therefore, the logical first constraint on a carrier's pricing is that its rates not be designed to earn greater revenues than needed to achieve and maintain this ''revenue adequacy'' level.

Id. at 535.

As the Board has explained, the revenue adequacy constraint ''employ[s] a 'top-down' approach, examining the incumbent carrier's existing operations.'' *W. Texas Utils. Co.* v. *Burlington N. R.R.,* 1 S.T.B. 638, 655 (1996). ''If the carrier is revenue adequate (earning sufficient funds to cover its costs and provide a fair return on its investment), or would be revenue adequate after eliminating unnecessary costs from specifically identified inefficiencies in its operations, a complaining shipper may be entitled to rate relief.'' *Id.*

The Board has not yet had the opportunity to address how the revenue adequacy constraint would work in practice in large rail rate cases. Nearly all large rate reasonableness cases to date have relied upon the stand-alone cost constraint. The few revenue adequacy-based complaints have either settled or involved other transportation modes. *See S. Miss. Elec. Power Ass'n* v. *Norfolk S. Ry.,* NOR 42128 (STB served Aug. 31, 2011) (proceeding in which revenue adequacy constraint raised in complaint was subsequently settled); *CF Indus., Inc.* v. *Koch Pipeline Co.,* 4 S.T.B. 637 (2000) (finding rate increases for pipeline transportation unreasonable under 49 U.S.C. 15501 using revenue adequacy constraint), *aff'd sub nom. CF Indus., Inc.* v. *STB,* 255 F.3d 816 (D.C. Cir. 2001).

Both the structure of the rail industry and the flow of commerce have continued to change substantially over the past decade. In the last several years, questions have been raised regarding the agency's methodology for determining revenue adequacy and whether it appropriately measures the financial condition of the railroad industry. These questions cover a range of issues, such as the viability of the Board's current methodology and possible alternative methodologies, what it means to be revenue adequate and how such a finding should impact the railroads, and how to apply the revenue adequacy constraint in regulating rates, among many others.

At this point, the Board believes an examination of revenue adequacy is in order. The Board will now institute a proceeding to address the issues discussed above. This proceeding is intended as a public forum to discuss the Board's methodology in fulfilling its statutory mandate to determine railroad revenue adequacy, as well as the revenue adequacy component of the Board's standard for judging the reasonableness of rail freight rates, with a view to what, if any, changes the Board can and should consider. The Board is providing an opportunity for any person or entity that wishes to participate to file written prepared comments. Subsequently, the Board will hold an oral hearing at the agency to explore the issues in more depth.

The Board also recently instituted a rulemaking proceeding in Docket No. EP 664 (Sub-No. 2) to address how it determines the railroad industry's cost of equity capital.[5] The cost of capital calculation is a component of the methodology that the Board uses to determine revenue adequacy, and the Board therefore stated that it would coordinate the processing of these two proceedings. Accordingly, the Board now invites any person or entity who wishes to participate in EP 664 (Sub-No. 2) to submit written comments addressing the cost of capital calculation in that proceeding, pursuant to the schedule set forth below.

Decisions and notices of the Board, including this notice, are available on the Board's Web site at ''*www.stb.dot.gov.*''

This action will not significantly affect either the quality of the human environment or the conservation of energy resources.

It is ordered:

1. Comments in both dockets are due on July 1, 2014. Reply comments are due on August 15, 2014.

2. A public hearing will be announced in a subsequent Board decision.

3. This decision is effective on the date of service.

Decided: April 1, 2014.

---

[1] Section 10704(a) of title 49 states with respect to adequate revenues:

* * * * *

(2) The Board shall maintain and revise as necessary standards and procedures for establishing revenue levels for rail carriers * * * that are adequate, under honest, economical, and efficient management, to cover total operating expenses, including depreciation and obsolescence, plus a reasonable and economic profit or return (or both) on capital employed in the business.* * * Revenue levels established under this paragraph should—

(A) provide a flow of net income plus depreciation adequate to support prudent capital outlays, assure the repayment of a reasonable level of debt, permit the raising of needed equity capital, and cover the effects of inflation; and

(B) attract and retain capital in amounts adequate to provide a sound transportation system in the United States.

(3) On the basis of the standards and procedures described in paragraph (2), the Board shall annually determine which rail carriers are earning adequate revenues.

[2] The Board annually publishes the annual rates of return of each Class I railroad, as well as the cost of capital experienced by the rail industry, in sub-numbered proceedings of Dockets No. EP 552 and EP 558, respectively. *See, e.g., R.R. Revenue Adequacy—2012 Determination,* EP 552 (Sub-No. 17) (STB served Oct. 17, 2013) (summarizing Class

[4] A fourth constraint—phasing—can be used to limit the introduction of otherwise-permissible rate increases when necessary for the greater public good. *Coal Rate Guidelines,* 1 I.C.C.2d at 546–47.

[5] *Petition of the W. Coal Traffic League to Institute a Rulemaking Proceeding to Abolish the Use of the Multi-Stage Discounted Cash Flow Model in Determining the R.R. Industry's Cost of Equity Capital,* EP 664 (Sub-No. 2) (STB served Dec. 20, 2013).

By the Board, Rachel D. Campbell, Director, Office of Proceedings.

Derrick A. Gardner,

Clearance Clerk.

[FR Doc. 2014–07722 Filed 4–4–14; 8:45 am]

BILLING CODE 4915–01–P

Notices

Federal Register

Vol. 79, No. 66

Monday, April 7, 2014

This section of the FEDERAL REGISTER contains documents other than rules or proposed rules that are applicable to the public. Notices of hearings and investigations, committee meetings, agency decisions and rulings, delegations of authority, filing of petitions and applications and agency statements of organization and functions are examples of documents appearing in this section.

DEPARTMENT OF AGRICULTURE

Office of the Secretary

Notice of Request for Extension or Renewal of a Currently Approved Information Collection

AGENCY: U.S. Department of Agriculture.

ACTION: Notice; correction.

SUMMARY: In accordance with the Paperwork Reduction Act of 1995 (44 U.S.C. Chapter 35), this notice announces the intention of the Office of the Assistant Secretary for Civil Rights to request a renewal to a currently approved information collection for race, ethnicity, and gender along with comments.

DATES: Comments on this notice must be received by May 20, 2014, to be assured of consideration.

Additional Information Or Comments: Contact Anna G. Stroman, Chief, Policy Division, by mail at Office of the Assistant Secretary for Civil Rights, 1400 Independence Avenue SW., Washington, DC 20250.

SUPPLEMENTARY INFORMATION:

Title: Race, Ethnicity and Gender Data Collection.

OMB Number: OMB No. 0503–0019 Expiration.

Date of Approval: March 31, 2014.

In the **Federal Register** of March 21, 2014, in FR Doc 2014–06196 on page 15721, make the following correction:

Under Supplementary Information: Change the OMB Number From OMB No. 0505–0019 to OMB No. 0503–0019

Joe Leonard, Jr.,

Assistant Secretary for Civil Rights.

[FR Doc. 2014–07626 Filed 4–4–14; 8:45 am]

BILLING CODE P

DEPARTMENT OF AGRICULTURE

Agricultural Marketing Service

[Doc. No. AMS–FV–14–0017]

Christmas Tree Promotion, Research, and Information Order; Request for Reinstatement of a Previously Approved Information Collection for Which Approval has Expired

AGENCY: Agricultural Marketing Service, USDA.

ACTION: Notice and request for comments.

SUMMARY: In accordance with the Paperwork Reduction Act of 1995 (44 U.S.C. Chapter 35), this document announces the Agricultural Marketing Service's (AMS) intention to request reinstatement of a previously approved information collection from the Office of Management and Budget (OMB), for which approval has expired for the Christmas Tree Promotion, Research, and Information Program (Order). In addition, to the Order, we are including the burden and ballot form from a previously approved information collection that expired, titled Referendum for Christmas Tree Promotion, Research and Information Program.

DATES: Comments must be received by June 6, 2014.

ADDRESSES: Interested persons are invited to submit comments concerning this notice. Comments should be submitted online at *www.regulations.gov* or sent to the Promotion and Economics Division, Fruit and Vegetable Program, AMS, U.S. Department of Agriculture (USDA), 1400 Independence Avenue SW., Stop 0244, Room 1406–S, Washington, DC 20250–0244, or by facsimile to (202) 205–2800. All comments should reference the document number, the date and page number of this issue of the **Federal Register**. All comments received will be posted without change, including any personal information provided, online at *http://www.regulations.gov* and will be made available for public inspection at the above physical address during regular business hours.

FOR FURTHER INFORMATION CONTACT: Marlene Betts at the above address, by telephone at (202) 720–9915, or by email at *Marlene.Betts@ams.usda.gov.*

SUPPLEMENTARY INFORMATION:

Title: Christmas Tree Promotion, Research, and Information Program (Order).

OMB Number: 0581–0268.

Expiration Date of Approval: December 31, 2013.

Type of Request: Reinstatement of a previously approved collection for which approval has expired.

Abstract: The Order, which was established through the publication of a final rule on November 8, 2011 (76 FR 69094), was created to help strengthen the position of Christmas trees in the marketplace, and maintain, develop, and expand markets for Christmas trees in the United States. The Order is authorized under the Commodity Promotion, Research, and Information Act of 1996 (1996 Act) (7 U.S.C. 7411–7425). On November 17, 2011, a final rule was published that stayed indefinitely the regulations establishing the Order (76 FR 71241) to provide additional time for USDA to reach out to the Christmas tree industry and the public to explain how a research and promotion program is a producer driven program to support American farmers.

The stay is being lifted in accordance with the provisions of the Agriculture Act of 2014 (2014 Farm Bill), and the Christmas tree program will be administered by the Christmas Tree Promotion Board (Board) appointed by the Secretary of Agriculture and financed by a mandatory assessment on producers and importers of fresh cut Christmas trees. The assessment rate will be $0.15 per Christmas tree cut and sold domestically or imported into the United States. The program will provide for an exemption for producers and importers that cut and sell or import fewer than 500 Christmas trees annually. A referendum will be held among eligible producers and importers to determine whether they favor continuation of the program three years after assessments first begin.

The information collection requirements in this request are essential to carry out the intent of the Order when the stay is lifted under the authority of the 2014 Farm Bill. Section 10014 of the Farm Bill states that not later than 60 days after the date of the enactment of the 2014 Farm Bill, the Secretary of Agriculture shall lift the administrative stay that was imposed and published in the **Federal Register** on November 17, 2011.

The Order's provisions have been carefully reviewed, and every effort has been made to minimize any unnecessary recordkeeping costs or requirements, including efforts to utilize information already submitted under other Christmas tree programs administered by USDA and other State programs.

The forms covered under this collection require the minimum information necessary to effectively carry out the requirements of the program, and their use is necessary to fulfill the intent of the Order. Such information can be supplied without data processing equipment or outside technical expertise. In addition, there are no additional training requirements for individuals filling out reports and remitting assessments to the Board. The forms are simple, easy to understand, and place as small a burden as possible on the person required to file the information.

Collecting information yearly would coincide with normal industry business practices. The timing and frequency of collecting information are intended to meet the needs of the industry while minimizing the amount of work necessary to fill out the required reports. The requirement to keep records for two years beyond the fiscal period of their applicability is consistent with normal industry practices. In addition, the information to be included on these forms is not available from other sources because such information relates specifically to individual producers and importers who will be subject to the provisions of the Order. Therefore, there is no practical method for collecting the required information without the use of these forms.

AMS is committed to complying with the E-Government Act, which requires Government agencies in general to provide the public the option of submitting information or transacting business electronically to the maximum extent possible.

In addition to the information collection Christmas Tree Promotion, Research and Information Program (Order) (OMB No. 0581–0268), we are including the burden and ballot form from the previously approved information collection Referendum for Christmas Tree Promotion, Research and Information Program (OMB No. 0581–0267). Upon reinstatement of these previously approved collection for which approval has expired, we will submit a discontinuation request for the 0581–0267 to OMB.

Estimate of Burden: Public recordkeeping burden for this collection of information is estimated to average 0.398 hour per response.

Respondents: Producers and importers.

Estimated Number of Respondents: 12,455.

Estimated Total Annual Responses: 26,885.

Estimated Number of Responses per Respondent: 2.16.

Estimated Total Annual Burden on Respondents: 10,701 hours.

Comments are invited on: (1) Whether the proposed collection of information is necessary for the proper performance of the functions of the agency, including whether the information will have practical utility; (2) the accuracy of the agency's estimate of the burden of the proposed collection of information including the validity of the methodology and assumptions used; (3) ways to enhance the quality, utility, and clarity of the information to be collected; and (4) ways to minimize the burden of the collection of information on those who are to respond, including the use of appropriate automated, electronic, mechanical, or other technological collection techniques or other forms of information technology.

All responses to this document will be summarized and included in the request for OMB approval. All comments will become a matter of public record.

Authority: 44 U.S.C. Chapter 35.

Dated: April 2, 2014.

Rex A. Barnes,

Associate Administrator.

[FR Doc. 2014–07706 Filed 4–4–14; 8:45 am]

BILLING CODE 3410–02–P

DEPARTMENT OF AGRICULTURE

Agricultural Marketing Service

[Document No. AMS–ST–14–0034]

Plant Variety Protection Board; Open Teleconference Meeting

AGENCY: Agricultural Marketing Service, USDA.

ACTION: Notice of meeting.

SUMMARY: This notice is intended to notify the public of their opportunity to attend an open meeting of the Plant Variety Protection Board.

DATES: May 13, 2014 2:00 p.m. to 3:30 p.m., open to the public.

ADDRESSES: The meeting will be held at the United States Department of Agriculture, Room 2068, South Building, 1400 Independence Avenue SW., Washington, DC 20250.

FOR FURTHER INFORMATION CONTACT: Ms. Maria Pratt, Plant Variety Protection Office, Science and Technology Programs, Agricultural Marketing Service, United States Department of Agriculture, 1400 Independence Avenue SW., Washington, DC 20250. Telephone number (202) 260–8983, fax (202) 260–8976, or email: *maria.pratt@ams.usda.gov.*

SUPPLEMENTARY INFORMATION: Pursuant to the provisions of section 10(a) of the Federal Advisory Committee Act (5 U.S.C., Appendix 2), this notice is given regarding an upcoming Plant Variety Protection (PVP) Board meeting. The Plant Variety Protection Act (PVPA) (7 U.S.C. 2321 *et seq.*) provides legal protection in the form of intellectual property rights to developers of new varieties of plants, which are reproduced sexually by seed or are tuber-propagated. A Certificate of Plant Variety Protection is awarded to an owner of a crop variety after an examination shows that it is new, distinct from other varieties, genetically uniform and stable through successive generations. The term of protection is 20 years for most crops and 25 years for trees, shrubs, and vines. The PVPA also provides for a statutory Board (7 U.S.C. 2327). The duties of the Board are to: (1) Advise the Secretary concerning the adoption of rules and regulations to facilitate the proper administration of the Act; (2) provide advisory counsel to the Secretary on appeals concerning decisions on applications by the PVP Office and on requests for emergency public-interest compulsory licenses; and (3) advise the Secretary on any other matters under the Regulations and Rules of Practice and on all questions under Section 44 of the Act, ''Public Interest in Wide Usage'' (7 U.S.C. 2404).

The purpose of the meeting will be to discuss the electronic PVP (ePVP) system development, meetings with the European Union (EU) on mutual recognition of the PVP examination process, the activity of the subcommittee to evaluate molecular techniques for PVP distinctness characterization, and the PVP Office outreach efforts. The proposed agenda for the PVP Board meeting will include a welcome by Department officials followed by a discussion focusing on program activities that encourage the development of new plant varieties and appeals to the Secretary. The agenda will also include presentations on the ePVP system, summary of EU meetings, and the use of molecular markers for PVP applications, and PVP outreach activity.

The meeting will be open to the public. Those wishing to attend or phone into the meeting are encouraged to pre-register by May 5, 2014 with the

person listed under **FOR FURTHER INFORMATION CONTACT**. If you require accommodations, such as sign language interpreter, please contact the person listed under **FOR FURTHER INFORMATION CONTACT**. Minutes of the meeting will be available for public review 30 days following the meeting at the address listed under **FOR FURTHER INFORMATION CONTACT**. The minutes will also be posted on the Internet Web site *http://www.ams.usda.gov/PVPO.*

Dated: April 2, 2014.

Rex A. Barnes,

Associate Administrator, Agricultural Marketing Service.

[FR Doc. 2014–07703 Filed 4–4–14; 8:45 am]

BILLING CODE 3410–02–P

DEPARTMENT OF AGRICULTURE

Federal Crop Insurance Corporation

[Docket No. FCIC–14–0003]

Notice of Request for Renewal and Revision of the Currently Approved Information Collection

AGENCY: Federal Crop Insurance Corporation, USDA

ACTION: Renewal and Revision of the Currently Approved Information Collection.

SUMMARY: In accordance with the Paperwork Reduction Act of 1995, this notice announces a public comment period on the information collection requests (ICRs) associated with the Standard Reinsurance Agreement and Appendices I, II and IV administered by Federal Crop Insurance Corporation (FCIC). Appendix III is excluded because it contains the Data Acceptance System requirements.

DATES: Written comments on this notice will be accepted until close of business June 6, 2014.

ADDRESSES: FCIC prefers that comments be submitted electronically through the Federal eRulemaking Portal. You may submit comments, identified by Docket ID No. FCIC–14–0003, by any of the following methods:

- *Federal eRulemaking Portal: http://www.regulations.gov.* Follow the instructions for submitting comments.
- *By Mail to:* David L. Miller, Director, Reinsurance Services Division, Federal Crop Insurance Corporation, United States Department of Agriculture (USDA), 1400 Independence Avenue SW., Stop 0801, Washington, DC 20250.

All comments received, including those received by mail, will be posted without change to *http://www.regulations.gov*, including any personal information provided, and can be accessed by the public. All comments must include the agency name and docket number or Regulatory Information Number (RIN) for this rule. For detailed instructions on submitting comments and additional information, see *http://www.regulations.gov.* If you are submitting comments electronically through the Federal eRulemaking Portal and want to attach a document, we ask that it be in a text-based format. If you want to attach a document that is a scanned Adobe PDF file, it must be scanned as text and not as an image, thus allowing FCIC to search and copy certain portions of your submissions. For questions regarding attaching a document that is a scanned Adobe PDF file, please contact the RMA Web Content Team at (816) 823–4694 or by email at *rmaweb.content@rma.usda.gov.*

Privacy Act: Anyone is able to search the electronic form of all comments received for any dockets by the name of the individual submitting the comment (or signing the comment, if submitted on behalf of an association, business, labor union, etc.). You may review the complete User Notice and Privacy Notice for Regulations.gov at *http://www.regulations.gov/#!privacyNotice.*

FOR FURTHER INFORMATION CONTACT: David L. Miller, Director, Risk Management Agency, at the address listed above, telephone (202) 720–9830.

SUPPLEMENTARY INFORMATION:

Title: Standard Reinsurance Agreement; Appendices I, II and IV.

OMB Number: 0563–0069.

Type of Request: Renewal of current Information Collection.

Abstract: The Federal Crop Insurance Act (Act), Title 7 U.S.C. Chapter 36, Section 1508(k), authorizes the FCIC to provide reinsurance to insurers approved by FCIC that insure producers of any agricultural commodity under one or more plans acceptable to FCIC. The Act also states that the reinsurance shall be provided on such terms and conditions as the Board may determine to be consistent with subsections (b) and (c) of this section and sound reinsurance principles.

FCIC executes the same form of reinsurance agreement, called the Standard Reinsurance Agreement (SRA), with nineteen participating insurers approved for the 2014 reinsurance year. Appendix I of the SRA, Regulatory Duties and Responsibilities, sets forth the company's responsibilities as required by statute. Appendix II of the SRA, the Plan of Operations (Plan), sets forth the information the insurer is required to file with RMA for each reinsurance year they wish to participate. The Plan's information enables RMA to evaluate the insurer's financial and operational capability to deliver the crop insurance program in accordance with the Act. Estimated premiums by fund by state, and retained percentages along with current policyholders surplus are used in calculations to determine whether to approve the insurer's requested maximum reinsurable premium volume for the reinsurance year per 7 CFR 400 Subpart L. This information has a direct effect upon the insurer's amount of retained premium and associated liability and is required to calculate the insurer's underwriting gain or loss.

Appendix IV of the SRA, Quality Control and Program Integrity, establishes the minimum annual agent and loss adjuster training requirements, and quality control review procedures and performance standards required of the insurance companies. FCIC requires each insurer to submit, for each reinsurance year, a Quality Control Report to FCIC containing details of the results of their completed reviews. The insurance companies must also provide an annual Training and Performance Evaluation Report which details the evaluation of each agent and loss adjuster and reports of any remedial actions taken by the Company to correct any error or omission or ensure compliance with the SRA. The submission of these reports is included in Appendix II.

FCIC is requesting the Office of Management and Budget (OMB) to extend the approval of this information collection for an additional 3 years.

The purpose of this notice is to solicit comments from the public concerning the continuation of the current information collection activity as associated with the SRA in effect for the 2014 and subsequent reinsurance years. These comments will help us:

(1) Evaluate whether the current collection of information is necessary for the proper performance of the functions of the agency, including whether the information has practical utility;

(2) Evaluate the accuracy of the agency's estimate of the burden of the current collection of information;

(3) Enhance the quality, utility, and clarity of the information being collected; and

(4) Minimize the burden of the collection of information on those who are to respond, through use, as appropriate, of automated, electronic, mechanical, and other collection technologies, e.g., permitting electronic submission of responses.

Appendix I of the SRA includes Conflict of Interest data collection, which in addition to the insurance companies reinsured by FCIC, encompasses the insurance companies' employees and their contracted agents and loss adjusters. Appendix I also includes a Controlled Business data collection from all employed or contracted agents. The estimate below shows the burden that will be placed upon the following affected entities.

Estimate of Burden: The public reporting burden for the collection of Appendix II information is estimated to average 173 hours per response.

Respondents/Affected Entities: Insurance companies reinsured by FCIC.

Estimated annual number of respondents: 19.

Estimated annual number of responses per respondent: 1.

Estimated annual number of responses: 19.

Estimated total annual burden on respondents (hours): 3,287.

Estimate of Burden: The public reporting burden for the Appendix I collection of Conflict of Interest information is estimated to average 1 hour per response.

Respondents/Affected Entities: Approved Insurance Provider's employees and their contracted agents and loss adjusters.

Estimated annual number of respondents: 20,000.

Estimated annual number of responses per respondent: 1.

Estimated annual number of responses: 20,000.

Estimated total annual burden on respondents (hours): 20,000.

Estimate of Burden: The public reporting burden for the Appendix I collection of Controlled Business information is estimated to average 1 hour per response.

Respondents/Affected Entities: Approved Insurance Provider's employed and contracted agents.

Estimated annual number of respondents: 12,500.

Estimated annual number of responses per respondent: 1.

Estimated annual number of responses: 12,500.

Estimated total annual burden on respondents (hours): 12,500.

All responses to this notice will be summarized and included in the request for OMB approval. All comments will also become a matter of public record.

Signed in Washington, DC, on March 28, 2014.

Brandon Willis,

Manager, Federal Crop Insurance Corporation.

[FR Doc. 2014–07616 Filed 4–4–14; 8:45 am]

BILLING CODE 3410–08–P

DEPARTMENT OF AGRICULTURE

Federal Crop Insurance Corporation

[Docket No. FCIC–14–0002]

Notice of Request for Renewal and Revision of the Currently Approved Information Collection

AGENCY: Federal Crop Insurance Corporation, USDA.

ACTION: Renewal and Revision of the Currently Approved Information Collection.

SUMMARY: In accordance with the Paperwork Reduction Act of 1995 (44 U.S.C. Chapter 35) this notice announces the Risk Management Agency's intention to request an extension to a currently approved information collection for the submission of policies, provisions of policies and rates of premium under section 508(h) of the Federal Crop Insurance Act. This notice announces a public comment period on the information collection requests (ICRs) associated with the submission of policies, provisions of policies and rates of premium under section 508(h) of the Federal Crop Insurance Act.

DATES: Written comments on this notice will be accepted until close of business June 6, 2014.

ADDRESSES: FCIC prefers that comments be submitted electronically through the Federal eRulemaking Portal. You may submit comments, identified by Docket ID No. FCIC–14–0002, by any of the following methods:

- Federal eRulemaking Portal: *http://www.regulations.gov.* Follow the instructions for submitting comments.
- Mail: Director, Product Administration and Standards Division, Risk Management Agency, United States Department of Agriculture, P.O. Box 419205, Kansas City, MO 64133–6205.

All comments received, including those received by mail, will be posted without change to *http://www.regulations.gov*, including any personal information provided, and can be accessed by the public. All comments must include the agency name and docket number or Regulatory Information Number (RIN) for this rule. For detailed instructions on submitting comments and additional information, see *http://www.regulations.gov.* If you are submitting comments electronically through the Federal eRulemaking Portal and want to attach a document, we ask that it be in a text-based format. If you want to attach a document that is a scanned Adobe PDF file, it must be scanned as text and not as an image, thus allowing FCIC to search and copy certain portions of your submissions. For questions regarding attaching a document that is a scanned Adobe PDF file, please contact the RMA Web Content Team at (816)823–4694 or by email at *rmaweb.content@rma.usda.gov.*

Privacy Act: Anyone is able to search the electronic form of all comments received for any dockets by the name of the individual submitting the comment (or signing the comment, if submitted on behalf of an association, business, labor union, etc.). You may review the complete User Notice and Privacy Notice for Regulations.gov at *http://www.regulations.gov/#!privacyNotice.*

FOR FURTHER INFORMATION CONTACT: Tim Hoffmann, Director, Product Administration and Standards Division, Risk Management Agency, United States Department of Agriculture, Beacon Facility, Stop 0812, Room 421, P.O. Box 419205, Kansas City, MO 64141–6205, telephone (816) 926– 7730.

SUPPLEMENTARY INFORMATION:

Title: General Administrative Regulations; Subpart V—Submission of Policies, Provisions of Policies, Rates of Premium, and Non-Reinsured Supplemental Policies.

OMB Number: 0563–0064.

Expiration Date of Approval: September 30, 2014.

Type of Request: Extension of a currently approved information collection.

Abstract: FCIC is proposing to renew the currently approved information collection, OMB Number 0563–0064. It is currently up for renewal and extension for three years. Subpart V establishes guidelines for the submission of policies or other materials to the Federal Crop Insurance Board of Directors (Board) and identifies the required contents of a submission: the timing, review, and confidentiality requirements; reimbursement of research and development costs, maintenance costs, and user fees; and guidelines for nonreinsured supplemental policies. This data is used to administer the Federal crop insurance program in accordance with the Federal Crop Insurance Act, as amended.

The submission's per-response time was adjusted because RMA removed the requirement that submitters must do a separate actuarial and legal review of

the submission, the tasks are part of the review process of the Federal Crop Insurance Corporation (FCIC) Board of Directors (Board). The FCIC Board contracts with at least two individuals to conduct an actuarial review of the submission and requests the Office of General Council review the submission for legal sufficiency. RMA removed two respondents per submission (actuary and lawyer); therefore, lowering the amount of time spent on submissions. The Agricultural Act of 2014 requires FCIC provide instructions for index-based weather insurance products. FCIC expects there will be 2 submissions and the per-response time for the submissions is included in this package.

FCIC is requesting the Office of Management and Budget (OMB) to extend the approval of this information collection for an additional 3 years.

The purpose of this notice is to solicit comments from the public concerning this information collection. These comments will help us:

(1) Evaluate whether the proposed collection of information is necessary for the proper performance of the functions of the agency, including whether the information has practical utility;

(2) Evaluate the accuracy of the agency's estimate of the burden of the proposed collection of information;

(3) Enhance the quality, utility, and clarity of the information to be collected; and

(4) Minimize the burden of the collection of information on those who are to respond, through use, as appropriate, of automated, electronic, mechanical, and other collection technologies, e.g., permitting electronic submission of responses.

Estimate of burden: The public reporting burden for this collection of information is estimated to average 461 hours per response.

Respondents/Affected Entities: Parties affected by the information collection requirements included in this Notice is a person (including an approved insurance provider, a college or university, a cooperative or trade association, or any other person) who prepares a submission, or proposes to the Board other crop insurance policies, provisions of policies, or rates of premium.

Estimated annual number of respondents: 396.

Estimated annual number of responses per respondent: .62.

Estimated annual number of responses: 246.

Estimated total annual burden hours on respondents: 113,289.

All responses to this notice will be summarized and included in the request for OMB approval. All comments will also become a matter of public record.

Signed in Washington, DC, on March 28, 2014.

Brandon Willis,

Manager, Federal Crop Insurance Corporation.

[FR Doc. 2014–07615 Filed 4–4–14; 8:45 am]

BILLING CODE 3410–08–P

DEPARTMENT OF AGRICULTURE

Rural Housing Service

Section 538 Guaranteed Rural Rental Housing Program 2014 Industry Forums—Open Teleconference and/or Web Conference Meetings

AGENCY: Rural Housing Service, USDA.

ACTION: Notice.

SUMMARY: This notice announces a series of teleconference and/or web conference meetings regarding the U.S. Department of Agriculture (USDA) Section 538 Guaranteed Rural Rental Housing Program, which are scheduled to occur during the months of March, July, and November of 2014. This notice also outlines suggested discussion topics for the meetings and is intended to notify the general public of their opportunity to participate in the teleconference and/or web conference meetings.

DATES: The dates and times for the teleconference and/or web conference meetings will be announced via email to parties registered as described below.

FOR FURTHER INFORMATION CONTACT: Any member of the public wishing to register for the calls and obtain the call-in number, access code, web link and other information for any of the public teleconferences and/or web conferences may contact Monica Cole, Financial and Loan Analyst, Multi-Family Housing Guaranteed Loan Division, Rural Development, U.S. Department of Agriculture, telephone: (202) 720–1251, fax: (202) 205–5066, or email: *monica.cole@wdc.usda.gov.* Those who request registration less than 15 calendar days prior to the date of a teleconference and/or web conference meetings may not receive notice of that teleconference and/or web conference meeting, but will receive notice of future teleconference and/or web conference meetings. The Agency expects to accommodate each participant's preferred form of participation by telephone or via web link. However, if it appears that existing capabilities may prevent the Agency from accommodating all requests for one form of participation, each participant will be notified and encouraged to consider an alternative form of participation. Individuals who plan to participate and need language translation assistance should inform Monica Cole within 10 business days in advance of the meeting date.

SUPPLEMENTARY INFORMATION: The objectives of this series of teleconferences are as follows:

- Enhance the effectiveness of the Section 538 Guaranteed Rural Rental Housing Program.
- Update industry participants and Rural Housing Service (RHS) staff on developments involving the Section 538 program.
- Enhance RHS' awareness of the market and other forces that impact the Section 538 Guaranteed Rural Rental Housing Program.

Topics to be discussed could include, but will not be limited to, the following:

- Updates on USDA's Section 538 Guaranteed Rural Rental Housing Program activities.
- Perspectives on the current state of debt financing and its impact on the Section 538 program.
- Enhancing the use of Section 538 financing with the transfer and/or preservation of Section 515 developments.
- The impact of Low Income Housing Tax Credits program changes on Section 538 financing.

USDA prohibits discrimination against its customers, employees, and applicants for employment on the bases of race, color, national origin, age, disability, sex, gender identity, religion, reprisal and where applicable, political beliefs, marital status, familial or parental status, sexual orientation, or all or part of an individual's income is derived from any public assistance program or protected genetic information in employment or any program activity conducted or funded by the Department. (Not all prohibited bases apply to all programs and/or employment activities.)

Individuals who are deaf, hard of hearing or have speech disabilities and you wish to file either an EEO or program complaint, please contact USDA through the Federal Relay Service at (800) 877–8339 or (800) 845–6136 (in Spanish). Persons with disabilities, who wish to file a program complaint, please see information below on how to contact us by mail directly or by email. Persons with disabilities who require alternative means of communication for program information (e.g., Braille, large print, audiotape, etc.)

should contact USDA's TARGET Center at (202) 720–2600 (voice and TDD). If you wish to file a Civil Rights program complaint of discrimination, complete the USDA Program Complaint Form, found online at *http://www.ascr.usda.gov/complaint_filing_cust.html,* or at any USDA office, or call (866) 632–9992 to request a form. You may also write a letter containing all of the information requested on the form. Send your completed complaint form or letter to us by mail at to USDA, Director, Office of Adjudication, 1400 Independence Avenue SW., Washington, DC 20250–9410, by fax (202) 690–7442 or email at *program.intake@usda.gov.* ''USDA is an equal opportunity provider, employer, and lender.''

Dated: March 25, 2014.

Tony Hernandez,

Administrator, Rural Housing Service.

[FR Doc. 2014–07654 Filed 4–4–14; 8:45 am]

BILLING CODE 3410–XV–P

BROADCASTING BOARD OF GOVERNORS

Sunshine Act Meeting Notice

DATE AND TIME: Friday, April 11, 2014, 8:30 a.m.–12:30 p.m. EDT.

PLACE: Cohen Building, Room 3321, 330 Independence Ave. SW., Washington, DC 20237.

SUBJECT: Notice of Meeting of the Broadcasting Board of Governors.

SUMMARY: The Broadcasting Board of Governors (Board) will be meeting at the time and location listed above. The Board will vote on a consent agenda consisting of the minutes of its February 25, 2014 meeting, a resolution for David Burke Distinguished Journalism Awards, a resolution for a Code of Conduct for the Board, an updated policy regarding non-disclosure of deliberative information, and a policy statement on the prohibition of harassment. The Board will discuss and vote on the recommendations of the Board's Special Committee on Internet Anti-Censorship. Finally, the Board will receive a presentation providing an overview of Radio Free Asia and convene a discussion panel on Internet Anti-Censorship efforts.

This meeting will also be available for public observation via streamed webcast, both live and on-demand, on the agency's public Web site at *www.bbg.gov.* Information regarding this meeting, including any updates or adjustments to its starting time, can also be found on the agency's public Web site.

The public may also attend this meeting in person at the address listed above as seating capacity permits. Member of the public seeking to attend the meeting in person must register at *https://bbgboardmeetingapril2014.eventbrite.com* by 12 p.m. (EDT) on April 10. For more information, please contact BBG Public Affairs at (202) 203–4400 or by email at *pubaff@bbg.gov.*

CONTACT PERSON FOR MORE INFORMATION: Persons interested in obtaining more information should contact Oanh Tran at (202) 203–4545.

Oanh Tran,

Director of Board Operations.

[FR Doc. 2014–07798 Filed 4–3–14; 11:15 am]

BILLING CODE 8610–01–P

COMMISSION ON CIVIL RIGHTS

Agenda and Notice of Public Meeting of the Tennessee Advisory Committee

Notice is hereby given, pursuant to the provisions of the rules and regulations of the U.S. Commission on Civil Rights (Commission) and the Federal Advisory Committee Act (FACA) that a meeting of the Tennessee Advisory Committee (Committee) to the Commission will convene at 1:30 p.m. and adjourn at approximately 3:00 p.m. on Monday, April 21, 2014. The meeting will be held at the Main Nashville Public Library, 615 Church Street, Nashville, TN. The purpose of the meeting is for the Committee to discuss its voting rights report and plan future activities.

Members of the public are entitled to submit written comments. Comments must be received in the regional office by May 21, 2014. Comments may be mailed to Peter Minarik at the Southern Regional Office, U.S. Commission on Civil Rights, 61 Forsyth St. SW., Suite 16T126, Atlanta, GA 30303. They may also be faxed to the Committee at (404) 562–7005 or emailed to *pminarik@usccr.gov.* Persons who desire additional information may contact the Southern Regional Office at (404) 562–7000.

Hearing-impaired persons who will attend the meeting and require the services of a sign language interpreter should contact the Southern Regional Office at least ten (10) working days before the scheduled date of the meeting.

Records generated from this meeting may be inspected and reproduced at the Southern Regional Office, as they become available, both before and after the meeting. Persons interested in the work of this advisory committee are advised to go to the Commission's Web site, *www.usccr.gov,* or to contact the Southern Regional Office at the above email or street address.

The meeting will be conducted pursuant to the provisions of the rules and regulations of the Commission and FACA.

Dated in Chicago, IL, on April 1, 2014.

David Mussatt,

Acting Chief, Regional Programs Coordination Unit.

[FR Doc. 2014–07599 Filed 4–4–14; 8:45 am]

BILLING CODE 6335–01–P

COMMISSION ON CIVIL RIGHTS

Agenda and Notice of Public Meeting of the South Carolina Advisory Committee

Notice is hereby given, pursuant to the provisions of the rules and regulations of the U.S. Commission on Civil Rights (Commission) and the Federal Advisory Committee Act (FACA) that a meeting of the South Carolina Advisory Committee (Committee) to the Commission will convene at 10:00 a.m. and adjourn at approximately 11:30 a.m. on Wednesday, April 23, 2014. The meeting will be held at the Richland County Public Library, 1431 Assembly Street, Columbia, South Carolina 29201. The purpose of the meeting is for the Committee to plan its voting rights project.

Members of the public are entitled to submit written comments. Comments must be received in the regional office by May 23, 2014. Comments may be mailed to Peter Minarik at the Southern Regional Office, U.S. Commission on Civil Rights, 61 Forsyth St., SW., Suite 16T126, Atlanta, GA, 30303. They may also be faxed to the Committee at (404) 562–7005 or emailed to *pminarik@usccr.gov.* Persons who desire additional information may contact the Southern Regional Office at (404) 562–7000.

Hearing-impaired persons who will attend the meeting and require the services of a sign language interpreter should contact the Southern Regional Office at least ten (10) working days before the scheduled date of the meeting.

Records generated from this meeting may be inspected and reproduced at the Southern Regional Office, as they become available, both before and after the meeting. Persons interested in the work of this advisory committee are advised to go to the Commission's Web site, *www.usccr.gov*, or to contact the

Southern Regional Office at the above email or street address.

The meeting will be conducted pursuant to the provisions of the rules and regulations of the Commission and FACA.

Dated April 1, 2014.

David Mussatt,

Acting Chief, Regional Programs Coordination Unit.

[FR Doc. 2014–07598 Filed 4–4–14; 8:45 am]

BILLING CODE 6335–01–P

DEPARTMENT OF COMMERCE

Foreign-Trade Zones Board

[S–33–2014]

Foreign-Trade Zone 7—Mayagüez, PR; Application for Subzone; Neolpharma, Inc.; Caguas, PR

An application has been submitted to the Foreign-Trade Zones Board (the Board) by the Puerto Rico Industrial Development Company, grantee of FTZ 7, requesting subzone status for the facility of Neolpharma, Inc., located in Caguas, Puerto Rico. The application was submitted pursuant to the provisions of the Foreign-Trade Zones Act, as amended (19 U.S.C. 81a-81u), and the regulations of the Board (15 CFR part 400). It was formally docketed on April 1, 2014.

The proposed subzone (29.48 acres) is located at #99 Jardines Street in Caguas. No authorization for production activity has been requested at this time. The proposed subzone would be subject to the existing activation limit of FTZ 7.

In accordance with the Board's regulations, Camille Evans of the FTZ Staff is designated examiner to review the application and make recommendations to the Executive Secretary.

Public comment is invited from interested parties. Submissions shall be addressed to the Board's Executive Secretary at the address below. The closing period for their receipt is May 19, 2014 Rebuttal comments in response to material submitted during the foregoing period may be submitted during the subsequent 15-day period to June 2, 2014.

A copy of the application will be available for public inspection at the Office of the Executive Secretary, Foreign-Trade Zones Board, Room 21013, U.S. Department of Commerce, 1401 Constitution Avenue NW., Washington, DC 20230–0002, and in the ''Reading Room'' section of the Board's Web site, which is accessible via *www.trade.gov/ftz.* For further information, contact Camille Evans at *Camille.Evans@trade.gov* or (202) 482–2350.

Dated: April 1, 2014.

Andrew McGilvray,

Executive Secretary.

[FR Doc. 2014–07717 Filed 4–4–14; 8:45 am]

BILLING CODE 3510–DS–P

DEPARTMENT OF COMMERCE

Bureau of Industry and Security

Sensors and Instrumentation Technical Advisory Committee; Notice of Partially Closed Meeting

The Sensors and Instrumentation Technical Advisory Committee (SITAC) will meet on April 22, 2014, 9:30 a.m., in the Herbert C. Hoover Building, Room 3884, 14th Street between Constitution and Pennsylvania Avenues NW., Washington, DC. The Committee advises the Office of the Assistant Secretary for Export Administration on technical questions that affect the level of export controls applicable to sensors and instrumentation equipment and technology.

Agenda

Public Session

1. Welcome and Introductions.
2. Remarks from the Bureau of Industry and Security Management.
3. Industry Presentations.
4. New Business.

Closed Session

5. Discussion of matters determined to be exempt from the provisions relating to public meetings found in §§ 5 U.S.C. app. 2 §§ 10(a)(1) and 10(a)(3).

The open session will be accessible via teleconference to 20 participants on a first come, first serve basis. To join the conference, submit inquiries to Ms. Yvette Springer at *Yvette.Springer@bis.doc.gov* no later than April 15, 2014.

A limited number of seats will be available during the public session of the meeting. Reservations are not accepted. To the extent that time permits, members of the public may present oral statements to the Committee. The public may submit written statements at any time before or after the meeting. However, to facilitate distribution of public presentation materials to the Committee members, the Committee suggests that the materials be forwarded before the meeting to Ms. Springer.

The Assistant Secretary for Administration, with the concurrence of the General Counsel, formally determined on September 23, 2013 pursuant to Section 10(d) of the Federal Advisory Committee Act, as amended (5 U.S.C. app. 2 § 10(d), that the portion of this meeting dealing with pre-decisional changes to the Commerce Control List and U.S. export control policies shall be exempt from the provisions relating to public meetings found in 5 U.S.C. app. 2 §§ 10(a)(1) and 10(a)(3). The remaining portions of the meeting will be open to the public.

For more information contact Yvette Springer on (202) 482–2813.

Dated: March 31, 2014.

Yvette Springer,

Committee Liaison Officer.

[FR Doc. 2014–07648 Filed 4–4–14; 8:45 am]

BILLING CODE P

DEPARTMENT OF COMMERCE

Bureau of Industry and Security

Information Systems Technical Advisory Committee; Notice of Partially Closed Meeting

The Information Systems Technical Advisory Committee (ISTAC) will meet on April 23 and 24, 2014, 9:00 a.m., in the Herbert C. Hoover Building, Room 3884, 14th Street between Constitution and Pennsylvania Avenues NW., Washington, DC. The Committee advises the Office of the Assistant Secretary for Export Administration on technical questions that affect the level of export controls applicable to information systems equipment and technology.

Wednesday, April 23

Open Session

1. Welcome and Introductions.
2. Working Group Reports.
3. Industry Presentations.
4. New business.

Thursday, April 24

Closed Session

5. Discussion of matters determined to be exempt from the provisions relating to public meetings found in 5 U.S.C. app. 2 §§ 10(a)(1) and 10(a)(3).

The open session will be accessible via teleconference to 20 participants on a first come, first serve basis. To join the conference, submit inquiries to Ms. Yvette Springer at *Yvette.Springer@bis.doc.gov,* no later than April 15, 2014.

A limited number of seats will be available for the public session. Reservations are not accepted. To the extent time permits, members of the public may present oral statements to the Committee. The public may submit written statements at any time before or

after the meeting. However, to facilitate distribution of public presentation materials to Committee members, the Committee suggests that public presentation materials or comments be forwarded before the meeting to Ms. Springer.

The Assistant Secretary for Administration, with the concurrence of the delegate of the General Counsel, formally determined on December 5, 2013, pursuant to Section 10(d) of the Federal Advisory Committee Act, as amended (5 U.S.C. app. 2 § (l0)(d))), that the portion of the meeting concerning trade secrets and commercial or financial information deemed privileged or confidential as described in 5 U.S.C. 552b(c)(4) and the portion of the meeting concerning matters the disclosure of which would be likely to frustrate significantly implementation of an agency action as described in 5 U.S.C. 552b(c)(9)(B) shall be exempt from the provisions relating to public meetings found in 5 U.S.C. app. 2 §§ 10(a)(1) and l0(a)(3). The remaining portions of the meeting will be open to the public.

For more information, call Yvette Springer at (202)482–2813.

Dated: March 31, 2014.

Yvette Springer,

Committee Liaison Officer.

[FR Doc. 2014–07651 Filed 4–4–14; 8:45 am]

BILLING CODE 3510–JT–P

DEPARTMENT OF COMMERCE

Bureau of Industry and Security

Transportation and Related Equipment Technical Advisory Committee; Notice of Partially Closed Meeting

The Transportation and Related Equipment Technical Advisory Committee will meet on May 7, 2014, 9:30 a.m., in the Herbert C. Hoover Building, Room 3884, 14th Street between Constitution & Pennsylvania Avenues NW., Washington, DC. The Committee advises the Office of the Assistant Secretary for Export Administration with respect to technical questions that affect the level of export controls applicable to transportation and related equipment or technology.

Agenda

Public Session

1. Welcome and Introductions.

2. Status reports by working group chairs.

3. Public comments and Proposals.

Closed Session

4. Discussion of matters determined to be exempt from the provisions relating to public meetings found in 5 U.S.C. app. 2 §§ 10(a)(1) and 10(a)(3).

The open session will be accessible via teleconference to 20 participants on a first come, first serve basis. To join the conference, submit inquiries to Ms. Yvette Springer at *Yvette.Springer@bis.doc.gov* no later than April 30, 2014.

A limited number of seats will be available during the public session of the meeting. Reservations are not accepted. To the extent time permits, members of the public may present oral statements to the Committee. The public may submit written statements at any time before or after the meeting. However, to facilitate distribution of public presentation materials to Committee members, the Committee suggests that presenters forward the public presentation materials prior to the meeting to Ms. Springer via email.

The Assistant Secretary for Administration, with the concurrence of the delegate of the General Counsel, formally determined on December 30, 2013, pursuant to Section 10(d) of the Federal Advisory Committee Act, as amended (5 U.S.C. app. 2 § (10)(d)), that the portion of the meeting dealing with pre-decisional changes to the Commerce Control List and U.S. export control policies shall be exempt from the provisions relating to public meetings found in 5 U.S.C. app. 2 §§ 10(a)(1) and 10(a)(3). The remaining portions of the meeting will be open to the public.

For more information, call Yvette Springer at (202) 482–2813.

Dated: March 31, 2014.

Yvette Springer,

Committee Liaison Officer.

[FR Doc. 2014–07652 Filed 4–4–14; 8:45 am]

BILLING CODE P

DEPARTMENT OF COMMERCE

International Trade Administration

[A–570–935]

Circular Welded Carbon-Quality Steel Line Pipe From the People's Republic of China: Final Results of the Expedited First Sunset Review of the Antidumping Duty Order

AGENCY: Enforcement and Compliance, formerly Import Administration, International Trade Administration, Department of Commerce

SUMMARY: As a result of this sunset review, the Department of Commerce (''the Department'') finds that revocation of the antidumping duty (''AD'') order on circular welded carbon-quality steel line pipe (''welded line pipe'') from the People's Republic of China (''PRC'') would be likely to lead to continuation or recurrence of dumping. The magnitude of the dumping margins likely to prevail is indicated in the ''Final Results of Sunset Review'' section of this notice.

DATES: Effective Date: April 7, 2014.

FOR FURTHER INFORMATION CONTACT: Lori Apodaca or Howard Smith, AD/CVD Operations, Office IV, Enforcement and Compliance, International Trade Administration, U.S. Department of Commerce, 14th Street and Constitution Avenue NW., Washington, DC 20230; telephone: (202) 482–4551 or (202) 482–5193, respectively.

SUPPLEMENTARY INFORMATION:

Background

On May 13, 2009, the Department published the AD order on welded line pipe from the PRC.[1] On December 2, 2013, the Department published the notice of initiation of the sunset review of this AD order, pursuant to section 751(c) of the Act.[2] On December 11 and 17, 2013, pursuant to 19 CFR 351.218(d)(1), the Department received timely and complete notices of intent to participate in the sunset review of the order from American Cast Iron Pipe Company (''ACIPCO''), JMC Steel Group (''JMC''), Maverick Tube Corporation (''Maverick''), Stupp Corporation (''Stupp''), Tex-Tube Company (''Tex-Tube''), TMK IPSCO, United States Steel Corporation (''U.S. Steel''), and Welspun Tubular LLC USA (''Welspun'') (collectively ''Domestic Producers''). On January 2, 2014, pursuant to 19 CFR 351.218(d)(3), Domestic Producers filed a timely and adequate substantive response. The Department did not receive substantive responses from any respondent interested party. As a result, pursuant to section 751(c)(3)(B) of the Act and 19 CFR 351.218(e)(1)(ii)(C)(2), the Department conducted an expedited (120-day) sunset review of this AD order.

Scope of the Order

The merchandise covered by this order is circular welded carbon quality steel pipe of a kind used for oil and gas pipelines (welded line pipe), not more than 406.4 mm (16 inches) in outside diameter, regardless of wall thickness,

[1] *See Certain Circular Welded Carbon Quality Steel Line Pipe from the People's Republic of China: Antidumping Duty Order,* 74 FR 22515 (May 13, 2009) (''*Antidumping Duty Order*'').

[2] *See Initiation of Five-Year (''Sunset'') Review,* 78 FR 72061 (December 2, 2013) (''*Sunset Initiation*'').

length, surface finish, end finish or stenciling.

The welded line pipe products that are the subject of this order are currently classifiable in the Harmonized Tariff Schedule of the United States (''HTSUS'') under subheadings 7306.19.10.10, 7306.19.10.50, 7306.19.51.10, and 7306.19.51.50. While HTSUS subheadings are provided for convenience and customs purposes, the written description of the scope of this order is dispositive.

Analysis of Comments Received

A complete discussion of all issues raised in this sunset review is provided in the accompanying I&D Memorandum, which is hereby adopted by this notice.[3] The issues discussed in the I&D Memorandum include the likelihood of continuation or recurrence of dumping and the magnitude of the dumping margins likely to prevail if the order is revoked. The I&D Memorandum is a public document and is on file electronically via Enforcement and Compliance's Antidumping and Countervailing Duty Centralized Electronic Service System (''IA ACCESS''). Access to IA ACCESS is available in the Central Records Unit, room 7046 of the main Department of Commerce building. In addition, a complete version of the I&D Memorandum can be accessed at *http://enforcement.trade.gov/frn/.* The signed I&D Memorandum and the electronic version of the I&D Memorandum are identical in content.

Final Results of Sunset Reviews

The Department determines that revocation of the AD order on welded line pipe from the PRC would be likely to lead to continuation or recurrence of dumping, with the following dumping margins likely to prevail:

Exporter/producer	Weighted-average percentage margin
Huludao Steel Pipe Industrial Co., Ltd./Huludao City Steel Pipe Industrial Co., Ltd	73.87
Produced by: Huludao Steel Pipe Industrial Co., Ltd./Huludao City Steel Pipe Industrial Co., Ltd.	
Pangang Group Beihai Steel Pipe Corporation	73.87
Produced by: Pangang Group Beihai Steel Pipe Corporation	
Jiangsu Yulong Steel Pipe Co., Ltd	73.87
Produced by: Jiangsu Yulong Steel Pipe Co., Ltd.	
Tianjin Xingyuda Import and Export Co., Ltd	73.87
Produced by: Tianjin Lifengyuanda Steel Pipe Group Co., Ltd.	
PRC-Wide Rate	101.10

Notification Regarding Administrative Protective Orders

This notice also serves as the only reminder to parties subject to administrative protective orders (''APO'') of their responsibility concerning the return or destruction of proprietary information disclosed under APO in accordance with 19 CFR 351.305. Timely notification of the return or destruction of APO materials or conversion to judicial protective orders is hereby requested. Failure to comply with the regulations and terms of an APO is a violation which is subject to sanction.

We are issuing and publishing these results and notice in accordance with sections 751(c), 752(c), and 777(i)(1) of the Act and 19 CFR 351.218.

Dated: March 28, 2014.

Paul Piquado,

Assistant Secretary for Enforcement and Compliance.

[FR Doc. 2014–07595 Filed 4–4–14; 8:45 am]

BILLING CODE 3510–DS–P

[3] *See* ''Issues and Decision Memorandum for the Expedited First Sunset Review of the Antidumping Duty Order on Circular Welded Carbon-Quality Steel Line Pipe from the People's Republic of China,'' from Christian Marsh, Deputy Assistant Secretary for Antidumping and Countervailing Duty Operations, to Paul Piquado, Assistant Secretary for Enforcement and Compliance, dated concurrently with this notice (''I&D Memorandum'').

DEPARTMENT OF COMMERCE

International Trade Administration

[A–552–801]

Certain Frozen Fish Fillets From the Socialist Republic of Vietnam: Final Results of Antidumping Duty Administrative Review and New Shipper Review; 2011–2012

AGENCY: Enforcement and Compliance, formerly Import Administration, International Trade Administration, Department of Commerce.

SUMMARY: The Department of Commerce (the ''Department'') published the *Preliminary Results* of the ninth administrative review, and aligned new shipper review, on certain frozen fish fillets from the Socialist Republic of Vietnam (''Vietnam'') on September 11, 2013.[1] We gave interested parties an opportunity to comment on the *Preliminary Results.* Based upon our analysis of the comments and information received, we made changes to the margin calculations for these final results. The final dumping margins are listed below in the ''Final Results of the Administrative Reviews'' section of this notice. The period of review (''POR'') is August 1, 2011, through July 31, 2012.

DATES: *Effective Date:* April 7, 2014.

FOR FURTHER INFORMATION CONTACT: Alex Montoro (Golden Quality), Paul Walker (HVG) or Julia Hancock (Vinh Hoan), AD/CVD Operations, Office V, Enforcement and Compliance, International Trade Administration, U.S. Department of Commerce, 14th Street and Constitution Avenue NW., Washington, DC 20230; telephone 202–482–0238, 202–482–0413 or 202–482–1394, respectively.

SUPPLEMENTARY INFORMATION:

Background

The Department published the *Preliminary Results* on September 11, 2013.[2] On January 7, 2014, the Department extended the final results to March 8, 2014.[3] Between January 22 and February 10, 2014, interested parties submitted case and rebuttal briefs. On February 25, 2014, the Department extended the final results to March 28,

[1] *See Certain Frozen Fish Fillets from the Socialist Republic of Vietnam: Preliminary Results of the Antidumping Duty Administrative Review and New Shipper Review; 2011–2012,* 78 FR 55676 (September 11, 2013) (''*Preliminary Results*'') and accompanying Decision Memorandum.

[2] *Id.*

[3] *See* Memorandum to Gary Taverman, Senior Advisor, through James Doyle, Office Director, from Julia Hancock, Senior International Trade Compliance Analyst, ''Certain Frozen Fish Fillets from the Socialist Republic of Vietnam: Extension of Deadline for Final Results of Administrative Review, and Aligned New Shipper Review,'' dated January 7, 2014.

2014.[4] On March 6, 2014, the Department held a hearing.

Scope of the Order

The product covered by the order is frozen fish fillets, including regular, shank, and strip fillets and portions thereof, whether or not breaded or marinated, of the species *Pangasius Bocourti, Pangasius Hypophthalmus* (also known as *Pangasius Pangasius*) and *Pangasius Micronemus.* These products are classifiable under tariff article codes 0304.29.6033, 0304.62.0020, 0305.59.0000, 0305.59.4000, 1604.19.2000, 1604.19.2100, 1604.19.3000, 1604.19.3100, 1604.19.4000, 1604.19.4100, 1604.19.5000, 1604.19.5100, 1604.19.6100 and 1604.19.8100 (Frozen Fish Fillets of the species *Pangasius* including basa and tra) of the Harmonized Tariff Schedule of the United States (''HTSUS'').[5] Although the HTSUS subheadings are provided for convenience and customs purposes, our written description of the scope of the order, which is contained in the accompanying Issues and Decision Memorandum (''I&D Memo'') is dispositive.[6]

Analysis of Comments Received

All issues raised in the case and rebuttal briefs by parties in these reviews are addressed in the I&D Memo. A list of the issues which parties raised is attached to this notice as an appendix. The I&D Memo is a public document and is on file in the Central Records Unit (''CRU''), Room 7046 of the main Department of Commerce building, as well as electronically via Enforcement and Compliance's Antidumping and Countervailing Duty Centralized Electronic Service System (''IA ACCESS''). IA ACCESS is available to registered users at *http://iaaccess.trade.gov* and in the CRU. In addition, a complete version of the I&D Memo can be accessed directly on the internet at *http://enforcement.trade.gov/frn/index.html.* The signed I&D Memo and the electronic versions of the I&D Memo are identical in content.

Final Determination of No Shipments

In the *Preliminary Results,* the Department preliminarily found that An Giang Agriculture and Food Import-Export Joint Stock Company (''Afiex''), An Phu Seafood Corporation (''An Phu''), Bien Dong Seafood Co., Ltd. (''Bien Dong''), Dai Thanh Seafoods Company Limited (''Dai Thanh''), Fatifish Company Limited (''Fatifish''), Hoang Long Seafood Processing Co., Ltd. (''Hoang Long''), Nam Viet Corporation (''Navico'') and Thuan An Production Trading & Services Co., Ltd. (''Thuan An'') did not have any reviewable transactions. Consistent with the Department's refinement to its assessment practice in non-market economy (''NME'') cases, we completed the review with respect to the above named companies.[7]

Subsequent to the *Preliminary Results,* the Department received comments regarding GODACO Seafood Joint Stock Company (''GODACO'') and Quang Minh Seafood Co., Ltd. (''Quang Minh''). Based on the certifications submitted by GODACO and Quang Minh, our analysis of the CBP information, and consistent with Comment XXIII of the I&D Memo, we determine that GODACO and Quang Minh did not have any reviewable transactions during the POR. As noted in the ''Assessment Rates'' section below, the Department will issue appropriate instructions to CBP for the above-named companies based on the final results of the review.

Changes Since the Preliminary Results

Based on a review of the record and comments received from interested parties regarding our *Preliminary Results,* and for the reasons explained in the I&D Memo, we revised the margin calculations for Vinh Hoan[8], HVG and Golden Quality Seafood Corporation (''Golden Quality'').[9] Additionally, the Surrogate Values Memo contains further explanation of our changes to the surrogate values.[10]

Rate for Non-Selected Companies

We selected Vinh Hoan and HVG as mandatory respondents in this administrative review.[11] The statute and the Department's regulations do not directly address the establishment of a rate to be applied to individual companies not selected for individual examination where the Department limited its examination in an administrative review pursuant to section 777A(c)(2) of the Tariff Act of 1930, as amended (''the Act''). Section 735(c)(5)(A) of the Act instructs that we do not calculate an all-others rate using any zero or *de minimis* weighted-average dumping margins or any weighted-average dumping margins based entirely on facts available. Accordingly, the Department's usual practice is to average the rates for the selected companies excluding rates that are zero, *de minimis,* or based entirely on facts available.[12]

Therefore, consistent with section 735(c)(5)(A) of the Act and the Department's practice, we assigned the average rate calculated for Vinh Hoan and HVG to the Separate Rate Respondents. Because the rates calculated for Vinh Hoan and HVG changed since the *Preliminary Results,* the margin assigned to the Separate Rate Respondents also changed accordingly.

Vietnam-Wide Rate and Vietnam-Wide Entity

In the *Preliminary Results,* we determined that several companies failed to demonstrate their eligibility for a separate rate.[13] Therefore, we preliminarily assigned the entity a rate of 2.11 U.S. dollars (''USD'')/kilogram (''kg''), the current rate applied to the Vietnam-wide entity. As noted above in the ''Final Determination of No Shipments'' section, since the *Preliminary Results* we found that GODACO and Quang Minh had no reviewable entries. Consistent with Comment XXIII of the I&D Memo, we have not determined that GODACO and Quang Minh are part of the Vietnam-wide entity in this review. For the other companies, as there is no record information that provides a basis for

[4] *See* Memorandum to Gary Taverman, Senior Advisor, through James Doyle, Office Director, from Julia Hancock, Senior International Trade Compliance Analyst, ''Certain Frozen Fish Fillets from the Socialist Republic of Vietnam: Extension of Deadline for Final Results of Administrative Review, and Aligned New Shipper Review,'' dated February 25, 2014.

[5] Until July 1, 2004 these products were classifiable under HTSUS 0304.20.6030 (Frozen Catfish Fillets), 0304.20.6096 (Frozen Fish Fillets, NESOI), 0304.20.6043 (Frozen Freshwater Fish Fillets) and 0304.20.6057 (Frozen Sole Fillets). Until February 1, 2007 these products were classifiable under HTSUS 0304.20.6033 (Frozen Fish Fillets of the species *Pangasius,* including basa and tra). On March 2, 2011 the Department added two HTSUS numbers at the request of U.S. Customs and Border Protection (''CBP''): 1604.19.2000 and 1604 19.3000. On January 30, 2012 the Department added eight HTSUS numbers at the request of CBP: 0304.62.0020, 0305.59.0000, 1604.19.2100, 1604.19.3100, 1604.19.4100, 1604.19.5100, 1604.19.6100 and 1604.19.8100.

[6] *See* I&D Memo at 2–3.

[7] *See Non-Market Economy Antidumping Proceedings: Assessment of Antidumping Duties,* 76 FR 65694, 65694–65695 (October 24, 2011).

[8] The Vinh Hoan Corporation and its affiliates Van Duc Food Export Joint Company and Van Duc Tien Giang, collectively, ''Vinh Hoan.''

[9] *See* accompanying company-specific analysis memoranda, dated concurrently with this notice.

[10] *See* Memorandum to the File, through Scot T. Fullerton, Program Manager, Office V, from Paul Walker, Case Analyst, ''Certain Frozen Fish Fillets from the Socialist Republic of Vietnam: Surrogate Values for the Final Results,'' dated concurrently with this notice (''Surrogate Values Memo'').

[11] *Id.,* at 2.

[12] *See Ball Bearings and Parts Thereof from France, Germany, Italy, Japan, and the United Kingdom: Final Results of Antidumping Duty Administrative Reviews and Rescission of Review in Part,* 73 FR 52823, 52824 (September 11, 2008), and accompanying Issues and Decision Memorandum at Comment 16.

[13] *See Preliminary Results,* and accompanying Decision Memorandum at 11.

reconsidering the determination in the *Preliminary Results,* we will continue to apply the Vietnam-wide entity rate of 2.11 USD/kg to these companies.

Final Results of the Administrative Reviews

The weighted-average dumping margins for the administrative review are as follows:

Exporter	Weighted-average margin (dollars/kilogram) [14]
Vinh Hoan Corporation [15]	0.03
Hung Vuong Group [16]	1.20
An My Fish Joint Stock Company	0.42
Anvifish Joint Stock Company [17]	0.42
Asia Commerce Fisheries Joint Stock Company	0.42
Binh An Seafood Joint Stock Company	0.42
Cadovimex II Seafood Import-Export and Processing Joint Stock Company	0.42
Cantho Import-Export Seafood Joint Stock Company	0.42
Cuu Long Fish Import-Export Corporation [18]	0.42
Cuu Long Fish Joint Stock Company	0.42
East Sea Seafoods Limited Liability Company [19]	0.42
Green Farms Seafood Joint Stock Company	0.42
Hiep Thanh Seafood Joint Stock Company	0.42
Hoa Phat Seafood Import-Export and Processing JSC	0.42
International Development & Investment Corporation	0.42
NTSF Seafoods Joint Stock Company	0.42
QVD Food Company Ltd. [20]	0.42
Saigon Mekong Fishery Co., Ltd	0.42
Seafood Joint Stock Company No. 4 Branch Dongtam Fisheries Processing Company	0.42
Southern Fishery Industries Company Ltd	0.42
Sunrise Corporation	0.42
Thien Ma Seafood Co., Ltd	0.42
To Chau Joint Stock Company	0.42
Viet Phu Food & Fish Corporation	0.42
Vinh Quang Fisheries Corporation	0.42
Vietnam-Wide Rate [21]	2.11

The weighted-average dumping margin for the new shipper review is as follows:

Manufacturer	Exporter	Weighted-average margin (dollars/kilogram)
Golden Quality	Golden Quality	*de minimis.*

Assessment Rates

Pursuant to section 751(a)(2)(A) of the Act and 19 CFR 351.212(b), the Department will determine, and CBP shall assess, antidumping duties on all appropriate entries of subject merchandise in accordance with the final results of this review. The Department intends to issue appropriate assessment instructions directly to CBP 15 days after publication of the final results of this administrative review.

For assessment purposes, we calculated importer (or customer)-specific assessment rates for merchandise subject to this review. We

[14] In the third administrative review of this order, the Department determined that it would calculate per-unit assessment and cash deposit rates for all future reviews. *See Certain Frozen Fish Fillets from the Socialist Republic of Vietnam: Final Results of Antidumping Duty Administrative Review and Partial Rescission,* 73 FR 15479 (March 24, 2008).

[15] This rate is applicable to the Vinh Hoan Group which includes: Vinh Hoan, Van Duc, and VDTG. In the sixth administrative review of this order, the Department found Vinh Hoan, Van Duc, and VDTG to be a single entity and, because there have been no changes to this determination since that administrative review, we continue to find these companies to be part of a single entity. Therefore, we will assign this rate to the companies in the single entity. *See Certain Frozen Fish Fillets From the Socialist Republic of Vietnam: Notice of Preliminary Results and Partial Rescission of the Sixth Antidumping Duty Administrative Review and Sixth New Shipper Review,* 75 FR 56061 (September 15, 2010).

[16] This rate is applicable to the Hung Vuong Group, which includes: An Giang Fisheries Import and Export Joint Stock Company, Asia Pangasius Company Limited, Europe Joint Stock Company, Hung Vuong Joint Stock Company, Hung Vuong Mascato Company Limited, Hung Vuong—Vinh Long Co., Ltd., and Hung Vuong—Sa Dec Co., Ltd.

[17] Includes the trade name Anvifish Co., Ltd. and Anvifish JSC.

[18] Includes the trade name CL Panga Fish.

[19] Includes the trade names East Sea Seafoods LLC and ESS.

[20] This rate is also applicable to QVD Dong Thap Food Co., Ltd and Thuan Hung Co., Ltd. (''THUFICO''). In the second review of this order, the Department found QVD, QVD Dong Thap Food Co., Ltd. and THUFICO to be a single entity and, because there have been no changes to this determination since that administrative review, we continue to find these companies to be part of a single entity. Therefore, we will assign this rate to the companies in the single entity. *See Certain Frozen Fish Fillets from the Socialist Republic of Vietnam: Preliminary Results of Antidumping Duty Administrative Review,* 71 FR 53387 (September 11, 2006).

[21] The Vietnam-wide rate includes the following companies which are under review, but which did not submit a separate rate application or certification: East Sea Seafood Co., Ltd., East Sea Seafoods Joint Venture Co., Ltd., Hung Vuong Seafood Joint Stock Company, Nam Viet Company Limited, and Vinh Hoan Company Ltd.

will continue to direct CBP to assess importer-specific assessment rates based on the resulting per-unit (*i.e.,* per-kg) rates by the weight in kgs of each entry of the subject merchandise during the POR. Specifically, we calculated importer-specific duty assessment rates on a per-unit rate basis by dividing the total dumping margins (calculated as the difference between normal value and export price, or constructed export price) for each importer by the total sales quantity of subject merchandise sold to that importer during the POR. If an importer (or customer)-specific assessment rate is *de minimis* (*i.e.,* less than 0.50 percent), the Department will instruct CBP to assess that importer (or customer's) entries of subject merchandise without regard to antidumping duties, in accordance with 19 CFR 351.106(c)(2).

The Department determines that Afiex, An Phu, Bien Dong, GODACO, Navico, Thuan An and Quang Minh did not have any reviewable transactions during the POR. As a result, any suspended entries that entered under these exporters' case number (*i.e.,* at that exporter's rate) will be liquidated at the NME-wide rate.[22] Also, the Department determines that Dai Thanh, Fatifish and Hoang Long did not have any reviewable transactions during the period February 1, 2012 through July 31, 2012. As a result, any suspended entries that entered under these exporters' case number (*i.e.,* at that exporter's rate) will be liquidated at the NME-wide rate for this period.[23]

Cash Deposit Requirements

The following cash deposit requirements will be effective upon publication of the final results of this administrative review for all shipments of the subject merchandise entered, or withdrawn from warehouse, for consumption on or after the publication date, as provided for by section 751(a)(2)(C) of the Act: (1) For the exporters listed above, the cash deposit rate will be the rate established in the final results of review (except, if the rate is zero or *de minimis, i.e.,* less than 0.5 percent, a zero cash deposit rate will be required for that company); (2) for previously investigated or reviewed Vietnamese and non-Vietnamese exporters not listed above that have separate rates, the cash deposit rate will continue to be the exporter-specific rate published for the most recent period; (3) for all Vietnamese exporters of subject merchandise which have not been found to be entitled to a separate rate, the cash deposit rate will be the Vietnam-wide rate of 2.11 USD/kg; and (4) for all non-Vietnamese exporters of subject merchandise which have not received their own rate, the cash deposit rate will be the rate applicable to the Vietnamese exporters that supplied that non-Vietnamese exporter. The deposit requirements, when imposed, shall remain in effect until further notice.

The following cash deposit requirements will be effective upon publication of the final results of these new shipper reviews for all shipments of the subject merchandise entered, or withdrawn from warehouse, for consumption on or after the publication date, as provided for by section 751(a)(2)(C) of the Act: (1) For subject merchandise produced and exported by Golden Quality the cash deposit rate will be the rate established in the final results of this new shipper review; (2) for subject merchandise exported, but not manufactured by Golden Quality, the cash deposit rate will continue to be the Vietnam-wide rate, *i.e.,* $2.11/kg; and (3) for subject merchandise manufactured by Golden Quality and exported by any other party, the cash deposit rate will also be the Vietnam-wide rate. The cash deposit requirements, when imposed, shall remain in effect until further notice.

Reimbursement of Duties

This notice also serves as a final reminder to importers of their responsibility under 19 CFR 351.402(f) to file a certificate regarding the reimbursement of antidumping duties prior to liquidation of the relevant entries during this POR. Failure to comply with this requirement could result in the Department's presumption that reimbursement of antidumping duties occurred and the subsequent assessment of doubled antidumping duties.

Administrative Protective Orders

This notice also serves as a reminder to parties subject to administrative protective order (''APO'') of their responsibility concerning the return or destruction of proprietary information disclosed under APO in accordance with 19 CFR 351.305, which continues to govern business proprietary information in this segment of the proceeding. Timely written notification of the return or destruction of APO materials, or conversion to judicial protective order, is hereby requested. Failure to comply with the regulations and terms of an APO is a violation which is subject to sanction.

We are issuing and publishing these administrative reviews and notice in accordance with sections 751(a)(1) and 777(i) of the Act.

Dated: March 28, 2014.

Paul Piquado,

Assistant Secretary for Enforcement and Compliance.

Appendix—Issues and Decision Memorandum

Comment I: Selection of the Surrogate Country
Comment II: Surrogate Value for Whole, Live *Pangasius* Fish
Comment III: Surrogate Value for Fingerlings
Comment IV: Surrogate Value for Fish Feed
Comment V: Surrogate Value for Rice Husk
Comment VI: Surrogate Value for Labor
Comment VII: Surrogate Financial Ratios
Comment VIII: Surrogate Value for Lime
Comment IX: Surrogate Value for Fish Meal By-Product
Comment X: Surrogate Value for Fish Waste By-Products
Comment XI: Surrogate Value for Fresh Broken Fillets By-Product
Comment XII: Surrogate Value for Sawdust
Comment XIII: Surrogate Values for Truck Freight and Boat Freight
Comment XIV: Surrogate Value for Electricity
Comment XV: Surrogate Value for Diesel
Comment XVI: Surrogate Value for Containerization
Comment XVII: Surrogate Value for Marine Insurance
Comment XVIII: Surrogate Value for Water
Comment XIX: Surrogate Value for Brokerage and Handling
Comment XX: Surrogate Value for Salt
Comment XXI: Surrogate Values for CO Gas and Coal
Comment XXII: Vinh Hoan's Gross Weight vs. Net Weight for U.S. Sales and FOPs
Comment XXIII: Surrogate Value for Vinh Hoan's Fish Oil By-Product
Comment XXIV: Application of the Vietnam-Wide Rate to GODACO and Quang Minh

[FR Doc. 2014–07714 Filed 4–4–14; 8:45 am]

BILLING CODE 3510–DS–P

[22] *See Non-Market Economy Antidumping Proceedings: Assessment of Antidumping Duties,* 76 FR 65694 (October 24, 2011); *see also Preliminary Results,* and accompanying Decision Memorandum at 3.

[23] *Id.*

DEPARTMENT OF COMMERCE

International Trade Administration

[C–570–993, C–560–827]

Termination of Countervailing Duty Investigations; Monosodium Glutamate From the People's Republic of China and the Republic of Indonesia

AGENCY: Enforcement and Compliance, formerly Import Administration, International Trade Administration, Department of Commerce.

SUMMARY: On March 7, 2014, the Department of Commerce (the Department) received a letter from counsel to Ajinomoto Co., Inc. and

Ajinomoto North America Inc. (collectively, AJINA, or Petitioner). The letter notified the Department that Petitioner was withdrawing the petition filed on September 16, 2013 with respect to the countervailing duty (CVD) investigations of monosodium glutamate (MSG) from the People's Republic of China (PRC) and the Republic of Indonesia (Indonesia). In this instance, because producers accounting for substantially all of the production of the domestic like product expressed a lack of interest in issuance of an order, the Department is terminating these CVD investigations in accordance with section 782(h)(1) of the Tariff Act of 1930, as amended (the Act).

DATES: *Effective Date:* April 7, 2014.

FOR FURTHER INFORMATION CONTACT: Jun Jack Zhao or Nicholas Czajkowski, Office VII, AD/CVD Operations, Enforcement and Compliance, International Trade Administration, U.S. Department of Commerce, 14th Street and Constitution Avenue NW., Washington, DC 20230; telephone: (202) 482–1396 and (202) 482–1395, respectively.

SUPPLEMENTARY INFORMATION:

Background

On September 16, 2013, AJINA filed a petition alleging that countervailable subsidies were being provided to producers and exporters of MSG from Indonesia and the PRC.[1] On October 23, 2013, the Department initiated CVD investigations with respect to imports of MSG from Indonesia and the PRC.[2] On March 4, 2014, the Department reached its preliminary affirmative determination that countervailable subsidies were being provided to producers and exporters of MSG in the PRC; the Department also preliminarily determined that critical circumstances exist for imports of MSG from the PRC.[3] On that same date, the Department made a preliminary determination that countervailable subsidies were not being provided to producers and exporters of MSG in Indonesia; the Department also preliminarily determined that critical circumstances did not exist for imports of MSG from Indonesia.[4] On March 7, 2014, Petitioner withdrew its petition with respect to the CVD investigations on imports of MSG from Indonesia and the PRC.[5]

Scope of the Investigations

The scope of these investigations covers monosodium glutamate, whether or not blended or in solution with other products. Specifically, MSG that has been blended or is in solution with other product(s) is included in this scope when the resulting mix contains 15 percent or more of MSG by dry weight. Products with which MSG may be blended include, but are not limited to, salts, sugars, starches, maltodextrins, and various seasonings. Further, MSG is included in these investigations regardless of physical form (including, but not limited to, substrates, solutions, dry powders of any particle size, or unfinished forms such as MSG slurry), end-use application, or packaging.

MSG has a molecular formula of $C_5H_8NO_4Na$, a Chemical Abstract Service (CAS) registry number of 6106–04–3, and a Unique Ingredient Identifier (UNII) number of W81N5U6R6U.

Merchandise covered by the scope of these investigations is currently classified in the Harmonized Tariff Schedule (HTS) of the United States at subheading 2922.42.10.00. Merchandise subject to these investigations may also enter under HTS subheadings 2922.42.50.00, 2103.90.72.00, 2103.90.74.00, 2103.90.78.00, 2103.90.80.00, and 2103.90.90.91. The tariff classifications, CAS registry number, and UNII number are provided for convenience and customs purposes; however, the written description of the scope is dispositive.

Termination of the Countervailing Duty Investigations

Pursuant to section 782(h)(1) of the Act and 19 CFR 351.207(c), the Department may terminate an investigation based upon a lack of interest if the Department determines that producers accounting for substantially all of the production of that domestic like product expressed a lack of interest in issuance of an order. In these CVD investigations, AJINA represents 100 percent of the industry producing the domestic like product.[6] As such, because AJINA withdrew its CVD petition regarding MSG from Indonesia and the PRC and because AJINA constitutes 100 percent of the production of the domestic like product, the Department finds that producers accounting for substantially all—in this case, all—of the production of the domestic like product expressed a lack of interest in CVD orders, within the meaning of section 782(h)(1) of the Act. Consequently, we are terminating these CVD investigations and will direct U.S. Customs and Border Protection (CBP) to terminate the suspension of liquidation of entries of subject merchandise imported from the PRC. Because we have not directed CBP to suspend liquidation of entries of subject merchandise imported from Indonesia, we will not direct CBP to take any action regarding entries of subject merchandise imported from Indonesia.

This notice serves as a reminder to parties subject to administrative protective order (APO) of their responsibility concerning the disposition of proprietary information disclosed under APO in accordance with 19 CFR 351.305(a)(3). Timely written notification of the return or destruction of APO materials or conversion to judicial protective order is hereby requested. Failure to comply with the regulations and the terms of an APO is a violation that is subject to sanction.

This determination and notice are in accordance with section 782(h)(1) of the Act and 19 CFR 351.207(c).

Dated: March 31,2014.

Paul Piquado,

Assistant Secretary for Enforcement and Compliance.

[FR Doc. 2014–07716 Filed 4–4–14; 8:45 am]

BILLING CODE 3510–DS–P

[1] *See* Letter from Petitioner, ''Petition for Antidumping and Countervailing Duties: Monosodium Glutamate from the People's Republic of China and the Republic of Indonesia,'' dated September 16, 2013 (the petition).

[2] *See Monosodium Glutamate From the People's Republic of China and the Republic of Indonesia: Initiation of Countervailing Duty Investigations,* 78 FR 65269 (October 31, 2013).

[3] *See Monosodium Glutamate From the People's Republic of China: Preliminary Affirmative Countervailing Duty Determination; and Preliminary Affirmative Determination of Critical Circumstances,* 79 FR 13615 (March 11, 2014).

[4] *See Monosodium Glutamate From the Republic of Indonesia: Preliminary Negative Countervailing Duty Determination; and Preliminary Negative Determination of Critical Circumstances,* 79 FR 13614 (March 11, 2014).

[5] *See* Letter from Petitioner, ''Withdrawal of Countervailing Duty Petition,'' dated March 7, 2014.

[6] *See* the petition at Exhibit I–1.A.

DEPARTMENT OF COMMERCE

International Trade Administration

Notice of Scope Rulings

AGENCY: Enforcement and Compliance, formerly Import Administration, International Trade Administration, Department of Commerce.

DATES: *Effective Date:* April 7, 2014.

SUMMARY: The Department of Commerce (''Department'') hereby publishes a list of scope rulings and anticircumvention determinations made between October 1, 2013, and December 31, 2013. We intend to publish future lists after the close of the next calendar quarter.

FOR FURTHER INFORMATION CONTACT: Brenda E. Waters, AD/CVD Operations,

Customs Liaison Unit, Enforcement and Compliance, International Trade Administration, U.S. Department of Commerce, 14th Street and Constitution Avenue NW., Washington, DC 20230; telephone: 202–482–4735.

SUPPLEMENTARY INFORMATION:

Background

The Department's regulations provide that the Secretary will publish in the **Federal Register** a list of scope rulings on a quarterly basis.[1] Our most recent notification of scope rulings was published on February 3, 2014.[2] This current notice covers all scope rulings and anticircumvention determinations made by Enforcement and Compliance between October 1, 2013, and December 31, 2013, inclusive. Subsequent lists will follow after the close of each calendar quarter.

Scope Rulings Made Between October 1, 2013 and December 31, 2013

People's Republic of China

A–570–967 and C–570–968: Aluminum Extrusions From the People's Republic of China

Requestor: Kam Kiu Aluminum Products Sdn. Bhd. and Taishan City Kam Kiu Aluminum Extrusion Co. Ltd. (collectively, Kam Kiu); Kam Kiu's subparts for elastomeric metal bushings for automotive vehicles are within the scope of the order because they meet the description of merchandise subject to the orders and none of the enumerated exceptions applies; November 21, 2013.

A–570–967 and C–570–968: Aluminum Extrusions From the People's Republic of China

Requestor: Traffic Brick Network, LLC; Traffic Brick's aluminum event décor parts and kits, specifically Pipe Kits and Pipe and Drape Kits, are not within the scope of the order because they are finished gods kits that contain at the time of importation all parts necessary to fully assemble a complete display structure, while the individual Gorilla Pipes (upright and crossbar aluminum extrusion tubes of varying models) are within the scope of the order because they are not kits that contain all parts necessary to fully assemble a complete display structure; December 2, 2013.

A–570–941 and C–570–942: Certain Kitchen Appliance Shelving and Racks From the People's Republic of China

Requestor: Thermo Fisher Scientific (Asheville) LLC; Thermo Fisher's wire racks used in laboratory equipment are within the scope of the orders because they fit the written description and dimensions of the scope language; December 19, 2013.

A–570–932: Certain Steel Threaded Rod From the People's Republic of China

Requestor: IMSS, LLC; IMSS's threaded rod is not within scope of the antidumping duty order because the threaded rod meets the specific exclusion requirements identified in the scope language of the order; October 22, 2013.

A–570–835: Furfuryl Alcohol From the People's Republic of China

Requestor: PennAKem LLC; The blending of 0.3 percent of silane coupling compound additive into furfuryl alcohol is insufficient to exclude a product from the scope of the order, as such, furfuryl alcohol to which up to 0.3 percent of silane by volume has been added prior to importation (*i.e.,* a mixture of furfuryl alcohol and silane, of which the silane component comprises no more than 0.3 percent of the total volume of the blend), including but not limited to products with the trade name ''Faint S,'' is within the scope of the order; November 14, 2013.

A–570–970 and C–570–971: Multilayered Wood Flooring From the People's Republic of China

Requestor: Real Wood Floors, LLC; multilayered wood flooring imported by Real Wood Floors, LLC is within the scope of the antidumping and countervailing duty orders because the physical properties, the essential characteristic, and the end use of Real Wood Floors' rough lumber are significantly altered in the People's Republic of China, such that the imported product meets the physical description of merchandise covered by the antidumping and countervailing duty orders after being processed in the People's Republic of China; December 3, 2013.

A–570–504: Petroleum Wax Candles From the People's Republic of China

Requestor: HSE USA, Inc.; HSE's set of 10 candles is not within the scope of the antidumping duty order because the candles meet the definition for utility candles using the criteria set forth in 19 CFR 351.225(k)(2), as determined by the Department; December 13, 2013 (preliminary).

A–570–890: Wooden Bedroom From the People's Republic of China

Requestor: Whalen Furniture Manufacturing Inc.; Upholstered headboards are not within the scope of the antidumping duty order because they are completely upholstered and designed to work with metal bed frames; October 28, 2013.

Interested parties are invited to comment on the completeness of this list of completed scope and anticircumvention inquiries. Any comments should be submitted to the Deputy Assistant Secretary for AD/CVD Operations, Enforcement and Compliance, International Trade Administration, 14th Street and Constitution Avenue NW., APO/Dockets Unit, Room 1870, Washington, DC 20230.

This notice is published in accordance with 19 CFR 351.225(o).

Dated: March 26, 2014.

Christian Marsh,

Deputy Assistant Secretary for Antidumping and Countervailing Duty Operations.

[FR Doc. 2014–07715 Filed 4–4–14; 8:45 am]

BILLING CODE 3510–DS–P

[1] *See* 19 CFR 351.225(o).

[2] *See Notice of Scope Rulings,* 79 FR 6165 (February 3, 2014).

DEPARTMENT OF COMMERCE

National Oceanic and Atmospheric Administration

RIN 0648–XD183

Magnuson-Stevens Act Provisions; General Provisions for Domestic Fisheries; Application for Exempted Fishing Permits

AGENCY: National Marine Fisheries Service (NMFS), National Oceanic and Atmospheric Administration (NOAA), Commerce.

ACTION: Notice; request for comments.

SUMMARY: The Assistant Regional Administrator for Sustainable Fisheries, Northeast Region, NMFS (Assistant Regional Administrator), has made a preliminary determination that an Exempted Fishing Permit application contains all of the required information and warrants further consideration. This Exempted Fishing Permit would exempt commercial fishing vessels from the scallop trawl mesh size restriction to test an experimental trawl net as a means to reduce finfish bycatch in the southern New England and Mid-Atlantic scallop trawl fishery. The research is being conducted by Coonamessett Farm Foundation, Inc., under contract with the NMFS's Northeast Fisheries Science Center.

Regulations under the Magnuson-Stevens Fishery Conservation and Management Act require publication of this notification to provide interested parties the opportunity to comment on applications for proposed EFPs.

DATES: Comments must be received on or before April 22, 2014.

ADDRESSES: You may submit written comments by any of the following methods:

- Email: *nmfs.gar.efp@noaa.gov.* Include in the subject line ''Comments on CFFI Scallop Trawl Bycatch EFP.''
- Mail: John K. Bullard, Regional Administrator, NMFS, Greater Atlantic Region Fisheries Office, 55 Great Republic Drive, Gloucester, MA 01930. Mark the outside of the envelope ''Comments on CFFI Scallop Trawl Bycatch EFP.''
- Fax: (978) 281–9135.

FOR FURTHER INFORMATION CONTACT: Peter Christopher, Senior Fishery Policy Analyst, 978–281–9288.

SUPPLEMENTARY INFORMATION: Coonamessett Farm Foundation, Inc. (CFFI) submitted a complete application for an Exempted Fishing Permit (EFP) on February 27, 2014, to conduct commercial fishing activities that the regulations would otherwise restrict. The EFP would exempt 6 vessels from the 5.5-in (13.97-cm) minimum mesh size for scallop trawl gear, and would temporarily exempt the vessels from possession and minimum fish size limits for all species of fish in order for researchers to conduct onboard sampling. All fishing activity will otherwise be conducted under and consistent with normal scallop fishing operations.

This project proposes to test the effectiveness of a turtle excluder device (TED) in reducing finfish bycatch. Scallop trawls will be equipped with a TED in the extension of the net. The TED includes several rows of 3.5-in (8.89-cm) mesh to prevent turtle entanglement as it passes through the TED extension. The TED gear is not currently required in the scallop trawl fishery and this project is not evaluating the TED's effectiveness in reducing turtle catch. In order to estimate bycatch, CFFI personnel onboard the vessels will measure and record all catch (or subsamples) after each tow. Researchers from CFFI will work with 6 commercial fishing vessels. Each vessel will use the gear during otherwise normal scallop fishing operations for 5 days, 6 tows per day, for a total of up to 30 tows per vessel, and 180 tows for the project. All catch will be sampled onboard using standard catch sampling methods consistent with the researcher's contract with the Northeast Fisheries Science Center. Vessels would retain and land scallops and all other legal catch. Research will be conducted from May through October and will occur in southern New England and Mid-Atlantic waters.

NMFS has preliminarily determined that the CFFI application contains all of the required information. NMFS has preliminarily determined that the purpose, design and administration of the exemptions are consistent with the Scallop Fishery Management Plan's management objectives, the Magnuson-Stevens Fishery Conservation and Management Act, and other applicable law. Further, granting the exemption is not expected to have a detrimental effect on the fishery resources, cause any quota to be exceeded, or create any significant enforcement problems. Therefore, the application warrants further consideration.

If approved, the applicant may request minor modifications and extensions to the EFP throughout the year. EFP modifications and extensions may be granted without further notice if they are deemed essential to facilitate completion of the proposed research and have minimal impacts that do not change the scope or impact of the initially approved EFP request. Any fishing activity conducted outside the scope of the exempted fishing activity would be prohibited.

Authority: 16 U.S.C. 1801 *et seq.*

Dated: April 2, 2014.

James P. Burgess,

Acting Deputy Director, Office of Sustainable Fisheries, National Marine Fisheries Service.

[FR Doc. 2014–07728 Filed 4–4–14; 8:45 am]

BILLING CODE 3510–22–P

DEPARTMENT OF COMMERCE

National Oceanic and Atmospheric Administration

RIN 0648–XD227

Gulf of Mexico Fishery Management Council (Council); Public Meeting

AGENCY: National Marine Fisheries Service (NMFS), National Oceanic and Atmospheric Administration (NOAA), Commerce.

ACTION: Notice of a public meeting.

SUMMARY: The Gulf of Mexico Fishery Management Council (Council) will hold a joint meeting of its Coral Scientific and Statistical Committee and Coral Advisory Panel.

DATES: The meeting will be held from 8:30 a.m. until 4:30 p.m. on Thursday, April 24, 2014.

ADDRESSES: The meeting will be held at the Gulf of Mexico Fishery Management Council office, 2203 North Lois Avenue, Suite 1100, Tampa, FL, 33607.

FOR FURTHER INFORMATION CONTACT: Mr. Mark Mueller, GIS Analyst, Gulf of Mexico Fishery Management Council; telephone: (813) 348–1630; fax: (813) 348–1711; email: *mark.mueller@gulfcouncil.org.*

SUPPLEMENTARY INFORMATION: The items of discussion on the agenda are as follows:

Joint meeting of the Gulf Council's Coral Scientific and Statistical Committee and Coral Advisory Panel Meeting Agenda, Thursday, April 24, 2014, 8:30 a.m. until 4:30 a.m.

1. Election of Coral AP and Coral SSC chairs
2. Adoption of agenda
3. Approval of minutes from last meetings
   a. Coral SSC, March 8, 2012
   b. Joint Coral AP/Coral SSC, September 2, 2004
4. Council charge and action guide
5. Summary presentation of Workshop on Interrelationships between Corals and Fisheries
   a. Review the findings and recommendations of the workshop report
6. Discussion of workshop recommendations and new information
   a. Summary of new habitat and ecological data
   b. Discussion of Coral Essential Fish Habitat
   c. Live rock areas
   d. Discussion on Habitat Areas of Particular Concern (HAPCs)
      i. Locations
      ii. Potential fishing gear interactions
      iii. Potential boundary options
   e. Recommendations
7. Update on endangered and threatened species listing status
8. Other Business

Adjourn

Although non-emergency issues not contained in this agenda may come before this group for discussion, those issues may not be the subject of formal action during this meeting. Action will be restricted to those issues specifically identified in this notice and any issues arising after publication of this notice that require emergency action under section 305(c) of the Magnuson-Stevens Fishery Conservation and Management Act, provided the public has been notified of the Council's intent to take final action to address the emergency.

Special Accommodations

The meeting is physically accessible to people with disabilities. Requests for sign language interpretation or other auxiliary aids should be directed to

Kathy Pereira at the Council Office (see **ADDRESSES**), at least 5 working days prior to the meeting.

Note: The times and sequence specified in this agenda are subject to change.

Authority: 16 U.S.C. 1801 *et seq.*

Dated: April 2, 2014.

Tracey L. Thompson,

Acting Deputy Director, Office of Sustainable Fisheries, National Marine Fisheries Service.

[FR Doc. 2014–07689 Filed 4–4–14; 8:45 am]

BILLING CODE 3510–22–P

DEPARTMENT OF COMMERCE

National Oceanic and Atmospheric Administration

RIN 0648–XD216

Fisheries of the Gulf of Mexico and South Atlantic; Southeast Data, Assessment, and Review (SEDAR); Public Meetings

AGENCY: National Marine Fisheries Service (NMFS), National Oceanic and Atmospheric Administration (NOAA), Commerce.

ACTION: Notice of SEDAR 38 assessment process webinars for Gulf of Mexico and South Atlantic King Mackerel.

SUMMARY: The SEDAR 38 assessment of Gulf of Mexico and South Atlantic King Mackerel will consist of a workshop and series of webinars. This notice is for the first two webinars associated with the Assessment portion of the SEDAR process. See **SUPPLEMENTARY INFORMATION**.

DATES: The first two assessment webinars for SEDAR 38 will be held from 10 a.m. until 1 p.m. on Thursday, April 24, 2014 and from 10 a.m. until 1 p.m. on Wednesday, May 14, 2014.

ADDRESSES:

Meeting address: The meetings will be held via webinar. The webinar is open to the public. Those interested in participating should contact Julie A. Neer at SEDAR (see **FOR FURTHER INFORMATION CONTACT** below) to request an invitation providing webinar access information. Please request webinar invitations at least 24 hours in advance of each webinar.

SEDAR address: 4055 Faber Place Drive, Suite 201, N. Charleston, SC 29405.

FOR FURTHER INFORMATION CONTACT: Julie A. Neer, SEDAR Coordinator; telephone: (843) 571–4366; email: *julie.neer@safmc.net.*

SUPPLEMENTARY INFORMATION: The Gulf of Mexico, South Atlantic, and Caribbean Fishery Management Councils, in conjunction with NOAA Fisheries and the Atlantic and Gulf States Marine Fisheries Commissions, have implemented the Southeast Data, Assessment and Review (SEDAR) process, a multi-step method for determining the status of fish stocks in the Southeast Region. SEDAR is a multi-step process including: (1) Data/Assessment Workshop; and (2) a series of webinars. The product of the Data/Assessment Workshop is a report which compiles and evaluates potential datasets and recommends which datasets are appropriate for assessment analyses; and describes the fisheries, evaluates the status of the stock, estimates biological benchmarks, projects future population conditions, and recommends research and monitoring needs. Participants for SEDAR Workshops are appointed by the Gulf of Mexico, South Atlantic, and Caribbean Fishery Management Councils and NOAA Fisheries Southeast Regional Office, Highly Migratory Species Management Division, and Southeast Fisheries Science Center. Participants include: data collectors and database managers; stock assessment scientists, biologists, and researchers; constituency representatives including fishermen, environmentalists, and non-governmental organizations (NGOs); international experts; and staff of Councils, Commissions, and state and federal agencies.

The items of discussion in the Assessment Process webinars are as follows:

1. Using datasets and initial assessment analysis recommended from the Assessment Workshop, panelists will employ assessment models to evaluate stock status, estimate population benchmarks and management criteria, and project future conditions.

2. Panelists will recommend the most appropriate methods and configurations for determining stock status and estimating population parameters.

Although non-emergency issues not contained in this agenda may come before this group for discussion, those issues may not be the subject of formal action during these meetings. Action will be restricted to those issues specifically identified in this notice and any issues arising after publication of this notice that require emergency action under section 305(c) of the Magnuson-Stevens Fishery Conservation and Management Act, provided the public has been notified of the intent to take final action to address the emergency.

Special Accommodations

These meetings are physically accessible to people with disabilities. Requests for sign language interpretation or other auxiliary aids should be directed to the Council office (see **ADDRESSES**) at least 10 business days prior to the meeting.

Note: The times and sequence specified in this agenda are subject to change.

Authority: 16 U.S.C. 1801 *et seq.*

Dated: April 2, 2014.

Tracey L. Thompson,

Acting Deputy Director, Office of Sustainable Fisheries, National Marine Fisheries Service.

[FR Doc. 2014–07687 Filed 4–4–14; 8:45 am]

BILLING CODE 3510–22–P

DEPARTMENT OF COMMERCE

National Oceanic and Atmospheric Administration

RIN 0648–XD223

Mid-Atlantic Fishery Management Council (MAFMC); Public Meeting

AGENCY: National Marine Fisheries Service (NMFS), National Oceanic and Atmospheric Administration (NOAA), Commerce.

ACTION: Notice of a public meeting.

SUMMARY: The Mid-Atlantic Fishery Management Council's (Council) Ecosystem and Ocean Planning Committee will hold a public meeting.

DATES: The meeting will be held on April 28, 2014, from 1:30 p.m. until 3 p.m.

ADDRESSES: The meeting will be held via webinar with a telephone-only connection option. Details on webinar registration and telephone-only connection details are available at: *http://www.mafmc.org.*

Council address: Mid-Atlantic Fishery Management Council, 800 North State Street, Suite 201, Dover, DE 19901; telephone: (302) 674–2331.

FOR FURTHER INFORMATION CONTACT: Christopher M. Moore Ph.D., Executive Director, Mid-Atlantic Fishery Management Council, 800 N. State Street, Suite 201, Dover, DE 19901; telephone: (302) 526–5255.

SUPPLEMENTARY INFORMATION: The Ecosystem and Ocean Planning Committee is meeting to receive a presentation by Rutgers and the Nature Conservancy on their Data Portal Project. This project produces illustrative maps of Mid-Atlantic fishing activity summarized by port and gear groups. During this meeting, the

Committee will provide input to the project team on best approaches and opportunities for engaging fishermen to review, discuss, and improve the project data and map products.

Although non-emergency issues not contained in this agenda may come before this group for discussion, those issues may not be the subject of formal action during this meeting. Action will be restricted to those issues specifically listed in this notice and any issues arising after publication of this notice that require emergency action under section 305(c) of the Magnuson-Stevens Fishery Conservation and Management Act, provided the public has been notified of the Council's intent to take final action to address the emergency.

Special Accommodations

The meeting is physically accessible to people with disabilities. Requests for sign language interpretation or other auxiliary aids should be directed to M. Jan Saunders at the Mid-Atlantic Council Office, (302) 526–5251, at least 5 days prior to the meeting date.

Dated: April 2, 2014.

Tracey L. Thompson,

Acting Deputy Director, Office of Sustainable Fisheries, National Marine Fisheries Service.

[FR Doc. 2014–07688 Filed 4–4–14; 8:45 am]

BILLING CODE 3510–22–P

DEPARTMENT OF EDUCATION

[Docket No.: ED–2014–ICCD–0054]

Agency Information Collection Activities; Comment Request; Study of Enhanced College Advising in Upward Bound

AGENCY: Institute of Education Sciences/National Center for Education Statistics (IES), Department of Education (ED).

ACTION: Notice.

SUMMARY: In accordance with the Paperwork Reduction Act of 1995 (44 U.S.C. chapter 3501 *et seq.*), ED is proposing a new information collection.

DATES: Interested persons are invited to submit comments on or before June 6, 2014.

ADDRESSES: Comments submitted in response to this notice should be submitted electronically through the Federal eRulemaking Portal at *http://www.regulations.gov* by selecting Docket ID number ED–2014–ICCD–0054 or via postal mail, commercial delivery, or hand delivery. If the regulations.gov site is not available to the public for any reason, ED will temporarily accept comments at *ICDocketMgr@ed.gov.* Please note that comments submitted by fax or email and those submitted after the comment period will not be accepted; ED will only accept comments during the comment period in this mailbox when the regulations.gov site is not available. Written requests for information or comments submitted by postal mail or delivery should be addressed to the Director of the Information Collection Clearance Division, U.S. Department of Education, 400 Maryland Avenue SW., LBJ, Mailstop L–OM–2–2E319, Room 2E105, Washington, DC 20202.

FOR FURTHER INFORMATION CONTACT: For specific questions related to collection activities, please contact Marsha Silverberg, 202–208–7178.

SUPPLEMENTARY INFORMATION: The Department of Education (ED), in accordance with the Paperwork Reduction Act of 1995 (PRA) (44 U.S.C. 3506(c)(2)(A)), provides the general public and Federal agencies with an opportunity to comment on proposed, revised, and continuing collections of information. This helps the Department assess the impact of its information collection requirements and minimize the public's reporting burden. It also helps the public understand the Department's information collection requirements and provide the requested data in the desired format. ED is soliciting comments on the proposed information collection request (ICR) that is described below. The Department of Education is especially interested in public comment addressing the following issues: (1) Is this collection necessary to the proper functions of the Department; (2) will this information be processed and used in a timely manner; (3) is the estimate of burden accurate; (4) how might the Department enhance the quality, utility, and clarity of the information to be collected; and (5) how might the Department minimize the burden of this collection on the respondents, including through the use of information technology. Please note that written comments received in response to this notice will be considered public records.

Title of Collection: Study of Enhanced College Advising in Upward Bound.

OMB Control Number: 1850—NEW.

Type of Review: A new information collection.

Respondents/Affected Public: Individuals or households.

Total Estimated Number of Annual Responses: 4,200.

Total Estimated Number of Annual Burden Hours: 1,400.

Abstract: The Study of Enhanced College Advising in Upward Bound will test the effectiveness of providing Upward Bound projects with a professional development package and tools to provide semi-customized college advising to students participating in Upward Bound. Upward Bound projects will be invited to volunteer for the demonstration, and the first 200 projects to volunteer for the demonstration will be included. Volunteer projects will be randomly assigned so that half receive the staff training, materials, tools, and resources in the first wave (spring, summer, fall 2015), and the other half will receive the staff training, materials, tools, and resources in the second wave (summer and fall 2016). The study will follow students who participate in both groups of projects as 11th graders in the 2014–2015 school year. The study will examine the impact of the demonstration on key outcomes including college application behavior, college acceptance and matriculation, and receipt of financial aid. This first of two ICRs for the study requests approval for the overall evaluation design, to collect 11th grade student rosters at each participating project in order to define the evaluation sample, and to administer the student baseline survey. A later ICR will request approval for other data collection, including a Project Director survey and a follow-up student survey.

Dated: April 1, 2014.

Stephanie Valentine,

Acting Director, Information Collection Clearance Division, Privacy, Information and Records Management Services, Office of Management.

[FR Doc. 2014–07593 Filed 4–4–14; 8:45 am]

BILLING CODE 4000–01–P

DEPARTMENT OF EDUCATION

[Docket No.: ED–2014–ICCD–0056]

Agency Information Collection Activities; Submission to the Office of Management and Budget for Review and Approval; Comment Request; Promoting Postbaccalaureate Opportunities for Hispanic Americans

AGENCY: Office of Postsecondary Education (OPE), Department of Education (ED).

ACTION: Notice.

SUMMARY: In accordance with the Paperwork Reduction Act of 1995 (44 U.S.C. chapter 3501 *et seq.*), ED is proposing a reinstatement of a previously approved information collection.

DATES: Interested persons are invited to submit comments on or before May 7, 2014.

ADDRESSES: Comments submitted in response to this notice should be submitted electronically through the Federal eRulemaking Portal at *http://www.regulations.gov* by selecting Docket ID number ED–2014–ICCD–0056 or via postal mail, commercial delivery, or hand delivery. If the regulations.gov site is not available to the public for any reason, ED will temporarily accept comments at *ICDocketMgr@ed.gov.* Please note that comments submitted by fax or email and those submitted after the comment period will not be accepted; ED will only accept comments during the comment period in this mailbox when the regulations.gov site is not available. Written requests for information or comments submitted by postal mail or delivery should be addressed to the Director of the Information Collection Clearance Division, U.S. Department of Education, 400 Maryland Avenue SW, LBJ, Mailstop L–OM–2–2E319, Room 2E105, Washington, DC 20202.

FOR FURTHER INFORMATION CONTACT: For specific questions related to collection activities, please contact Maria Carrington, 202–502–7548.

SUPPLEMENTARY INFORMATION: The Department of Education (ED), in accordance with the Paperwork Reduction Act of 1995 (PRA) (44 U.S.C. 3506(c)(2)(A)), provides the general public and Federal agencies with an opportunity to comment on proposed, revised, and continuing collections of information. This helps the Department assess the impact of its information collection requirements and minimize the public's reporting burden. It also helps the public understand the Department's information collection requirements and provide the requested data in the desired format. ED is soliciting comments on the proposed information collection request (ICR) that is described below. The Department of Education is especially interested in public comment addressing the following issues: (1) Is this collection necessary to the proper functions of the Department; (2) will this information be processed and used in a timely manner; (3) is the estimate of burden accurate; (4) how might the Department enhance the quality, utility, and clarity of the information to be collected; and (5) how might the Department minimize the burden of this collection on the respondents, including through the use of information technology. Please note that written comments received in response to this notice will be considered public records.

Title of Collection: Promoting Postbaccalaureate Opportunities for Hispanic Americans.

OMB Control Number: 1840–0804.

Type of Review: A reinstatement of a previously approved information collection.

Respondents/Affected Public: Private sector.

Total Estimated Number of Annual Responses: 100.

Total Estimated Number of Annual Burden Hours: 75.

Abstract: Collection of the information is necessary in order for the Secretary of Education to carry out the graduate Promoting Postbaccalaureate Opportunities For Hispanic Americans Program under Title V, Part B of the Higher Education Act of 1965, as amended. The information will be used in the evaluation process to determine whether proposed activities are consistent with legislated activities and to determine the dollar share of the Congressional appropriation to be awarded to successful applicants.

Dated: April 1, 2014.

Stephanie Valentine,

Acting Director, Information Collection Clearance Division, Privacy, Information and Records Management Services, Office of Management.

[FR Doc. 2014–07594 Filed 4–4–14; 8:45 am]

BILLING CODE 4000–01–P

DEPARTMENT OF ENERGY

Environmental Management Site-Specific Advisory Board Chairs

AGENCY: Department of Energy.

ACTION: Notice of Open Meeting.

SUMMARY: This notice announces a meeting of the Environmental Management Site-Specific Advisory Board (EM SSAB) Chairs. The Federal Advisory Committee Act (Pub. L. 92–463, 86 Stat. 770) requires that public notice of this meeting be announced in the **Federal Register**.

DATES:

Wednesday, April 23, 2014 8:00 a.m.–5:00 p.m.

Thursday, April 24, 2014 8:00 a.m.–12:15 p.m.

ADDRESSES: Red Lion Hotel Pasco, 2525 N. 20th Avenue, Pasco, WA 99352.

FOR FURTHER INFORMATION CONTACT: David Borak, Acting Designated Federal Officer, U.S. Department of Energy, 1000 Independence Avenue SW., Washington, DC 20585; Phone: (202) 586–9928.

SUPPLEMENTARY INFORMATION:

Purpose of the Board: The purpose of the Board is to make recommendations to DOE–EM and site management in the areas of environmental restoration, waste management, and related activities.

Tentative Agenda Topics:

Wednesday, April 23, 2014

- EM Program Update
- EM SSAB Chairs' Round Robin: Topics, Achievements, and Accomplishments
- EM Headquarters Budget Update
- EM Headquarters Waste Disposition Strategies
- Public Comment Period

Thursday April 24, 2014

- DOE Headquarters News and Views
- Groundwater Demonstration
- Public Comment

Public Participation: The EM SSAB Chairs welcome the attendance of the public at their advisory committee meetings and will make every effort to accommodate persons with physical disabilities or special needs. If you require special accommodations due to a disability, please contact Catherine Alexander at least seven days in advance of the meeting at the phone number listed above. Written statements may be filed either before or after the meeting with the Acting Designated Federal Officer, David Borak, at the address or telephone listed above. Individuals who wish to make oral statements pertaining to agenda items should also contact David Borak. Requests must be received five days prior to the meeting and reasonable provision will be made to include the presentation in the agenda. The Acting Designated Federal Officer is empowered to conduct the meeting in a fashion that will facilitate the orderly conduct of business. Individuals wishing to make public comment will be provided a maximum of five minutes to present their comments.

Minutes: Minutes will be available by writing or calling David Borak at the address or phone number listed above. Minutes will also be available at the following Web site: *http://www.em.doe.gov/stakepages/ssabchairs.aspx.*

Issued at Washington, DC, on April 1, 2014.

LaTanya R. Butler,

Deputy Committee Management Officer.

[FR Doc. 2014–07697 Filed 4–4–14; 8:45 am]

BILLING CODE 6450–01–P

DEPARTMENT OF ENERGY

Federal Energy Regulatory Commission

[Project No. 12721–006]

Pepperell Hydro Company, LLC; Notice of Application Accepted for Filing With the Commission, Intent To Waive Scoping, Soliciting Motions To Intervene and Protests, Ready for Environmental Analysis, and Soliciting Comments, Terms and Conditions, Recommendations, and Prescriptions, and Establishing an Expedited Schedule for Processing

Take notice that the following hydroelectric application has been filed with the Commission and is available for public inspection.

a. *Type of Application:* Original Major License.

b. *Project No.:* 12721–006.

c. *Date filed:* October 9, 2013.

d. *Applicant:* Pepperell Hydro Company, LLC.

e. *Name of Project:* Pepperell Hydroelectric Project.

f. *Location:* On the Nashua River, in the town of Pepperell, Middlesex County, Massachusetts. The project would not occupy lands of the United States.

g. *Filed Pursuant to:* Federal Power Act 16 U.S.C. 791(a)–825(r).

h. *Applicant Contact:* Dr. Peter B. Clark, 823 Bay Road, P.O. Box 149, Hamilton, MA 01936; (978) 468–3999; or *pclark@swiftrivercompany.com*.

i. *FERC Contact:* Brandon Cherry at (202) 502–8328 or *brandon.cherry@ferc.gov*.

j. *Deadline for filing motions to intervene and protests, comments, terms and conditions, recommendations, and prescriptions:* 60 days from the issuance date of this notice; reply comments are due 105 days from the issuance date of this notice.

The Commission strongly encourages electronic filing. Please file motions to intervene and protests, comments, terms and conditions, recommendations, and prescriptions using the Commission's eFiling system at *http://www.ferc.gov/docs-filing/efiling.asp*. Commenters can submit brief comments up to 6,000 characters, without prior registration, using the eComment system at *http://www.ferc.gov/docs-filing/ecomment.asp*. You must include your name and contact information at the end of your comments. For assistance, please contact FERC Online Support at *FERCOnlineSupport@ferc.gov*, (866) 208–3676 (toll free), or (202) 502–8659 (TTY). In lieu of electronic filing, please send a paper copy to: Secretary, Federal Energy Regulatory Commission, 888 First Street NE., Washington, DC 20426. The first page of any filing should include docket number P–12721–006.

The Commission's Rules of Practice require all intervenors filing documents with the Commission to serve a copy of that document on each person on the official service list for the project. Further, if an intervenor files comments or documents with the Commission relating to the merits of an issue that may affect the responsibilities of a particular resource agency, they must also serve a copy of the document on that resource agency.

k. This application has been accepted for filing and is now ready for environmental analysis.

l. The existing, unlicensed Pepperell Hydroelectric Project consists of: (1) The 23.5-foot-high, 251-foot-long concrete gravity ogee Pepperell Paper dam that includes a 244-foot-long spillway with a crest elevation of 197.0 feet North American Vertical Datum 1988 (NAVD88) and 3-foot-high wooden flashboards; (2) a 3.5-mile-long, 294-acre impoundment with a normal water surface elevation of 200.0 feet NAVD88; (3) a 25-foot-long, 26-foot-wide intake structure with two 7.75-foot-wide, 14-foot-high leaf intake gates; (4) a 12-foot-diameter, 565.5-foot-long penstock; (5) a 14- to 58-foot-wide, 25.5-foot-long forebay structure that includes a 1.5-foot-diameter gate with low level drain pipe and a 4.25-foot-wide, 3.5-foot-high trash sluice gate; (6) six 8-foot-wide, 10-foot-high turbine bay headgates with 17.33-foot-high trashracks with 1.75-inch clear bar spacing; (7) a 62-foot-wide, 41-foot-long powerhouse containing a 640-kilowatt (kW) turbine-generating unit, an approximately 735-kW turbine-generating unit, and an approximately 764-kW turbine-generating unit for a total installed capacity of 2,139 kW; (8) three 11.5-foot-long turbine draft tubes; (9) three 30-foot-long, 600-volt transmission lines connecting the turbine-generating units to National Grid's Massachusetts Electric Company's distribution system; and (10) appurtenant facilities.

The existing project also includes a downstream fish passage facility that consists of: (1) A 3-foot-wide, 23-foot-long concrete intake with a 4-foot-wide, 8-foot-high entrance gate; (2) a collection channel with a 2-foot-high, 2-foot-wide overflow stoplog notch; and (3) a 5-foot-deep plunge pool.

The existing project bypasses approximately 700 feet of the Nashua River.

Pepperell Hydro Company, LLC proposes to install a new low flow turbine-generating unit at the dam. The proposed project features would consist of: (1) A 15-foot-long, 8-foot-wide, and 22-foot-high intake tower that includes a 4-foot-wide, 4.5-foot-high low level drain; (2) a 14-foot-long, 3.25-foot-wide trashrack with 0.5-inch clear bar spacing; (3) a 3.5-foot-diameter, 24-foot-long penstock; (4) a 67.5-kW low flow turbine-generating unit; (5) a 4-foot-long turbine draft tube; and (6) a 650-foot-long, 600-volt transmission line connecting the low flow turbine-generating unit to the existing powerhouse.

Pepperell Hydro Company, LLC proposes to operate the project in a run-of-river mode and release: (1) 46 cubic feet per second (cfs) or inflow to the bypassed reach from March 1 through November 30, which would include 17 cfs or inflow through the existing downstream fish passage facility from June 15 through October 30; and (2) 15 cfs or inflow to the bypassed reach from December 1 through February 28. The project would have an estimated average annual generation of 7,997 megawatt-hours.

m. Due to the project works already existing and the limited scope of proposed modifications to the project site described above, the applicant's coordination with federal and state agencies during the preparation of the application, and completed studies during pre-filing consultation, we intend to waive scoping and expedite the licensing process. Based on a review of the application, resource agency consultation letters, and comments filed to date, Commission staff intends to prepare a single environmental assessment (EA). Commission staff determined that the issues that need to be addressed in its EA have been adequately identified during the pre-filing period, and no new issues are likely to be identified through additional scoping. The EA will consider assessing the potential effects of project construction and operation on geology and soils, aquatic, terrestrial, threatened and endangered species, recreation and land use, aesthetic, and cultural and historic resources.

n. A copy of the application is available for review at the Commission in the Public Reference Room or may be viewed on the Commission's Web site at *http://www.ferc.gov* using the ''eLibrary'' link. Enter the docket number excluding the last three digits in the docket number field to access the document. For assistance, contact FERC Online Support.

Register online at *http://www.ferc.gov/docs-filing/esubscription.asp* to be notified via email of new filings and issuances

related to this or other pending projects. For assistance, contact FERC Online Support.

o. Any qualified applicant desiring to file a competing application must submit to the Commission, on or before the specified intervention deadline date, a competing development application, or a notice of intent to file such an application. Submission of a timely notice of intent allows an interested person to file the competing development application no later than 120 days after the specified intervention deadline date. Applications for preliminary permits will not be accepted in response to this notice.

A notice of intent must specify the exact name, business address, and telephone number of the prospective applicant, and must include an unequivocal statement of intent to submit a development application. A notice of intent must be served on the applicant(s) named in this public notice.

Anyone may submit comments, a protest, or a motion to intervene in accordance with the requirements of Rules of Practice and Procedure, 18 CFR 385.210, .211, and .214. In determining the appropriate action to take, the Commission will consider all protests or other comments filed, but only those who file a motion to intervene in accordance with the Commission's Rules may become a party to the proceeding. Any comments, protests, or motions to intervene must be received on or before the specified comment date for the particular application.

All filings must (1) bear in all capital letters the title ''PROTEST,'' ''MOTION TO INTERVENE,'' ''NOTICE OF INTENT TO FILE COMPETING APPLICATION,'' ''COMPETING APPLICATION,'' ''COMMENTS,'' ''REPLY COMMENTS,'' ''RECOMMENDATIONS,'' ''TERMS AND CONDITIONS,'' or ''PRESCRIPTIONS;'' (2) set forth in the heading the name of the applicant and the project number of the application to which the filing responds; (3) furnish the name, address, and telephone number of the person protesting or intervening; and (4) otherwise comply with the requirements of 18 CFR 385.2001 through 385.2005. All comments, recommendations, terms and conditions or prescriptions must set forth their evidentiary basis and otherwise comply with the requirements of 18 CFR 4.34(b). Agencies may obtain copies of the application directly from the applicant. A copy of any protest or motion to intervene must be served upon each representative of the applicant specified in the particular application. A copy of all other filings in reference to this application must be accompanied by proof of service on all persons listed in the service list prepared by the Commission in this proceeding, in accordance with 18 CFR 4.34(b) and 385.2010.

p. *A license applicant must file no later than 60 days following the date of issuance of this notice:* (1) A copy of the water quality certification; (2) a copy of the request for certification, including proof of the date on which the certifying agency received the request; or (3) evidence of waiver of water quality certification.

q. *Procedural schedule:* The application will be processed according to the following procedural schedule. Revisions to the schedule may be made as appropriate.

Milestone	Target date
Issue Notice of the Availability of the EA.	August 2014.

Dated: April 1, 2014.

Kimberly D. Bose,

Secretary.

[FR Doc. 2014–07691 Filed 4–4–14; 8:45 am]

BILLING CODE 6717–01–P

DEPARTMENT OF ENERGY

Federal Energy Regulatory Commission

[Project No. 13884–002]

Pennamaquan Tidal Power, LLC; Notice of Preliminary Permit Application Accepted for Filing And Soliciting Comments, Motions To Intervene, and Competing Applications

On March 12, 2014, Pennamaquan Tidal Power, LLC filed an application for a successive preliminary permit, pursuant to section 4(f) of the Federal Power Act (FPA), proposing to study the feasibility of the Pennamaquan Tidal Power Plant Project to be located on the Pennamaquan River and Cobscook Bay, Washington County, Maine. The sole purpose of a preliminary permit, if issued, is to grant the permit holder priority to file a license application during the permit term. A preliminary permit does not authorize the permit holder to perform any land-disturbing activities or otherwise enter upon lands or waters owned by others without the owners' express permission.

The proposed project would consist of: (1) A new tidal barrage extending from Leighton Neck to Hersey Neck consisting of: (a) Two 5-foot-thick concrete walls, one 545-foot-long and one 135-foot-long, located in the intertidal area at each end of the barrage; (b) six 82-foot-long, 10-foot-thick concrete modular wall panels extending about 22 feet above mean low tide; (c) a new 438-foot-long, 91-foot-high concrete powerhouse with 16 reversible bulb generating units with a total capacity of 24.0 megawatts; (d) a new steel 65-foot-long, 44-foot-wide boat lock integral with the powerhouse; (2) a tidal basin (i.e., impoundment) with a surface area of 489 acres at low tide and 862 acres at high tide; (3) a new 328-foot-long utility road providing access from Hersey Neck to the powerhouse; and (4) a new 35 kilovolt, 2.5-mile-long transmission line to Emera Maine's substation in Pembroke, Maine. The project would produce an estimated average annual generation of 80,000 megawatt-hours.

Applicant Contact: Andrew Landry, 45 Memorial Circle, PO Box 1058, Augusta, ME 04332, phone: (207) 791–3191, email: *alandry@preti.com.*

FERC Contact: Dr. Nicholas Palso. (202) 502–8854 or *nicholas.palso@ferc.gov.*

Deadline for filing comments, motions to intervene, competing applications (without notices of intent), or notices of intent to file competing applications: 60 days from the issuance of this notice. Competing applications and notices of intent must meet the requirements of 18 CFR 4.36.

The Commission strongly encourages electronic filing. Please file comments, motions to intervene, notices of intent, and competing applications using the Commission's eFiling system at *http://www.ferc.gov/docs-filing/efiling.asp.* Commenters can submit brief comments up to 6,000 characters, without prior registration, using the eComment system at *http://www.ferc.gov/docs-filing/ecomment.asp.* You must include your name and contact information at the end of your comments. For assistance, please contact FERC Online Support at *FERCOnlineSupport@ferc.gov,* (866) 208–3676 (toll free), or (202) 502–8659 (TTY). In lieu of electronic filing, please send a paper copy to: Secretary, Federal Energy Regulatory Commission, 888 First Street NE., Washington, DC 20426. The first page of any filing should include docket number P–13884–002.

More information about this project, including a copy of the application, can be viewed or printed on the ''eLibrary'' link of the Commission's Web site at *http://www.ferc.gov/docs-filing/elibrary.asp.* Enter the docket number (P–13884) in the docket number field to access the document. For assistance, contact FERC Online Support.

Dated: April 1, 2014.

Kimberly D. Bose,

Secretary.

[FR Doc. 2014–07693 Filed 4–4–14; 8:45 am]

BILLING CODE 6717–01–P

DEPARTMENT OF ENERGY

Federal Energy Regulatory Commission

[Project No. 13821–001]

ORPC Alaska 2, LLC; Notice of Preliminary Permit Application Accepted for Filing and Soliciting Comments, Motions To Intervene, and Competing Applications

On March 3, 2014, the ORPC Alaska 2, LLC, filed an application for a successive preliminary permit, pursuant to section 4(f) of the Federal Power Act (FPA), proposing to study the feasibility of the East Foreland Tidal Energy Project (East Foreland project or project) to be located in Cook Inlet near Nikiski in the Kenai Peninsula Borough, Alaska. The sole purpose of a preliminary permit, if issued, is to grant the permit holder priority to file a license application during the permit term. A preliminary permit does not authorize the permit holder to perform any land-disturbing activities or otherwise enter upon lands or waters owned by others without the owners' express permission.

The proposed project would consist of the following: (1) A series of 150-kilowatt TideGen® turbine-generator modules with a combined capacity of no more than 5 megawatts; (2) a 1- to 8-mile-long, 13.5-kilovolt (kV) direct current submarine transmission cable from the module site to an onshore station on the west coast of the Kenai Peninsula; (3) an approximately 0.25-mile-long, 4.16- to 34.5-kV three-phase alternating current terrestrial transmission line connecting the onshore station to a substation site owned by Homer Electric Association; and (4) appurtenant facilities. The estimated annual generation of the East Foreland project would be up to 17.2 gigawatt-hours.

Applicant Contact: Monty Worthington, Director of Project Development, ORPC Alaska 2, LLC, 725 Christensen Drive, Suite A, Anchorage, AK 99501; phone: (907) 388–8639.

FERC Contact: Sean O'Neill; phone: (202) 502–6462.

Deadline for filing comments, motions to intervene, competing applications (without notices of intent), or notices of intent to file competing applications: 60 days from the issuance of this notice. Competing applications and notices of intent must meet the requirements of 18 CFR 4.36.

The Commission strongly encourages electronic filing. Please file comments, motions to intervene, notices of intent, and competing applications using the Commission's eFiling system at *http://www.ferc.gov/docs-filing/efiling.asp.* Commenters can submit brief comments up to 6,000 characters, without prior registration, using the eComment system at *http://www.ferc.gov/docs-filing/ecomment.asp.* You must include your name and contact information at the end of your comments. For assistance, please contact FERC Online Support at *FERCOnlineSupport@ferc.gov,* (866) 208–3676 (toll free), or (202) 502–8659 (TTY). In lieu of electronic filing, please send a paper copy to: Secretary, Federal Energy Regulatory Commission, 888 First Street NE., Washington, DC 20426. The first page of any filing should include docket number P–13821–001.

More information about this project, including a copy of the application, can be viewed or printed on the ''eLibrary'' link of Commission's Web site at *http://www.ferc.gov/docs-filing/elibrary.asp.* Enter the docket number (P–13821) in the docket number field to access the document. For assistance, contact FERC Online Support.

Dated: April 1, 2014.

Kimberly D. Bose,

Secretary.

[FR Doc. 2014–07692 Filed 4–4–14; 8:45 am]

BILLING CODE 6717–01–P

DEPARTMENT OF ENERGY

Western Area Power Administration

Transmission Infrastructure Program

AGENCY: Western Area Power Administration, DOE.

ACTION: Notice of revised program and request for project proposals.

SUMMARY: The Western Area Power Administration (Western) hereby announces its revised Transmission Infrastructure Program (the Program or TIP) and its request for new project proposals. The Program implements Section 402 of the American Recovery and Reinvestment Act of 2009 (Recovery Act) for the purpose of constructing, financing, facilitating, planning, operating, maintaining, or studying construction of new or upgraded electric power transmission lines and related facilities with at least one terminus within Western's service territory, to deliver or facilitate the delivery of power generated by renewable energy resources constructed, or reasonably expected to be constructed, after the date the Recovery Act was enacted. Through the publication of this **Federal Register** notice (FRN or final notice) Western is finalizing revisions to this Program effective and seeks new project proposals from developers and other parties interested in obtaining financing for eligible projects. This final notice adopts and reaffirms the principles that the Program is separate and distinct from Western's power marketing functions, and each eligible project must stand on its own for repayment purposes.

DATES: Revisions to the Program are effective as of May 7, 2014.

FOR FURTHER INFORMATION CONTACT: Please contact Mr. John Kral, Transmission Infrastructure Program, Western Area Power Administration, P.O. Box 281213, Lakewood, CO 80228, telephone (720) 962–7710, email *TIP@wapa.gov.* This FRN is also available on Western's Web site at *http://ww2.wapa.gov/sites/Western/transmission/TIP/Pages/default.aspx.*

SUPPLEMENTARY INFORMATION:

Background

Western markets and transmits wholesale hydroelectric power generated at Federal dams across the western United States. Western's transmission system was developed to deliver Federal hydroelectric power to preference customers. Western owns and operates a transmission system with more than 17,000 circuit-mile, high-voltage lines and also markets power across 15 western states and a 1.3 million square-mile service area. Western's service area encompasses all of the following states: Arizona, California, Colorado, Nebraska, Nevada, New Mexico, North Dakota, South Dakota, Utah, and Wyoming; and parts of Iowa, Kansas, Montana, Minnesota, and Texas. Western markets excess capacity on its transmission system consistent with the policies and procedures outlined in its Open Access Transmission Tariff (OATT) on file with the Federal Energy Regulatory Commission. Western offers nondiscriminatory access to its transmission system, including requests to interconnect new generating resources to its transmission system, under its OATT.

The Program implements Section 402 of the Recovery Act, which amends Section 301 of the Hoover Power Plant Act of 1984. The Program uses the authority granted under these statutes to borrow up to $3.25 billion from the U.S. Department of the Treasury to develop

new or upgraded electric power transmission lines and related facilities, with at least one terminus within Western's service territory, that facilitates the delivery to market of power generated by renewable energy resources constructed or reasonably expected to be constructed. Western sought public comment on the proposed updates to the Program in a 30-day public consultation and comment period as announced in a September 27, 2013, FRN (78 FR 59666). At the request of numerous parties, the comment period was extended for an additional 30 days and closed on November 26, 2013. Western received 48 comments from 43 interested parties and other stakeholders. All comments were reviewed and, where appropriate, incorporated into the Program. The Discussion of Comments section provides Western's response to the comments.

Discussion of Comments

Western received 48 comments related to the proposed, updated Program. To facilitate presentation and discussion of the comments, Western placed the comments into four general categories: (1) Comments on operation and management of the Program; (2) comments on project evaluation and selection; (3) comments on project funding, financing and repayment criteria; and (4) other comments. This section provides Western's response to the comments received. Where possible, comments of a similar nature were consolidated.

1. Comments on Operation and Management of the Program

a. Time and Information Comments

Summary Comment: Western received numerous comments asking that the comment period be extended a second time. Some commenters request that Western meet with them to discuss the Program in more detail before implementing any revisions, and others want Western to provide additional time to elicit comments on what they describe as foundational issues and concerns with TIP.

Response: As referenced above, Western extended the original 30-day comment period an additional 30 days in response to concerns raised by some commenters. Western must balance the need to consider input from stakeholders with the need to implement necessary revisions to the Program in a timely fashion. Western has carefully considered all the comments it received and has incorporated them, as appropriate, into this final notice. Western will not schedule meetings with commenters to discuss the Program at this time, but is committed to continual evaluation of the Program and is open to the possibility of making further adjustments, as appropriate, through an open and transparent public process.

Summary Comment: Prior to the extension of the public comment period, Western received numerous preliminary comments that included a series of questions about the Program.

Response: Western responded to the commenters' questions in writing on November 15, 2013. The responses are posted on Western's Web site at *http://ww2.wapa.gov/sites/western/transmission/tip/Documents/FRN_responses.pdf.* Subsequently, Western extended the comment period an additional 30 days.

Comment: A commenter stated that the final notice should be laid out in a temporal sequence rather than by subject. The commenter also said it made more sense to move the requirement to advance $50,000 when submitting a project application to the beginning of the notice.

Response: By describing the process through an overview of the project life-cycle, Western is informing project applicants of the chronological steps typically encountered during the project development phase. As to moving the application charge to the beginning of the notice, Western added a reference to the Project Proposal section (which appears early in the Project Life-cycle Overview section) notifying applicants of the charge.

Comment: A commenter pointed out that the program-related principles in the September 27, 2013 FRN did not match the program-related principles published in the May 14, 2009 FRN (74 FR 22732).

Response: The variations in the program-related principles in the two FRNs were meant to streamline the text of the principles. There was no intent by Western to alter the program-related principles. Western has re-instated the program-related principles from the May 14, 2009 FRN verbatim with two exceptions, which are identified in the introduction to Section II (Program Principles).

b. Accounting Practices and Standards Comments

Summary Comment: Western received several comments questioning the accounting methods being used by TIP. They include a request to explain what ''appropriate accounting controls'' means and whether TIP accounting principles are different than Western's accounting principles. It was also suggested that Western track project repayment and include it in ''appropriate controls.'' Another comment said the September 27, 2013 FRN lacks specificity regarding financial management issues.

Response: During the implementation of TIP, a stand-alone, separate Treasury Account Funding Symbol (TAFS) was created for TIP's specific use. Western has TAFSs for several functions, including the Colorado River Basins Power Marketing Fund and the Falcon and Amistad Fund. None of Western's TAFSs can be used for purposes outside of their respective appropriation. The same restrictions apply to TIP financial activities. Under the TIP TAFS, Western has established and maintains separate accounting fund codes, project numbers and work orders within its financial management system for all TIP activities and projects. TIP has dedicated staff of three financial personnel (financial manager, accountant and budget analyst) whose responsibilities include the tracking and monitoring of TIP costs and the segregation of TIP's financial transactions from Western's preference power financial transactions and from all other Western transactions. Western's accounting activities, including TIP, follow U.S. Government Standard General Ledger (USSGL) and Generally Accepted Accounting Principles (GAAP). In addition, TIP is subject to annual financial statement audits as well as OMB Circular A123 audit and review (link at *www.whitehouse.gov/omb/circulars a123*) that provide oversight of all finance activities.

Summary Comment: Some commenters asked what accounting methods will be used to ensure TIP and non-TIP ancillary services are segregated?

Response: TIP will use the same accounting methods as the rest of Western in tracking ancillary services. However, TIP ancillary services accounts will be separate and distinct accounts from Western's non-TIP ancillary service accounts.

c. Laws/Rules Comments

Summary Comment: Western received numerous comments that expressed concern over what is perceived as an effort to broaden TIP whereby it now provides assistance to applicants that seek to develop a project, and that such an effort goes beyond what should be Western's primary role in providing loans. Some commenters expressed concern that TIP fundamentally changes Western's core mission; that expanding the Program

may go beyond Congress' intent and Western's organic legislation; that the Program should not impact preference power customers; and that expansion of Western's role could only be done through borrowing from the U.S. Treasury or through advances from preference power customers. One comment said Congress should defund TIP to reduce the Federal debt. Others noted that the September 27, 2013 FRN does not contain any articulation that TIP will not impair Western's primary mission of delivering hydropower to preference customers, that Western is growing its mission at the expense of its preference power customers, and Western should provide a justification for TIP's ''new role.''

Response: Western appreciates these comments. In the course of evaluating projects submitted to TIP and working with project applicants, Western identified that some projects, though viable and possessing promise, were not ready for funding. For example, a project could need further development in the area of obtaining a Western Electricity Coordinating Council (WECC) path rating before it is ready to compete for TIP funding. The May 14, 2009 FRN that established TIP identified that the Program would, among other things, ''participate in the study, facilitation, financing [and] planning . . . of new or upgraded transmission facilities and additions that will help bring renewable energy resources to market across the West.'' As TIP has staff (e.g., a planning engineer) in place for the purpose of evaluating projects, it was deemed efficacious to make them available to developers (at the sole expense of the developer) to provide assistance in areas such as obtaining WECC path ratings. Making TIP staff available in such a manner allows TIP to directly bill developers for services rendered and improves the chances a project may receive funding and fulfill the statutory purpose of Section 402 of the Recovery Act. Previously, TIP used its initial $10 million non-reimbursable Recovery Act appropriation to cover expenses it incurred in reviewing project statements of interest and engaging with applicants. Going forward, project applicants must now fund, through application charges and advance payments, the work that TIP undertakes on a project. This does not change or impair Western's core mission to provide hydropower to its preference customers, nor does it require additional borrowing from the U.S. Treasury. The assurance that Western's preference power customers have not and will not bear the cost for assistance provided by TIP to project applicants can be found in Section 402 of the Recovery Act, TIP's financial records and this final notice. Western's operation of the Program facilitates the construction, financing and planning of new and upgraded transmission lines and the legislation that gave rise to the Program and Western itself. Western does not have the authority to defund the TIP.

Summary Comment: Several commenters noted that TIP is tremendously valuable to the nation, has potential to produce highly beneficial public-private partnerships, and is timely and relevant in the pursuit of competitive power project for renewables in the West. These commenters also noted that project developers, not Western, should be responsible for funding any development efforts related to a TIP project.

Response: Western appreciates this comment.

Summary Comment: Several commenters asked how the May 14, 2009 FRN and the September 2013 FRN relate to one another (i.e., does the September 27, 2013 FRN supersede the May 14, 2009 FRN, amend it, or contain additional program requirements). Commenters said there are discrepancies between the two FRNs, ''fast tracking'' of adjustments, and that changes in the September 27, 2013 FRN may be an effort to hide Western's real intentions. A single FRN that contained all the Program requirements was preferred, and an explanation of the differences between the May 14, 2009 FRN and the September 27, 2013 FRN was requested.

Response: After receiving public comment, Western established the Transmission Infrastructure Program in the May 14, 2009 FRN. As the Program took shape, it became evident to Western that aspects of the Program (e.g., giving applicants more detailed information about submitting a proposal, requiring applicants to pay for Western's evaluation of a proposal, defining more commonly used terms) needed to be updated. The purpose of the September 27, 2013 FRN was to provide notice of proposed TIP updates in a transparent and public manner. Western's interest in proposing the changes in the September 27, 2013 FRN that are being finalized in today's notice is to create a more efficient, self-sustaining program that realizes the statutory goals of Section 402 of the Recovery Act (Section 301 of the Hoover Power Plant Act of 1984)—the upgrading and expansion of the transmission system in the West to deliver or facilitate the delivery of renewable energy resources. Today's final notice contains all Program requirements and includes a section that summarizes the changes among the May 14, 2009 FRN, the September 27, 2013 FRN and this document.

Summary Comment: A commenter states that TIP funding will expire in 2016, before TIP projects can be approved, and project applicants do not have sufficient time to perform required transmission line planning and the ability to contract with generators of renewable power. The commenter posits that without renewable tenants, any new project will not be commercially viable or needed and will become a stranded transmission asset to be repaid by Western's customers.

Response: Section 402 of the Recovery Act, the section of the act that authorizes Western to loan up to $3.25 billion, amends Section 301 of the Hoover Power Plant Act of 1984 (Pub. L. 98–381). Unlike other sections of the Recovery Act (e.g., Section 403, Set-aside for Management and Oversight), Section 402 does not stipulate that funds set aside remain available for obligation until a specific date; therefore, Western considers the borrowing authority made available under Section 402 permanent.

Summary Comment: Western received several comments that the September 27, 2013 FRN appears to have expanded the standard of ''reasonable expectation,'' potentially meaning that the authority could be exercised for a project that is never constructed or does not generate enough revenue to ensure repayment.

Response: No expansion of the ''reasonable expectation'' standard is intended. The reference to projects that are constructed or reasonably expected to be constructed is taken directly from the wording of Section 402 of the Recovery Act. It is possible a project that obtains a loan through Western's borrowing authority may not get built despite the efforts of Western and the DOE Loan Programs Office (LPO) to identify projects that are good candidates for funding. A project that cannot demonstrate a committed source of revenue to ensure repayment of a loan would not be considered a good candidate to receive funding.

Summary Comment: The May 14, 2009 FRN indicates that Western's Administrator must ensure that TIP does not conflict with the responsibilities of the existing transmission system. Western's response to a comment submitted on the May 14, 2009 FRN regarding the Administrator's certification

responsibility to ensure a proposed new project does not conflict with his responsibilities to preference power customers should be added to the September 27, 2013 FRN.

Response: Western notes that today's final notice requires that a project considered by TIP will not adversely impact transmission system reliability or operations, or any other statutory obligations. Those statutory obligations include the Administrator's responsibility to abide by contracts to provide Federal hydropower to Western's preference power customers.

Summary Comment: Whenever there is a reference to operations and maintenance, there should be a reference to ''replacements.''

Response: Western has incorporated a reference to ''replacements'' in this final notice, where appropriate.

Summary Comment: Some commenters noted that the September 27, 2013 FRN did not include language regarding the Administrative Procedure Act's (APA) 30-day delayed effective date provision and questioned whether the Program changes were substantive.

Response: The September 27, 2013 FRN proposing updates to the Program did contain some substantive changes. The delayed effective date provision in Section 553(d) of the APA applies to final notices. Because today's notice finalizes the substantive changes proposed in the September 27, 2013 FRN, the 30-day provision applies to today's final notice.

Comment: A commenter asserts that the TIP application process is now less efficient and more cumbersome than the process outlined in the May 14, 2009 FRN. A single application and cost structure with a quick decision turnaround is recommended.

Response: The submission of a project proposal affords Western the opportunity to provide project applicant a timely decision on whether a project meets the Project Evaluation Criteria, potentially saving the applicant considerable time and expense associated with having to prepare and submit a full Business Plan Proposal that may not meet the criteria. Western will continue to examine ways to expedite the project evaluation process in the interest of making the process less burdensome for applicants.

Comment: A commenter questioned the quarterly intake of project proposals. To help developers stay on schedule with their project development plans, the commenter asked if there was an alternative way to review project proposals.

Response: Western will screen project proposals at a minimum on a quarterly basis, but has revised the final notice so it can also screen proposals at times other than the beginning of each quarter, as necessary.

Comment: A commenter asked that Western remove the 10-page cap on the project proposal so project applicants could provide more detailed information.

Response: Western has removed the 10-page limit on the number of pages in a project proposal.

d. Comments on LPO's Role in TIP

Summary Comment: The DOE LPO should become a backstop when ''reasonable expectations'' of repayment are not achieved.

Response: The DOE LPO will provide services to Western during the project financing phase, but cannot act as a backstop for Western's borrowing authority.

Summary Comment: Western received several comments pointing out LPO's new role. Some commenters said LPO should make the final determination if a project meets the ''reasonable expectation of repayment'' requirement.

Response: LPO will play a material role in determining whether a loan from Western's borrowing authority should be extended to project developers on future TIP projects. Toward that end, the ''reasonable expectation of repayment'' (one of the five statutory evaluation criteria) will receive extensive due diligence and credit review by LPO. The LPO's analysis will be shared with Western's Administrator before a determination is made regarding a project's ability to meet this core statutory requirement.

Comment: A commenter supports moving the evaluation of the loan application function to LPO, believing that leveraging existing DOE staff will keep Program costs down.

Response: Western appreciates the comment.

e. Commingling of Resources Comments

Summary Comment: Western received numerous comments about the commingling of resources. In particular, commenters expressed concern about non-TIP staff being used to conduct TIP work when they should be supporting preference power customers (i.e., that TIP is taking resources away from preference power customers, thereby impacting the ability of Western employees to concentrate on preference power issues). It was noted that a paramount concern of preference customers is that so much staff energy and time will be taken up managing the Program that routine business matters related to serving preference customers will not be met or will be significantly delayed. Others considered the use of non-TIP personnel contrary to TIP's core principle not to interfere with Western's existing obligations. A specific proposal raised by a commenter was to have Western use contractors to supplement the TIP staff when necessary.

Response: Western acknowledges the commenters' concerns. Non-TIP staff has been used sparingly on issues that only relate to TIP, and the TIP Manager, in conjunction with Western regional managers and other supervisors, monitor the involvement of non-TIP staff. Dedicated TIP staff work solely on TIP projects—not preference power issues. The management of TIP is the responsibility of the TIP Manager, who bills all of his/her time to the Program. It is a TIP principle that the Program will not adversely impact system reliability, operations or other statutory obligations, and TIP has not interfered with Western's existing obligations. Western has and will continue to use contractors to work on TIP-exclusive matters when necessary. The use of contractors provides TIP flexibility in scaling up manpower to match increased Program activities while avoiding the need to create a larger, fixed staff.

Summary Comment: Western received numerous comments about project beneficiaries being made to bear the entire cost for TIP and that preference power customers should not cover any TIP (i.e., project development) costs. There was also concern that Western's program direction was picking up some of the costs of TIP's accounting system.

Response: Western acknowledges the commenters' concern that project developers and beneficiaries should pay all TIP-related costs. Western has and will continue to manage the Program separately from its preference power program. Western's protocol for managing the Program in this manner is set forth in this final notice (e.g., developers are responsible for providing advance funding for expenses TIP may incur from the submission of a proposed plan through actual project financing). Western agrees with the principle that project beneficiaries should pay for project costs and included this requirement in the Program principles set forth in the May 14, 2009 FRN, the September 27, 2013 FRN and today's final notice, though it has been refined to require project applicants (not merely beneficiaries) to pay for project-related costs. Costs associated with TIP's accounting system are paid for through the application of the TIP overhead rate

that developers pay and is not funded through Western's preference power program.

2. Comments on Project Evaluation and Selection

Summary Comment: The May 14, 2009 FRN included 11 elements, of which 6 have been removed from the September 27, 2013 FRN. Please clarify.

Response: The evaluation criteria were reduced from 11 to 5 to streamline the evaluation process. The 5 criteria in the September 27, 2013 FRN are directly derived from Section 402 of the Recovery Act.

Summary Comment: How will standards for creditworthiness be established?

Response: TIP will perform due diligence to determine if an applicant possess an adequate level of creditworthiness before deciding whether to further engage with the applicant on a project. TIP will apply generally accepted creditworthiness standards when making this determination.

Comment: One commenter asked how an applicant would integrate the TIP process at different stages of a project.

Response: Western revised the final notice to allow a project developer to submit a Project Proposal and Business Plan Proposal concurrently on a project that is more mature in terms of using Western's borrowing authority. This process will allow for a more expedited review of a project.

Comment: A commenter that previously submitted a Statement of Interest and has a Memorandum of Understanding (MOU) with TIP seeks clarification as to how these revisions would apply; specifically, would such a project have ''grandfathered'' status?

Response: The MOUs previously entered into by TIP required each party to be responsible for their own costs associated with the project. The agreements also permitted either party to terminate the agreement at will. As the updates to the Program require project applicants to provide advance funding to TIP for the evaluation of a project and any development assistance TIP may provide, Western will require existing entities with whom it has entered into an MOU to execute a revised MOU that stipulates the project applicant will provide advance funding for expenses incurred by TIP going forward.

Comment: A commenter notes that the updates to the Program do not address other activities, such as land acquisition. The commenter suggests that upon completion of the project development phase, the project applicant and Western should negotiate a project finance phase agreement that lays out the terms of Western's participation (financial and otherwise) in the project.

Response: In terms of extending Western's borrowing authority, Western will rely on the services and direction provided by the LPO in setting out the financial terms of the lender-borrower relationship. Other terms governing Western's role in a project would be subject to negotiation and Western's determination that it is in the best interest of the agency to participate in the project beyond making a loan.

Comment: After noting that the description of major components in the September 27, 2013 FRN does not contain much detail about exactly how Western will evaluate specific projects, a commenter suggests that Western provide a more complete description of the Program (to include project evaluation) and solicit public comment.

Response: Because no two projects are alike, Western does not provide detailed information in this final notice on how it will evaluate specific projects. The Project Evaluation Criteria set forth in the September 27, 2013 FRN establish the core principles that will guide Western's evaluation process. Those principles will inform Western's review of Project Proposals, Business Plan Proposals, and whether a project is developed to the point that it can proceed to loan underwriting and is eligible to obtain a loan using Western's borrowing authority. Western will, as necessary, work with project applicants in providing additional information about the project evaluation process.

Comment: A commenter notes Western is expecting all aspects of project development to be complete, and that this requirement is too conservative. The commenter asserts that projects deep into development should qualify for TIP funding and Western should hold a public workshop to discuss ''project readiness.''

Response: Western does not expect all projects to be fully developed. As noted in a previous comment, Western has revised this final notice so a project applicant can submit a Project Proposal and Business Plan Proposal concurrently on a project that is more mature, as opposed to submitting only a Project Proposal on a project that is in the early stages of development. Though it is likely a project well into the development phase has achieved or is close to achieving significant milestones (e.g., the issuance of a National Environmental Policy Act (NEPA) record of decision), only fully developed projects that meet Western's Project Evaluation Criteria are eligible for TIP funding. Western does not plan to hold a workshop on project readiness at this time but will consider the request.

Comment: Timeline and milestones associated with the transition from the project development phase to the project financing phase should be clarified. Before committing substantial resources at the project development phase, project applicants need certainty that a project which completes agreed-upon milestones will advance to the project financing phase.

Response: Western acknowledges project applicant's need to have certainty on project milestones. Western anticipates that project applicants will submit projects of varying degrees of maturity to TIP. As such, it is difficult to establish timelines that would apply to every project. There is the expectation, however, that material project milestones such as NEPA records of decision, purchase power agreements, interconnection agreements and other milestones will be achieved when a project transitions from the project development phase to the project financing phase.

Comment: The September 27, 2013 FRN does not address activities beyond the issuance of a loan, such as Western's potential role in land acquisition. Project applicants and Western should negotiate a comprehensive project finance phase agreement that sets forth the full terms of Western's participation in a project rather than simply have an applicant submit a loan application.

Response: Western's potential participation in activities beyond the issuance of a loan is difficult to quantify as any such participation will be project-specific and subject to Western's determination that it is in the agency's best interest. If Western participates in a project beyond providing financing, it would enter into negotiations with a project applicant to establish the terms of Western's participation prior to the applicant's submission of a loan application.

3. Comments on Project Funding, Financing and Repayment Criteria

Summary Comment: Western received several comments concerning the failure of a TIP project during and after construction and how would repayment occur.

Response: Western is mindful of this potential and the possible adverse consequences it could have on the Program. In most cases, long-term purchase power agreements (PPAs) that provide the revenue to repay a TIP loan must be in place before Western would

consider extending its borrowing authority on a project.

Comment: How would an applicant demonstrate repayment of borrowed funds if no PPAs are in place?

Response: This would be difficult to do as PPAs are often tied to the source of transmission revenue required to repay borrowed funds. Section 402 of the Recovery Act mandates that revenue from the use of projects funded under this section shall be the only source of revenue for repayment of the associated loan and to meet the costs of operating and maintaining the new project. Western would review and evaluate the proposed source of revenue from a project to determine whether there is a reasonable expectation of repayment.

Summary Comment: The second Program Principle in the September 27, 2013 FRN appears to have narrowed a project's financial obligation. Western should reinstate the wording that appeared in response to a comment made on the May 14, 2009 FRN that it would use revenues from project beneficiaries as the only source of repayment of all associated project costs.

Response: Program Principle 2, which is directly derived from the Recovery Act, is more succinct and precise than the wording in a response to a comment on the May 14, 2009 FRN. As this principle is a re-statement of the statutory requirement, it does not narrow a project's financial obligation.

Summary Comment: Western must have a plan in place to cover future overhead costs. In addition, whenever there is a reference to Western's costs there should be a reference to ''including overhead.''

Response: TIP has developed an overhead rate that it applies to direct charges for each project developer with which it is engaged, so TIP overhead is already included in TIP costs. The TIP accounting department prepares a budget to cover TIP's anticipated overhead expenses and adjusts the overhead rate accordingly. Due to a favorable outcome on the pre-payment of the loan on a previous TIP project, TIP was able to establish a DOE-approved reserve fund to cover TIP-related expenses if the payment of TIP overhead falls short in a particular year.

Summary Comment: Western received comments questioning why Western is absorbing costs or ''mutually agreeing on an amount'' it will pay on a project as part of an Advance Funding Agreement (AFA), given that TIP's original startup funding has been exhausted.

Response: During discussions leading up to an AFA, the project developer informs TIP of the nature of assistance it seeks. If TIP has the resources available to provide the assistance, the project developer pays for the entire amount of the assistance, including overhead, in advance. There is no negotiation about TIP paying for any assistance it provides and TIP is not absorbing any development costs. The only negotiation that takes place is whether the developer provides advance funding on a monthly or quarterly basis.

Summary Comment: Applicants should repay project costs. The intent of TIP is to provide project financing and Western should not be responsible for funding development efforts related to a TIP project.

Response: Applicants are required to pay—in advance—for any work that TIP performs. TIP personnel do not perform any work unless an applicant deposits a requisite sum of money in a Western U.S. Treasury account. Through the use of AFAs, annual project service charges, and the application of an overhead rate that covers programmatic expenses, TIP is a self-sustaining program. Beginning with the initial application, through the Business Proposal Plan and into the AFA phase, project applicants are responsible for all project-related costs.

Summary Comment: Western should substantially reduce the $50,000 application fee, allow more information in the project proposal, and share the expenses associated with the Project Proposal and the Business Plan Proposal.

Response: TIP must be a self-sustaining program. It does not receive annual appropriations to cover expenses related to the submission and evaluation of Project Proposals and Business Plan Proposals so it is not in a position to share expenses. The application charges are upper estimates of the costs TIP may incur in evaluating these proposals. As set forth in the September 27, 2013 FRN, if TIP's costs are less than the stated charge, TIP will refund any remaining funds or apply them to other charges as directed by the project applicant. Western has reduced the overall cost of the charges it will assess by $50,000.

Summary Comment: Several commenters expressed concern about the misapplication of the ''beneficiary pays'' concept found in Section II.4 of the September 27, 2013 FRN. They suggest shifting from a ''beneficiary pays'' paradigm to a ''cost creator pays'' paradigm. To eliminate any confusion, they request the wording to be changed to read, ''Ensure that Project Applicants repay project costs.''

Response: Western has changed the wording to Section II.4 of this final notice to clarify repayment of project costs.

Summary Comment: Is Western using the original TIP funds to cover overhead expenses or are Project Proposal and Business Plan Proposal charges covering overhead expenses?

Response: The overhead rate is included in the number of hours it charges project applicants for evaluating Project Proposals and Business Plan Proposals.

Comment: A commenter identified that the Recovery Act does not address how repayment of TIP-issued loan would occur if certain circumstances occurred. The commenter listed three potential scenarios: (1) If a project participant declared bankruptcy or could not meet repayment obligations after construction of a project had started; (2) if a project participant failed after construction was completed; and (3) if a project participant wanted or needed to exit a project. The commenter added that there is value in addressing involuntary and voluntary withdrawals of project participants at the front end of project development rather than focusing only on managing fallout from changes later in the project development phase. Finally, the commenter asks whether cost subsidy protections could be developed for Western customers who are not participating in a project.

Response: The Recovery Act does not specifically address potential circumstances associated with repayment. Each project is distinct and it is incumbent on TIP to collaborate with project applicants to conduct risk analysis during the development and financing phases to address potential issues throughout the project life-cycle. TIP staff will conduct analytical reviews of various scenarios that include an examination of offtake, ownership and asset transfer so Western can make determinations on risks and rewards associated with each project. As Western's borrowing authority is not a subsidy-based program, Western does not have the authority to provide cost subsidies to project applicants.

Comment: A commenter noted that Western uses the phrase ''reasonable expectation'' in the September 27, 2013 FRN as the means by which it will determine the relative merit of a proposed project. With this in mind the commenter asks how the ''reasonable expectation'' standard will be developed, implemented and measured; and how an applicant can demonstrate the ability to repay a loan if the applicant does not have signed purchase power agreements at the time Western is making project evaluation decisions.

Response: In the course of evaluating a project at the project proposal and business plan proposal stages and thereafter, Western will employ the ''reasonable expectation of repayment'' standard. The standard requires Western to determine if the proposed plan for repayment of a loan is financially sound and achievable. A project may be better able to meet the standard as it progresses from an initial proposal to a more mature, substantive undertaking. For example, one would not expect a project at the project proposal stage to include PPAs, but it is reasonable to expect that a project in the final stages of development would have signed PPAs in place or be close to executing them. Extensive due diligence by qualified legal, financial and technical experts will be employed to determine if a project meets the ''reasonable expectation of repayment'' standard.

Summary Comment: Several commenters wanted more information about the Program's loan forgiveness clause found in Section 402 of the Recovery Act, as it is unique in the industry. In addition, a commenter notes that TIP cannot be implemented if the final notice does not address the loan forgiveness provision. In addition to pointing out that loans not repaid through a successful project may be forgiven, a commenter asks if monies advanced by an applicant will be folded into a loan and become a reimbursable item and therefore be subject to loan forgiveness; and what the relationship is between the use of funds advanced by an applicant and the forgiveness of costs related to a project that does not get constructed.

Response: The forgiveness clause is required by Section 402 of the Recovery Act. If circumstances give rise to the forgiveness of a loan, Western will implement a loan forgiveness protocol after consulting with DOE. The commenter correctly notes that the Recovery Act allows for loan forgiveness if there is a remaining balance owed at the end of the useful life of a project and funds expended to study projects that are considered but not constructed. The Recovery Act requires Western's Administrator to certify, prior to committing funds to a project, that it is reasonable to expect the project's proceeds will be adequate to repay the loan. Money advanced by an applicant would not become part of a loan and be subject to loan forgiveness. The status of funds advanced by an applicant on a loan that is forgiven would be subject to the terms of the financing agreement executed by the parties.

Comment: A commenter seeks an explanation of how Western derived the amounts of the charges it will assess to project applicants.

Response: Western considered the upper limit of what it might cost to review complex Project Proposals and Business Plan Proposals in arriving at the application charges. Potentially high hourly rates for using technical experts to evaluate proposals was a key component in establishing the amounts.

Comment: A commenter expressed concern that recently added language allowing for ''reasonable'' expectations in Project Evaluation Criteria 1 and 3 will diminish the original intent of the Program to facilitate the delivery of renewable energy with no risk to current Western firm electric service and transmission customers.

Response: The Project Evaluation Criteria listed in this final notice regarding the reasonable expectation that a project facilitates the delivery of renewable energy resources has not changed from the May 14, 2009 FRN. Similarly, the reasonable expectation that a project will generate enough transmission service revenue to repay the loan principle, interest and operating costs by the end of the project's service life also remains the same.

Comment: A commenter suggests it might be appropriate for Western and project applicants to share expenses associated with Project Proposals and Business Plan Proposals if a project demonstrates a benefit to existing and planned Western investments.

Response: Western may consider this suggestion if such a project is proposed. For the time being, Western will look to project applicants to pay for expenses associated with Project Proposals and Business Plan Proposals.

Comment: A commenter asked for more information about the magnitude of costs project applicants are expected to reimburse Western, how costs are calculated, and the mechanics of reimbursement once a project is accepted by TIP.

Response: Project Applicants are required to pay in advance (not as a reimbursement) for any work Western or LPO performs on a project. The charges a project applicant must pay to have Western evaluate a Project Proposal and Business Plan Proposal are set forth in this final notice. If an applicant decides to enter into an AFA with Western, Western will provide rates and related costs associated with work it agrees to perform on a project. The AFA will include mutually agreeable terms governing the mechanics of how the applicant will provide funding to Western.

4. Other Comments

Comment: One commenter recommended Western form a cross-functional stakeholder team (solar industry reps, transmission operators, environmental organizations, etc.) to review proposals for new transmission to serve regions with superior solar energy resources.

Response: Western is open to consulting with industry stakeholders but this recommendation is outside the scope of the Program. TIP is focused on reviewing specific proposals to construct new or upgraded transmission facilities that delver or facilitate the delivery of renewable energy resources.

Comment: A commenter notes the Recovery Act clearly suggests that ancillary service needs of a TIP project could be met by existing federal projects, and that the September 27, 2013 FRN segregates TIP project costs and revenues from other Western project costs/revenues. With this in mind the commenter asks if the term ''Federal power system'' as it appears in the Recovery Act means Western's Desert Southwest Region, or a particular project like the Parker-Davis Project or Boulder Canyon Project? The commenter also asked what accounting procedures and methods will be used to ensure that ancillary service costs are segregated.

Response: The term ''Federal power system'' as used in the Recovery Act refers to all projects within the Western Area Power Administration. A federal power system could conceivably provide ancillary services to a TIP project. No TIP project to date has required ancillary services from a Federal Power System. If a future project requires these services, Western would establish separate and distinct accounts, accounting fund codes and project numbers within its financial management system to segregate ancillary service costs.

Comment: Is the Federal Power System obligated to obtain and deliver ancillary services for TIP projects?

Response: No.

Comment: The final notice should state that revenues collected from ancillary services should be credited to the power system providing the service.

Response: Western has added a statement to this final notice to reflect this.

Comment: A commenter asks whether ''replacements'' should be added to Program Principle 2.b?

Response: The word ''replacements'' has been added to Program Principle 2.b.

Comment: A commenter states that TIP staff have stated that they ''don't

want to be bothered'' responding to inquiries from customers about the proposals set forth in the September 27, 2013 FRN.

Response: Western has no knowledge that its staff has responded in this manner. If the commenter has specific information regarding this alleged statement it should provide that information to Western.

Summary Comment: Western received several comments about the wording in the May 14, 2009 FRN that Western's excess capacity ''needed to serve its preference power customers'' should be reinstated.

Response: The wording at issue appeared in the Supplementary Information: Background section of the May 14, 2009 FRN. The September 27, 2013 FRN did not include the ''needed to serve'' wording and made other minor wording changes (e.g., added ''OATT on file with the Federal Energy Regulatory Commission'') for purposes of making this sentence more technically correct and less awkward. The reference to Western's ''excess capacity on its transmission system'' covers the capacity beyond that needed to serve its preference power customers.

Comment: A commenter encourages Western to include transmission rates established through a robust anchor tenant process (in accordance with FERC orders) as meeting the principle of ''using a public process to set transmission rates.''

Response: Western will take this suggestion under advisement.

Comment: The September 27, 2013 FRN does not adequately address risks to commercial developers or how TIP will protect commercial developers from costs Western incurs in performing its preference power program, nor does the FRN mention TIP's plan to keep overhead rates in check or how it will keep costs attributable to other projects or non-TIP program requirements separate.

Response: Western has acknowledged the concern that project developers and beneficiaries should pay all TIP-related costs, and Western acknowledges the concern that commercial developers should not bear any costs associated with Western's preference power program. Accordingly, Western will continue to manage TIP separately from its preference power program and maintain stand-alone Treasury Account Funding Symbols (TAFS) for TIP's exclusive use. With the knowledge that project applicants are responsible for paying TIP's overhead rate, Western closely monitors its Program expenses.

Comment: A commenter notes that the September 27, 2013 FRN does not address how proprietary commercial data will be protected from Freedom of Information Act requests.

Response: Wording from the May 14, 2009 FRN addressing Western's handling of confidential business information has been incorporated into this final notice in Section III.D.

Comment: A commenter suggests that the final notice include a protocol for resolution of conflicts of interest that may arise when public power interests differ from competitive power project sponsor pursuits.

Response: This suggestion is outside the scope of the Program.

Comment: A commenter notes that commercial developers may value TIP's non-financial development assistance such as federal siting authority for lands or interconnection requests, and the final notice should address the various ways projects originate and develop. The transferability of financing and development assistance should also be addressed.

Response: TIP's main purpose is to provide funding to projects that deliver or facilitate the delivery of renewable energy resources; however, the provision of non-financial development assistance is inextricably linked to the issuance of a loan using Western's borrowing authority. The transferability of financing and development assistance will be considered on a case-by-case basis.

Consolidated Summary of Changes From the May 14, 2009 FRN to the September 27, 2013 FRN, and From the September 27, 2013 FRN to This Final Notice

Pursuant to the request of several commenters, this section identifies how the September 27, 2013 FRN (2013 FRN) and this final notice differ from the May 14, 2009 FRN (2009 FRN) that established the Transmission Infrastructure Program.

The introductory paragraph (''Western's Transmission Infrastructure Program'') in the 2009 FRN, the 2013 FRN and this final notice remains fundamentally the same. This final notice recognizes, however, that many proposed projects when first presented to Western are not mature enough to compete for financing from Western's borrowing authority; accordingly it allows applicants to seek guidance from TIP staff to address areas of concern that may hinder a project's ability to obtain funding.

The Table of Contents in the 2009 FRN was modified when the 2013 FRN was published. The Table of Contents in the 2013 FRN deleted the project-related principles section and added new sections on project life-cycle overview and funding during the project development phase. The only change in the Table of Contents in today's final notice is the addition of sections on Project Development and Operations & Maintenance, and Project Rates and Repayment. These sections, which previously appeared in the 2009 FRN, have been included in this final notice for purposes of having one all-inclusive document that sets forth all the guidelines for the Program. The Definitions section was expanded from the 2009 FRN to the 2013 FRN so interested parties could have more precise information about the content and meaning of frequently used terms. The 2013 FRN and this final notice delete the terms ''Administrator'' and ''Entity'' as those definitions were deemed to be well-understood by the prospective audience. It should be noted that Western has changed the name of ''Statement of Interest'' in the 2013 FRN to ''Project Proposal'' in this final notice, has added a definition of ''Public Interest,'' and deleted the term ''Project Beneficiary.''

The Project-Related Principles set forth in the 2009 FRN were deleted. Principles 1–4 were part of the Project Evaluation Criteria section in the 2009 FRN, so it appeared redundant to include them separately. Project-Related Principles 1–4 appear in the Project Evaluation Criteria of the 2013 FRN and today's final notice.

Project-Related Principle 4 (use of a public process to set rates for any Western transmission capacity that results from the agency's participation in development of a project) in the 2009 FRN was deleted from the 2013 FRN as it is part of Western's reaffirmation to adhere to project rates and repayment policies and practices (see Section VI of the 2013 FRN). Similarly, Project-Related Principles 5 (capability to obtain and deliver ancillary services) and 6 (use proceeds from the sale of transmission to repay principal and interest, ancillary services and operations and maintenance costs) of the 2009 FRN are imbedded in Project Evaluation Criteria 3 and 4, respectively, of the 2013 FRN and this final notice. The Program-Related Principles set forth in the 2009 FRN, 2013 FRN and today's final notice remain the same.

The concepts identified in Section III (Project Funding) of the 2009 FRN appear in Section V (Funding During the Project Development Phase) of the 2013 FRN and today's final notice. Western has added wording to this final notice that appeared in the 2009 FRN regarding how it will isolate TIP

financial accounting transactions in its existing financial management system. The statement in Section III of the 2009 FRN that Western will look for public-private partnerships to maximize the use of its borrowing authority was deleted from the 2013 FRN and this final notice as that concept (i.e., leveraging Western's borrowing authority funding) is captured in the ''Western's Transmission Infrastructure Program'' overview.

The only changes in the Program-Related Principles from the 2009 Notice to this final notice are: (1) ''and related facilities'' has been added to Program Principles 1 and 3 to comport with the wording of the Recovery Act; (2) ''replacements'' has been added to Program Principle 2.b; and (3) ''project beneficiaries'' has been changed to ''Project Applicants'' in Program Principle 4. The Project Evaluation Criteria set forth in the 2009 FRN has been reduced from 11 elements to 5 elements based on Western's determination that the core elements set forth in the Recovery Act should be the means by which a proposal is evaluated. Though Project Evaluation Criteria 5 (potential economic developments of a project) and 6 (priority for projects that satisfy Western's OATT) that appeared in the 2009 FRN are still noteworthy, they are not deemed to rise to the same level of importance as the statutory criteria. Project Evaluation Criteria 8 (technical merits and feasibility of a project), 9 (financial stability and capability of project partners), 10 (project readiness) and 11 (project partners' participation in region-wide transmission planning) that appeared in the 2009 FRN were deleted from the Project Evaluation Criteria in the 2013 FRN and this final notice. Each of these important aspects of a project will nevertheless be reviewed by Western in determining whether an applicant's Business Plan Proposal is financially, technically, commercially and legally viable.

Western has added back the wording that appeared in Section IV.C (Project Evaluation, *Policies and Procedures)* of the 2009 FRN but not the 2013 FRN. These policies and procedures govern the Program's establishment of additional project evaluation criteria, ability to use outside experts in evaluating projects, and how Western will treat confidential information submitted to the Program. For transparency and ease of use, Western has also added back the Project Development and Operations and Maintenance, and Project Rates and Repayment sections that appeared in the 2009 FRN. The Project Development and Operations & Maintenance policies and procedures were revised to clarify that Western will consider proposed projects in accordance with the requirements of its OATT.

Western has modified the charges applicants must pay when they submit Project Proposals and Business Plan Proposals. Under the 2009 FRN, Project Applicants were not required to pay any charge to have Western evaluate a Statement of Interest or any other project-related documents. The 2013 FRN required Project Applicants to pay $50,000 upon submission of a Project Proposal and $250,000 when submitting as Business Plan Proposal. In the interest of accommodating applicants that have well-developed projects and who seek an expedited project review, Western will allow applicants to submit Project Proposals and Business Plan Proposals concurrently. Applicants may now either submit a Project Proposal and Business Plan Proposal at the same time along with a $250,000 payment, or submit $50,000 when presenting a Project Proposal and the remaining balance of $200,000 when presenting a Business Plan Proposal.

The 10 page limit that applied to Statements of Interest (now Project Proposals) in the 2013 FRN has been eliminated.

The 2013 FRN established that Western would screen Project Proposals received during the previous quarter for purposes of determining whether or not each proposed project meets or is reasonably expected to meet the Project Evaluation Criteria. This final notice permits Western to screen Project Proposals at other times if necessary.

Western's Transmission Infrastructure Program

Western's Transmission Infrastructure Program implements Section 402 of the Recovery Act by identifying, prioritizing and participating in the study, facilitation, financing, planning, operating, maintaining and constructing new or upgraded transmission lines and related facilities to bring renewable energy resources to market across the western United States. A main objective of the Program is to encourage non-Federal participation to leverage Western's borrowing authority. Recognizing that most proposed transmission projects are, when first presented to Western, not mature enough to compete for financing through Western's borrowing authority, the Program allows applicants to leverage the expertise of TIP personnel in obtaining guidance on how to develop certain aspects of a project so it can compete more favorably for funding.

The program consists of the components set forth below.

Table of Contents

I. Definitions
II. Program Principles
III. Project Evaluation Criteria
IV. Project Life-Cycle Overview
V. Funding During the Project Development Phase
VI. Project Development and Operations & Maintenance
VII. Project Rates and Repayment
VIII. Request for Submission of New Project Proposals

I. Definitions

Advanced Funding Agreement (AFA): The document that sets forth the terms by which the Project Applicant provides advance funds to Western for development work on an Eligible Project. An AFA is executed after TIP has reviewed and accepted a Project Applicant's Business Plan Proposal.

Business Plan Proposal: The document prepared by the Project Applicant that articulates project development, commercial, and financial plans supported by Financial Model projections. The Business Plan Proposal is a preliminary plan that identifies the conditions precedent required for a Project Applicant to apply for financing. Submitted after Western and the Project Applicant have entered into a Memorandum of Understanding, a Business Plan Proposal is a detailed, comprehensive document that will mature and be revised by the Project Applicant prior to submission of a loan application.

DOE Loan Programs Office (LPO): A program within the Department of Energy. DOE LPO performs underwriting and loan monitoring and administration functions.

Eligible Project: A project that: (1) Facilitates the delivery to market of power generated by renewable energy resources constructed or reasonably expected to be constructed, (2) has one terminus in Western's service territory, (3) can demonstrate a reasonable expectation of repayment, (4) will not adversely impact system reliability or operations, and (5) is in the public interest.

Financial Model: A model that includes a simulation of relevant costs, benefits, values, and risks that will be assessed when making financial decisions affecting a project. Financial Models submitted to TIP must be in Microsoft Excel format and use standard industry conventions or templates provided by Western.

Memorandum of Understanding (MOU): The document that sets forth an understanding between Western and a Project Applicant after Western has approved a Project Applicant's Project Proposal. An MOU precedes the applicant's submission of a Business Plan Proposal.

Project Applicant: Term used to refer to an entity that submits a Project Proposal and Business Plan Proposal.

Project Development Phase: The phase of the project that precedes the Project Finance Phase and construction of the project. The Project Development Phase begins when a Project Applicant submits a Project Proposal and concludes when a Project Applicant submits an application for the use of Western's borrowing authority. The Project Development Phase may include activities associated with facilities studies, Western Electricity Coordinating Council (WECC) path rating, environmental review, design of facilities, obtaining necessary permits, negotiation and execution of commercial agreements, acquisition of external financing, and any other activity that must be completed prior to the submission of a loan application. Project Applicants may request the assistance of Program personnel during this phase.

Project Finance Phase: The Project Finance Phase involves the underwriting, financing, and loan monitoring and servicing for an Eligible Project. With few exceptions, it follows completion of the Project Development Phase. The DOE LPO is responsible for administering the Project Finance Phase.

Project Proposal: The document submitted by a Project Applicant that outlines its proposed project. The first step in the TIP Development Phase, there is no limit on the number of pages for a Project Proposal. A Project Proposal must, at a minimum, include a detailed description of the proposed project (including transmission route information, if applicable, and a preliminary financial model), the proposed role that TIP would play in project development, and sufficient information to demonstrate that the project meets or is reasonably expected to meet Western's Project Evaluation Criteria.

Public Interest: That which generally benefits the public at large. For purposes of determining whether a proposed project is in the ''public interest,'' Western will examine the intent of the Recovery Act, existing transmission infrastructure needs, economic impacts and the environmental impacts.

II. Program Principles

In a May 14, 2009 **Federal Register** notice (FRN), Western identified the principles it would use to provide overarching guidance in implementing its borrowing authority. Application of the Program-related principles ensures, among other things, that the Program is separate and distinct from Western's power marketing functions and that each project stands on its own for loan repayment purposes. Western hereby reaffirms the Program-Related Principles set forth in the May 14, 2009 FRN. For convenience, the Program-Related Principles are set forth below. Consistent with its borrowing authority, Western will ensure the Program:

1. Provides an opportunity, where appropriate, for participation by other entities in constructing, financing, owning, facilitating, planning, operating, maintaining or studying construction of new or upgraded electric power transmission lines and related facilities under this authority.

2. Uses revenues from projects developed under this authority as the only source of revenue for,

a. Repayment of the associated loan for the project;

b. payment of expenses for ancillary services, and operation and maintenance and replacements; and

c. payments for ancillary services that will be credited to the existing power system providing these services, when the existing Federal power system is the source of the ancillary services.

3. Maintain appropriate controls to ensure, for accounting and repayment purposes, each transmission line and related facility project in which Western participates under this authority is treated separate and distinct from:

a. Each other such project; and

b. all other Western power and transmission facilities.

4. Ensure that Project Applicants repay project costs.

III. Project Evaluation Criteria

1. Consistent with the requirements set forth in the Recovery Act, Western will evaluate projects based on the following criteria:

a. Facilitates the delivery to market of power generated by renewable resources constructed or reasonably expected to be constructed.

b. has at least one terminus within Western's service territory.

c. establishes the reasonable expectation that the project will generate enough transmission service revenue to repay the principle investment, all operating costs including overhead, and accrued interest by the end of the project's service life.

d. will not adversely impact system reliability or operations, or other statutory obligations.

e. is in the public interest.

2. Western will establish additional criteria to evaluate proposed projects as necessary.

3. Western may, at its discretion, use outside experts to assist in evaluating proposed project seeking funding under this authority. Western will use its current acquisition practices to retain any contractors to assist in project evaluation and will use the specific regulations in the Federal Acquisition Regulation to address any organizational conflicts of interest.

4. Western will treat data submitted by project participants related to this authority, including project descriptions, participation and financing arrangements by other parties, as available to the public consistent with the Freedom of Information Act (FOIA) (5 U.S.C. 552 et seq.) and DOE's implementing regulations at 10 CFR Part 1004. Participants may request confidential treatment of all or part of a submitted document under FOIA's exemption for ''Confidential Business Information'' and must mark the material as confidential. Materials so designated and which meet the criteria stipulated in the FOIA and DOE's implementing regulations will be treated as exempt from FOIA inquiries.

IV. Project Life-Cycle Overview

The majority of Eligible Projects will require some project development (e.g., environmental permitting, establishment of WECC path rating, and technical design work) before a loan can be issued using Western's borrowing authority. With this in mind, Western's involvement in each project is divided into two general phases—the Project Development Phase and the Project Finance Phase. Though there may be exceptions (e.g., a project that is fully developed and ready to submit a complete and comprehensive application to obtain funding through the use of Western's borrowing authority), the expectation is that each project will need some additional work before it completes the Project Development Phase and the underwriting and execution stages of the Project Finance Phase before it receives funding under the borrowing authority. Projects that receive funding under the borrowing authority enter a loan monitoring stage for the life of the loan (i.e., until all payments and other amounts due have been repaid).

1. Project Development Phase

The Project Development Phase involves the origination and development work for a potential project. This phase is divided into three parts: (1) Project introduction, which involves the initial intake and evaluation of a Project Proposal; (2) project initiation, which involves the development of a more substantial business proposal and initiation of due diligence for each project that advances beyond a Project Proposal; and (3) project development, which involves a review of the proposed baseline project plan and budget as well as the development of major project decision milestones for each project that advances beyond the business proposal stage. The elements of the Project Development Phase and relevant procedures are explained below.

a. Project Proposal

The review process begins when a Project Applicant submits a Project Proposal. Western will post instructions on submitting Project Proposals on its Web site. In the interest of accommodating applicants that have well-developed projects and who seek an expedited project review, Western will allow applicants to submit a Project Proposal and Business Plan Proposal concurrently. Applicants will be required to pay Western a minimum of $50,000 upon the submission of a Project Proposal to cover the costs associated with Western's review of the proposal. For more information on specific charges, refer to Section V (Funding During the Project Development Phase) of this final notice.

Project Proposals can be submitted anytime at the Program Web site using the *http://ww2.wapa.gov/sites/Western/transmission/TIP/Pages/default.aspx* link.

Then, on or about the beginning of each quarter (approximately January 1, April 1, July 1, and October 1), Western will screen Project Proposals received during the previous quarter for purposes of determining whether or not each proposed project meets or is reasonably expected to meet the Project Evaluation Criteria (see Section III above). Western may, however, decide to screen Project Proposals at times other than the beginning of each quarter, as necessary. Western may contact Project Applicants for clarifications during the review period, but will not engage in material discussions about a Project Proposal. Western will make its determination no later than 30 business days after reviewing a proposal.

If Western determines that a Project Proposal does not or is not expected to meet all of the Project Evaluation Criteria, it will inform the Project Applicant in writing of the proposal's deficiencies, return unused funds, and take no further action on the proposal. Project Applicants who submit a Project Proposal that does not comport with the Project Evaluation Criteria will be invited to submit a revised Project Proposal. If Western determines that a Project Proposal meets the Project Evaluation Criteria, the proposed project will be deemed an Eligible Project and will be assigned to the development queue, and the Project Applicant will be offered the opportunity to enter into an MOU with Western. Because projects will possess varying degrees of maturity, a project may remain in the development queue until Western—after engaging in discussions with the Project Applicant—determines that the project is sufficiently developed to proceed to the Business Plan Proposal stage.

The Project Applicant is responsible for the costs associated with Western's review of a Project Proposal. Those costs are addressed in Section V below.

b. Memorandum of Understanding (MOU)

Project Applicants who submit a Project Proposal that meets or is reasonably expected to meet the Project Evaluation Criteria will be offered the opportunity to enter into an MOU with Western. The MOU is a document that, among other things, establishes the relationship among the parties, funding obligations for the submission of a Business Plan Proposal, confidentiality provisions, and the making of public statements regarding a project. The execution of an MOU does not imply that Western has approved a project for use of Western's borrowing authority. It does, however, represent Western's intent to move forward with its review and evaluation of the project for purposes of determining whether or not to participate in project development activities. Upon entering into an MOU, either party may terminate the document for any reason. Western will post a model MOU on its Web site. A Project Applicant may take up to six months to enter into an MOU with Western after receiving confirmation that its Project Proposal meets all the established evaluation criteria.

c. Business Plan Proposal

The Business Plan Proposal explains a project's development, commercial, and financial plans supported by Financial Model projections. A Business Plan Proposal is a preliminary plan that may lead to the determination that a project is financially, technically, commercially, and legally viable and thus, appropriate to proceed on to development. A Business Plan Proposal also addresses anticipated conditions precedent that a commercial lender would require in a loan application. It is expected that a Business Plan Proposal submitted for development assistance will mature and be revised by the Project Applicant prior to submission of a loan application.

At a minimum, it is expected that a Business Plan Proposal will include the following information:

- A comprehensive project description that includes the history of the project to date.
- The names of all investors, partners, joint ventures, and other entities with a financial or legal interest in the proposed project.
- The status of all efforts to obtain project funding from other sources.
- Information to assess the financial viability of the proposed project, including audited financial statements and reports of the Project Applicant and any other investors in the project and detailed Financial Models.
- The Project Applicant's recent and relevant experience in developing projects of similar size and scope.
- A plan for how the Project Applicant expects to generate revenue from the project to:

(1) Repay principal and interest associated with a loan from Western's borrowing authority, and

(2) pay for project-related ancillary services and operations and maintenance and replacement expenses.

- A detailed analysis of any impact that the proposed project may have on the reliability of the integrated electrical grid.
- An explanation of how the project will obtain and deliver generation-related ancillary services (if appropriate).
- An independent analysis of any new technologies to be employed as part of the project.
- All known material economic, legal, and other risks that may have an effect on the project.
- A listing of all TIP development-related guidance that the Project Applicant seeks to obtain.
- Relevant information concerning required approvals, permits, licenses, land rights, and other permissions that must be obtained on behalf of the project.
- Detailed project technical specifications and designs.
- Required interconnections and path ratings.

At the Project Applicant's expense, Western will perform a project evaluation and due diligence review of a Business Plan Proposal to determine if the proposal is deficient in these or any other material respects, and will offer, in writing, to work with the Project Applicant to remedy any deficiencies. When Western determines that the Business Plan Proposal adequately addresses all technical, commercial, and financial aspects of a proposed project, it will invite the Project Applicant to enter into an Advance Funding Agreement (AFA).

A Project Applicant may take up to 12 months to submit a Business Plan Proposal after signing an MOU with Western. Due to the varying nature and complexity of Business Plan Proposals, Western will not establish a firm fixed time frame for reviewing such documents but will endeavor to complete its review expeditiously while keeping the Project Applicant apprised of its progress.

The Project Applicant is responsible for the costs associated with Western's review of a Business Plan Proposal. Those costs are addressed in Section V below.

d. Advance Funding Agreement

An AFA is an agreement that sets forth the terms under which Western will participate in the development of a project. The terms of an AFA call upon a Project Applicant to advance a mutually-agreed amount to cover costs Western incurs in performing project development activities as set forth in the document. No work will commence without receipt of advance payment. The AFA also provides that if there are insufficient funds to cover Western's project-related development expenses, Western will inform the Project Applicant of the insufficiency and request additional funding. TIP will post a model AFA on its Web site.

e. Project Development

Once an AFA is executed, the parties begin to perform project development-related activities. These activities often include facilities studies and designs; establishment of a WECC path rating; environmental, cultural, endangered species, and other assessments; negotiation and execution of commercial agreements; analysis of options for external financing for construction; negotiation of the project ownership structure; any needed interconnection agreements; and Western's continued performance of due diligence as it relates to the project and any other activity that must be completed prior to the start of construction. Depending on the nature of the project and the amount of development that has already occurred, the Project Development Phase is likely to vary in length from less than a year to several years.

2. Transition From Project Development Phase to Project Finance Phase

Western, in consultation with LPO, will determine when a project has completed the Project Development Phase and will coordinate with LPO regarding the transition of a project from the Project Development Phase to the Project Finance Phase.

3. Project Finance Phase

The Project Finance Phase involves the underwriting, financing, and loan monitoring and servicing for a project. This phase can generally be divided into three parts: (1) Project underwriting, which involves submission by an applicant of a completed loan application and business plan, the completion of extensive due diligence and financial modeling by LPO and its advisors, and negotiation of a term sheet and conditional commitment containing the material business and legal terms of a possible financing transaction; (2) for any project that proceeds beyond underwriting, project execution, which involves the negotiation and documentation of definitive loan documents and any other agreements and instruments required for the financing of the project, as well as the closing of such financing; and (3) for any project that achieves execution, project implementation, which involves the actual implementation and funding disbursements in accordance with the loan documents as well as loan servicing and monitoring activities.

V. Funding During the Project Development Phase

1. Policies and Procedures

a. Accounting Principles

Western will use generally accepted accounting principles and practices in recording and tracking all expenses and revenue transactions for each project. Western will isolate TIP financial accounting transactions in its existing financial management system.

b. Program Funding

The Program must be financially self-sustaining. As such, expenses incurred by Western in reviewing Project Proposals and evaluating Business Plan Proposals must be borne by Project Applicants. Similarly, Project Applicants must provide adequate advance funding for services performed by Program personnel or contractors during the Project Development Phase.

c. Allocation of Expenses—Project Proposal and Business Plan Proposal

i. Western's estimates that it can cost up to $50,000 to review and screen a Project Proposal and $200,000 to review a Business Plan Proposal. Accordingly, Western will require Project Applicants who concurrently submit a Project Proposal and Business Plan Proposal to make a one-time payment of $250,000 to cover anticipated expenses. In the alternative, Project Applicants who desire to initially submit only a Project Proposal will be required to make a payment of $50,000 to the Program, with the expectation that a $200,000 payment will be submitted along with a Business Plan Proposal. Project Applicants who anticipate submitting a project should have adequate financial resources on-hand to cover these expenses. Project Applicants should contact the TIP office to make arrangements for this payment. Failure to make the appropriate payment will result in Western taking no action to review a Project Proposal and/or a Business Plan Proposal. A Project Applicant may elect to apply funds remaining (if any) from its $50,000 Project Proposal payment that are in Western's control to the $200,000 Business Plan Proposal charge.

ii. If, in the course of reviewing a Project Proposal or Business Plan Proposal, Western determines that there are insufficient funds to cover its expenses, Western will promptly inform the Project Applicant of the insufficiency and request adequate additional funding to complete its review. In addition, if Western determines during the review of a Project Proposal that a project does not meet or is reasonably expected not to meet all of the Project Evaluation Criteria, Western will so notify the applicant and return any funds in excess of actual costs incurred by Western in reviewing the proposal to the applicant. In a similar fashion, if Western determines that a Business Plan Proposal is not financially, technically, and commercially viable, it will notify the Project Applicant and return any funds paid by the Project Applicant in excess of actual costs incurred by Western in evaluating the proposal.

d. Allocation of Expenses—AFA

As part of the AFA, Western and the Project Applicant will mutually agree on an amount to cover costs associated with project development activities performed by Western. The Project Applicant may elect to apply funds

remaining (if any) from previous payments that are in Western's control to the mutually agreed upon amount.

VI. Project Development, Operations & Maintenance

1. Project Development and Operations & Maintenance

a. Applicability

All projects funded under this authority.

2. Policies and Practices

a. For study, facility development, construction and other related purposes, Western will consider projects constructed under its authority under Section 402 of the Recovery Act in accordance with procedures and requirements for arranging for transmission service or interconnection under its OATT, or related interconnection agreements. Western will, as necessary, use appropriate project management methods for all transmission projects approved for funding under this authority.

b. Available transfer capability surplus to Western's needs will be made available in a nondiscriminatory manner consistent with FERC open access transmission rules, Federal statutes, and Western policies.

c. Western will comply with all other applicable Federal laws, regulations and policies, including National Environmental Policy Act of 1969, Federal Acquisition Regulation, and other applicable provisions of the Recovery Act.

VII. Project Rates and Repayment

1. Applicability

a. All projects funded under this authority.

2. Policies and Practices

a. The repayment requirements and applicable transmission rates will be designed so that proceeds from a project meet the repayment obligation.

b. Before project development, Western will confirm the reasonable likelihood that the project will generate enough transmission service revenue to meet Western's financial repayment obligations including principal investment, operating costs including overhead, accrued interest, and other appropriate costs.

c. Transmission rates for transmission capacity controlled by Western will be developed in a public process following applicable requirements outlined in 10 CFR part 903 and RA6120.2, and set by the Administrator as specified in relevant DOE orders.

VIII. Request for Submission of New Project Proposals

With the revised Program now in place, TIP encourages interested parties to submit Project Proposals to construct, finance, facilitate, plan, operate, maintain, or study construction of new or upgraded electric power transmission lines and related facilities with at least one terminus within Western's service territory, that deliver or facilitate the delivery of power generated by renewable energy resources. On or about the beginning of each quarter (approximately January 1, April 1, July 1, and October 1) or, if necessary, at other times. Western will screen Project Proposals received during the previous quarter for purposes of determining whether or not each proposed project meets or is reasonably expected to meet the Project Evaluation Criteria (see Section III, above). Western will make its determination no later than 30 business days after reviewing a Project Proposal and promptly notify the Project Applicant in writing.

Environmental Compliance

In compliance with the National Environmental Policy Act of 1969 (NEPA) (42 U.S.C. 4321, et seq.), the Council on Environmental Quality Regulations for implementing NEPA (40 CFR parts 1500–1508), and the DOE NEPA Implementing Procedures and Guidelines (10 CFR part 1021), Western has determined that this action fits within category A13, Procedural Documents, of Appendix A to Subpart D of Part 1021 and is categorically excluded from NEPA analysis. Future actions under this authority will undergo appropriate NEPA analysis.

Dated: February 20, 2014.

Mark A. Gabriel,

Administrator.

[FR Doc. 2014–07700 Filed 4–4–14; 8:45 am]

BILLING CODE 6450–01–P

ENVIRONMENTAL PROTECTION AGENCY

[EPA–HQ–OAR–2013–0263; FRL–9909–15–OAR]

Protection of Stratospheric Ozone: Notice of Data Availability Regarding Aggregate HCFC–22 Inventory Data From 2008–2013

AGENCY: Environmental Protection Agency (EPA).

ACTION: Notice of Availability.

SUMMARY: Today's notice announces the availability of two additional documents related to *Protection of Stratospheric Ozone: Adjustments to the Allowance System for Controlling HCFC Production, Import and Export (2015–2019).* The first document shows the aggregated results of Clean Air Act section 114 requests for information on the amount of HCFC–22 inventory held by nine entities between 2008 and 2013. The second is an updated draft of the *2013 Servicing Tail Report,* which revises statements regarding alternatives to HCFC–123 for fire suppression and modeled need for virgin HCFC–123 for this purpose.

DATES: Comments on this notice of data availability must be received on or before April 22, 2014.

ADDRESSES: Submit your comments, identified by Docket ID No. EPA–HQ–OAR–2013–0263, by one of the following methods:

- *www.regulations.gov*: Follow the online instructions for submitting comments.
- Email: *a-and-r-docket@epa.gov*.
- Mail: Docket #EPA–HQ–OAR–2013–0263, Air and Radiation Docket and Information Center, United States Environmental Protection Agency, Mail code: 6102T, 1200 Pennsylvania Avenue NW., Washington, DC 20460.
- Hand Delivery: Docket #EPA–HQ–OAR–2013–0263 Air and Radiation Docket at EPA West, 1301 Constitution Avenue NW., Room 3340, Mail Code 6102T, Washington, DC 20004. Such deliveries are only accepted during the Docket's normal hours of operation, and special arrangements should be made for deliveries of boxed information.

Instructions: Direct your comments to Docket ID No. EPA–HQ–OAR–2013–0263. EPA's policy is that all comments received will be included in the public docket without change and may be made available online at *www.regulations.gov*, including any personal information provided, unless the comment includes information claimed to be Confidential Business Information (CBI) or other information whose disclosure is restricted by statute. Do not submit information that you consider to be CBI or otherwise protected through *www.regulations.gov* or email. If you want to submit confidential comments, please send them to the individual listed in the **FOR FURTHER INFORMATION CONTACT** section. The *www.regulations.gov* Web site is an ''anonymous access'' system, which means EPA will not know your identity or contact information unless you provide it in the body of your comment. If you send an email comment directly to EPA without going through *www.regulations.gov*, your email address will be automatically captured

and included as part of the comment that is placed in the public docket and made available on the Internet. If you submit an electronic comment, EPA recommends that you include your name and other contact information in the body of your comment and with any disk or CD–ROM you submit. If EPA cannot read your comment due to technical difficulties and cannot contact you for clarification, EPA may not be able to consider your comment. Electronic files should avoid the use of special characters, any form of encryption, and be free of any defects or viruses. For additional information about EPA's public docket, visit the EPA Docket Center homepage at *www.epa.gov/epahome/dockets.htm*.

FOR FURTHER INFORMATION CONTACT: Elizabeth Whiteley by telephone at (202) 343–9310 or by email at *whiteley.elizabeth@epa.gov*, or by mail at United States Environmental Protection Agency, Stratospheric Protection Division (6205J), 1200 Pennsylvania Ave. NW., Washington DC 20460. You may also visit the Ozone Protection Web site of EPA's Stratospheric Protection Division at *www.epa.gov/ozone/strathome.html* for further information about EPA's Stratospheric Ozone Protection regulations, the science of ozone layer depletion, and related topics.

SUPPLEMENTARY INFORMATION:

I. General Information

A. Does this action apply to me?

This notice announces the availability of data relevant to the proposed rule titled, *Protection of Stratospheric Ozone: Adjustments to the Allowance System for Controlling HCFC Production, Import and Export,* which published in the **Federal Register** on December 24, 2013, and covers the years 2015–2019. When final, that rule may affect the following categories, thus this notice of availability may be of interest to:

- Industrial Gas Manufacturing entities (NAICS code 325120), including fluorinated hydrocarbon gases manufacturers and reclaimers;
- Other Chemical and Allied Products Merchant Wholesalers (NAICS code 422690), including chemical gases and compressed gases merchant wholesalers;
- Air-Conditioning and Warm Air Heating Equipment and Commercial and Industrial Refrigeration Equipment Manufacturing entities (NAICS code 333415), including air-conditioning equipment and commercial and industrial refrigeration equipment manufacturers;
- Air-Conditioning Equipment and Supplies Merchant Wholesalers (NAICS code 423730), including air-conditioning (condensing unit, compressors) merchant wholesalers;
- Electrical and Electronic Appliance, Television, and Radio Set Merchant Wholesalers (NAICS code 423620), including air-conditioning (room units) merchant wholesalers;
- Plumbing, Heating, and Air-Conditioning Contractors (NAICS code 238220), including central air-conditioning system, commercial refrigeration installation and HVAC contractors; and
- Refrigerant reclaimers, manufacturers of recovery/recycling equipment, and refrigerant recovery/recycling equipment testing organizations.

This list is not intended to be exhaustive, but rather provides a guide for readers regarding entities likely to be interested in this notice.

B. What should I consider as I prepare my comments for EPA?

1. Confidential Business Information (CBI)

Do not submit this information to EPA through *www.regulations.gov* or email. Clearly mark the part or all of the information that you claim to be CBI. For CBI information in a disk or CD ROM that you mail to EPA, mark the outside of the disk or CD ROM as CBI and then identify electronically within the disk or CD ROM the specific information that is claimed as CBI. In addition to one complete version of the comment that includes information claimed as CBI, a copy of the comment that does not contain the information claimed as CBI must be submitted for inclusion in the public docket. Information so marked will not be disclosed except in accordance with procedures set forth in 40 CFR Part 2.

2. Tips for Preparing Your Comments

When submitting comments, remember to:

- Identify the rulemaking by docket number and other identifying information (subject heading, **Federal Register** date and page number).
- Follow directions—The agency may ask you to respond to specific questions or organize comments by referencing a Code of Federal Regulations (CFR) part or section number.
- Explain why you agree or disagree, suggest alternatives, and substitute language for your requested changes.
- Describe any assumptions and provide any technical information and/or data that you used.
- If you estimate potential costs or burdens, explain how you arrived at your estimate in sufficient detail to allow for it to be reproduced.
- Provide specific examples to illustrate your concerns, and suggest alternatives.
- Explain your views as clearly as possible, avoiding the use of profanity or personal threats.
- Make sure to submit your comments by the comment period deadline identified.

II. What data are available?

EPA is announcing the availability of two documents in docket EPA–HQ–OAR–2013–0263, which is the docket for the rulemaking titled, *Protection of Stratospheric Ozone: Adjustments to the Allowance System for Controlling HCFC Production, Import and Export (2015–2019).* EPA intends to consider comments on this data as it develops the rule finalizing the December 24, 2013 proposal (78 FR 78072).

The first of those documents is *2008–2013 HCFC–22 Aggregate Inventory Data.* In August 2013, under the authority of Clean Air Act section 114, the Environmental Protection Agency (EPA) sent letters to nine major entities in the HCFC–22 market, including producers, importers, distributors and reclaimers of HCFC–22. The agency asked for each company's HCFC–22 inventory as of December 31 in the years 2008 through 2012. At least one respondent to EPA's section 114 request claimed the aggregate calendar-year HCFC–22 inventory data from all nine entities as confidential business information; therefore, EPA was obligated to follow its Confidential Business Information regulations at 40 CFR Part 2 Subpart B with respect to the aggregate data and could not release those data at the time of the agency's proposed rule for the allocation of 2015–2019 HCFC allowances (December 24, 2013, 78 FR 78072). On February 18, 2014, EPA issued a final determination that the aggregate inventory data is not entitled to confidential treatment. EPA sent a second letter under the authority of section 114 of the Clean Air Act to the same nine entities on February 27, 2014, requesting each company's HCFC–22 inventory as of December 31, 2013. No company claimed the aggregate inventory data for 2013 as confidential business information.

EPA posted the 2008–2012 aggregate inventory data on the agency's Web site at *http://www.epa.gov/ozone/title6/phaseout/classtwo.html* and notified stakeholders via email on March 10, 2014. EPA posted the 2013 aggregate inventory data on the agency's Web site

and notified stakeholders via email on March 27, 2014. EPA also added these two sets of data to the docket on March 14, 2014 and with this notice, respectively. Given that EPA has already made these data available through other means, including direct notice to stakeholders, EPA believes that 15 days is an adequate period for public comment on this notice.

In preparing its proposed rule, EPA considered the annual trend of HCFC–22 inventory amounts, and the existing inventory at the end of 2012. Existing HCFC–22 inventory can be used to meet a portion of servicing demand, thus enabling the agency to issue fewer HCFC–22 consumption allowances and prevent additional emissions of ozone-depleting HCFC–22. As noted in the proposed rule, the inventory data collected through EPA's August 2013 letters indicated that HCFC–22 inventory was higher than the agency's previous estimate of 22,700 to 45,400 MT. EPA also noted that several stakeholders expected inventory to rise in 2013 and 2014. While the nine entities do not hold the complete inventory of HCFC–22, discussions with stakeholders both before and after the rule was proposed indicate that the aggregate inventory from these nine entities likely constitutes a significant majority of the HCFC–22 in inventory on the specified dates.

The agency is also announcing revisions to the *2013 Servicing Tail Report,* also available in the docket. These changes revise statements regarding alternatives to HCFC–123 for fire suppression and modeled need for virgin HCFC–123 for this purpose.

Dated: March 31, 2014.

Sarah Dunham,

Director, Office of Atmospheric Programs.

[FR Doc. 2014–07718 Filed 4–4–14; 8:45 am]

BILLING CODE 6560–50–P

EXPORT-IMPORT BANK OF THE UNITED STATES

[Public Notice 2014–6004]

Agency Information Collection Activities; Proposals Submissions, and Approvals

AGENCY: Export-Import Bank of the United States.

ACTION: Submission for OMB review and comments request.

Form Title: EIB 92–79 Broker Registration Form.

SUMMARY: The Export-Import Bank of the United States (Ex-Im Bank), as a part of its continuing effort to reduce paperwork and respondent burden, invites the general public and other Federal Agencies to comment on the proposed information collection, as required by the Paperwork Reduction Act of 1995. Our customers will be able to submit this form on paper or electronically. This form is used by insurance brokers to register with Export-Import Bank. It provides Export-Import Bank staff with the information necessary to make a determination of the eligibility of the broker to receive commission payments under Export-Import Bank's credit insurance programs.

Form can be viewed at *http://www.exim.gov/pub/pending/eib92–79.pdf.*

DATES: Comments must be received on or before May 7, 2014 to be assured of consideration.

ADDRESSES: Comments may be submitted electronically on *WWW.REGULATIONS.GOV* or by mail to Office of Information and Regulatory Affairs, 725 17th Street NW., Washington, DC 20038 Attn: OMB 3048–0024.

SUPPLEMENTARY INFORMATION:

Title and Form Number: EIB 92–27 Broker Registration Form.

OMB Number: 3048–0024.

Type of Review: Regular.

Need and Use: This form is used by insurance brokers to register with Export Import Bank. The form provides Export Import Bank staff with the information necessary to make a determination of the eligibility of the broker to receive commission payments under Export Import Bank's credit insurance programs.

Affected Public: This form affects entities engaged in brokering export credit insurance policies.

Annual Number of Respondents: 50.

Estimated Time per Respondent: 15 minutes.

Government Review Time per Response: 2 hours.

Frequency of Reporting or Use: Once every three years.

Government Reviewing Time per Year: 100 hours.

Average Wages per Hour: $42.50.

Average Cost per Year: $4,250.

Benefits and Overhead: 20%.

Total Government Cost: $5,100.

Bonita Jones,

Program Analyst, Records Management Divison.

[FR Doc. 2014–07720 Filed 4–4–14; 8:45 am]

BILLING CODE 6690–01–P

EXPORT-IMPORT BANK OF THE UNITED STATES

[Public Notice 2014–3006]

Agency Information Collection Activities; Proposals Submissions, and Approvals

AGENCY: Export-Import Bank of the United States.

ACTION: Submission for OMB review and comments request.

Form Title: EIB 95–09 Letter of Interest Application.

SUMMARY: The Export-Import Banks of the United States (Ex-Im Bank), as part of its continuing effort to reduce paperwork and respondent burden, invites the general public and other Federal Agencies to comment on the proposed information collection, as required by the Paperwork Reduction Act of 1995.

The Letter of Interest (LI) is an indication of Export-Import (Ex-Im) Bank's willingness to consider financing a given export transaction. Ex-Im Bank uses the requested information to determine the applicability of the proposed export transaction and determines whether or not to consider financing that transaction.

One question (appearing as number 1 in the previous version) from Attachment A has been removed in this updated version of the form, since it is no longer relevant.

The form can be reviewed at: *http://www.exim.gov/pub/pending/95–9-li-1.pdf.*

DATES: Comments must be received on or before May 7, 2014 to be assured of consideration.

ADDRESSES: Comments may be submitted electronically on *WWW.REGULATIONS.GOV* or by mail to Office of Information and Regulatory Affairs, 725 17th Street NW., Washington, DC 20038. Attn: 3048–0005.

SUPPLEMENTARY INFORMATION:

Title and Form Number: EIB 95–09 Letter of Interest Application.

OMB Number: 3048–0005.

Type of Review: Regular.

Need and Use: The Letter of Interest (LI) is an indication of Export-Import (Ex-Im) Bank's willingness to consider financing a given export transaction. Ex-Im Bank uses the requested information to determine the applicability of the proposed export transaction system prompts and determines whether or not to consider financing that transaction.

Affected Public: This form affects entities involved in the export of U.S. goods and services.

Annual Number of Respondents: 540.
Estimated Time per Respondent: 0.5 hours.
Annual Burden Hours: 270.
Frequency of Reporting of Use: On occasion.
Government Reviewing Time per Year: 270.
Average Wages per Hour: $42.50.
Average Cost per Year: $11,475.
Benefits and Overhead: 20%.
Total Government Cost: $13,770.

Bonita Jones,

Program Analyst, Records Management Division.

[FR Doc. 2014–07712 Filed 4–4–14; 8:45 am]

BILLING CODE 6690–01–P

EXPORT-IMPORT BANK OF THE UNITED STATES

[Public Notice 2014–3003]

Agency Information Collection Activities: Comment Request

AGENCY: Export-Import Bank of the United States.

ACTION: Submission for OMB review and comments request.

Form Title: EIB 10–05 Notice of Claim and Proof of Loss, Medium Term Guarantee.

SUMMARY: The Export-Import Bank of the United States (Ex-Im Bank), as part of its continuing effort to reduce paperwork and respondent burden, invites the general public and other Federal Agencies to comment on the proposed information collection, as required by the Paperwork Reduction Act of 1995.

Pursuant to the Export-Import Bank Act of 1945, as amended (12 U.S.C. 635, *et seq.*), the Export-Import Bank of the United States (Ex-Im Bank), facilitates the finance of the export of U.S. goods and services by providing insurance or guarantees to U.S. exporters or lenders financing U.S. exports. By neutralizing the effect of export credit insurance or guarantees offered by foreign governments and by absorbing credit risks that the private sector will not accept, Ex-Im Bank enables U.S. exporters to compete fairly in foreign markets on the basis of price and product. In the event that a borrower defaults on a transaction insured or guaranteed by Ex-Im Bank, the insured or guaranteed exporter or lender may seek payment from Ex-Im Bank by the submission of a claim.

This collection of information is necessary, pursuant to12 U.S.C. 635 (a)(1), to determine if such claim complies with the terms and conditions of the relevant guarantee. The Notice of Claim and Proof of Loss, Medium Term Guarantee is used to determine compliance with the terms of the guarantee and the appropriateness of paying a claim. Export-Import Bank customers are able to submit this form on paper or electronically.

The information collection tool can be reviewed at *http://www.exim.gov/pub/pending/eib10-05.pdf.*

DATES: Comments must be received on or before May 7, 2014 to be assured of consideration.

ADDRESSES: Comments may be submitted electronically on *WWW.REGULATIONS.GOV* or by mail to Office of Information and Regulatory Affairs, 725 17th Street NW., Washington, DC 20038 Attn: OMB 3048–10–05.

SUPPLEMENTARY INFORMATION:

Title and Form Number: EIB 10–05 Notice of Claim and Proof of Loss, Medium Term Guarantee.
OMB Number: 3048–0034.
Type of Review: Regular.
Need and Use: This collection of information is necessary, pursuant to12 U.S.C. 635 (a)(1), to determine if such claim complies with the terms and conditions of the relevant guarantee.
Affected Public: This form affects entities involved in the export of U.S. goods and services.
Annual Number of Respondents: 65.
Estimated Time per Respondent: 1½ hours.
Annual Burden Hours: 97.5 hours.
Frequency of Reporting of Use: As needed to request a claim payment.
Government Expenses:
Reviewing time per year: 65 hours.
Average Wages per Hour: $42.50.
Average Cost per Year: (time* wages) $2,762.
Benefits and Overhead: 20%.
Total Government Cost: $3,315.

Bonita Jones,

Records Management Division, Office of the Chief Information Officer.

[FR Doc. 2014–07698 Filed 4–4–14; 8:45 am]

BILLING CODE 6690–01–P

EXPORT-IMPORT BANK OF THE UNITED STATES

[Public Notice 2013–3002]

Agency Information Collection Activities: Comment Request

AGENCY: Export-Import Bank of the United States.

ACTION: Submission for OMB review and comments request.

Form Title: EIB 10–04 Notice of Claim and Proof of Loss, Working Capital Guarantee.

SUMMARY: The Export-Import Bank of the United States (Ex-Im Bank), as part of its continuing effort to reduce paperwork and respondent burden, invites the general public and other Federal Agencies to comment on the proposed information collection, as required by the Paperwork Reduction Act of 1995.

By neutralizing the effect of export credit support offered by foreign governments and by absorbing credit risks that the private sector will not accept, Ex-Im Bank enables U.S. exporters to compete fairly in foreign markets on the basis of price and product. Under the Working Capital Guarantee Program, Ex-Im Bank provides repayment guarantees to lenders on secured, short-term working capital loans made to qualified exporters. The guarantee may be approved for a single loan or a revolving line of credit. In the event that a borrower defaults on a transaction guaranteed by Ex-Im Bank the guaranteed lender may seek payment by the submission of a claim.

This collection of information is necessary, pursuant to 12 USC Sec. 635 (a) (1), to determine eligibility of the export sales for insurance coverage. The Report of Premiums Payable for Financial Institutions Only is used to determine the eligibility of the shipment(s) and to calculate the premium due to Ex-Im Bank for its support of the shipment(s) under its insurance program. Export-Import Bank customers will be able to submit this form on paper or electronically.

The Export-Import Bank has made a change to the report to have the insured financial institution provide the industry code (NAICS) associated with each specific export. The insured financial institution already provides a short description of the goods and/or services being exported. This additional piece of information will allow Ex-Im Bank to better track what exports it is covering with its insurance policy.

The information collection tool can be reviewed at: *http://www.exim.gov/pub/pending/eib10-04.pdf.*

DATES: Comments must be received on or before May 7, 2014 to be assured of consideration.

ADDRESSES: Comments may be submitted electronically on *WWW.REGULATIONS.GOV* or by mail to Office of Information and Regulatory Affairs, 725 17th Street NW., Washington, DC 20038 Attn: OMB 3048–10–04.

SUPPLEMENTARY INFORMATION:

Title and Form Number: EIB 10–04 Notice of Claim and Proof of Loss, Working Capital Guarantee.

OMB Number: 3048–0035.

Type of Review: Regular.

Need and Use: This collection of information is necessary, pursuant to 12 U.S.C. 635(a)(1), to determine if such claim complies with the terms and conditions of the relevant insurance policy.

Affected Public: This form affects entities involved in the export of U.S. goods and services.

Annual Number of Respondents: 20.

Estimated Time per Respondent: 20 minutes.

Annual Burden Hours: 7 hours.

Frequency of Reporting of Use: Monthly.

Government Expenses:

Reviewing time per year: 860 hours.

Average Wages per Hour: $42.50.

Average Cost per Year: $36,550 (time*wages).

Benefits and Overhead: 20%.

Total Government Cost: $43,860.

Bonita Jones,

Agency Clearance Officer, Office of the Chief Information Officer.

[FR Doc. 2014–07682 Filed 4–4–14; 8:45 am]

BILLING CODE 6690–01–P

FEDERAL COMMUNICATIONS COMMISSION

Information Collection Being Submitted to the Office of Management and Budget for Review and Approval

AGENCY: Federal Communications Commission.

ACTION: Notice and request for comments.

SUMMARY: As part of its continuing effort to reduce paperwork burden and as required by the Paperwork Reduction Act (PRA) of 1995 (44 U.S.C. 3501—3520), the Federal Communications Commission invites the general public and other Federal agencies to take this opportunity to comment on the following information collection(s). Comments are requested concerning: Whether the proposed collection of information is necessary for the proper performance of the functions of the Commission, including whether the information shall have practical utility; the accuracy of the Commission's burden estimate; ways to enhance the quality, utility, and clarity of the information collected; ways to minimize the burden of the collection of information on the respondents, including the use of automated collection techniques or other forms of information technology; and ways to further reduce the information burden for small business concerns with fewer than 25 employees. The FCC may not conduct or sponsor a collection of information unless it displays a currently valid OMB control number. No person shall be subject to any penalty for failing to comply with a collection of information subject to the Paperwork Reduction Act (PRA) that does not display a valid OMB control number.

DATES: Written Paperwork Reduction Act (PRA) comments should be submitted on or before May 7, 2014. If you anticipate that you will be submitting PRA comments, but find it difficult to do so within the period of time allowed by this notice, you should advise the FCC contact listed below as soon as possible.

ADDRESSES: Submit your PRA comments to Nicholas A. Fraser, Office of Management and Budget, via fax at 202–395–5167 or via Internet at *Nicholas_A._Fraser@omb.eop.gov* and to Benish Shah, Federal Communications Commission, via the Internet at *Benish.Shah@fcc.gov.* To submit your PRA comments by email send them to: *PRA@fcc.gov.*

FOR FURTHER INFORMATION CONTACT: Benish Shah, Office of Managing Director, (202) 418–7866.

SUPPLEMENTARY INFORMATION:

OMB Control Number: 3060–0773.

Title: Section 2.803 Marketing of RF Devices Prior to Equipment Authorization.

Form Number: N/A.

Type of Review: Revision of a currently approved collection.

Respondents: Businesses or other for-profit.

Number of Respondents: 10,000 Respondents; 10,000 Responses.

Estimated Time per Response: 0.5 hours.

Frequency of Response: One time reporting requirement and third party disclosure requirement.

Obligation to Respond: Required to obtain or retain benefits. Statutory authority for this information collection is contained in 47 U.S.C. 154(i), 302, 303, 303(r), and 307.

Total Annual Burden: 5,000 hours.

Total Annual Costs: N/A.

Nature and Extent of Confidentiality: There is no need for confidentiality.

Privacy Act Impact Assessment: N/A.

Needs and Uses: The Commission will submit this information collection to the Office of Management and Budget (OMB) after this 60 day comment period in order to obtain the full year three year clearance from them. The Commission is requesting a revision of this information collection. The Commission is reporting a program change in the burden estimates. The program change increases the number of respondents from 6,000 to 10,000 (increase of 4,000 respondents) and the total annual hours are increased from 3,000 to 5,000 hours (increase of 2,000 hours).

The Commission has established rules for the marketing of radio frequency (RF) devices prior to equipment authorization under guidelines in 47 CFR 2.803. The general guidelines in § 2.803 prohibit the marketing or sale of such equipment prior to a demonstration of compliance with the applicable equipment authorization and technical requirements in the case of a device subject to verification or Declaration of Conformity without special notification. Section 2.803(c)(2) permits limited marketing activities prior to equipment authorization, for devices that could be authorized under the current rules; could be authorized under waivers of such rules that are in effect at the time of marketing; or could be authorized under rules that have been adopted by the Commission but that have not yet become effective. These devices may be not operated unless permitted by § 2.805.

The following general guidelines apply for third party notifications:

(a) A RF device may be advertised and displayed at a trade show or exhibition prior to a demonstration of compliance with the applicable technical standards and compliance with the applicable equipment authorization procedure provided the advertising and display is accompanied by a conspicuous notice specified in §§ 2.803(c)(2)(iii)(A) or 2.803(c)(2)(iii)(B).

(b) An offer for sale solely to business, commercial, industrial, scientific, or medical users of an RF device in the conceptual, developmental, design or pre-production stage prior to demonstration of compliance with the equipment authorization regulations may be permitted provided that the prospective buyer is advised in writing at the time of the offer for sale that the equipment is subject to FCC rules and that the equipment will comply with the appropriate rules before delivery to the buyer or centers of distribution.

(c) Equipment sold as evaluation kit may be sold to specific users with notice specified in § 2.803(c)(2)(iv)(B).

The information to be disclosed about marketing of the RF device is intended:

(1) To ensure the compliance of the proposed equipment with Commission rules; and

(2) To assist industry efforts to introduce new products to the marketplace more promptly.

The information disclosure applies to a variety of RF devices that:

(1) Is pending equipment authorization or verification of compliance;

(2) May be manufactured in the future;

(3) May be sold as kits; and

(4) Operates under varying technical standards.

The information disclosed is essential to ensuring that interference to radio communications is controlled.

Federal Communications Commission.

Marlene H. Dortch,

Secretary, Office of the Secretary, Office of Managing Director.

[FR Doc. 2014–07680 Filed 4–4–14; 8:45 am]

BILLING CODE 6712–01–P

FEDERAL COMMUNICATIONS COMMISSION

Information Collection Being Submitted for Review and Approval to the Office of Management and Budget

AGENCY: Federal Communications Commission.

ACTION: Notice and request for comments.

SUMMARY: As part of its continuing effort to reduce paperwork burdens, and as required by the Paperwork Reduction Act (PRA) of 1995 (44 U.S.C. 3501–3520), the Federal Communication Commission (FCC or Commission) invites the general public and other Federal agencies to take this opportunity to comment on the following information collections. Comments are requested concerning: Whether the proposed collection of information is necessary for the proper performance of the functions of the Commission, including whether the information shall have practical utility; the accuracy of the Commission's burden estimate; ways to enhance the quality, utility, and clarity of the information collected; ways to minimize the burden of the collection of information on the respondents, including the use of automated collection techniques or other forms of information technology; and ways to further reduce the information collection burden on small business concerns with fewer than 25 employees.

The FCC may not conduct or sponsor a collection of information unless it displays a currently valid OMB control number. No person shall be subject to any penalty for failing to comply with a collection of information subject to the PRA that does not display a valid OMB control number.

DATES: Written comments should be submitted on or before May 7, 2014. If you anticipate that you will be submitting comments, but find it difficult to do so within the period of time allowed by this notice, you should advise the contacts below as soon as possible.

ADDRESSES: Direct all PRA comments to Nicholas A. Fraser, OMB, via email *Nicholas_A._Fraser@omb.eop.gov*; and to Cathy Williams, FCC, via email *PRA@fcc.gov* and to *Cathy.Williams@fcc.gov*. Include in the comments the OMB control number as shown in the **SUPPLEMENTARY INFORMATION** section below.

FOR FURTHER INFORMATION CONTACT: For additional information or copies of the information collection, contact Cathy Williams at (202) 418–2918. To view a copy of this information collection request (ICR) submitted to OMB: (1) Go to the Web page <*http://www.reginfo.gov/public/do/PRAMain*>, (2) look for the section of the Web page called ''Currently Under Review,'' (3) click on the downward-pointing arrow in the ''Select Agency'' box below the ''Currently Under Review'' heading, (4) select ''Federal Communications Commission'' from the list of agencies presented in the ''Select Agency'' box, (5) click the ''Submit'' button to the right of the ''Select Agency'' box, (6) when the list of FCC ICRs currently under review appears, look for the OMB control number of this ICR and then click on the ICR Reference Number. A copy of the FCC submission to OMB will be displayed.

SUPPLEMENTARY INFORMATION:

OMB Control Number: 3060–0863.

Title: Satellite Delivery of Network Signals to Unserved Households for Purposes of the Satellite Home Viewer Act.

Form Number: Not applicable.

Type of Review: Extension of a currently approved collection.

Respondents: Business or other for-profit entities.

Number of Respondents and Responses: 848 respondents; 250,000 responses.

Estimated Time per Response: 0.50 hours.

Frequency of Response: Recordkeeping requirement, On occasion reporting requirement.

Obligation to Respond: Required to obtain or retain benefits. Statutory authority for this information collection action is contained in the Satellite Home Viewer Act, 17 U.S.C. 119. The Satellite Home Viewer Act is an amendment of the Copyright Act; and Satellite Television Extension and Localism Act of 2010, Title V of the ''American Workers, State, and Business Relief Act of 2010,'' Public Law 111–175, 124 Stat. 1218 (2010) (STELA), see footnote 3.

Total Annual Burden to Respondents: 125,000 hours.

Total Annual Costs: None.

Privacy Impact Assessment(s): No impact(s).

Nature and Extent of Confidentiality: There is no need for confidentiality with this collection of information.

Needs and Uses: 47 CFR 73.686 describes a method for measuring signal strength at a household so that the satellite and broadcast industries would have a uniform method for making an actual determination of the signal strength that a household received. The information gathered as part of the Grade B contour signal strength tests will be used to indicate whether a household is ''unserved'' by over-the-air network signals.

Satellite and broadcast industries making field strength measurements for formal submission to the Commission in rulemaking proceedings, or making such measurements upon the request of the Commission, shall follow the procedure for making and reporting such measurements which shall be included in a report to the Commission and submitted in affidavit form, in triplicate. The report shall contain the following information:

(a) Tables of field strength measurements, which for each measuring location; (b) U.S. Geological Survey topographic maps; (c) All information necessary to determine the pertinent characteristics of the transmitting installation; (d) A list of calibrated equipment used in the field strength survey; (e) A detailed description of the calibration of the measuring equipment, and (f) Terrain profiles in each direction in which measurements were made.

47 CFR 73.686 also requires satellite and broadcast companies to maintain a written record describing, for each location, factors which may affect the recorded field (i.e., the approximate time or measurement, weather, topography, overhead wiring, heights and types of vegetation, buildings and other structures, the orientation of the measuring location, objects of such shape and size that cause shadows or reflections, signals received that arrived from a direction other than that of the transmitter, survey, list of the measured value field strength, time and date of the

measurements and signature of the person making the measurements).

47 CFR 73.686(e) describes the procedures for measuring the field strength of digital television signals. These procedures will be used to determine whether a household is eligible to receive a distant digital network signal from a satellite television provider, largely rely on existing, proven methods the Commission has already established for measuring analog television signal strength at any individual location, as set forth in Section 73.686(d) of the existing rules, but include modifications as necessary to accommodate the inherent differences between analog and digital TV signals. The new digital signal measurement procedures include provisions for the location of the measurement antenna, antenna height, signal measurement method, antenna orientation and polarization, and data recording.

Therefore, satellite and broadcast industries making field strength measurements shall maintain written records and include the following information: (a) A list of calibrated equipment used in the field strength survey, which for each instrument specifies the manufacturer, type, serial number and rated accuracy, and the date of the most recent calibration by the manufacturer or by a laboratory. Include complete details of any instrument not of standard manufacture; (b) A detailed description of the calibration of the measuring equipment, including field strength meters, measuring antenna, and connecting cable; (c) For each spot at the measuring site, all factors which may affect the recorded field, such as topography, height and types of vegetation, buildings, obstacles, weather, and other local features; (d) A description of where the cluster measurements were made; (e) Time and date of the measurements and signature of the person making the measurements; (f) For each channel being measured, a list of the measured value of field strength (in units of dBμ after adjustment for line loss and antenna factor) of the five readings made during the cluster measurement process, with the median value highlighted.

Federal Communications Commission.

Gloria J. Miles,

Federal Register Liaison, Office of the Secretary, Office of Managing Director.

[FR Doc. 2014–07627 Filed 4–4–14; 8:45 am]

BILLING CODE 6712–01–P

FEDERAL COMMUNICATIONS COMMISSION

Notice of Public Information Collection(s) Being Reviewed by the Federal Communications Commission, Comments Requested

AGENCY: Federal Communications Commission.

ACTION: Notice; request for comments.

SUMMARY: As part of its continuing effort to reduce paperwork burden and as required by the Paperwork Reduction Act (PRA) of 1995 (44 U.S.C. 3501–3520), the Federal Communications Commission (FCC) invites the general public and other Federal agencies to take this opportunity to comment on the following information collection(s). Comments are requested concerning: Whether the proposed collection of information is necessary for the proper performance of the functions of the Commission, including whether the information shall have practical utility; the accuracy of the Commission's burden estimate; ways to enhance the quality, utility, and clarity of the information collected; ways to minimize the burden of the collection of information on the respondents, including the use of automated collection techniques or other forms of information technology; and further ways to reduce the information burden for small business concerns with fewer than 25 employees.

The FCC may not conduct or sponsor a collection of information unless it displays a currently valid OMB Control Number. No person shall be subject to any penalty for failing to comply with a collection of information subject to the Paperwork Reduction Act (PRA) that does not display a valid Control Number.

DATES: Written Paperwork Reduction Act (PRA) comments should be submitted on or before June 6, 2014. If you anticipate that you will be submitting comments, but find it difficult to do so within the period of time allowed by this notice, you should advise the FCC contact listed below as soon as possible.

ADDRESSES: Submit your PRA comments to Leslie F. Smith, Office of Managing Director (OMD), Federal Communications Commission (FCC), via the Internet at *Leslie.Smith@fcc.gov.* To submit your PRA comments by email, send them to *PRA@fcc.gov.*

FOR FURTHER INFORMATION CONTACT: For additional information, contact Leslie F. Smith at (202) 418–0217, or via the Internet at *PRA@fcc.gov.*

SUPPLEMENTARY INFORMATION:

OMB Control Number: 3060–0715.

Title: Telecommunications Carriers' Use of Customer Proprietary Network Information (CPNI) and Other Customer Information, CC Docket No. 96–115.

Form Number: N/A.

Type of Review: Extension of currently approved collection.

Respondents: Business or other for-profit entities.

Number of Respondents and Responses: 3,600 respondents; 174,993,821 responses.

Estimated Time per Response: 0.002 hours—50 hours.

Frequency of Response: On occasion, one time, annual and biennial reporting requirements, recordkeeping requirement, and third party disclosure requirements.

Obligation to Respond: Mandatory as required by section 222 of the Communications Act of 1934, as amended, 47 U.S.C. 222.

Total Annual Burden: 405,957 hours.

Total Annual Cost: $3,000,000.

Privacy Act Impact Assessment: No impacts.

Nature and Extent of Confidentiality: The Commission is not requesting that the respondents submit confidential information to the FCC. Respondents may, however, request confidential treatment for information they believe to be confidential under 47 CFR 0.459 of the Commission's rules.

Needs and Uses: Section 222 of the Communications Act of 1934, as amended, 47 U.S.C. 222, establishes the duty of telecommunications carriers to protect the confidentiality of its customers' proprietary information. This Customer Proprietary Network Information (CPNI) includes personally identifiable information derived from a customer's relationship with a provider of telecommunications services. This information collection implements the statutory obligations of section 222. These regulations impose safeguards to protect customers' CPNI against unauthorized access and disclosure. In March 2007, the Commission adopted new rules that focused on the efforts of providers of telecommunications services to prevent pretexting. These rules require providers of telecommunications services to adopt additional privacy safeguards that, the Commission believes, will limit pretexters' ability to obtain unauthorized access to the type of personal customer information from carriers that the Commission regulates. In addition, in furtherance of the Telephone Records and Privacy Protection Act of 2006, the Commission's rules help ensure that law

enforcement will have necessary tools to investigate and enforce prohibitions on illegal access to customer records.

Federal Communications Commission.

Marlene H. Dortch,

Secretary, Office of the Secretary.

[FR Doc. 2014–07679 Filed 4–4–14; 8:45 am]

BILLING CODE 6712–01–P

FEDERAL COMMUNICATIONS COMMISSION

Information Collection Being Reviewed by the Federal Communications Commission

AGENCY: Federal Communications Commission.

ACTION: Notice and request for comments.

SUMMARY: As part of its continuing effort to reduce paperwork burdens, and as required by the Paperwork Reduction Act (PRA) of 1995 (44 U.S.C. 3501–3520), the Federal Communications Commission (FCC or the Commission) invites the general public and other Federal agencies to take this opportunity to comment on the following information collection. Comments are requested concerning: Whether the proposed collection of information is necessary for the proper performance of the functions of the Commission, including whether the information shall have practical utility; the accuracy of the Commission's burden estimate; ways to enhance the quality, utility, and clarity of the information collected; ways to minimize the burden of the collection of information on the respondents, including the use of automated collection techniques or other forms of information technology; and ways to further reduce the information collection burden on small business concerns with fewer than 25 employees.

The FCC may not conduct or sponsor a collection of information unless it displays a currently valid control number. No person shall be subject to any penalty for failing to comply with a collection of information subject to the PRA that does not display a valid Office of Management and Budget (OMB) control number.

DATES: Written PRA comments should be submitted on or before June 6, 2014. If you anticipate that you will be submitting comments, but find it difficult to do so within the period of time allowed by this notice, you should advise the contact listed below as soon as possible.

ADDRESSES: Direct all PRA comments to Cathy Williams, FCC, via email *PRA@fcc.gov* and to *Cathy.Williams@fcc.gov.*

FOR FURTHER INFORMATION CONTACT: For additional information about the information collection, contact Cathy Williams at (202) 418–2918.

SUPPLEMENTARY INFORMATION:

OMB Control No.: 3060–0795.

Title: Associate WTB & PSHSB Call Sign & Antenna Registration Number With Licensee's FRN.

Form No.: FCC 606.

Type of Review: Extension of a currently approved collection.

Respondents: Individuals or households; Business or other for-profit; Not-for-profit institutions; State, local or tribal government.

Number of Respondents: 43,000 respondents; 43,000 responses.

Estimated Time per Response: 15 minutes (0.25 hours).

Frequency of Response: On occasion reporting requirement and third party disclosure requirement.

Total Annual Burden: 10,750 hours.

Total Annual Cost: None.

Nature and Extent of Confidentiality: In general there is no need for confidentiality. On a case-by-case basis, the Commission may be required to withhold from disclosure certain information about the location, character, or ownership of a historic property, including traditional religious sites.

Needs and Uses: The Commission will submit this information collection to the OMB after this 60-day comment period as an extension (no change in reporting and/or third-party disclosure requirements) to obtain the full three-year clearance from them.

Licensees use FCC 606 to associate their FCC Registration Number (FRN) with their Wireless Telecommunications Bureau and Public Safety Homeland Security Bureau call signs and antenna structure registration numbers. The form must be submitted before filing any subsequent applications associated with the existing license or antenna structure registration that is not associated with an FRN.

The information collected in the FCC 606 is used to populate the Universal Licensing System (ULS) with the FRNs of licensees and antenna structure registration owners who interact with ULS.

Federal Communications Commission.

Marlene H. Dortch,

Secretary, Office of the Secretary, Office of Managing Director.

[FR Doc. 2014–07681 Filed 4–4–14; 8:45 am]

BILLING CODE 6712–01–P

FEDERAL RESERVE SYSTEM

Formations of, Acquisitions by, and Mergers of Bank Holding Companies

The companies listed in this notice have applied to the Board for approval, pursuant to the Bank Holding Company Act of 1956 (12 U.S.C. 1841 *et seq.*) (BHC Act), Regulation Y (12 CFR Part 225), and all other applicable statutes and regulations to become a bank holding company and/or to acquire the assets or the ownership of, control of, or the power to vote shares of a bank or bank holding company and all of the banks and nonbanking companies owned by the bank holding company, including the companies listed below.

The applications listed below, as well as other related filings required by the Board, are available for immediate inspection at the Federal Reserve Bank indicated. The applications will also be available for inspection at the offices of the Board of Governors. Interested persons may express their views in writing on the standards enumerated in the BHC Act (12 U.S.C. 1842(c)). If the proposal also involves the acquisition of a nonbanking company, the review also includes whether the acquisition of the nonbanking company complies with the standards in section 4 of the BHC Act (12 U.S.C. 1843). Unless otherwise noted, nonbanking activities will be conducted throughout the United States.

Unless otherwise noted, comments regarding each of these applications must be received at the Reserve Bank indicated or the offices of the Board of Governors not later than May 2, 2014.

A. Federal Reserve Bank of Atlanta (Chapelle Davis, Assistant Vice President) 1000 Peachtree Street NE., Atlanta, Georgia 30309:

1. *Ameris Bancorp,* Moultrie, Georgia, to merge with Coastal Bancshares, Inc., and thereby indirectly acquire The Coastal Bank, both of Savannah, Georgia.

Board of Governors of the Federal Reserve System, April 2, 2014.

Michael J. Lewandowski,

Associate Secretary of the Board.

[FR Doc. 2014–07663 Filed 4–4–14; 8:45 am]

BILLING CODE 6210–01–P

DEPARTMENT OF DEFENSE

GENERAL SERVICES ADMINISTRATION

NATIONAL AERONAUTICS AND SPACE ADMINISTRATION

[OMB Control No. 9000–0157; Docket 2014–0055; Sequence 17]

Federal Acquisition Regulation; Information Collection Architect-Engineer Qualifications (SF 330)

AGENCY: Department of Defense (DOD), General Services Administration (GSA), and National Aeronautics and Space Administration (NASA).

ACTION: Notice of request for public comments regarding an extension to an existing OMB clearance.

SUMMARY: Under the provisions of the Paperwork Reduction Act (44 U.S.C. chapter 35), the Regulatory Secretariat Division (MVCB) will be submitting to the Office of Management and Budget (OMB) a request to review and approve an extension of a previously approved information collection requirement for the Architect–Engineer Qualifications form (SF 330).

DATES: Submit comments on or before June 6, 2014.

ADDRESSES: Submit comments identified by Information Collection 9000–0157 by any of the following methods:

- *Regulations.gov: http://www.regulations.gov.* Submit comments via the Federal eRulemaking portal by searching the OMB control number 9000–0157. Select the link ''Comment Now'' that corresponds with ''Information Collection 9000–0157''. Follow the instructions provided on the screen. Please include your name, company name (if any), and ''Information Collection 9000–0157'' on your attached document.
- *Fax:* 202–501–4067.
- *Mail:* General Services Administration, Regulatory Secretariat Division (MVCB), 1800 F Street NW., Washington, DC 20405. ATTN: Ms. Flowers/IC 9000–0157.

Instructions: Please submit comments only and cite Information Collection 9000–0157, in all correspondence related to this collection. All comments received will be posted without change to *http://www.regulations.gov,* including any personal and/or business confidential information provided.

FOR FURTHER INFORMATION CONTACT: Mr. Curtis E. Glover, Sr., Procurement Analyst, Contract Policy Division, GSA 202–501–1448 or email *Curtis.glover@gsa.gov.*

SUPPLEMENTARY INFORMATION:

A. Purpose

Standard Form 330, Part I is used by all Executive agencies to obtain information from architect-engineer firms interested in a particular project. The information on the form is reviewed by a selection panel composed of professional people and assists the panel in selecting the most qualified architect-engineer firm to perform the specific project. The form is designed to provide a uniform method for architect-engineer firms to submit information on experience, personnel, capabilities of the architect-engineer firm to perform along with information on the consultants they expect to collaborate with on the specific project.

Standard Form 330, Part II is used by all Executive agencies to obtain general uniform information about a firm's experience in architect-engineering projects. Architect-engineer firms are encouraged to update the form annually. The information obtained on this form is used to determine if a firm should be solicited for architect-engineer projects.

B. Annual Reporting Burden

Respondents: 5,000.

Responses per Respondent: 4.

Total Responses: 20,000.

Hours per Response: 29.

Total Burden Hours: 580,000.

C. Public Comments

Public comments are particularly invited on: Whether this collection of information is necessary for the proper performance of functions of the FAR, and whether it will have practical utility; whether our estimate of the public burden of this collection of information is accurate, and based on valid assumptions and methodology; ways to enhance the quality, utility, and clarity of the information to be collected; and ways in which we can minimize the burden of the collection of information on those who are to respond, through the use of appropriate technological collection techniques or other forms of information technology.

Obtaining Copies of Proposals: Requesters may obtain a copy of the information collection documents from the General Services Administration, Regulatory Secretariat Division (MVCB), 1800 F Street, NW., Washington, DC 20405. Please cite OMB Control No. 9000–0157, Architect-Engineer Qualifications (SF 330), in all correspondence.

Dated: April 1, 2014.

Karlos Morgan,

Acting Director, Federal Acquisition Policy Division, Office of Government-wide Acquisition Policy, Office of Acquisition Policy, Office of Government-wide Policy.

[FR Doc. 2014–07625 Filed 4–4–14; 8:45 am]

BILLING CODE 6820–EP–P

GENERAL SERVICES ADMINISTRATION

[Notice–PMAB–2014–01; Docket No. 2014–0002; Sequence No.14]

The President's Management Advisory Board (PMAB); Notification of Upcoming Public Advisory Meeting

AGENCY: Office of Executive Councils, U.S. General Services Administration (GSA).

ACTION: Meeting notice.

SUMMARY: The President's Management Advisory Board (PMAB), a Federal Advisory Committee established in accordance with the Federal Advisory Committee Act (FACA), 5 U.S.C., App., and Executive Order 13538, will hold a public meeting on Friday, April 25, 2014.

DATES: *Effective:* April 7, 2014.

Meeting date: The meeting will be held on Friday, April 25, 2014 beginning at 9:00 a.m. eastern time, ending no later than 1:00 p.m.

ADDRESSES: Eisenhower Executive Office Building, 1650 Pennsylvania Avenue NW., Washington, DC.

FOR FURTHER INFORMATION CONTACT: Mr. Stephen Brockelman, Designated Federal Officer, President's Management Advisory Board, Office of Executive Councils, General Services Administration, 1800 F Street NW., Washington, DC 20006, at *stephen.brockelman@gsa.gov.*

SUPPLEMENTARY INFORMATION:

Background: The PMAB was established to provide independent advice and recommendations to the President and the President's Management Council on a wide range of issues related to the development of effective strategies for the implementation of best business practices to improve Federal Government management and operation.

Agenda: The main purpose of this meeting is for the PMAB to discuss and define their focus area for 2014, improving customer service in the Federal government. The meeting will aim to identify the challenges and opportunities for customer service improvement in various Federal

agencies. The PMAB will also receive progress updates on management initiatives for which they issued recommendations in prior years. Finally, the meeting will cover planning and logistics for PMAB during the coming year.

Meeting Access: The PMAB will convene its meeting in the Eisenhower Executive Office Building, 1650 Pennsylvania Avenue NW., Washington, DC. Due to security, there will be no public admittance to the Eisenhower Building to attend the meeting. However, the meeting is open to the public; interested members of the public may view the PMAB's discussion at *http://www.whitehouse.gov/live.* Members of the public wishing to comment on the discussion or topics outlined in the Agenda should follow the steps detailed in Procedures for Providing Public Comments below.

Availability of Materials for the Meeting: Please see the PMAB Web site (*http://www.whitehouse.gov/administration/advisory-boards/pmab*) for any materials available in advance of the meeting and for meeting minutes that will be made available after the meeting. Detailed meeting minutes will be posted within 90 days of the meeting.

Procedures for Providing Public Comments: In general, public statements will be posted on the PMAB Web site (*http://www.whitehouse.gov/administration/advisory-boards/pmab*). Non-electronic documents will be made available for public inspection and copying in PMAB offices at GSA, 1800 F Street NW., Washington, DC 20006, on official business days between the hours of 10 a.m. and 5 p.m. eastern time. You can make an appointment to inspect statements by telephoning 202–501–1398. All statements, including attachments and other supporting materials, received are part of the public record and subject to public disclosure. Any statements submitted in connection with the PMAB meeting will be made available to the public under the provisions of the Federal Advisory Committee Act.

The public is invited to submit written statements for this meeting until 12:30 p.m. eastern time on Thursday, April 24, by either of the following methods: *Electronic or Paper Statements:* Submit electronic statements to Mr. Brockelman, Designated Federal Officer at *stephen.brockelman@gsa.gov;* or send paper statements in triplicate to Mr. Brockelman at the PMAB GSA address above.

Dated: April 1, 2014.

Anne Rung,

Associate Administrator, Office of Government-wide Policy, General Services Administration.

[FR Doc. 2014–07755 Filed 4–4–14; 8:45 am]

BILLING CODE 6820–BR–P

DEPARTMENT OF HEALTH AND HUMAN SERVICES

Centers for Disease Control and Prevention

[60Day–14–0109]

Proposed Data Collections Submitted for Public Comment and Recommendations

In compliance with the requirement of Section 3506(c)(2)(A) of the Paperwork Reduction Act of 1995 for opportunity for public comment on proposed data collection projects, the Centers for Disease Control and Prevention (CDC) will publish periodic summaries of proposed projects. To request more information on the proposed projects or to obtain a copy of the data collection plans and instruments, call 404–639–7570 or send comments to LeRoy Richardson, 1600 Clifton Road, MS–D74, Atlanta, GA 30333 or send an email to *omb@cdc.gov.*

Comments are invited on: (a) Whether the proposed collection of information is necessary for the proper performance of the functions of the agency, including whether the information shall have practical utility; (b) the accuracy of the agency's estimate of the burden of the proposed collection of information; (c) ways to enhance the quality, utility, and clarity of the information to be collected; and (d) ways to minimize the burden of the collection of information on respondents, including through the use of automated collection techniques or other forms of information technology. Written comments should be received within 60 days of this notice.

Proposed Project

Respiratory Protective Devices—42 CFR part 84—Regulation—(0920–0109)—Revision—National Institute for Occupational Safety and Health (NIOSH), of the Centers for Disease Control and Prevention (CDC).

Background and Brief Description

This data collection was formerly named Respiratory Protective Devices 30 CFR part 11 but in 1995, the respirator standard was moved to 42 CFR Part 84. The regulatory authority for the National Institute for Occupational Safety and Health (NIOSH) certification program for respiratory protective devices is found in the Mine Safety and Health Amendments Act of 1977 (30 U.S.C. 577a, 651 et seq., and 657(g)) and the Occupational Safety and Health Act of 1970 (30 U.S.C. 3, 5, 7, 811, 842(h), 844). These regulations have, as their basis, the performance tests and criteria for approval of respirators used by millions of American construction workers, miners, painters, asbestos removal workers, fabric mill workers, and fire fighters.

Regulations of the Environmental Protection Agency (EPA) and the Nuclear Regulatory Commission (NRC) also require the use of NIOSH-approved respirators. These regulations also establish methods for respirator manufacturers to submit respirators for testing under the regulation and have them certified as NIOSH-approved if they meet the criteria given in the above regulation.

NIOSH, in accordance with 42 CFR Part 84: (1) Issues certificates of approval for respirators which have met specified construction, performance, and protection requirements; (2) establishes procedures and requirements to be met in filing applications for approval; (3) specifies minimum requirements and methods to be employed by NIOSH and by applicants in conducting inspections, examinations, and tests to determine effectiveness of respirators; (4) establishes a schedule of fees to be charged applicants for testing and certification, and (5) establishes approval labeling requirements. Information is collected from those who request services under 42 CFR Part 84 in order to properly establish the scope and intent of request.

Information collected from requests for respirator approval functions includes contact information and information about factors likely to affect respirator performance and use. Such information includes, but is not necessarily limited to, respirator design, manufacturing methods and materials, quality assurance plans and procedures, and user instruction and draft labels, as specified in the regulation.

The main instrument for data collection for respirator approval functions is the Standard Application for the Approval of Respirators (SAF), currently Version 7. A replacement instrument which will collect the same information is in development.

Respirator manufacturers are the respondents (estimated to average 63 each year over the years 2014–2016) and upon completion of the SAF their

requests for approval are evaluated. The applications are submitted at will and the most reasonable prediction of respondents is the number from the most recent year, 63 in 2013. The decrease is likely due to random fluctuations and changes in business conditions. No survey was conducted to more thoroughly analyze the reasons for the change in number of respondents. Although there is no cost to respondents to submit other than their time to participate, respondents requesting respirator approval are required to submit fees for necessary testing as specified in 42 CFR Parts 84.20–22, 84.66, 84.258 and 84.1102. In calendar year 2013 $449,610.135 was accepted.

Applicants are required to provide test data that shows that the manufacturer is capable of ensuring that the respirator is capable of meeting the specified requirements in 42 CFR Part 84. The requirement for submitted test data is likely to be satisfied by standard testing performed by the manufacturer, and is not required to follow the relevant NIOSH Standard Test Procedures. As additional testing is not required, providing proof that an adequate test has been performed is limited to providing existing paperwork.

42 CFR Part 84 approvals offer corroboration that approved respirators are produced to certain quality standards. Although 42 CFR Part 84 Subpart E prescribes certain quality standards, it is not expected that requiring approved quality standards will impose an additional cost burden over similarly effective quality standards that are not approved under 42 CFR Part 84.

Manufacturers with current approvals are subject to site audits by the Institute or its agents. There is no fee associated with audits. Audits may occur periodically or as a result of a reported issue. Sixty site audits were scheduled for the 2013 calendar year.

ESTIMATED ANNUALIZED BURDEN HOURS

Type of respondent	Response type	Expected annual number of respondents	Average annual responses per respondent	Average burden hours per response	Total burden hours
Business or other for-profit	Standard Application for the Approval of Respirators Version 7 and Version 8.	63	7	229	100,989
Business or other for-profit	Audit	60	1	24	1,440
Total					102,429

Leroy Richardson,

Chief, Information Collection Review Office, Office of Scientific Integrity, Office of the Associate Director for Science, Office of the Director, Centers for Disease Control and Prevention.

[FR Doc. 2014–07650 Filed 4–4–14; 8:45 am]

BILLING CODE 4163–18–P

DEPARTMENT OF HEALTH AND HUMAN SERVICES

Centers for Disease Control and Prevention

[30Day–13–0729]

Agency Forms Undergoing Paperwork Reduction Act Review

The Centers for Disease Control and Prevention (CDC) publishes a list of information collection requests under review by the Office of Management and Budget (OMB) in compliance with the Paperwork Reduction Act (44 U.S.C. Chapter 35). To request a copy of these requests, call (404) 639–7570 or send an email to *omb@cdc.gov.* Send written comments to CDC Desk Officer, Office of Management and Budget, Washington, DC 20503 or by fax to (202) 395–5806. Written comments should be received within 30 days of this notice.

Proposed Project

Customer Surveys Generic Clearance for the National Center for Health Statistics (0920–0729, Expiration 04/30/2014)—Revision—National Center for Health Statistics (NCHS), Centers for Disease Control and Prevention (CDC).

Background and Brief Description

Section 306 of the Public Health Service (PHS) Act (42 U.S.C. 242k), as amended, authorizes that the Secretary of Health and Human Services (DHHS), acting through NCHS, shall collect statistics on ''the extent and nature of illness and disability of the population of the United States.'' This is a revision request for a generic approval from OMB to conduct customer surveys over the next three years.

As part of a comprehensive program, the National Center for Health Statistics (NCHS) plans to continue to assess its customers' satisfaction with the content, quality and relevance of the information it produces. NCHS will conduct voluntary customer surveys to assess strengths in agency products and services and to evaluate how well it addresses the emerging needs of its data users. Results of these surveys will be used in future planning initiatives.

The data will be collected using a combination of methodologies appropriate to each survey. These may include: Evaluation forms, mail surveys, focus groups, automated and electronic technology (e.g., email, Web-based surveys), and telephone surveys. Systematic surveys of several groups will be folded into the program. Among these are Federal customers and policy makers, state and local officials who rely on NCHS data, the broader educational, research, and public health community, and other data users. Respondents may include data users who register for and/or attend NCHS sponsored conferences; persons who access the NCHS Web site and the detailed data available through it; consultants; and others. Respondent data items may include (in broad categories) information regarding respondent's gender, age, occupation, affiliation, location, etc., to be used to characterize responses only. Other questions will attempt to obtain information that will characterize the respondents' familiarity with and use of NCHS data, their assessment of data content and usefulness, general satisfaction with available services and products, and suggestions for improvement of surveys, services and products.

The resulting information will be for NCHS internal use. There is no cost to respondents other than their time to participate in the survey. The total

burden for three years of clearance is 2,040 hours.

ESTIMATED ANNUALIZED BURDEN HOURS

Type of respondent	Form name/survey type	Number of respondents	Responses per respondent	Average burden per response (in hours)
Public/private researchers, Consultants, and others.	Questionnaire for conference registrants/attendees.	4,500	1	10/60
Public/private researchers, Consultants, and others.	Focus groups	240	1	1
Public/private researchers, Consultants, and others.	Web-based	4,500	1	10/60
Public/private researchers, Consultants, and others.	Other customer surveys	1,200	1	15/60

LeRoy A. Richardson,

Chief, Information Collection Review Office, Office of Scientific Integrity, Office of the Associate Director for Science, Office of the Director, Center for Disease Control and Prevention.

[FR Doc. 2014–07649 Filed 4–4–14; 8:45 am]

BILLING CODE 4163–18–P

DEPARTMENT OF HEALTH AND HUMAN SERVICES

Administration for Children and Families

Proposed Information Collection Activity; Comment Request

Title: State Plan for Grants to States for Refugee Resettlement.

OMB No.: 0970–0351.

Description: A State Plan is required by 8 U.S.C. 1522 of the Immigration and Nationality Act (the Act) [Title IV, Sec. 412 of the Act] for each State agency requesting Federal funding for refugee resettlement under 8 U.S.C. 524 [Title IV, Sec. 414 of the Act], including Refugee Cash and Medical Assistance, Unaccompanied Minor Refugee Program, Refugee Social Services, Cuban/Haitian Entrant Program and Targeted Assistance program funding. The State Plan is a comprehensive narrative description of the nature and scope of a States programs and provides assurances that the programs will be administered in conformity with the specific requirements stipulated in 45 CFR 400.4–400.9. The State Plan must include all applicable State procedures, designations, and certifications for each requirement as well as supporting documentation. The plan assures ORR that the State is capable of administering refugee assistance and coordinating employment and other social services for eligible caseloads in conformity with specific requirements. Implementation of the Affordable Care Act has significant impacts on States' administration of Refugee Medical Assistance and requires information to ensure accountability and compliance with regulations. Also, Revised Medical Screening Guidelines for Newly Arriving Refugees policy (State Letter #12–09) requires assurances that medical screening is conducted in compliance with regulations and policies. The increasing complexity of the Unaccompanied Refugee Minor program, impacted by changes in federal child welfare legislation as well as state child welfare statutes, regulations and IV–B and IV–E plans, necessitates information and assurances for review of State Plans for URM programs against requirements and mandatory standards under 45 CFR Part 400, subpart H and associated State Letters and ORR guidance. Information and assurances address administrative structure and state oversight, legal responsibility, eligibility, services and case review/planning, and interstate movement.

States must use a pre-print format for required components of State Plans for ORR-funded refugee resettlement services and benefits prepared by the Office of Refugee Resettlement (ORR) of the Administration for Children and Families (ACF).

States must submit by August 15 each year new or amended State Plan for the next Federal fiscal year. For previously approved plan, States must certify no later than October 31 each year that the approved State plan is current and continues in effect.

Respondents: State Agencies, Replacement Designees under 45 CFR 400.301(c), and Wilson-Fish Grantees (State 2 Agencies) administering or supervising the administration of programs under Title IV of the Act.

ANNUAL BURDEN ESTIMATES

Instrument	Number of respondents	Number of responses per respondent	Average burden hours per response	Total burden hours
Title IV State Plan	50	1	15	750

Estimated Total Annual Burden Hours: 750.

In compliance with the requirements of Section 506(c) (2) (A) of the Paperwork Reduction Act of 1995, the Administration for Children and Families is soliciting public comment on the specific aspects of the information collection described above. Copies of the proposed collection of information can be obtained and comments may be forwarded by writing to the Administration for Children and Families, Office of Planning, Research and Evaluation, 370 L'Enfant Promenade SW., Washington, DC 20447, Attn: ACF Reports Clearance Officer. Email address: *infocollection@acf.hhs.gov.* All requests should be identified by the title of the information collection.

The Department specifically requests comments on: (a) Whether the proposed collection of information is necessary

for the proper performance of the functions of the agency, including whether the information shall have practical utility; (b) the accuracy of the agency's estimate of the burden of the proposed collection of information; (c) the quality, utility, and clarity of the information to be collected; and (d) ways to minimize the burden of the collection of information on respondents, including through the use of automated collection techniques or other forms of information technology. Consideration will be given to comments and suggestions submitted within 60 days of this publication.

Robert Sargis,

Reports Clearance Officer.

[FR Doc. 2014–07723 Filed 4–4–14; 8:45 am]

BILLING CODE 4184–01–P

DEPARTMENT OF HEALTH AND HUMAN SERVICES

Administration for Children and Families

Proposed Information Collection Activity; Comment Request

Proposed Projects

Title: Rescue & Restore Regional Program Project Data.

OMB No.: 0970—NEW.

Description: The Trafficking Victims Protection Act of 2000 (TVPA), as amended, authorizes the Secretary of Health and Human Services (Secretary) to expand benefits and services to victims of severe forms of trafficking in persons in the United States, without regard to the immigration status of such victims. Such benefits and services may include services to assist potential victims of trafficking in achieving certification (Section 107(b)(1)(B) of the TVPA, 22 U.S.C. 7105(b)(1)(B)). It also authorizes the President, acting through the Secretary and the heads of other Federal departments, to establish and carry out programs to increase public awareness, particularly among potential victims of trafficking, of the dangers of trafficking and the protections that are available for victims of trafficking (Section 106(b) of the TVPA, 22 U.S.C. 7104(b)).

The Secretary delegated authority to carry out these responsibilities to the Assistant Secretary for Children and Families who further delegated the authority to the Director of the Office of Refugee Resettlement (ORR).

The intent of the *Rescue & Restore Victims of Human Trafficking* campaign, launched in 2004, is to increase the identification of trafficking victims in the United States and to help those victims receive the benefits and services they need to restore their lives. The purpose of the Rescue & Restore Victims of Trafficking Regional Program (Rescue & Restore Program) is to increase the identification and protection of foreign victims of human trafficking in the United States and to promote local capacity to prevent human trafficking and protect human trafficking victims. The Rescue & Restore Program also seeks to remove barriers to prevention and protection specific to foreign human trafficking victims who live in the United States.

The Rescue & Restore Program has the following objectives:

(1) Identification and Referral of Foreign Victims of Human Trafficking: To identify foreign victims of trafficking and refer them to service delivery systems.

(2) Training and Technical Assistance: To build local capacity by providing training and technical assistance on human trafficking to local organizations not involved in a local coalition.

(3) Coalition Building: To lead or actively participate in a community-led effort to bring together and leverage local resources to address human trafficking in a region, such as a Rescue & Restore Coalition or law enforcement task force (''coalition'').

(4) Public Awareness: To promote the public's awareness of human trafficking by educating the public about the dangers of human trafficking, possible indicators of sex and labor trafficking, and the protections available to victims.

To measure each grant project's performance progress and the success of the program, and to assist grantees to assess and improve their projects over the course of the project period, ACF proposes to require grantees to input numbers for each numeric indicator into a spreadsheet during the 36-month project period.

ACF proposes to collect data for the following indicators:

Identification and Referral of Foreign Victims of Human Trafficking

- The number of outreach events conducted by the grantee;
- The number of people reached at outreach events;
- The number of potential male and female, adult and minor foreign human trafficking victims identified through Rescue & Restore project efforts;
- The number of potential male and female, adult and minor foreign human trafficking victims referred by the grantee to service providers; and
- The number of male and female, adult and minor foreign human trafficking victims who receive Certification, Eligibility, and/or Interim Assistance Letters as a result of the grantee's efforts.

Training and Technical Assistance

- The number of persons in social service agencies, law enforcement agencies, and other relevant professional, community-based, and faith-based organizations who were trained by the grantee;
- The number of persons whose knowledge of human trafficking measurably increased as a result of grantee training as evidenced by the use of established practices in assessing learning; and
- The number of social service, law enforcement, health, legal, education, or other professionals provided technical assistance on identifying human trafficking victims and referring them for services or to law enforcement.

Coalition Building

- The number and percentage of coalition meetings led or attended by the grantee; and
- The number of coalition meetings in which the applicant proposed or promoted new or more efficient ways to combat human trafficking, improve coalition effectiveness, or assist trafficking victims in the targeted geographic location.

Public Awareness

- The number of people, distinguished by professional, occupational, community, or demographic sector, reached during strategic public awareness activities conducted by the grantee; and
- The number of people who reported knowledge of human trafficking information that was distributed as a result of the applicant's public awareness efforts.

In addition, ACF proposes to collect information on the victims and potential victims of trafficking (victims) identified as a result of each project's activities. ACF will not collect information about U.S. citizens or Lawful Permanent Residents. ORR will aggregate this information to include in reports to Congress, which are available to the public, to help inform strategies and policies to prevent trafficking in persons and to protect victims. This information will also help ORR assess the project's performance in identifying victims and referring them for services.

ORR proposes to collect the following information, if available, for each victim

reached by a grant recipient or any partner organizations:

- Type of Trafficking (Labor, Sex, Labor and Sex, Unknown);
- Client Identifier (e.g., Initials, Date of Birth, and Country of Origin);
- Client information (Sex, Adult/Minor);
- Description of trafficking situation;
- Date that organization made contact with the victim began establishing trust and/or screened the person for victim status;
- Date that grantee positively identified person as a victim of a severe form of trafficking in persons;
- Documentation from the Department of Homeland Security (DHS) about the time of temporary status the victim is pursuing (e.g., Continued Presence, T Visa, U Visa, SIJS);
- Name of service agency assisting the victim;
- Date of HHS Certification or Eligibility; and
- Date the agency or victim terminated contact, with space for explanation.

Respondents: Rescue & Restore Victims of Human Trafficking Regional Program grantees.

ANNUAL BURDEN ESTIMATES

Instrument	Number of respondents	Number of responses per respondent	Average burden hours per response	Total burden hours
Excel spreadsheet	20	4	4	16

Estimated Total Annual Burden Hours: 320.

In compliance with the requirements of Section 506(c)(2)(A) of the Paperwork Reduction Act of 1995, the Administration for Children and Families is soliciting public comment on the specific aspects of the information collection described above. Copies of the proposed collection of information can be obtained and comments may be forwarded by writing to the Administration for Children and Families, Office of Planning, Research and Evaluation, 370 L'Enfant Promenade, SW., Washington, DC 20447, Attn: ACF Reports Clearance Officer. Email address: *infocollection@acf.hhs.gov.* All requests should be identified by the title of the information collection.

The Department specifically requests comments on: (a) Whether the proposed collection of information is necessary for the proper performance of the functions of the agency, including whether the information shall have practical utility; (b) the accuracy of the agency's estimate of the burden of the proposed collection of information; (c) the quality, utility, and clarity of the information to be collected; and (d) ways to minimize the burden of the collection of information on respondents, including through the use of automated collection techniques or other forms of information technology. Consideration will be given to comments and suggestions submitted within 60 days of this publication.

Robert Sargis,

Reports Clearance Officer.

[FR Doc. 2014–07606 Filed 4–4–14; 8:45 am]

BILLING CODE 4184–01–P

DEPARTMENT OF HEALTH AND HUMAN SERVICES

Administration for Children and Families

Submission for OMB Review; Comment Request

Title: Permanency Innovations Initiative Evaluation: Phase 3.

OMB No.: 0970–0408.

Description: The Administration for Children and Families (ACF), U.S. Department of Health and Human Services (HHS) intends to collect data for an evaluation of the Permanency Innovations Initiative (PII). This 5-year initiative, funded by the Children's Bureau (CB) within ACF, is intended to build the evidence base for innovative interventions that enhance well-being and improve permanency outcomes for particular groups of children and youth who are at risk for long-term foster care and who experience the most serious barriers to timely permanency. The CB funded six grantees to identify local barriers to permanent placement and implement innovative strategies that mitigate or eliminate those barriers and reduce the likelihood that children will remain in foster care for 3 years or longer. In addition, evaluation plans were developed to support rigorous site-specific and cross-site studies to document the implementation and effectiveness of the grantees' projects and the initiative overall.

Data collection for the PII evaluation includes a number of components being launched at different points in time. Phase 1 included data collection for a cross-site implementation evaluation and site-specific evaluations of two PII grantees (approved August 2012; Washoe County, Nevada, and the State of Kansas). Phase 2 (approved August 2013) included data collection for site-specific evaluations of two PII grantees: Illinois Department of Children and Family Services (DCFS) and the Los Angeles Gay and Lesbian Center's Recognize Intervene Support Empower (RISE) project. Phase 3 includes data collection for a cross-site cost study, additional data collection components for the RISE project, and a cross-site administrative data study assessing outcomes. Phase 4 will include data collection for the California Department of Social Services' California Partnership for Permanency (CAPP) project. Data for the evaluations are collected through surveys of children, youth, foster parents, guardians, biological parents, permanency resources, and caseworkers, supervisors, administrators/managers, and other agency staff. The administrative data study does not impose any new data collection requirements but uses data already compiled and reported by the states.

Respondents: Children/youth and their parents, guardians, permanency resources, or foster caregivers; caseworkers, supervisors, administrators/managers, or other agency staff.

ANNUAL BURDEN ESTIMATES

Instrument	Annual number of respondents	Number of responses per respondent	Average burden hours per response	Total annual burden hours
RISE CCT Youth Interview (ages 11–19)	22	2	1.3	57
RISE CCT Qualitative Youth Interview (ages 11–19)	22	1	1.2	26
RISE CCT Facilitator Interview (Facilitator Burden)	2	4	0.2	2
RISE CCT Facilitator Interview (Child burden)	3	2	.5	3
RISE CCT Facilitator Survey	2	21	0.2	8
RISE CCT Facilitator submission of CAFAS data [1]	2	21	0.1	4
RISE CCT Permanency Resource Interview	11	2	1.0	22
RISE CCT Interview with Current Caregiver	11	2	0.6	13
RISE CCT burden				135
RISE ORB Staff Follow-Up Survey	157	1	0.3	47
RISE ORB burden				47
Cost Study Focus Group Preparation	9	1	1.5	14
Cost Study Focus Group	9	1	4.0	36
Trial Administration of Cost Study Activity Logs	9	1	1.5	14
Weekly Case Work Activity Log	123	52	0.4	2,558
Weekly Supervision Activity Log	39	52	0.4	811
Monthly Management/Administration Log	30	12	0.5	180
Cost study burden				3,613
Administrative data submission, no added fields	1	12	0.3	2
Administrative data submission with added fields	1	12	0.8	10
Administrative data study burden				12

[1] The CAFAS is administered as part of case planning, so the only burden is in submitting the CAFAS data to the evaluation team.

Estimated Total Annual Burden Hours: 3,807.

Additional Information: Copies of the proposed collection may be obtained by writing to the Administration for Children and Families, Office of Planning, Research and Evaluation, 370 L'Enfant Promenade SW., Washington, DC 20447, Attn: OPRE Reports Clearance Officer. All requests should be identified by the title of the information collection. Email address: *OPREinfocollection@acf.hhs.gov.*

OMB Comment: OMB is required to make a decision concerning the collection of information between 30 and 60 days after publication of this document in the **Federal Register**. Therefore, a comment is best assured of having its full effect if OMB receives it within 30 days of publication. Written comments and recommendations for the proposed information collection should be sent directly to the following: Office of Management and Budget, Paperwork Reduction Project, Email: *OIRA_SUBMISSION@OMB.EOP.GOV,* Attn: Desk Officer for the Administration for Children and Families.

Karl Koerper,

OPRE Reports Clearance Officer.

[FR Doc. 2014–07614 Filed 4–4–14; 8:45 am]

BILLING CODE 4184–01–P

DEPARTMENT OF HEALTH AND HUMAN SERVICES

Food and Drug Administration

[Docket No. FDA–2004–N–0193]

Agency Information Collection Activities: Proposed Collection; Comment Request; Current Good Manufacturing Practice Regulations for Medicated Feeds

AGENCY: Food and Drug Administration, HHS.

ACTION: Notice.

SUMMARY: The Food and Drug Administration (FDA) is announcing an opportunity for public comment on the proposed collection of certain information by the Agency. Under the Paperwork Reduction Act of 1995 (the PRA), Federal Agencies are required to publish notice in the **Federal Register** concerning each proposed collection of information, including each proposed extension of an existing collection of information, and to allow 60 days for public comment in response to the notice. This notice solicits comments on the recordkeeping requirements for manufacturers of medicated animal feeds.

DATES: Submit either electronic or written comments on the collection of information by June 6, 2014.

ADDRESSES: Submit electronic comments on the collection of information to *http://www.regulations.gov.* Submit written comments on the collection of information to the Division of Dockets Management (HFA–305), Food and Drug Administration, 5630 Fishers Lane, Rm. 1061, Rockville, MD 20852. All comments should be identified with the docket number found in brackets in the heading of this document.

FOR FURTHER INFORMATION CONTACT: FDA PRA Staff, Office of Operations, Food and Drug Administration, 1350 Piccard Dr., PI50–400B, Rockville, MD 20850, *PRAStaff@fda.hhs.gov.*

SUPPLEMENTARY INFORMATION: Under the PRA (44 U.S.C. 3501–3520), Federal Agencies must obtain approval from the Office of Management and Budget (OMB) for each collection of information they conduct or sponsor. ''Collection of information'' is defined in 44 U.S.C. 3502(3) and 5 CFR 1320.3(c) and includes Agency requests or requirements that members of the public submit reports, keep records, or provide information to a third party. Section 3506(c)(2)(A) of the PRA (44 U.S.C. 3506(c)(2)(A)) requires Federal

Agencies to provide a 60-day notice in the **Federal Register** concerning each proposed collection of information, including each proposed extension of an existing collection of information, before submitting the collection to OMB for approval. To comply with this requirement, FDA is publishing notice of the proposed collection of information set forth in this document.

With respect to the following collection of information, FDA invites comments on these topics: (1) Whether the proposed collection of information is necessary for the proper performance of FDA's functions, including whether the information will have practical utility; (2) the accuracy of FDA's estimate of the burden of the proposed collection of information, including the validity of the methodology and assumptions used; (3) ways to enhance the quality, utility, and clarity of the information to be collected; and (4) ways to minimize the burden of the collection of information on respondents, including through the use of automated collection techniques, when appropriate, and other forms of information technology.

Current Good Manufacturing Practice Regulations for Medicated Feeds—21 CFR Part 225 (OMB Control Number 0910–0152)—Extension

Under section 501 of the Federal Food, Drug, and Cosmetic Act (the FD&C Act) (21 U.S.C. 351), FDA has the statutory authority to issue current good manufacturing practice (cGMP) regulations for drugs, including medicated feeds. Medicated feeds are administered to animals for the prevention, cure, mitigation, or treatment of disease, or growth promotion and feed efficiency. Statutory requirements for cGMPs have been codified under part 225 (21 CFR part 225). Medicated feeds that are not manufactured in accordance with these regulations are considered adulterated under section 501(a)(2)(B) of the FD&C Act. Under part 225, a manufacturer is required to establish, maintain, and retain records for a medicated feed, including records to document procedures required during the manufacturing process to assure that proper quality control is maintained. Such records would, for example, contain information concerning receipt and inventory of drug components, batch production, laboratory assay results (i.e. batch and stability testing), labels, and product distribution.

This information is needed so that FDA can monitor drug usage and possible misformulation of medicated feeds to investigate violative drug residues in products from treated animals and to investigate product defects when a drug is recalled. In addition, FDA will use the cGMP criteria in part 225 to determine whether or not the systems and procedures used by manufacturers of medicated feeds are adequate to assure that their feeds meet the requirements of the act as to safety and also that they meet their claimed identity, strength, quality, and purity, as required by section 501(a)(2)(B) of the FD&C Act.

A license is required when the manufacturer of a medicated feed involves the use of a drug or drugs that FDA has determined requires more control because of the need for a withdrawal period before slaughter or because of carcinogenic concerns. Conversely, a license is not required and the recordkeeping requirements are less demanding for those medicated feeds for which FDA has determined that the drugs used in their manufacture need less control. Respondents to this collection of information are commercial feed mills and mixer-feeders.

FDA estimates the burden of this collection of information as follows:

TABLE 1—ESTIMATED ANNUAL RECORDKEEPING BURDEN

[Registered licensed commercial feed mills] [1]

21 CFR Section	Number of recordkeepers	Number of records per recordkeeper	Total annual records	Average burden per recordkeeper	Total hours
225.42(b)(5) through (b)(8)	840	260	218,400	1	218,400
225.58(c) and (d)	840	45	37,800	.50 (30 minutes)	18,900
225.80(b)(2)	840	1,600	1,344,000	.12 (7 minutes)	161,280
225.102(b)(1)	840	7,800	6,552,000	.08 (5 minutes)	524,160
225.110(b)(1) and (b)(2)	840	7,800	6,552,000	.015 (1 minute)	98,280
225.115(b)(1) and (b)(2)	840	5	4,200	.12 (7 minutes)	504
Total					1,021,524

[1] There are no capital or operating and maintenance costs associated with this collection of information.

TABLE 2—ESTIMATED ANNUAL RECORDKEEPING BURDEN

[Registered licensed mixer-feeders] [1]

21 CFR Section	Number of recordkeepers	Number of records per recordkeeper	Total annual records	Average burden per recordkeeper	Total hours
225.42(b)(5) through (b)(8)	100	260	26,000	.15 (9 minutes)	3,900
225.58(c) and (d)	100	36	3,600	.50 (30 minutes)	1,800
225.80(b)(2)	100	48	4,800	.12 (7 minutes)	576
225.102(b)(1) through (b)(5)	100	260	26,000	.40 (24 minutes)	10,400
Total					16,676

[1] There are no capital costs or operating and maintenance costs associated with this collection of information.

TABLE 3—ESTIMATED ANNUAL RECORDKEEPING BURDEN

[Nonregistered unlicensed commercial feed mills] [1]

21 CFR Section	Number of recordkeepers	Number of records per recordkeeper	Total annual records	Average burden per recordkeeper	Total hours
225.142	4,186	4	16,744	1	16,744
225.158	4,186	1	4,186	4	16,744
225.180	4,186	96	401,856	.12 (7 minutes)	48,223
225.202	4,186	260	1,088,360	.65 (39 minutes)	707,434
Total					789,145

[1] There are no capital costs or operating and maintenance costs associated with this collection of information.

TABLE 4—ESTIMATED ANNUAL RECORDKEEPING BURDEN

[Nonregistered unlicensed mixer-feeders] [1]

21 CFR Section	Number of recordkeepers	Number of records per recordkeeper	Total annual records	Average burden per recordkeeper	Total hours
225.142	3,400	4	13,600	1	13,600
225.158	3,400	1	3,400	4	13,600
225.180	3,400	32	108,800	.12 (7 minutes)	13,056
225.202	3,400	260	884,000	.33 (20 minutes)	291,720
Total					331,976

[1] There are no capital costs or operating and maintenance costs associated with this collection of information.

The estimate of time required for record preparation and maintenance is based on Agency communications with industry. Other information needed to finally calculate the total burden hours (i.e., number of recordkeepers, number of medicated feeds being manufactured, etc.) is derived from Agency records and experience.

Dated: March 28, 2014.

Leslie Kux,

Assistant Commissioner for Policy.

[FR Doc. 2014–07646 Filed 4–4–14; 8:45 am]

BILLING CODE 4164–01–P

DEPARTMENT OF HEALTH AND HUMAN SERVICES

Food and Drug Administration

[Docket No. FDA–2004–N–0389]

Agency Information Collection Activities; Proposed Collection; Comment Request; Current Good Manufacturing Practice Regulations for Type A Medicated Articles

AGENCY: Food and Drug Administration, HHS.

ACTION: Notice.

SUMMARY: The Food and Drug Administration (FDA) is announcing an opportunity for public comment on the proposed collection of certain information by the Agency. Under the Paperwork Reduction Act of 1995 (the PRA), Federal Agencies are required to publish notice in the **Federal Register** concerning each proposed collection of information, including each proposed extension of an existing collection of information, and allow 60 days for public comment in response to the notice. This notice solicits comments on the recordkeeping requirements for manufacturers of Type A medicated articles.

DATES: Submit either electronic or written comments on the collection of information by June 6, 2014.

ADDRESSES: Submit electronic comments on the collection of information to *http://www.regulations.gov.* Submit written comments on the collection of information to the Division of Dockets Management (HFA–305), Food and Drug Administration, 5630 Fishers Lane, rm. 1061, Rockville, MD 20852. All comments should be identified with the docket number found in brackets in the heading of this document.

FOR FURTHER INFORMATION CONTACT: FDA PRA Staff, Office of Operations, Food and Drug Administration, 1350 Piccard Dr., PI50–400B, Rockville, MD 20850, *PRAStaff@fda.hhs.gov.*

SUPPLEMENTARY INFORMATION: Under the PRA, 44 U.S.C. 3501–3520, Federal Agencies must obtain approval from the Office of Management and Budget (OMB) for each collection of information they conduct or sponsor. ''Collection of information'' is defined in 44 U.S.C. 3502(3) and 5 CFR 1320.3(c) and includes Agency requests or requirements that members of the public submit reports, keep records, or provide information to a third party. Section 3506(c)(2)(A) of the PRA (44 U.S.C. 3506(c)(2)(A)) requires Federal Agencies to provide a 60-day notice in the **Federal Register** concerning each proposed collection of information, including each proposed reinstatement of an existing collection of information, before submitting the collection to OMB for approval. To comply with this requirement, FDA is publishing notice of the proposed collection of information set forth in this document.

With respect to the following collection of information, FDA invites comments on these topics: (1) Whether the proposed collection of information is necessary for the proper performance of FDA's functions, including whether the information will have practical utility; (2) the accuracy of FDA's estimate of the burden of the proposed collection of information, including the validity of the methodology and assumptions used; (3) ways to enhance the quality, utility, and clarity of the information to be collected; and (4) ways to minimize the burden of the collection of information on respondents, including through the use of automated collection techniques, when appropriate, and other forms of information technology.

Current Good Manufacturing Practice Regulations for Type A Medicated Articles—21 CFR Part 226 (OMB Control Number 0910–0154)—Extension

Under section 501 of the Federal Food, Drug, and Cosmetic Act (the FD&C Act), FDA has the statutory authority to issue current good manufacturing practice (cGMP) regulations for drugs, including Type A medicated articles. A Type A medicated article is a feed product containing a concentrated drug diluted with a feed carrier substance. A Type A medicated article is intended solely for use in the manufacture of another Type A medicated article or a Type B or Type C medicated feed. Medicated feeds are administered to animals for the prevention, cure, mitigation, or treatment of disease or for growth promotion and feed efficiency.

Statutory requirements for cGMPs for Type A medicated articles have been codified in part 226 (21 CFR part 226). Type A medicated articles which are not manufactured in accordance with these regulations are considered adulterated under section 501(a)(2)(B) of the FD&C Act (21 U.S.C. 351(a)(2)(B). Under part 226, a manufacturer is required to establish, maintain, and retain records for Type A medicated articles, including records to document procedures required under the manufacturing process to assure that proper quality control is maintained. Such records would, for example, contain information concerning receipt and inventory of drug components, batch production, laboratory assay results (i.e., batch and stability testing), and product distribution.

This information is needed so that FDA can monitor drug usage and possible misformulation of Type A medicated articles. The information could also prove useful to FDA in investigating product defects when a drug is recalled. In addition, FDA will use the cGMP criteria in part 226 to determine whether or not the systems used by manufacturers of Type A medicated articles are adequate to assure that their medicated articles meet the requirements of the FD&C Act as to safety and also meet the article's claimed identity, strength, quality, and purity, as required by section 501(a)(2)(B) of the FD&C Act. The respondents for Type A medicated articles are pharmaceutical firms that manufacture both human and veterinary drugs, those firms that produce only veterinary drugs, and commercial feed mills.

FDA estimates the burden of this collection of information as follows:

TABLE 1—ESTIMATED ANNUAL RECORDKEEPING BURDEN [1]

21 CFR Section	Number of recordkeepers	Number of records per recordkeeper	Total annual records	Average burden per recordkeeper	Total hours
226.42	65	260	16,900	0.75 (45 minutes)	12,675
226.58	65	260	16,900	1.75 (1 hour, 45 minutes)	29,575
226.80	65	260	16,900	0.75 (45 minutes	12,675
226.102	65	260	16,900	1.75 (1 hour, 45 minutes	29,575
226.110	65	260	16,900	0.25 (15 minutes	4,225
226.115	65	10	650	0.5 (30 minutes)	325
Total					89,050

[1] There are no capital costs or operating and maintenance costs associated with this collection.

The estimate of time required for record preparation and maintenance is based on previous Agency communications with industry. Other information needed to calculate the total burden hours (i.e., manufacturing sites, number of Type A medicated articles being manufactured, etc.) are derived from Agency records and experience.

Dated: March 28, 2014.

Leslie Kux,

Assistant Commissioner for Policy.

[FR Doc. 2014–07647 Filed 4–4–14; 8:45 am]

BILLING CODE 4160–01–P

DEPARTMENT OF HEALTH AND HUMAN SERVICES

Food and Drug Administration

[Docket No. FDA–2010–N–0597]

Agency Information Collection Activities; Proposed Collection; Comment Request; Index of Legally Marketed Unapproved New Animal Drugs for Minor Species; Extension

AGENCY: Food and Drug Administration, HHS.

ACTION: Notice.

SUMMARY: The Food and Drug Administration (FDA) is announcing an opportunity for public comment on the proposed collection of certain information by the Agency. Under the Paperwork Reduction Act of 1995 (the PRA), Federal Agencies are required to publish notice in the **Federal Register** concerning each proposed collection of information, including each proposed extension of an existing collection of information, and to allow 60 days for public comment in response to the notice. This notice solicits comments on the burden hours associated with indexing of legal marketed unapproved new animal drugs for minor species.

DATES: Submit either electronic or written comments on the collection of information by June 6, 2014.

ADDRESSES: Submit electronic comments on the collection of information to *http://www.regulations.gov.* Submit written comments on the collection of information to the Division of Dockets Management (HFA–305), Food and Drug Administration, 5630 Fishers Lane, Rm. 1061, Rockville, MD 20852. All comments should be identified with the docket number found in brackets in the heading of this document.

FOR FURTHER INFORMATION CONTACT: FDA PRA Staff, Office of Operations, Food and Drug Administration, 1350 Piccard Dr., PI50–400B, Rockville, MD 20850, *PRAStaff@fda.hhs.gov.*

SUPPLEMENTARY INFORMATION: Under the PRA (44 U.S.C. 3501–3520), Federal Agencies must obtain approval from the Office of Management and Budget

(OMB) for each collection of information they conduct or sponsor. ''Collection of information'' is defined in 44 U.S.C. 3502(3) and 5 CFR 1320.3(c) and includes Agency requests or requirements that members of the public submit reports, keep records, or provide information to a third party. Section 3506(c)(2)(A) of the PRA (44 U.S.C. 3506(c)(2)(A)) requires Federal Agencies to provide a 60-day notice in the **Federal Register** concerning each proposed collection of information, including each proposed extension of an existing collection of information, before submitting the collection to OMB for approval. To comply with this requirement, FDA is publishing notice of the proposed collection of information set forth in this document.

With respect to the following collection of information, FDA invites comments on these topics: (1) Whether the proposed collection of information is necessary for the proper performance of FDA's functions, including whether the information will have practical utility; (2) the accuracy of FDA's estimate of the burden of the proposed collection of information, including the validity of the methodology and assumptions used; (3) ways to enhance the quality, utility, and clarity of the information to be collected; and (4) ways to minimize the burden of the collection of information on respondents, including through the use of automated collection techniques, when appropriate, and other forms of information technology.

Index of Legally Marketed Unapproved New Animal Drugs for Minor Species 21 CFR Part 516 (OMB Control Number 0910–0620)—Extension

Description: The Minor Use and Minor Species Animal Health Act of 2004 (MUMS Act) amended the Federal Food, Drug, and Cosmetic Act (the FD&C Act) to authorize FDA to establish new regulatory procedures intended to make more medications legally available to veterinarians and animal owners for the treatment of minor animal species (species other than cattle, horses, swine, chickens, turkeys, dogs, and cats), as well as uncommon diseases in major animal species.

The MUMS Act created three new sections to the FD&C Act (sections 571, 572, and 573), and this final rule implements section 572, which provides for an index of legally marketed unapproved new animal drugs for minor species. Participation in any part of the MUMS program is optional so the associated paperwork only applies to those who choose to participate. The final rule specifies, among other things, the criteria and procedures for requesting eligibility for indexing and for requesting addition to the index as well as the annual reporting requirements for index holders.

Under subpart C of part 516, § 516.119 provides requirements for naming a permanent resident U.S. agent by foreign drug companies, and § 516.121 provides for informational meetings with FDA. Section 516.123 provides requirements for requesting informal conferences regarding Agency administrative actions and § 516.125 provides for investigational use of new animal drugs intended for indexing. Provisions for requesting a determination of eligibility for indexing can be found under § 516.129 and provisions for subsequent requests for addition to the index can be found under § 516.145. A description of the written report required in § 516.145 can be found under § 516.143. Under § 516.141 are provisions for drug companies to nominate a qualified expert panel as well as the panel's recordkeeping requirements. This section also calls for the submission of a written conflict of interest statement to FDA by each proposed panel member. Index holders are able to modify their index listing under § 516.161 or change drug ownership under § 516.163. Requirements for records and reports are under § 516.165.

Description of Respondents: Pharmaceutical companies that sponsor new animal drugs. FDA estimates the burden for this collection of information as follows:

TABLE 1—ESTIMATED ANNUAL REPORTING BURDEN [1]

21 CFR section	Number of respondents	Number of responses per respondent	Total annual responses	Average burden per response	Total hours
516.119	2	1	2	1	2
516.121	30	2	60	4	240
516.123	3	1	3	8	24
516.125	2	3	6	20	120
516.129	30	2	60	20	1200
516.141	20	1	20	16	320
516.143	20	1	20	120	2400
516.145	20	1	20	20	400
516.161	1	1	1	4	4
516.163	1	1	1	2	2
516.165	10	2	20	8	160
Total					4,872

[1] There is no capital or operating and maintenance cost associated with this collection of information.

TABLE 2—ESTIMATED ANNUAL RECORDKEEPING BURDEN [1]

21 CFR section	Number of recordkeepers	Number of records per recordkeeper	Total annual records	Average burden per recordkeeping	Total hours
516.141	30	2	60	[2] 0.5	30
516.165	10	2	20	1	20
Total					50

[1] There is no capital or operating and maintenance cost associated with this collection of information.
[2] 30 minutes.

Dated: April 1, 2014.

Leslie Kux,

Assistant Commissioner for Policy.

[FR Doc. 2014–07708 Filed 4–4–14; 8:45 am]

BILLING CODE 4160–01–P

DEPARTMENT OF HEALTH AND HUMAN SERVICES

Food and Drug Administration

[Docket No. FDA–2014–N–0345]

Agency Information Collection Activities; Proposed Collection; Comment Request; Data To Support Drug Product Communications as Used by the Food and Drug Administration

AGENCY: Food and Drug Administration, HHS.

ACTION: Notice.

SUMMARY: The Food and Drug Administration (FDA) is announcing an opportunity for public comment on the proposed collection of certain information by the Agency. Under the Paperwork Reduction Act of 1995 (the PRA), Federal Agencies are required to publish notice in the **Federal Register** concerning each proposed collection of information, including each proposed extension of an existing collection of information, and to allow 60 days for public comment in response to the notice. This notice solicits comments on a generic clearance to collect information to support communications used by FDA about drug products.

DATES: Submit either electronic or written comments on the collection of information by June 6, 2014.

ADDRESSES: Submit electronic comments on the collection of information to *http://www.regulations.gov.* Submit written comments on the collection of information to the Division of Dockets Management (HFA 305), Food and Drug Administration, 5630 Fishers Lane, Rm. 1061, Rockville, MD 20852. All comments should be identified with the docket number found in brackets in the heading of this document.

FOR FURTHER INFORMATION CONTACT: FDA PRA Staff, Office of Operations, Food and Drug Administration, 1350 Piccard Dr., PI50–400B, Rockville, MD 20850, *PRAStaff@fda.hhs.gov.*

SUPPLEMENTARY INFORMATION: Under the PRA (44 U.S.C. 3501–3520), Federal Agencies must obtain approval from the Office of Management and Budget (OMB) for each collection of information they conduct or sponsor. ''Collection of information'' is defined in 44 U.S.C. 3502(3) and 5 CFR 1320.3(c) and includes Agency requests or requirements that members of the public submit reports, keep records, or provide information to a third party. Section 3506(c)(2)(A) of the PRA (44 U.S.C. 3506(c)(2)(A)) requires Federal Agencies to provide a 60-day notice in the **Federal Register** concerning each proposed collection of information, including each proposed extension of an existing collection of information, before submitting the collection to OMB for approval. To comply with this requirement, FDA is publishing notice of the proposed collection of information set forth in this document.

With respect to the following collection of information, FDA invites comments on these topics: (1) Whether the proposed collection of information is necessary for the proper performance of FDA's functions, including whether the information will have practical utility; (2) the accuracy of FDA's estimate of the burden of the proposed collection of information, including the validity of the methodology and assumptions used; (3) ways to enhance the quality, utility, and clarity of the information to be collected; and (4) ways to minimize the burden of the collection of information on respondents, including through the use of automated collection techniques, when appropriate, and other forms of information technology.

Data To Support Drug Product Communications as Used by the Food and Drug Administration—(OMB Control Number 0910–0695)—Extension

Testing of communication messages in advance of a communication campaign provides an important role in improving FDA communications as they allow for an in-depth understanding of individuals' attitudes, beliefs, motivations, and feelings. The methods to be employed include individual in-depth interviews, general public focus group interviews, intercept interviews, self-administered surveys, gatekeeper surveys, and professional clinician focus group interviews. The methods to be used serve the narrowly defined need for direct and informal opinion on a specific topic and, as a qualitative research tool, have two major purposes:

(1) To obtain information that is useful for developing variables and measures for formulating the basic objectives of risk communication campaigns; and

(2) To assess the potential effectiveness of messages and materials in reaching and successfully communicating with their intended audiences.

FDA will use these methods to test and refine its ideas and to help develop messages and other communications but will generally conduct further research before making important decisions, such as adopting new policies and allocating or redirecting significant resources to support these policies.

FDA will use this mechanism to test messages about regulated drug products on a variety of subjects related to consumer, patient, or health care professional perceptions and about use of drug products and related materials, including but not limited to, direct-to-consumer prescription drug promotion, physician labeling of prescription drugs, Medication Guides, over-the-counter drug labeling, emerging risk communications, patient labeling, online sale of medical products, and consumer and professional education.

Annually, FDA projects about 45 communication studies using the variety of test methods listed in this document. FDA is requesting this burden so as not to restrict the Agency's ability to gather information on public sentiment for its proposals in its regulatory and communications programs.

FDA estimates the burden of this collection of information as follows:

TABLE 1—ESTIMATED ANNUAL REPORTING BURDEN [1]

Activity	Number of respondents	Number of responses per respondent	Total annual responses	Average burden per response	Total hours
Interviews/Surveys	19,822	1	19,822	0.24 (14 minutes)	4,757

[1] There are no capital costs or operating and maintenance costs associated with this collection of information.

Dated: April 1, 2014.

Leslie Kux,

Assistant Commissioner for Policy.

[FR Doc. 2014–07705 Filed 4–4–14; 8:45 am]

BILLING CODE 4160–01–P

DEPARTMENT OF HEALTH AND HUMAN SERVICES

Food and Drug Administration

[Docket No. FDA–2011–N–0231]

Agency Information Collection Activities; Proposed Collection; Comment Request; Adverse Experience Reporting for Licensed Biological Products; and General Records

AGENCY: Food and Drug Administration, HHS.

ACTION: Notice.

SUMMARY: The Food and Drug Administration (FDA) is announcing an opportunity for public comment on the proposed collection of certain information by the Agency. Under the Paperwork Reduction Act of 1995 (the PRA), Federal Agencies are required to publish notice in the **Federal Register** concerning each proposed collection of information, including each proposed extension of an existing collection of information, and to allow 60 days for public comment in response to the notice. This notice solicits comments on the proposed extension of the collection of information concerning requirements relating to FDA's Adverse Experience Reporting System (AERS) for licensed biological products, and general records associated with the manufacture and distribution of biological products.

DATES: Submit either electronic or written comments on the collection of information by June 6, 2014.

ADDRESSES: Submit electronic comments on the collection of information to *http://www.regulations.gov.* Submit written comments on the collection of information to the Division of Dockets Management (HFA–305), Food and Drug Administration, 5630 Fishers Lane, Rm. 1061, Rockville, MD 20852. All comments should be identified with the docket number found in brackets in the heading of this document.

FOR FURTHER INFORMATION CONTACT: FDA PRA Staff, Office of Operations, Food and Drug Administration, 1350 Piccard Dr., PI50–400B, Rockville, MD 20850, *PRAStaff@fda.hhs.gov.*

SUPPLEMENTARY INFORMATION: Under the PRA (44 U.S.C. 3501–3520), Federal Agencies must obtain approval from the Office of Management and Budget (OMB) for each collection of information they conduct or sponsor. ''Collection of information'' is defined in 44 U.S.C. 3502(3) and 5 CFR 1320.3(c) and includes Agency requests or requirements that members of the public submit reports, keep records, or provide information to a third party. Section 3506(c)(2)(A) of the PRA (44 U.S.C. 3506(c)(2)(A)) requires Federal Agencies to provide a 60-day notice in the **Federal Register** concerning each proposed collection of information, including each proposed extension of an existing collection of information, before submitting the collection to OMB for approval. To comply with this requirement, FDA is publishing notice of the proposed collection of information set forth in this document.

With respect to the following collection of information, FDA invites comments on these topics: (1) Whether the proposed collection of information is necessary for the proper performance of FDA's functions, including whether the information will have practical utility; (2) the accuracy of FDA's estimate of the burden of the proposed collection of information, including the validity of the methodology and assumptions used; (3) ways to enhance the quality, utility, and clarity of the information to be collected; and (4) ways to minimize the burden of the collection of information on respondents, including through the use of automated collection techniques when appropriate, and other forms of information technology.

Adverse Experience Reporting for Licensed Biological Products; and General Records—21 CFR Part 600—(OMB Control Number 0910–0308)—Extension

Under the Public Health Service Act (42 U.S.C. 262), FDA may only approve a biologics license application for a biological product that is safe, pure, and potent. When a biological product is approved and enters the market, the product is introduced to a larger patient population in settings different from clinical trials. New information generated during the postmarketing period offers further insight into the benefits and risks of the product, and evaluation of this information is important to insure its safe use. FDA issued the Adverse Experience Reporting (AER) requirements in part 600 (21 CFR part 600) to enable FDA to take actions necessary for the protection of the public health in response to reports of adverse experiences related to licensed biological products. The primary purpose of FDA's AER system is to identify potentially serious safety problems with licensed biological products. Although premarket testing discloses a general safety profile of a biological product's comparatively common adverse effects, the larger and more diverse patient populations exposed to the licensed biological product provides the opportunity to collect information on rare, latent, and long-term effects. In addition, production and/or distribution problems have contaminated biological products in the past. AER reports are obtained from a variety of sources, including manufacturers, patients, physicians, foreign regulatory agencies, and clinical investigators. Identification of new and unexpected safety issues through the analysis of the data in AERS contributes directly to increased public health protection. For example, evaluation of these safety issues enables FDA to take focused regulatory action. Such action may include, but is not limited to, important changes to the product's labeling (such as adding a new warning), coordination with manufacturers to ensure adequate corrective action is taken, and removal of a biological product from the market when necessary.

Section 600.80(c)(1) requires licensed manufacturers or any person whose name appears on the label of a licensed biological product to report each adverse experience that is both serious and unexpected, whether foreign or domestic, as soon as possible but in no case later than 15 calendar days of initial receipt of the information by the licensed manufacturer. These reports are known as postmarketing 15-day Alert reports. This section also requires licensed manufacturers to submit any followup reports within 15 calendar days of receipt of new information or as requested by FDA, and if additional information is not obtainable, to maintain records of the unsuccessful steps taken to seek additional information. In addition, this section requires a person who submits an adverse action report to the licensed manufacturer, rather than FDA, to maintain a record of this action. Section 600.80(e) requires licensed manufacturers to submit a 15-day Alert report for an adverse experience obtained from a postmarketing clinical study only if the licensed manufacturer concludes that there is a reasonable possibility that the product caused the adverse experience. Section 600.80(c)(2) requires licensed manufacturers to report each adverse experience not reported in a postmarketing 15-day Alert report at quarterly intervals, for 3

years from the date of issuance of the biologics license, and then at annual intervals. The majority of these periodic reports are submitted annually since a large percentage of currently licensed biological products have been licensed longer than 3 years. Section 600.80(i) requires licensed manufacturers to maintain for a period of 10 years records of all adverse experiences known to the licensed manufacturer, including raw data and any correspondence relating to the adverse experiences. Section 600.81 requires licensed manufacturers to submit, at an interval of every 6 months, information about the quantity of the product distributed under the biologics license, including the quantity distributed to distributors. These distribution reports provide FDA with important information about products distributed under biologics licenses, including the quantity, certain lot numbers, labeled date of expiration, the fill lot numbers for the total number of dosage units of each strength or potency distributed (e.g., 50,000 per 10-milliliter vials), and date of release. FDA may require the licensed manufacturer to submit distribution reports under this section at times other than every 6 months. Under § 600.90, a licensed manufacturer may submit a waiver request for any requirements that apply to the licensed manufacturer under §§ 600.80 and 600.81. A waiver request submitted under § 600.90 must include supporting documentation.

Manufacturers of biological products for human use must keep records of each step in the manufacture and distribution of a product including any recalls. These recordkeeping requirements serve preventative and remedial purposes by establishing accountability and traceability in the manufacture and distribution of products. These requirements also enable FDA to perform meaningful inspections. Section 600.12 requires, among other things, that records must be made concurrently with the performance of each step in the manufacture and distribution of products. These records must be retained for no less than 5 years after the records of manufacture have been completed or 6 months after the latest expiration date for the individual product, whichever represents a later date. In addition, under § 600.12, manufacturers must maintain records relating to the sterilization of equipment and supplies, animal necropsy records, and records in cases of divided manufacturing responsibility with respect to a product. Under § 600.12(b)(2), manufacturers are also required to maintain complete records pertaining to the recall from distribution of any product. Furthermore, § 610.18(b) requires, in part, that the results of all periodic tests for verification of cultures and determination of freedom from extraneous organisms be recorded and maintained. The recordkeeping requirements for §§ 610.12(g), 610.13(a)(2), 610.18(d), 680.2(f) and 680.3(f) are approved under OMB control number 0910–0139.

Respondents to this collection of information include manufacturers of biological products and any person whose name appears on the label of a licensed biological product. In table 1, the number of respondents is based on the estimated number of manufacturers that are subject to those regulations or that submitted the required information to the Center for Biologics Evaluation and Research and Center for Drugs Evaluation and Research, FDA, in fiscal year (FY) 2013. Based on information obtained from FDA's database system, there were 131 licensed biologics manufacturers. This number excludes those manufacturers who produce Whole Blood or components of Whole Blood and in vitro diagnostic licensed products, because of the exemption under § 600.80(k). The total annual responses are based on the number of submissions received by FDA in FY 2013. There were an estimated 92,470 15-day Alert reports, 132,667 periodic reports, and 334 lot distribution reports submitted to FDA. The number of 15-day Alert reports for postmarketing studies under § 600.80(e) is included in the total number of 15-day Alert reports. FDA received 64 requests from 35 manufacturers for waivers under § 600.90, of which 63 were granted. The hours per response are based on FDA experience. The burden hours required to complete the MedWatch Form for § 600.80(c)(1), (e), and (f) are reported under OMB control number 0910–0291.

FDA estimates the burden of this collection of information as follows:

TABLE 1—ESTIMATED ANNUAL REPORTING BURDEN [1]

21 CFR Section	Number of respondents	Number of responses per respondent	Total annual responses	Average burden per response	Total hours
600.80(c)(1) and 600.80(e)	131	705.88	92,470	1	92,470
600.80(c)(2)	131	1,012.73	132,667	28	3,714,676
600.81	131	2.55	334	1	334
600.90	35	1.83	64	1	64
Total					3,807,544

[1]There are no capital costs or operating and maintenance costs associated with this collection of information.

In table 2, the number of respondents is based on the number of manufacturers subject to those regulations. Based on information obtained from FDA's database system, there were 334 licensed manufacturers of biological products in FY 2013. However, the number of recordkeepers listed for § 600.12(a) through (e) excluding (b)(2) is estimated to be 164. This number excludes manufacturers of blood and blood components because their burden hours for recordkeeping have been reported under § 606.160 in OMB control number 0910–0116. The total annual records is based on the annual average of lots released in FY 2013 (6,887), number of recalls made (1,679), and total number of adverse experience reports received (225,137) in FY 2013. The hours per record are based on FDA experience.

FDA estimates the burden of this recordkeeping as follows:

TABLE 2—ESTIMATED ANNUAL RECORDKEEPING BURDEN[1]

21 CFR Section	Number of recordkeepers	Number of records per recordkeeper	Total annual records	Average burden per recordkeeping	Total hours
600.12[2]	164	41.99	6,887	32	220,384
600.12(b)(2)	334	5.03	1,679	24	40,296
600.80(c)(1) and 600.80(i)	131	1,718.60	225,137	1	225,137
Total					485,817

[1]There are no capital costs or operating and maintenance costs associated with this collection of information.
[2]The recordkeeping requirements in § 610.18(b) are included in the estimate for § 600.12.

Dated: April 1, 2014.

Leslie Kux,

Assistant Commissioner for Policy.

[FR Doc. 2014–07711 Filed 4–4–14; 8:45 am]

BILLING CODE 4160–01–P

DEPARTMENT OF HEALTH AND HUMAN SERVICES

Food and Drug Administration

[Docket No. FDA–2014–N–0341]

Agency Information Collection Activities; Proposed Collection; Comment Request; Guidance for Industry on Updating Labeling for Susceptibility Test Information in Systemic Antibacterial Drug Products and Antimicrobial Susceptibility Testing Devices

AGENCY: Food and Drug Administration, HHS.

ACTION: Notice.

SUMMARY: The Food and Drug Administration (FDA) is announcing an opportunity for public comment on the proposed collection of certain information by the Agency. Under the Paperwork Reduction Act of 1995 (the PRA), Federal Agencies are required to publish notice in the **Federal Register** concerning each proposed collection of information, including each proposed extension of an existing collection of information, and to allow 60 days for public comment in response to the notice. This notice solicits comments on FDA's ''Guidance for Industry on Updating Labeling for Susceptibility Test Information in Systemic Antibacterial Drug Products and Antimicrobial Susceptibility Testing Devices.'' The guidance describes procedures and responsibilities for updating information on susceptibility test interpretive criteria, susceptibility test methods, and quality control parameters in the labeling for systemic antibacterial drug products for human use, and also describes procedures for making corresponding changes to susceptibility test interpretive criteria for antimicrobial susceptibility testing devices.

DATES: Submit either electronic or written comments on the collection of information by June 6, 2014.

ADDRESSES: Submit electronic comments on the collection of information to *http://www.regulations.gov*. Submit written comments on the collection of information to the Division of Dockets Management (HFA 305), Food and Drug Administration, 5630 Fishers Lane, Rm. 1061, Rockville, MD 20852. All comments should be identified with the docket number found in brackets in the heading of this document.

FOR FURTHER INFORMATION CONTACT: FDA PRA Staff, Office of Operations, Food and Drug Administration, 1350 Piccard Dr., PI50–400B, Rockville, MD 20850, *PRAStaff@fda.hhs.gov*.

SUPPLEMENTARY INFORMATION: Under the PRA (44 U.S.C. 3501–3520), Federal Agencies must obtain approval from the Office of Management and Budget (OMB) for each collection of information they conduct or sponsor. ''Collection of information'' is defined in 44 U.S.C. 3502(3) and 5 CFR 1320.3(c) and includes Agency requests or requirements that members of the public submit reports, keep records, or provide information to a third party. Section 3506(c)(2)(A) of the PRA (44 U.S.C. 3506(c)(2)(A)) requires Federal Agencies to provide a 60-day notice in the **Federal Register** concerning each proposed collection of information, including each proposed extension of an existing collection of information, before submitting the collection to OMB for approval. To comply with this requirement, FDA is publishing notice of the proposed collection of information set forth in this document.

With respect to the following collection of information, FDA invites comments on these topics: (1) Whether the proposed collection of information is necessary for the proper performance of FDA's functions, including whether the information will have practical utility; (2) the accuracy of FDA's estimate of the burden of the proposed collection of information, including the validity of the methodology and assumptions used; (3) ways to enhance the quality, utility, and clarity of the information to be collected; and (4) ways to minimize the burden of the collection of information on respondents, including through the use of automated collection techniques, when appropriate, and other forms of information technology.

Guidance for Industry on Updating Labeling for Susceptibility Test Information in Systemic Antibacterial Drug Products and Antimicrobial Susceptibility Testing Devices—(OMB Control Number 0910–0638)—Extension

The Food and Drug Administration Amendments Act of 2007 (FDAAA) includes a requirement that FDA identify and periodically update susceptibility test interpretive criteria for antibacterial drug products and make those findings publicly available. As a result of this provision, the guidance explains the importance of making available to health care providers the most current information regarding susceptibility test interpretive criteria for antibacterial drug products. To address concerns about antibacterial drug product labeling with out-of-date information on susceptibility test interpretive criteria, quality control parameters, and susceptibility test methods, the guidance describes procedures for FDA, applications holders, and antimicrobial susceptibility testing device manufacturers to ensure that updated susceptibility test information is available to health care providers. Where appropriate, FDA will identify susceptibility test interpretive criteria, quality control parameters, and susceptibility test methods by recognizing annually, in a **Federal Register** notice, standards developed by one or more nationally or internationally recognized standard development organizations. FDA recognized standards will be available to application holders of approved

antibacterial drug products for updating their product labeling.

Application holders can use one of the following approaches to meet their responsibilities to update their product labeling under the guidance and FDA regulations: Submit a labeling supplement that relies upon a standard recognized by FDA in a **Federal Register** notice or submit a labeling supplement that includes data supporting a proposed change to the microbiology information in the labeling. In addition, application holders should include in their annual report an assessment of whether the information in the ''Microbiology'' subsection of their product labeling is current or whether changes are needed. This information collection is already approved by OMB under control number 0910–0572 (the requirement in 21 CFR 201.56(a)(2) to update labeling when new information becomes available that causes the labeling to become inaccurate, false, or misleading) and control number 0910–0001 (the requirement in 21 CFR 314.70(b)(2)(v) to submit labeling supplements for certain changes in the product's labeling and the requirement in 21 CFR 314.81(b)(2)(i) to include in the annual report a brief summary of significant new information from the previous year that might affect the labeling of the drug product).

In addition, under the guidance, if the information in the applicant's product labeling differs from the standards recognized by FDA in the **Federal Register** notice, and the applicant believes that changes to the labeling are not needed, the applicant should provide written justification to FDA why the recognized standard does not apply to its drug product and why changes are not needed to the ''Microbiology'' subsection of the product's labeling. This justification should be submitted as general correspondence to the product's application, and a statement indicating that no change is currently needed and the supporting justification should be included in the annual report. Based on our knowledge of the need to update information on susceptibility test interpretive criteria, susceptibility test methods, and quality control parameters in the labeling for systemic antibacterial drug products for human use, and our experience with the FDAAA requirement and the guidance recommendations during the past 16 months, we estimate that, annually, approximately two applicants will submit the written justification described previously and in the guidance, and that each justification will take approximately 16 hours to prepare and submit to FDA as general correspondence and as part of the annual report.

FDA estimates the burden of this collection of information as follows:

TABLE 1—ESTIMATED ANNUAL REPORTING BURDEN [1]

Activity	Number of respondents	Number of responses per respondent	Total annual responses	Average burden per response	Total hours
Justification Submitted as General Correspondence and in the Annual Report	2	1	2	16	32

[1] There are no capital costs or operating and maintenance costs associated with this collection of information.

Dated: April 1, 2014.

Leslie Kux,

Assistant Commissioner for Policy.

[FR Doc. 2014–07704 Filed 4–4–14; 8:45 am]

BILLING CODE 4160–01–P

DEPARTMENT OF HEALTH AND HUMAN SERVICES

Food and Drug Administration

[Docket No. FDA–2014–N–0339]

Proposed Risk-Based Regulatory Framework and Strategy for Health Information Technology Report; Notice to Public of Availability of the Report and Web Site Location; Request for Comments

AGENCY: Food and Drug Administration, HHS.

ACTION: Notice; request for comments.

SUMMARY: The Food and Drug Administration (FDA or the Agency) is announcing the availability of the report and Web site location where the Agency has posted the report entitled ''Food and Drug Administration Safety and Innovation Act (FDASIA) Health IT Report: Proposed Risk Based Regulatory Framework.'' In addition, FDA has established a docket where stakeholders may provide comments.

DATES: Submit either electronic or written comments by July 7, 2014.

ADDRESSES: Submit electronic comments on this document to *http://www.regulations.gov.* Submit written comments to the Division of Dockets Management (HFA–305), Food and Drug Administration, 5630 Fishers Lane, Rm. 1061, Rockville, MD 20852. Identify comments with the docket number found in brackets in the heading of this document.

FOR FURTHER INFORMATION CONTACT: Bakul Patel, Center for Devices and Radiological Health, Food and Drug Administration, 10903 New Hampshire Ave., Bldg. 66, Rm. 5456, Silver Spring, MD, 301–796–5528, *Bakul.patel@fda.hhs.gov.*

SUPPLEMENTARY INFORMATION:

I. Background

The Food and Drug Administration Safety and Innovation Act (FDASIA) (Pub. L. 112–144) became law on July 9, 2012. Section 618 of FDASIA requires that FDA, in consultation with the Office of the National Coordinator for Health Information Technology (ONC) and the Federal Communication Commission (FCC), develop and post on their respective Web sites ''a report that contains a proposed strategy and recommendations on an appropriate, risk-based regulatory framework pertaining to health information technology (IT), including mobile medical applications, that promotes innovation, protects patient safety, and avoids regulatory duplication.'' This ''FDASIA Health IT Report: Proposed Risk Based Regulatory Framework'' report fulfills that requirement.

This notice announces the availability and Web site location of ''FDASIA Health IT Report: Proposed Risk Based Regulatory Framework.'' FDA, ONC, and FCC invite interested persons to submit comments on this report. We have established a docket where comments may be submitted (see **ADDRESSES**). We believe this docket is an important tool for receiving feedback on this report from interested parties and for sharing this information with the public. To access ''FDASIA Health IT Report: Proposed Risk Based Regulatory Framework,'' visit FDA's Web site *http://www.fda.gov/AboutFDA/CentersOffices/OfficeofMedicalProductsandTobacco/CDRH/CDRHReports/ucm390588.htm* or

ONC's Web site, *www.healthit.gov/FDASIA.*

II. Request for Comments

Interested persons may submit either electronic comments regarding this document to *http://www.regulations.gov* or written comments to the Division of Dockets Management (see **ADDRESSES**). It is only necessary to send one set of comments. Identify comments with the docket number found in brackets in the heading of this document. Received comments may be seen in the Division of Dockets Management between 9 a.m. and 4 p.m., Monday through Friday, and will be posted to the docket at *http://www.regulations.gov.*

Dated: April 1, 2014.

Leslie Kux,

Assistant Commissioner for Policy.

[FR Doc. 2014–07658 Filed 4–4–14; 8:45 am]

BILLING CODE 4160–01–P

DEPARTMENT OF HEALTH AND HUMAN SERVICES

Food and Drug Administration

Docket No. FDA–2012–E–0490]

Determination of Regulatory Review Period for Purposes of Patent Extension; MELAFIND SYSTEM

AGENCY: Food and Drug Administration, HHS.

ACTION: Notice.

SUMMARY: The Food and Drug Administration (FDA) has determined the regulatory review period for MELAFIND SYSTEM and is publishing this notice of that determination as required by law. FDA has made the determination because of the submission of an application to the Director of Patents and Trademarks, Department of Commerce, for the extension of a patent which claims that medical device.

ADDRESSES: Submit electronic comments to *http://www.regulations.gov.* Submit written petitions (two copies are required) and written comments to the Division of Dockets Management (HFA–305), Food and Drug Administration, 5630 Fishers Lane, Rm. 1061, Rockville, MD 20852. Submit petitions electronically to *http://www.regulations.gov* at Docket No. FDA–2013–S–0610.

FOR FURTHER INFORMATION CONTACT: Beverly Friedman, Office of Management, Center for Drug Evaluation and Research, Food and Drug Administration, 10903 New Hampshire Ave., Bldg. 51, Rm. 6257, Silver Spring, MD 20993–0002, 301–796–3602.

SUPPLEMENTARY INFORMATION: The Drug Price Competition and Patent Term Restoration Act of 1984 (Pub. L. 98–417) and the Generic Animal Drug and Patent Term Restoration Act (Pub. L. 100–670) generally provide that a patent may be extended for a period of up to 5 years so long as the patented item (human drug product, animal drug product, medical device, food additive, or color additive) was subject to regulatory review by FDA before the item was marketed. Under these acts, a product's regulatory review period forms the basis for determining the amount of extension an applicant may receive.

A regulatory review period consists of two periods of time: A testing phase and an approval phase. For medical devices, the testing phase begins with a clinical investigation of the device and runs until the approval phase begins. The approval phase starts with the initial submission of an application to market the device and continues until permission to market the device is granted. Although only a portion of a regulatory review period may count toward the actual amount of extension that the Director of Patents and Trademarks may award (half the testing phase must be subtracted as well as any time that may have occurred before the patent was issued), FDA's determination of the length of a regulatory review period for a medical device will include all of the testing phase and approval phase as specified in 35 U.S.C. 156(g)(3)(B).

FDA has approved for marketing the medical device MELAFIND SYSTEM. MELAFIND SYSTEM is indicated for use on clinically atypical cutaneous pigmented lesions with one or more clinical or historical characteristics of melanoma, excluding those with a clinical diagnosis of melanoma or likely melanoma. Subsequent to this approval, the Patent and Trademark Office received a patent term restoration application for MELAFIND SYSTEM (U.S. Patent No. 6,208,749) from MELA Sciences Inc., and the Patent and Trademark Office requested FDA's assistance in determining this patent's eligibility for patent term restoration. In a letter dated August 10, 2012, FDA advised the Patent and Trademark Office that this medical device had undergone a regulatory review period and that the approval of MELAFIND SYSTEM represented the first permitted commercial marketing or use of the product. Thereafter, the Patent and Trademark Office requested that the FDA determine the product's regulatory review period.

FDA has determined that the applicable regulatory review period for MELAFIND SYSTEM is 3,837 days. Of this time, 2,961 days occurred during the testing phase of the regulatory review period, while 876 days occurred during the approval phase. These periods of time were derived from the following dates:

1. *The date an exemption under section 520(g) of the Federal Food, Drug, and Cosmetic Act (the FD&C Act) (21 U.S.C. 360j(g)) involving this device became effective, or, if an investigational device exemption (IDE) was not required, but institutional review board (IRB) approval is required, under section 520(g)(3) of the FD&C Act, the IRB approval date:* May 2, 2001. The applicant claims there was no IDE submitted under section 520(g) of the FD&C Act and claims the date that IRB-required approval was effective was May 2, 2001. FDA concurs that no IDE was submitted and that the IRB approval action was enacted May 2, 2001, according to the certificate of approval substantiating IRB approval date provided in the application for patent term extension.

2. *The date an application was initially submitted with respect to the device under section 515 of the the FD&C Act (21 U.S.C. 360e):* June 9, 2009. FDA has verified the applicant's claim that the premarket approval application (PMA) for MELAFIND SYSTEM (PMA P090012) was initially submitted June 9, 2009.

3. *The date the application was approved:* November 1, 2011. FDA has verified the applicant's claim that PMA P090012 was approved on November 1, 2011.

This determination of the regulatory review period establishes the maximum potential length of a patent extension. However, the U.S. Patent and Trademark Office applies several statutory limitations in its calculations of the actual period for patent extension. In its application for patent extension, this applicant seeks 2,355 days of patent term extension.

Anyone with knowledge that any of the dates as published are incorrect may submit to the Division of Dockets Management (see **ADDRESSES**) either electronic or written comments and ask for a redetermination by June 6, 2014. Furthermore, any interested person may petition FDA for a determination regarding whether the applicant for extension acted with due diligence during the regulatory review period by October 6, 2014. To meet its burden, the petition must contain sufficient facts to

merit an FDA investigation. (See H. Rept. 857, part 1, 98th Cong., 2d sess., pp. 41–42, 1984.) Petitions should be in the format specified in 21 CFR 10.30.

Interested persons may submit to the Division of Dockets Management (see **ADDRESSES**) electronic or written comments and written or electronic petitions. It is only necessary to send one set of comments. Identify comments with the docket number found in brackets in the heading of this document. If you submit a written petition, two copies are required. A petition submitted electronically must be submitted to *http://www.regulations.gov,* Docket No. FDA–2013–S–0610. Comments and petitions that have not been made publicly available on *http://www.regulations.gov* may be viewed in the Division of Dockets Management between 9 a.m. and 4 p.m., Monday through Friday.

Dated: March 27, 2014.

Leslie Kux,

Assistant Commissioner for Policy.

[FR Doc. 2014–07657 Filed 4–4–14; 8:45 am]

BILLING CODE 4160–01–P

DEPARTMENT OF HEALTH AND HUMAN SERVICES

Food and Drug Administration

[Docket No. FDA–2013–P–1199]

Determination That SKELAXIN (Metaxalone) Tablets, 400 Milligrams, Was Not Withdrawn From Sale for Reasons of Safety or Effectiveness

AGENCY: Food and Drug Administration, HHS.

ACTION: Notice.

SUMMARY: The Food and Drug Administration (FDA or the Agency) has determined that SKELAXIN (metaxalone) Tablets, 400 milligrams (mg), was not withdrawn from sale for reasons of safety or effectiveness. This determination will allow FDA to approve abbreviated new drug applications (ANDAs) for SKELAXIN (metaxalone) Tablets, 400 mg, if all other legal and regulatory requirements are met.

FOR FURTHER INFORMATION CONTACT: Na'Im R. Moses, Center for Drug Evaluation and Research, Food and Drug Administration, 10903 New Hampshire Ave., Bldg. 51, Rm. 6226, Silver Spring, MD 20993–0002, 240–402–3990.

SUPPLEMENTARY INFORMATION: In 1984, Congress enacted the Drug Price Competition and Patent Term Restoration Act of 1984 (Pub. L. 98–417) (the 1984 amendments), which authorized the approval of duplicate versions of drug products under an ANDA procedure. ANDA applicants must, with certain exceptions, show that the drug for which they are seeking approval contains the same active ingredient in the same strength and dosage form as the ''listed drug,'' which is a version of the drug that was previously approved. ANDA applicants do not have to repeat the extensive clinical testing otherwise necessary to gain approval of a new drug application (NDA).

The 1984 amendments include what is now section 505(j)(7) of the Federal Food, Drug, and Cosmetic Act (21 U.S.C. 355(j)(7)), which requires FDA to publish a list of all approved drugs. FDA publishes this list as part of the ''Approved Drug Products With Therapeutic Equivalence Evaluations,'' which is known generally as the ''Orange Book.'' Under FDA regulations, drugs are removed from the list if the Agency withdraws or suspends approval of the drug's NDA or ANDA for reasons of safety or effectiveness or if FDA determines that the listed drug was withdrawn from sale for reasons of safety or effectiveness (21 CFR 314.162).

A person may petition the Agency to determine, or the Agency may determine on its own initiative, whether a listed drug was withdrawn from sale for reasons of safety or effectiveness. This determination may be made at any time after the drug has been withdrawn from sale, but must be made prior to approving an ANDA that refers to the listed drug (§ 314.161 (21 CFR 314.161)). FDA may not approve an ANDA that does not refer to a listed drug.

SKELAXIN (metaxalone) Tablets, 400 mg, is the subject of NDA 13–217, held by King Pharmaceuticals, Inc., and initially approved on August 13, 1962. SKELAXIN (metaxalone) is indicated as an adjunct to rest, physical therapy, and other measures for the relief of discomforts associated with acute, painful musculoskeletal conditions.

The 400-mg dosage strength is currently listed in the ''Discontinued Drug Product List'' section of the Orange Book. The applicant continues to manufacture and distribute an 800-mg strength tablet of this drug product.

CorePharma, LLC, submitted a citizen petition dated September 19, 2013 (Docket No. FDA–2013–P–1199), under 21 CFR 10.30, requesting that the Agency determine whether SKELAXIN (metaxalone) Tablets, 400 mg, was withdrawn from sale for reasons of safety or effectiveness.

After considering the citizen petition and reviewing Agency records, and based on the information we have at this time, FDA has determined under § 314.161 that SKELAXIN (metaxalone) Tablets, 400 mg, was not withdrawn for reasons of safety or effectiveness. The petitioner has identified no data or other information suggesting that SKELAXIN (metaxalone) Tablets, 400 mg, was withdrawn for reasons of safety or effectiveness. We have carefully reviewed our files for records concerning the withdrawal of SKELAXIN (metaxalone) Tablets, 400 mg, from sale. We have also independently evaluated relevant literature and data for possible postmarketing adverse events. We have reviewed the available evidence and determined that the product was not withdrawn from sale for reasons of safety or effectiveness.

Accordingly, the Agency will continue to list SKELAXIN (metaxalone) Tablets, 400 mg, in the ''Discontinued Drug Product List'' section of the Orange Book. The ''Discontinued Drug Product List'' delineates, among other items, drug products that have been discontinued from marketing for reasons other than safety or effectiveness. ANDAs that refer to SKELAXIN (metaxalone) Tablets, 400 mg, may be approved by the Agency as long as they meet all other legal and regulatory requirements for the approval of ANDAs. If FDA determines that labeling for this drug product should be revised to meet current standards, the Agency will advise ANDA applicants to submit such labeling.

Dated: April 1, 2014.

Leslie Kux,

Assistant Commissioner for Policy.

[FR Doc. 2014–07659 Filed 4–4–14; 8:45 am]

BILLING CODE 4160–01–P

DEPARTMENT OF HEALTH AND HUMAN SERVICES

National Institutes of Health

National Institute on Aging; Notice of Closed Meeting

Pursuant to section 10(d) of the Federal Advisory Committee Act, as amended (5 U.S.C. App.), notice is hereby given of the following meeting.

The meeting will be closed to the public in accordance with the provisions set forth in sections 552b(c)(4) and 552b(c)(6), Title 5 U.S.C., as amended. The grant applications and the discussions could disclose confidential trade secrets or commercial property such as patentable material, and personal information concerning individuals associated with the grant

applications, the disclosure of which would constitute a clearly unwarranted invasion of personal privacy.

Name of Committee: National Institute on Aging Special Emphasis Panel; Loan Repayment.

Date: May 5, 2014.

Time: 2:00 p.m. To 5:00 p.m.

Agenda: To Review and Evaluate Grant Applications.

Place: National Institute on Aging, Gateway Building, Suite 2C212, 7201 Wisconsin Avenue, Bethesda, MD 20892, (Telephone Conference Call).

Contact Person: Bita Nakhai, Ph.D., Scientific Review Branch, National Institute on Aging, Gateway Bldg., 2C212, 7201 Wisconsin Avenue, Bethesda, MD 20814, 301–402–7701, *nakhaib@nia.nih.gov.*

(Catalogue of Federal Domestic Assistance Program Nos. 93.866, Aging Research, National Institutes of Health, HHS)

Dated: March 28, 2014.

David Clary,

Program Analyst, Office of Federal Advisory Committee Policy.

[FR Doc. 2014–07620 Filed 4–4–14; 8:45 am]

BILLING CODE 4140–01–P

DEPARTMENT OF HEALTH AND HUMAN SERVICES

National Institutes of Health

National Institute of Diabetes and Digestive and Kidney Diseases; Notice of Closed Meeting

Pursuant to section 10(d) of the Federal Advisory Committee Act, as amended (5 U.S.C. App.), notice is hereby given of the following meeting.

The meeting will be closed to the public in accordance with the provisions set forth in sections 552b(c)(4) and 552b(c)(6), Title 5 U.S.C., as amended. The grant applications and the discussions could disclose confidential trade secrets or commercial property such as patentable material, and personal information concerning individuals associated with the grant applications, the disclosure of which would constitute a clearly unwarranted invasion of personal privacy.

Name of Committee: National Institute of Diabetes and Digestive and Kidney Diseases Special Emphasis Panel; Time-Sensitive Obesity Applications.

Date: April 28, 2014.

Time: 10:00 a.m. to 12:00 p.m.

Agenda: To review and evaluate grant applications.

Place: National Institutes of Health, Two Democracy Plaza, 6707 Democracy Boulevard, Bethesda, MD 20892, (Telephone Conference Call).

Contact Person: Michele L. Barnard, Ph.D., Scientific Review Officer, Review Branch, DEA, NIDDK, National Institutes of Health, Room 753, 6707 Democracy Boulevard, Bethesda, MD 20892–2542, (301) 594–8898, *barnardm@extra.niddk.nih.gov.*

(Catalogue of Federal Domestic Assistance Program Nos. 93.847, Diabetes, Endocrinology and Metabolic Research; 93.848, Digestive Diseases and Nutrition Research; 93.849, Kidney Diseases, Urology and Hematology Research, National Institutes of Health, HHS)

Dated: March 28, 2014.

David Clary,

Program Analyst, Office of Federal Advisory Committee Policy.

[FR Doc. 2014–07621 Filed 4–4–14; 8:45 am]

BILLING CODE 4140–01–P

DEPARTMENT OF HEALTH AND HUMAN SERVICES

National Institutes of Health

Center for Scientific Review; Notice of Closed Meetings

Pursuant to section 10(d) of the Federal Advisory Committee Act, as amended (5 U.S.C. App.), notice is hereby given of the following meetings.

The meetings will be closed to the public in accordance with the provisions set forth in sections 552b(c)(4) and 552b(c)(6), Title 5 U.S.C., as amended. The grant applications and the discussions could disclose confidential trade secrets or commercial property such as patentable material, and personal information concerning individuals associated with the grant applications, the disclosure of which would constitute a clearly unwarranted invasion of personal privacy.

Name of Committee: Center for Scientific Review Special Emphasis Panel; Member Conflicts: Immunobiology.

Date: April 14, 2014.

Time: 10:00 a.m. to 8:00 p.m.

Agenda: To review and evaluate grant applications.

Place: National Institutes of Health, 6701 Rockledge Drive, Bethesda, MD 20892.

Contact Person: Stephen M. Nigida, Ph.D., Health Scientist Administrator, Center for Scientific Review, National Institutes of Health, 6701 Rockledge Drive, Room 4212, MSC 7812, Bethesda, MD 20892, 301–435–1222, *nigidas@csr.nih.gov.*

This notice is being published less than 15 days prior to the meeting due to the timing limitations imposed by the review and funding cycle.

Name of Committee: Center for Scientific Review Special Emphasis Panel; Member Conflict: AIDS and AIDS Related Research.

Date: April 14, 2014.

Time: 12:00 p.m. to 3:00 p.m.

Agenda: To review and evaluate grant applications.

Place: National Institutes of Health, 6701 Rockledge Drive, Bethesda, MD 20892. (Telephone Conference Call).

Contact Person: Jose H Guerrier, Ph.D., Scientific Review Officer, Center for Scientific Review, National Institutes of Health, 6701 Rockledge Drive, Room 5218, MSC 7852, Bethesda, MD 20892, 301–435–1137, *guerriej@csr.nih.gov.*

This notice is being published less than 15 days prior to the meeting due to the timing limitations imposed by the review and funding cycle.

Name of Committee: Center for Scientific Review Special Emphasis Panel; Member Conflict: Development of measures to determine successful hearing, Health care outcomes.

Date: April 24, 2014.

Time: 1:00 p.m. to 3:00 p.m.

Agenda: To review and evaluate grant applications.

Place: National Institutes of Health, 6701 Rockledge Drive, Bethesda, MD 20892, (Telephone Conference Call).

Contact Person: Lynn E Luethke, Ph.D., Scientific Review Officer, Center for Scientific Review, National Institutes of Health, 6701 Rockledge Drive, Room 5166, MSC 7844, Bethesda, MD 20892, (301) 806–3323, *luethkel@csr.nih.gov.*

(Catalogue of Federal Domestic Assistance Program Nos. 93.306, Comparative Medicine; 93.333, Clinical Research, 93.306, 93.333, 93.337, 93.393–93.396, 93.837–93.844, 93.846–93.878, 93.892, 93.893, National Institutes of Health, HHS)

Dated: April 1, 2014.

Michelle Trout,

Program Analyst, Office of Federal Advisory Committee Policy.

[FR Doc. 2014–07617 Filed 4–4–14; 8:45 am]

BILLING CODE 4140–01–P

DEPARTMENT OF HEALTH AND HUMAN SERVICES

National Institutes of Health

National Institute of Neurological Disorders and Stroke; Notice of Meeting

Pursuant to section 10(d) of the Federal Advisory Committee Act, as amended (5 U.S.C. App.), notice is hereby given of the National Advisory Neurological Disorders and Stroke Council.

The meeting will be open to the public as indicated below, with attendance limited to space available. Individuals who plan to attend and need special assistance, such as sign language interpretation or other reasonable accommodations, should notify the Contact Person listed below in advance of the meeting.

The meeting will be closed to the public in accordance with the provisions set forth in sections 552b(c)(4) and 552b(c)(6), Title 5 U.S.C., as amended. The grant applications and the discussions could disclose

confidential trade secrets or commercial property such as patentable materials, and personal information concerning individuals associated with the grant applications, the disclosure of which would constitute a clearly unwarranted invasion of personal privacy.

Name of Committee: National Advisory Neurological Disorders and Stroke Council.

Date: May 29–30, 2014.

Open: May 29, 2014, 8:00 a.m. to 3:00 p.m.

Agenda: Report by the Director, NINDS; Report by the Associate Director for Extramural Research; Administrative and Program Developments; and an Overview of the NINDS Intramural Program.

Place: National Institutes of Health, Building 31, 31 Center Drive, Conference Room 10, Bethesda, MD 20892

Closed: May 29, 2014, 3:00 p.m. to 4:45 p.m.

Agenda: To review and evaluate grant applications.

Place: National Institutes of Health, Building 31, 31 Center Drive, Conference Room 10, Bethesda, MD 20892.

Closed: May 29, 2014, 4:45 p.m. to 5:15 p.m.

Agenda: To review and evaluate the Division of Intramural Research Board of Scientific Counselors' Reports.

Place: National Institutes of Health, Building 31, 31 Center Drive, Conference Room 10, Bethesda, MD 20892.

Closed: May 30, 2014, 8:00 a.m. to 11:00 a.m.

Agenda: To review and evaluate grant applications.

Place: National Institutes of Health, Building 31, 31 Center Drive, Conference Room 10, Bethesda, MD 20892.

Contact Person: Robert Finkelstein, Ph.D., Associate Director for Extramural Research, National Institute of Neurological Disorders and Stroke, NIH, 6001 Executive Blvd., Suite 3309, MSC 9531, Bethesda, MD 20892, (301) 496–9248.

Any interested person may file written comments with the committee by forwarding the statement to the Contact Person listed on this notice. The statement should include the name, address, telephone number and when applicable, the business or professional affiliation of the interested person.

In the interest of security, NIH has instituted stringent procedures for entrance onto the NIH campus. All visitor vehicles, including taxicabs, hotel, and airport shuttles will be inspected before being allowed on campus. Visitors will be asked to show one form of identification (for example, a government-issued photo ID, driver's license, or passport) and to state the purpose of their visit.

Information is also available on the Institute's/Center's home page: *http://www.ninds.nih.gov,* where an agenda and any additional information for the meeting will be posted when available.

(Catalogue of Federal Domestic Assistance Program Nos. 93.853, Clinical Research Related to Neurological Disorders; 93.854, Biological Basis Research in the Neurosciences, National Institutes of Health, HHS).

Dated: March 31, 2014.

Carolyn Baum,

Program Analyst, Office of Federal Advisory Committee Policy.

[FR Doc. 2014–07619 Filed 4–4–14; 8:45 am]

BILLING CODE 4140–01–P

DEPARTMENT OF HEALTH AND HUMAN SERVICES

National Institutes of Health

National Heart, Lung, and Blood Institute; Notice of Closed Meetings

Pursuant to section 10(d) of the Federal Advisory Committee Act, as amended (5 U.S.C. App.), notice is hereby given of the following meetings.

The meetings will be closed to the public in accordance with the provisions set forth in sections 552b(c)(4) and 552b(c)(6), Title 5 U.S.C., as amended. The grant applications and contract proposals and the discussions could disclose confidential trade secrets or commercial property such as patentable material, and personal information concerning individuals associated with the grant applications or contract proposals, the disclosure of which would constitute a clearly unwarranted invasion of personal privacy.

Name of Committee: National Heart, Lung, and Blood Institute Special Emphasis Panel; Technologies to Assess Sleep Health Status in Populations.

Date: April 29, 2014.

Time: 11:30 a.m. to 1:30 p.m.

Agenda: To review and evaluate grant applications.

Place: National Institutes of Health, 6701 Rockledge Drive, Room 7182, Bethesda, MD 20892, (Telephone Conference Call).

Contact Person: Susan Wohler Sunnarborg, Ph.D. Scientific Review Officer, Office of Scientific Review/DERA, National, Heart, Lung, and Blood Institute, 6701 Rockledge Drive, Room 7182, Bethesda, MD 20892, *sunnarborgsw@nhlbi.nih.gov*.

Name of Committee: National Heart, Lung, and Blood Institute Special Emphasis Panel; NHLBI Loan Repayment Program.

Date: May 5, 2014.

Time: 8:00 a.m. to 5:00 p.m.

Agenda: To review and evaluate contract proposals.

Place: National Institutes of Health, 6701 Rockledge Drive, Room 7190, Bethesda, MD 20892, (Telephone Conference Call).

Contact Person: Keary A Cope, Ph.D., Scientific Review Officer, Office of Scientific Review/DERA, National Heart, Lung, and Blood Institute, 6701 Rockledge Drive, Room 7190, Bethesda, MD 20892–7924, 301–435–2222 *copeka@mail.nih.gov*.

(Catalogue of Federal Domestic Assistance Program Nos. 93.233, National Center for Sleep Disorders Research; 93.837, Heart and Vascular Diseases Research; 93.838, Lung Diseases Research; 93.839, Blood Diseases and Resources Research, National Institutes of Health, HHS)

Dated: April 1, 2014.

Michelle Trout,

Program Analyst, Office of Federal Advisory Committee Policy.

[FR Doc. 2014–07618 Filed 4–4–14; 8:45 am]

BILLING CODE 4140–01–P

DEPARTMENT OF HEALTH AND HUMAN SERVICES

National Institutes of Health

National Institute of Allergy and Infectious Diseases; Notice of Closed Meetings

Pursuant to section 10(d) of the Federal Advisory Committee Act, as amended (5 U.S.C. App.), notice is hereby given of the following meetings.

The meetings will be closed to the public in accordance with the provisions set forth in sections 552b(c)(4) and 552b(c)(6), Title 5 U.S.C., as amended. The grant applications and the discussions could disclose confidential trade secrets or commercial property such as patentable material, and personal information concerning individuals associated with the grant applications, the disclosure of which would constitute a clearly unwarranted invasion of personal privacy.

Name of Committee: National Institute of Allergy and Infectious Diseases Special Emphasis Panel; NIAID Investigator Initiated Program Research Resource (R24).

Date: April 28, 2014.

Time: 1:00 p.m. to 2:00 p.m.

Agenda: To review and evaluate grant applications.

Place: National Institutes of Health, 6700B Rockledge Drive, Bethesda, MD 20817, (Telephone Conference Call).

Contact Person: Dharmendar Rathore, Ph.D., Scientific Review Officer, Scientific Review Program, Division of Extramural Activities, National Institutes of Health/NIAID, 6700B Rockledge Drive, MSC 7616, Rm 3134, Bethesda, MD 20892, 301–435–2766, *rathored@mail.nih.gov.*

Name of Committee: National Institute of Allergy and Infectious Diseases Special Emphasis Panel; NIAID SEP for Institutional Research Training Grants (T32)

Date: April 30, 2014.

Time: 2:00 p.m. to 3:00 p.m.

Agenda: To review and evaluate grant applications.

Place: National Institutes of Health, 6700B Rockledge Drive, Bethesda, MD 20817, (Telephone Conference Call).

Contact Person: Frank S. De Silva, Ph.D., Scientific Review Officer, Scientific Review Program, Division of Extramural Activities, National Institutes of Health/NIAID, 6700B Rockledge Drive, MSC 7616, Bethesda, MD 20892–7616, 301–594–1009, *fdesilva@niaid.nih.gov.*

(Catalogue of Federal Domestic Assistance Program Nos. 93.855, Allergy, Immunology, and Transplantation Research; 93.856, Microbiology and Infectious Diseases Research, National Institutes of Health, HHS)

Dated: March 28, 2014.

David Clary,

Program Analyst, Office of Federal Advisory Committee Policy.

[FR Doc. 2014–07623 Filed 4–4–14; 8:45 am]

BILLING CODE 4140–01–P

DEPARTMENT OF HEALTH AND HUMAN SERVICES

National Institutes of Health

National Institute of Diabetes and Digestive and Kidney Diseases; Notice of Meetings

Pursuant to section 10(d) of the Federal Advisory Committee Act, as amended (5 U.S.C. App.), notice is hereby given of meetings of the National Diabetes and Digestive and Kidney Diseases Advisory Council.

The meetings will be open to the public as indicated below, with attendance limited to space available. Individuals who plan to attend and need special assistance, such as sign language interpretation or other reasonable accommodations, should notify the Contact Person listed below in advance of the meeting.

The meetings will be closed to the public in accordance with the provisions set forth in sections 552b(c)(4) and 552b(c)(6), Title 5 U.S.C., as amended. The grant applications and the discussions could disclose confidential trade secrets or commercial property such as patentable material, and personal information concerning individuals associated with the grant applications, the disclosure of which would constitute a clearly unwarranted invasion of personal privacy.

Name of Committee: National Diabetes and Digestive and Kidney Diseases Advisory Council.

Date: May 14, 2014.

Open: 8:30 a.m. to 12:00 p.m.

Agenda: To review the Division's scientific and planning activities.

Place: National Institutes of Health, Bldg. 31, ''C'' Wing, 6th Floor, Conference Room 10, 31 Center Drive, Bethesda, MD 20892.

Closed: 4:00 p.m. to 4:30 p.m.

Agenda: To review and evaluate grant applications.

Place: National Institutes of Health, Bldg. 31, ''C'' Wing, 6th Floor, Conference Room 10, 31 Center Drive, Bethesda, MD 20892.

Contact Person: Brent B. Stanfield, Ph.D., Director, Division Of Extramural Activities, National Institutes Of Diabetes And Digestive And Kidney Diseases, 6707 Democracy Blvd. Room 715, Msc 5452, Bethesda, MD 20892, (301) 594–8843, *stanfibr@niddk.nih.gov*.

Name of Committee: National Diabetes and Digestive and Kidney Diseases Advisory Council; Diabetes, Endocrinology and Metabolic Diseases Subcommittee.

Date: May 14, 2014.

Open: 2:00 p.m. to 4:00 p.m.

Agenda: To review the Division's scientific and planning activities.

Place: National Institutes of Health, Bldg. 31, ''C'' Wing, 6th Floor, Conference Room 10, 31 Center Drive, Bethesda, MD 20892.

Closed: 1:00 p.m. to 2:00 p.m.

Agenda: To review and evaluate grant applications.

Place: National Institutes of Health, Bldg. 31, ''C'' Wing, 6th Floor, Conference Room 10, 31 Center Drive, Bethesda, MD 20892.

Contact Person: Brent B. Stanfield, Ph.D., Director, Division Of Extramural Activities, National Institutes Of Diabetes And Digestive And Kidney Diseases, 6707 Democracy Blvd. Room 715, Msc 5452, Bethesda, MD 20892, (301) 594–8843, *stanfibr@niddk.nih.gov*.

Name of Committee: National Diabetes and Digestive and Kidney Diseases Advisory Council; Kidney, Urologic and Hematologic Diseases Subcommittee.

Date: May 14, 2014.

Open: 1:00 p.m. to 2:30 p.m.

Agenda: To review the Division's scientific and planning activities.

Place: National Institutes of Health, Bldg. 31, ''C'' Wing, 6th Floor, Conference Room 7, 31 Center Drive, Bethesda, MD 20892.

Closed: 2:30 p.m. to 4:00 p.m.

Agenda: To review and evaluate grant applications.

Place: National Institutes of Health, Bldg. 31, ''C'' Wing, 6th Floor, Conference Room 7, 31 Center Drive, Bethesda, MD 20892.

Contact Person: Brent B. Stanfield, Ph.D., Director, Division Of Extramural Activities, National Institutes Of Diabetes And Digestive And Kidney Diseases, 6707 Democracy Blvd. Room 715, Msc 5452, Bethesda, MD 20892, (301) 594–8843, *stanfibr@niddk.nih.gov*.

Name of Committee: National Diabetes and Digestive and Kidney Diseases Advisory Council; Digestive Diseases and Nutrition Subcommittee.

Date: May 14, 2014.

Open: 1:00 p.m. to 1:30 p.m.

Agenda: To review the Division's scientific and planning activities.

Place: National Institutes of Health, Bldg. 31, ''C'' Wing, 6th Floor, Conference Room 6, 31 Center Drive, Bethesda, MD 20892.

Closed: 1:45 p.m. to 4:00 p.m.

Agenda: To review and evaluate grant applications.

Place: National Institutes of Health, Bldg. 31, ''C'' Wing, 6th Floor, Conference Room 6, 31 Center Drive, Bethesda, MD 20892.

Contact Person: Brent B. Stanfield, Ph.D., Director, Division Of Extramural Activities, National Institutes Of Diabetes And Digestive And Kidney Diseases, 6707 Democracy Blvd. Room 715, Msc 5452, Bethesda, MD 20892, (301) 594–8843, *stanfibr@niddk.nih.gov*.

Any interested person may file written comments with the committee by forwarding the statement to the Contact Person listed on this notice. The statement should include the name, address, telephone number and when applicable, the business or professional affiliation of the interested person.

In the interest of security, NIH has instituted stringent procedures for entrance onto the NIH campus. All visitor vehicles, including taxicabs, hotel, and airport shuttles will be inspected before being allowed on campus. Visitors will be asked to show one form of identification (for example, a government-issued photo ID, driver's license, or passport) and to state the purpose of their visit.

Information is also available on the Institute's/Center's home page: *www.niddk.nih.gov/fund/divisions/DEA/Council/coundesc.htm.*, where an agenda and any additional information for the meeting will be posted when available.

(Catalogue of Federal Domestic Assistance Program Nos. 93.847, Diabetes, Endocrinology and Metabolic Research; 93.848, Digestive Diseases and Nutrition Research; 93.849, Kidney Diseases, Urology and Hematology Research, National Institutes of Health, HHS)

Dated: March 28, 2014.

David Clary,

Program Analyst, Office of Federal Advisory Committee Policy.

[FR Doc. 2014–07622 Filed 4–4–14; 8:45 am]

BILLING CODE 4140–01–P

DEPARTMENT OF HOMELAND SECURITY

Coast Guard

[USCG–2014–0151]

Information Collection Request to Office of Management and Budget

AGENCY: Coast Guard, DHS.

ACTION: Sixty-day notice requesting comments.

SUMMARY: In compliance with the Paperwork Reduction Act of 1995, the U.S. Coast Guard intends to submit an Information Collection Request (ICRs) to the Office of Management and Budget (OMB), Office of Information and Regulatory Affairs (OIRA), requesting approval of a revision to the following collection of information: 1625–0036, Plan Approval and Records for U.S. and Foreign Tank Vessels Carrying Oil in Bulk. Our ICR describes the information we seek to collect from the public. Before submitting this ICR to OIRA, the Coast Guard is inviting comments as described below.

DATES: Comments must reach the Coast Guard on or before June 6, 2014.

ADDRESSES: You may submit comments identified by Coast Guard docket number [USCG–2014–0151] to the Docket Management Facility (DMF) at the U.S. Department of Transportation (DOT). To avoid duplicate submissions, please use only one of the following means:

(1) Online: *http://www.regulations.gov.*

(2) Mail: DMF (M–30), DOT, West Building Ground Floor, Room W12–140, 1200 New Jersey Avenue SE., Washington, DC 20590–0001.

(3) Hand delivery: Same as mail address above, between 9 a.m. and 5 p.m., Monday through Friday, except Federal holidays. The telephone number is 202–366–9329.

(4) Fax: 202–493–2251. To ensure your comments are received in a timely manner, mark the fax, to attention Desk Officer for the Coast Guard.

The DMF maintains the public docket for this Notice. Comments and material received from the public, as well as documents mentioned in this Notice as being available in the docket, will become part of the docket and will be available for inspection or copying at room W12–140 on the West Building Ground Floor, 1200 New Jersey Avenue SE., Washington, DC, between 9 a.m. and 5 p.m., Monday through Friday, except Federal holidays. You may also find the docket on the Internet at *http://www.regulations.gov.*

Copies of the ICR(s) are available through the docket on the Internet at *http://www.regulations.gov.* Additionally, copies are available from: COMMANDANT (CG–612), ATTN PAPERWORK REDUCTION ACT MANAGER, US COAST GUARD, 2703 MARTIN LUTHER KING JR AVE. SE., STOP 7710, WASHINGTON DC 20593–7710.

FOR FURTHER INFORMATION CONTACT: Contact Mr. Anthony Smith, Office of Information Management, telephone 202–475–3532, or fax 202–372–8405, for questions on these documents. Contact Ms. Cheryl Collins, Program Manager, Docket Operations, 202–366–9826, for questions on the docket.

SUPPLEMENTARY INFORMATION:

Public Participation and Request for Comments

This Notice relies on the authority of the Paperwork Reduction Act of 1995; 44 U.S.C. Chapter 35, as amended. An ICR is an application to OIRA seeking the approval, extension, or renewal of a Coast Guard collection of information (Collection). The ICR contains information describing the Collection's purpose, the Collection's likely burden on the affected public, an explanation of the necessity of the Collection, and other important information describing the Collection. There is one ICR for each Collection.

The Coast Guard invites comments on whether these ICRs should be granted based on the Collections being necessary for the proper performance of Departmental functions. In particular, the Coast Guard would appreciate comments addressing: (1) The practical utility of the Collections; (2) the accuracy of the estimated burden of the Collections; (3) ways to enhance the quality, utility, and clarity of information subject to the Collections; and (4) ways to minimize the burden of the Collections on respondents, including the use of automated collection techniques or other forms of information technology. In response to your comments, we may revise these ICRs or decide not to seek approval of revisions of the Collections. We will consider all comments and material received during the comment period.

We encourage you to respond to this request by submitting comments and related materials. Comments must contain the OMB Control Number of the ICR and the docket number of this request, [USCG–2014–0151], and must be received by June 6, 2014. We will post all comments received, without change, to *http://www.regulations.gov.* They will include any personal information you provide. We have an agreement with DOT to use their DMF. Please see the ''Privacy Act'' paragraph below.

Submitting Comments

If you submit a comment, please include the docket number [USCG–2014–0151], indicate the specific section of the document to which each comment applies, providing a reason for each comment. You may submit your comments and material online (*via http://www.regulations.gov*), by fax, mail, or hand delivery, but please use only one of these means. If you submit a comment online via *www.regulations.gov,* it will be considered received by the Coast Guard when you successfully transmit the comment. If you fax, hand deliver, or mail your comment, it will be considered as having been received by the Coast Guard when it is received at the DMF. We recommend you include your name, mailing address, an email address, or other contact information in the body of your document so that we can contact you if we have questions regarding your submission.

You may submit your comments and material by electronic means, mail, fax, or delivery to the DMF at the address under **ADDRESSES**; but please submit them by only one means. To submit your comment online, go to *http://www.regulations.gov,* and type ''USCG–2014–0151'' in the ''Search'' box. If you submit your comments by mail or hand delivery, submit them in an unbound format, no larger than 8½ by 11 inches, suitable for copying and electronic filing. If you submit comments by mail and would like to know that they reached the Facility, please enclose a stamped, self-addressed postcard or envelope. We will consider all comments and material received during the comment period and will address them accordingly.

Viewing comments and documents: To view comments, as well as documents mentioned in this Notice as being available in the docket, go to *http://www.regulations.gov,* click on the ''read comments'' box, which will then become highlighted in blue. In the ''Search'' box insert ''USCG–2014–0151'' and click ''Search.'' Click the ''Open Docket Folder'' in the ''Actions'' column. You may also visit the DMF in Room W12–140 on the ground floor of the DOT West Building, 1200 New Jersey Avenue SE., Washington, DC 20590, between 9 a.m. and 5 p.m., Monday through Friday, except Federal holidays.

Privacy Act

Anyone can search the electronic form of comments received in dockets by the name of the individual submitting the comment (or signing the comment, if submitted on behalf of an association, business, labor union, etc.). You may review a Privacy Act statement regarding Coast Guard public dockets in the January 17, 2008, issue of the **Federal Register** (73 FR 3316).

Information Collection Request

1. *Title:* Plan Approval and Records for U.S. and Foreign Tank Vessels Carrying Oil in Bulk.

OMB Control Number: 1625–0036.

Summary: This information collection aids the Coast Guard in determining if a vessel complies with certain safety and environmental protection standards. Plans, to include records, for construction or modification of U.S. or foreign vessels submitted and maintained on board are required for compliance with these standards.

Need: Title 46 U.S.C. 3703 provides the Coast Guard with the authority to regulate design, construction, alteration, repair, maintenance, operation, equipping, personnel qualification, and manning of vessels carrying oil in bulk. See e.g., 33 CFR part 157, Rules for the Protection of the Marine Environment Relating to Tank Vessels Carrying Oil in Bulk, and 46 CFR chapter I, subchapter D, Tank Vessels.

Forms: N/A.

Respondents: Owners and operators of vessels.

Frequency: On occasion.

Burden Estimate: The estimated burden has increased from 1,357 hours to 2,032 hours a year due to an increase in the estimated number of respondents.

Authority: The Paperwork Reduction Act of 1995; 44 U.S.C. Chapter 35, as amended.

Dated: March 24, 2014.

R.E. Day,

Rear Admiral, U.S. Coast Guard, Assistant Commandant for Command, Control, Communications, Computers and Information Technology.

[FR Doc. 2014–07685 Filed 4–4–14; 8:45 am]

BILLING CODE 9110–04–P

DEPARTMENT OF HOMELAND SECURITY

Coast Guard

[Docket No. USCG–2009–0168]

Interim Guidance for Nontank Vessel Response Plans

AGENCY: Coast Guard, DHS.

ACTION: Notice of cancellation.

SUMMARY: The Coast Guard announces the cancellation of Navigation and Vessel Inspection Circular (NVIC) No. 01–05, Change (CH)-1, ''Interim Guidance for the Development and Review of Response Plans for Nontank Vessels.'' NVIC 01–05, CH–1 is replaced by the ''Nontank Vessel Response Plans and Other Response Plan Requirements'' final rule promulgated on September 30, 2013.

DATES: NVIC No. 01–05, CH–1 is cancelled effective January 31, 2014.

FOR FURTHER INFORMATION CONTACT: If you have questions on the cancellation of NVIC 01–05, CH–1, call Lieutenant Commander John Peterson, Vessel Response Plan Program, Office of Commercial Vessel Compliance, at telephone number 202–372–1226. If you have questions on reviewing material in the docket, call Cheryl Collins, Program Manager, Docket Operations, at telephone number 202–366–9826.

SUPPLEMENTARY INFORMATION:

Background

On August 9, 2004, the President signed the Coast Guard and Maritime Transportation Act of 2004 (Pub. L. 108–293; the ''2004 Act''). Section 701 of the 2004 Act required any self-propelled nontank vessel of 400 gross tons or greater on U.S. navigable waters to prepare and submit an oil response plan by August 8, 2005.

On February 23, 2006, Change 1 to NVIC 01–05, ''Interim Guidance for the Development and Review of Response Plans for Nontank Vessels,'' was issued to augment previous guidance for nontank vessels preparing and submitting response plans to the U.S. Coast Guard. The NVIC was intended only to provide non-binding voluntary guidance to industry for preparing response plans.

Existing plans developed in accordance with NVIC 01–05, CH–1, may not comply with the newly issued nontank vessel response plan regulations, and may require the vessel owner or operator to revise a plan in accordance with the ''Nontank Vessel Response Plans and Other Response Plan Requirements'' final rule, RIN 1625–AB27, promulgated on September 30, 2013 (78 FR 60100). The final rule may be viewed online at *http://Regulations.gov* under docket number USCG–2008–1070. If you do not have internet access, you can obtain a copy of the final rule by contacting the VRP Program staff at 202–732–1005, or your local U.S. Coast Guard Sector Command. This notice is issued under the authority of 5 U.S.C. 552(a).

Dated: March 31, 2014.

J.C. Burton,

Captain, U.S. Coast Guard, Director, Inspections and Compliance.

[FR Doc. 2014–07600 Filed 4–4–14; 8:45 am]

BILLING CODE 9110–04–P

DEPARTMENT OF HOMELAND SECURITY

Coast Guard

[Docket No. USCG–2014–0013]

Lower Mississippi River Waterway Safety Advisory Committee; Meeting

AGENCY: Coast Guard, DHS.

ACTION: Notice of meeting.

SUMMARY: The Lower Mississippi River Waterway Safety Advisory Committee will meet on Wednesday, April 23, 2014 in New Orleans to discuss topics relating to navigational safety on the Lower Mississippi River. This meeting will be open to the public.

DATES: The Committee will meet on Wednesday, April 23, 2014, from 9:00 a.m. to 12:00 p.m. This meeting may close early if all business is finished. All submitted written materials, comments, and requests to make oral presentations at the meeting should reach Lieutenant Junior Grade Colin Marquis, Alternate Designated Federal Officer (ADFO) for LMRWSAC, no later than April 16, 2014. For contact information, please see the **FOR FURTHER INFORMATION CONTACT** section below. Any written material submitted by the public will be distributed to the Committee and become part of the public record.

ADDRESSES: The Committee will meet at the Sector New Orleans Building, 200 Hendee Street, New Orleans, Louisiana 70114, First Floor, Training Room ''A.'' Please be advised all attendees will be required to provide identification in the form of a government-issued picture identification card in order to gain admittance to the building.

For information on facilities or services for individuals with disabilities or to request special assistance, contact the individual listed in the **FOR FURTHER INFORMATION CONTACT** section, as soon as possible.

To facilitate public participation, we are inviting public comment on the issues to be considered by the committee as listed in the ''Meeting Agenda'' section below. Written comments must be submitted on or before April 16, 2014, must be identified by Docket No. USCG–2014–0013 and may be submitted by one of the following methods:

- Federal Rulemaking Portal: *http://www.regulations.gov* Follow the instructions for submitting comments (this is the preferred method to avoid delays in processing).
- Mail: Docket Management Facility (M–30), U.S. Department of Transportation, West Building Ground Floor, Room W12–140, 1200 New Jersey Avenue SE., Washington, D.C. 20590–0001. We encourage use of electronic submissions because security screening may delay the delivery of mail.
- Fax: 202–493–2251.
- Hand Delivery: Same as mail address above, between 9:00 a.m. and 5:00 p.m., Monday through Friday, except during Federal holidays. The telephone number is 202–366–9329.
- To avoid duplication, please use only one of these methods.

Instruction: All submissions received must include the words ''Department Of Homeland Security'' and the docket number of this notice. All comments submitted will be posted without alteration at *http://www.regulations.gov* including any personal information provided. You may review a Privacy Act notice regarding our public dockets in the January 17, 2008 issue of the **Federal Register** (73 FR 3316).

Docket: For access to the docket or to read documents or comments related to this notice, go to *http://www/regulations.gov*, insert USCG–2014–0013 in the Search box, press Enter, and then click on the item you wish to view.

FOR FURTHER INFORMATION CONTACT: Lieutenant Junior Grade Colin Marquis, ADFO for Lower Mississippi River

Waterway Safety Advisory Committee, telephone: 504–365–2284, fax: 504–365–2287 or email: *Colin.L.Marquis@uscg.mil*. If you have any questions on viewing or submitting material to the docket, call Cheryl Collins, Program Manager, Docket Operations, telephone: 202–366–9826.

SUPPLEMENTARY INFORMATION: Notice of this meeting is given under the *Federal Advisory Committee Act (FACA),* 5 U.S.C. Appendix 2 (Pub. L. 92–463). The LMRWSAC is an advisory committee authorized in Section 19 of the Coast Guard Authorization Act of 1991, (Pub. L. 102–241), as amended by section 621(d) of the Coast Guard Authorization Act of 2010, (Pub. L. 111–281) and chartered under the provisions of FACA. LMRWSAC provides advice and recommendations to the Department of Homeland Security (DHS) on matters relating to communications, surveillance, traffic management, anchorages, development and operation of the New Orleans Vessel Traffic Service, and other related topics dealing with navigation safety on the Lower Mississippi River as required by the U.S. Coast Guard (USCG).

Meeting Agenda

The agenda for the April 23, 2014 Committee meeting is as follows:

(1) Opening Remarks.

(2) Introduction of committee members and guests.

(3) Approval of the March, 2011 minutes.

(4) Agency Updates:

(a) Coast Guard

i. Discussion and update on status of Regulated Navigation Area (RNA); Gulf Intracoastal Waterway, Inner Harbor Navigation Canal, Harvey Canal, Algiers Canal, New Orleans, LA published in the **Federal Register**, Vol. 75, page 32279 (75 FR 32279), on June 8, 2010, Docket No. USCG–2009–0139.

ii. Discussion and update on District Eight Aids to Navigation initiatives and Navigation 2025, a program aimed toward modernizing visual aids to navigation systems by taking into account the technological advances made in electronic navigation.

iii. Discussion and update on status of sensors at 81 Mile Point.

iv. Discussion and update on status of Belmont and Bayou Goula Anchorages. These anchorages were proposed to increase available anchorage areas in the River to help accommodate increased vessel volume and improve navigational safety for vessels.

v. Discussion and update on status of Legislative Change Proposal to extend and align the LMRWSAC membership terms and charter.

(b) Army Corps of Engineers

i. Discussion and update on New Orleans area locks and Gulf Intracoastal Waterway (GIWW) operations as related to the Regulated Navigation Area (RNA); to include discussion of GIWW, Inner Harbor Navigation Canal (IHNC), Harvey Canal, Algiers Canal.

ii. Discussion and update on planned 2015 closure and dewatering of the IHNC Lock for installation of new replacement miter gates and gate operating machinery.

(c) National Oceanic and Atmospheric Association

i. Discussion and update on Mississippi River charts including revetments, anchorages, levees, and pipelines.

ii. Discussion and updates on Office of Coast Survey charting resources, movement to retire litho charts, and electronic chart resources.

iii. Discussion and update to the Lower Mississippi River Physical Oceanographic Real Time System (PORTS) and the post-construction clearance of the Huey Long Bridge.

iv. Review of navigation response resources and location and removal efforts for sunken vessel recovery in the Lower Mississippi River.

1. July 2013 sinking of tugboat C–PEC.

2. November 2013 sunken barge below Baton Rouge.

v. Hurricane Planning and Resources and Coordination.

1. Review of Tropical Storm Karen event.

(d) Southeast Louisiana Flood Protection

Authority—East and West

i. East

1. Update on operating procedures for Hurricane Storm Risk Reduction System gate closures in advance of storms.

2. Discussion of the procedures that will be used by Southeast Louisiana Flood Protection Authority—East to communicate and coordinate activities associated with navigational flood gate closures for both routine exercises and in response to tropical events.

ii. West

1. Discussion of the procedures that will be used by Southeast Louisiana Flood Protection Authority—West to communicate and coordinate activities associated with navigational flood gate closure for both routine exercises and in response to tropical events.

(5) New Business, to include discussion of:

(a) Proposed Liquefied Natural Gas (LNG) Terminals and waterway impacts.

(6) Old Business:

(a) Debrief of Huey P. Long Bridge expansion project.

(7) Public Comment period.

(8) Adjournment.

There will be a comment period for LMRWSAC and a comment period for the public after each deliberation and voting, but before each recommendation is formulated. The Committee will review the information presented on each issue, deliberate on any recommendations presented, and formulate recommendations for the Department's consideration. An opportunity for oral comments by the public will be provided during the meeting on April 23, 2014. Speakers are requested to limit their comments to three minutes. Please note that the public oral comment period may end before the end of the stated meeting time if the Committee has finished its business. Please contact Lieutenant Junior Grade Colin L. Marquis, listed in the **FOR FURTHER INFORMATION CONTACT** section, to register as a speaker.

Dated: March 18, 2014.

Kevin S. Cook,

Rear Admiral, U.S. Coast Guard, Commander, Eighth Coast Guard District.

[FR Doc. 2014–07602 Filed 4–4–14; 8:45 am]

BILLING CODE 9110–04–P

DEPARTMENT OF HOUSING AND URBAN DEVELOPMENT

[Docket No. FR–5752–C–33]

30-Day Notice of Proposed Information Collection: Owner's Certification With HUD Tenant Eligibility and Rent Procedures

AGENCY: Office of the Chief Information Officer, HUD.

ACTION: Correction, Notice.

SUMMARY: On March 31, 2014 at 79 FR 18047 HUD published a 30 day notice of proposed information collection. This notice replaces the notice published on March 31, 2014. HUD has submitted the proposed information collection requirement described below to the Office of Management and Budget (OMB) for review, in accordance with the Paperwork Reduction Act. The purpose of this notice is to allow for an additional 30 days of public comment.

DATES: *Comments Due Date: May 7, 2014.*

ADDRESSES: Interested persons are invited to submit comments regarding this proposal. Comments should refer to the proposal by name and/or OMB Control Number and should be sent to: HUD Desk Officer, Office of Management and Budget, New Executive Office Building, Washington, DC 20503; fax: 202–395–5806. Email: *OIRA_Submission@omb.eop.gov*.

FOR FURTHER INFORMATION CONTACT: Lanier M. Hylton, Housing Program Manager, Office of Program Systems Management, Office of Multifamily Housing Programs, Department of Housing and Urban Development, 451 7th Street SW., Washington, DC 20410, telephone (202) 402–2510 (this is not a toll free number) for copies of the proposed forms and other available information.

Persons with hearing or speech impairments may access this number through TTY by calling the toll-free Federal Relay Service at (800) 877–8339. This is not a toll-free number. Copies of available documents submitted to OMB may be obtained from Mr. Hylton.

SUPPLEMENTARY INFORMATION: This notice informs the public that HUD has submitted to OMB a request for approval of the information collection described in Section A. The **Federal Register** notice that solicited public comment on the information collection for a period of 30 days was published on July 30, 2013.

A. Overview of Information Collection

1. HUD-Form Number, Title of Information Collection, and OMB Approval Number

Form No.	Title of information collection under No. 2502–0204
HUD–27061–H	Race and Ethnic Data Reporting Form.
HUD–50059	Owner's Certification of Compliance with HUD's Tenant Eligibility and Rent Procedures.
HUD–50059–A	Owner's Certification of Compliance with HUD's Tenant Eligibility and Rent Procedures—Partial Certification.
HUD–90011	Enterprise Income Verification (EIV) System Multifamily Housing Coordinator Access Authorization Form.
HUD–90012	Enterprise Income Verification (EIV) System Multifamily Housing User Access Authorization Form.
HUD–90100	Recertification Notice.
HUD–90101	Certification of Long-Term Care Insurance.
HUD–90102	Verification of Disability (202/811 PAC and PRAC Programs).
HUD–90103	Verification of Disability (All Other Programs).
HUD–90104	Exception to Limitations on Admission of families' 2502–0204.
HUD–90105a	Model Lease for Subsidized Programs.
HUD–90105b	Model Lease for Section 202 Program.
HUD–90105c	202 PRAC Lease Supportive Housing for Elderly Program.
HUD–90105d	811 PRAC Lease Supportive Housing for Elderly Program.
HUD–90106	Move-In/Move Out Inspection Form.
HUD–91066	Certification of Domestic Violence, dating, Violence or Stalking.
HUD–91067	Lease Addendum—Violence, Dating Violence or Stalking.
HUD–9887/9887A	Document Package for Applicant's/Tenant's Consent to the Release of Information.

2. Description of the Need for the Information Collection and Proposed Use

HUD's Office of Multifamily Housing Programs needs to collect this information in order to establish an applicant's eligibility for admittance to subsidized housing, specify which eligible applicants may be given priority over others, and prohibit racial discrimination in conjunction with selection of tenants and unit assignments.

HUD must specify tenant eligibility requirements as well as how tenants' incomes, rents and assistance must be verified and computed so as to prevent HUD from making improper payments to owners on behalf of assisted tenants. HUD must also provide annual reports to Congress, Census Bureau and the public on the race/ethnicity and gender composition of HUD program beneficiaries. These information collections are essential to maintain a standard of fair practices in providing rental assistance to low-income families in HUD Multifamily properties.

a. These collections are authorized by the following statutes:

- Section 8 (42 U.S.C. 1437 *et seq.*).
- Rent Supplement (12 U.S.C. 1701s).
- Rental Assistance Payments (12 U.S.C. 1715z–1).
- Section 236 (12 U.S.C. 1172z–1).
- Section 221(d)(3) Below Market Interest Rate (12 U.S.C. 1715l).
- Title VI of the Civil Rights Act of 1964.
- Title VIII of the Civil Rights Act of 1968, as amended (Section 808).
- Executive Order 11063, Equal Opportunity in Housing.
- Social Security Numbers (42 U.S.C. 3543).
- Section 562 of the Housing and Community Development Act of 1987.
- Section 202 of the Housing Act of 1959, as amended.
- Section 811 of the National Affordable Housing Act of 1980.
- Computer Matching and Privacy Protection Act of 1988 (102 Statute 2507).
- Privacy Act of 1974 (5 U.S.C. 552a), Records Maintained on Individuals
- Quality Housing and Work Responsibility Act of 1998 (QHWRA)
- Section 658 of Title VI of Subtitle D of the Housing and Community Development Act of 1992.
- Executive Order 13520 of November 20, 2009, The Improper Payments Elimination and Recovery Act (IPERA)
- Executive Order 13515 of October 14, 2009, Increasing Participation of Asian Americans and Pacific Islanders in Federal Programs

b. These collections are covered by the following regulations:

- Section 8: 24 CFR Part 5, 24 CFR 880, 24 CFR 884, 24 CFR 886, 24 CFR 891 Subpart E.
- Section 236 and Rental Assistance Payments: 24 CFR 236.
- Section 221(d)(3): 24 CFR 221.
- Racial, Sex, Ethnic Data: 24 CFR 121.
- Nondiscrimination and Equal Opportunity in Housing: 24 CFR 107.
- Nondiscrimination in Federal Programs: 24 CFR 1.
- Social Security Numbers: 24 CFR Part 5.
- Procedures for Obtaining Wage and Claim Information Agencies: 24 CFR Part 760.
- Implementation of the Privacy Act of 1974: 24 CFR Part 16.
- Mandated use of HUD's Enterprise Income Verification (EIV) System: 24 CFR 5.233

3. Describe Respondents

The primary users of TRACS or its data outputs include:

Internal

- HUD Multifamily Housing 63 Field Offices
- HUD Headquarters Multifamily Housing Staff

- Office of the Chief Financial Officer (CFO)
- Office of Housing—Office of Finance and Accounting (OFA)
- Office of Chief Financial Officer—Office of Budget (OB)
- Office of Policy Development & Research (PD&R)
- Federal Housing Administration (FHA)/Comptroller's Office
- Departmental Enforcement Center (DEC)
- Real Estate Enforcement Center (REAC)
- Office of Multifamily Housing—Office of Affordable Housing
- HUD Office of the Inspector General (OIG)

External

- Performance Based Contract Administrators
- Contract Administrators
- Owners and Property Management Agents
- State Housing Finance Agencies
- Public Housing Authorities (PHA)
- The Government Accountability Office
- U.S. Census Bureau
- Office of Management and Budget (OMB)
- Congress/Public Requests (Under FOIA)

TRACS Industry Working Group

HUD established a working group in February 2012 to identify enhancements for TRACS Release 202D. The working group consists of 123 members from HUD Industry Partners (Contract Administrators, Occupancy Trainers, Owners, Property Management Agents, state housing finance agencies, and Occupancy Software Vendors) and HUD staff. The working group conducted eighteen work sessions to determine the requirements for TRACS Release 202D. During these sessions, forms relative to 2502–0204 were finalized for OMB forms approval (see Exhibit 1 for TRACS Industry Working Group Members.)

On January 14 and 15, 2014, HUD held the Quarterly TRACS Industry Meeting in Washington DC for approximately 130 Industry Partners (Contract Administrators, Owners/Agents, Service Bureaus, Trainers and Software Vendors). During the Industry Meeting, a special session was conducted where each form relative to 2502–0204 were presented to the attendees for open discussion. After the Industry Meeting, the Form Presentation was posted to the HUD TRACS Announcement Web page for review. On February 20, 2014, HUD held a Virtual Meeting with 115 Contract Administrators and HUD staff where the forms and TRACS 202D enhancements were presented followed by a question and answer period. No comments from the Quarterly TRACS Industry Meeting, Postings or Virtual Meeting resulted in changes to the forms being submitted to OMB for review and final approval.

HUD consulted with the following industry partners to discuss ways in which the burden to owners/management agents and tenants can be reduced and the impact these revised collections will have on the tenant certification and subsidy payment processes. After discussion, the conclusion was reached that these revised collections had been fully documented in the TRACS Monthly Activity Transaction (MAT) Guide and software vendors would have very little impact due to the fact that the requirements are already in place and the provision of HUD forms, notices, leases, etc., in lieu of using documents they or their software contractor have developed, ensures their compliance with the revised program requirements.

The new TRACS MAT Guide for TRACS 202(d) has been approved by industry partners and is located at: *http://portal.hud.gov/hudportal/HUD?src=/program_offices/housing/mfh/trx/trxsum*

TRACS Software Vendors

TRACS collections are 100% electronic, which required HUD to coordinate system development with 20 software firms through a defined system development lifecycle:

Company name	Point of contact	Business telephone number	E-Mail address
Bostonpost Technology	Jed Greaf	440–409–2942	*jed.graef@mrisoftware.com.*
BP Software	Ron Barlean	800–344–7611	*ronbarlean@gmail.com.*
CGI	Gregg Sargi	216–416–6454	*gregg.sargi@cgifederal.com.*
Emphasys Software	Paul Maltby	800–899–4227 EXT 1102	*pmaltby@emphasys-software.com.*
HAB	Jill Fularczyk	608–785–4950	*jill.fularczyk@habinc.com.*
Hopewell Software	Richard Hilton	954–353–9242	*richard@hopewellsoftwaresolutions.com.*
Housing Development Software	Charlene Vassil	954–217–9597 EXT 218	*charlene.vassil@hdsoftware.com.*
IPM Software	Dan Dulleba	802–985–9319	*ddulleba@ipm-software.net.*
Lindsey Software, Inc.	John Lindsey	501–372–5324	*john_lindsey@lindseysoftware.com.*
MultiSite Systems, LLC	Brent Lawrence	888–409–5393	*brentl@multisitesystems.com.*
PHA Web	Nathan Hoff	608–784–0354	*nathan@pha-web.com.*
PM Services, LLC	Maura Harris	314–496–8005	*maura.harris@att.net.*
Property Solutions	Janel Gamin	801–375–5522 EXT 5729	*jganim@propertysolutions.com.*
RealPage Inc.	Gaye Williamson	972–820–3265	*gaye.williamson@realpage.com.*
SACS Software	Grant Dark	256–329–1205	*grant@sacssoftware.com.*
ShofCorp LLC	Frank Shofner	800–824–1657 EXT 31	*frank@shofcorp.com.*
Simply Computer Software, Inc.	Craig Tinsley	800–626–2431 EXT 3	*craig@simplycomputer.net.*
Tenmast Software	Julie Rutherford	877–359–5492 EXT 1406	*julier@tenmast.com.*
Tracker Systems, Inc.	Stephen Vigeant	508–485–4160	*steve@trackersys.com.*
Yardi Systems, Inc.	Jenny Dyer	770–729–0007 EXT 6265	*jenny.dyer@yardi.com.*

TRACS 202(d) Development Lifecycle

Each of the 21 software vendors listed above agreed to systems development life cycle composed of the following defined and distinct work phases which are used by systems engineers and systems developers to plan for, design, build, test, and deliver information systems (includes all OMB approved data collections forms under 2502–0204):

- Preliminary analysis: The objective of phase 1 is to conduct a preliminary analysis, propose alternative solutions, describe costs and benefits and submit a preliminary plan with recommendations.
- Systems analysis, requirements definition: Defines project goals into defined functions and operation of the intended application and OMB approved forms.
- Systems design: Describes desired features and operations in detail, including screen layouts, business rules, process diagrams, pseudo-code and other documentation.
- Development: The real code is written here.
- Integration and testing: Brings all the pieces together into a special TRACS testing environment hosted within HUD's infrastructure, then TRACS checks each vendor's software for errors, bugs and interoperability.
- Acceptance, installation, deployment: The final stage of initial development, TRACS 202(d) Release software was put into production.

Note: The 21 software vendors listed above cannot implement TRACS 202(d) until OMB approves the HUD-Forms under collection number 2502–0204.

HUD Seeks Approval Not To Display the Expiration Date for OMB Approval of the Information Collection

All forms will be posted on HUD's Web site (*www.hudclips.org*) and will contain the OMB expiration date. However, HUD requests forms produced by automated systems not display or print the OMB expiration date.

HUD is seeking an extension not to display/print the expiration date on forms included in these information collections. To reduce this burden on Software Vendors, HUD is requesting an extension for Vendor software applications to reference/display the HUDCLIPS URL (*www.hudclips.org*). HUDCLIPS contains official HUD forms depicting the OMB expiration date and OMB control number. When OMB changes an expiration date on a form, HUD loads the form with the new expiration date onto HUDCIPS. Allowing Vendor's to use screens, facsimiles and reference HUDCLIPS eliminates the need for software vendors to change their existing applications to accommodate new OMB mandated expiration dates.

Whenever a HUD form changes or a new form is added, Industry Software Vendors must perform the software development life cycle phases (Analysis, Design, Development, Testing and Implementation, etc.) to ensure the change gets implemented at roughly 26,800 HUD Business Partner sites. With a number of HUD forms being relatively static, only the form expiration date changes over time. Software Vendors incur unnecessary cost when modifying their software applications to accommodate changing expiration dates. An expiration date change in vendor software adds no value.

4. Estimated Number of Respondents, Estimated Number of Responses, Frequency of Response, Average Hours per Response, and Total Estimated Burdens:

Form No.	Estimated number of respondents	Estimated number of responses	Frequency of response	Average hours per response	Total estimated burden
HUD–27061–H	1,581,290	1,407,348	1	.1667	234,605
HUD–50059	1,581,290	1,581,290	Annually	.9667	1,528,633
HUD–50059–A	475,299	475,299	Varies	.25	118,825
HUD–90011	45,462	41,825	Semi-Annually	.25	10,456
HUD–90012	45,462	41,825	Semi-Annually	.25	10,456
HUD–90100	1,581,290	1,581,290	Annually	.0667	105,472
HUD–90101	108	108	Annually	.1667	18
HUD–90102	8,260	8,260	1	.05	413
HUD–90103	17,614	17,614	1	.05	881
HUD–90104	300	300	Varies	.1667	50
HUD–91105a	564,024	564,024	1	.0833	47,002
HUD–90105b	14,279	14,279	1	.0833	1,189
HUD–90105c	92,250	92,250	1	.0833	7,684
HUD–90105d	43,402	43,402	1	.0833	3,615
HUD–90106	713,965	713,965	1	.0667	47,621
HUD–91066	358	358	1	.8333	298
HUD–91067	358	358	1	.1667	60
HUD–9887/9887A	713,965	713,965	1	.25	178,491
Total	7,478,976	7,297,760			2,295,769

B. Solicitation of Public Comment

This notice is soliciting comments from members of the public and affected parties concerning the collection of information described in Section A on the following:

(1) Whether the proposed collection of information is necessary for the proper performance of the functions of the agency, including whether the information will have practical utility;

(2) The accuracy of the agency's estimate of the burden of the proposed collection of information;

(3) Ways to enhance the quality, utility, and clarity of the information to be collected; and

(4) Ways to minimize the burden of the collection of information on those who are to respond; including through the use of appropriate automated collection techniques or other forms of information technology, e.g., permitting electronic submission of responses.

HUD encourages interested parties to submit comment in response to these questions.

Authority Section 3507 of the Paperwork Reduction Act of 1995, 44 U.S.C. Chapter 35

Dated: April 1, 2014.

Colette Pollard,

Department Reports Management Officer, Office of the Chief Information Officer.

[FR Doc. 2014–07733 Filed 4–4–14; 8:45 am]

BILLING CODE 4210–67–P

DEPARTMENT OF THE INTERIOR

Bureau of Safety and Environmental Enforcement

[Docket ID BSEE–2013–0013; OMB Control Number 1014–0011; 14XE1700DX EEEE500000 EX1SF0000.DAQ000]

Information Collection Activities: Platforms and Structures; Submitted for Office of Management and Budget Review; Comment Request

ACTION: 30-day Notice.

SUMMARY: To comply with the Paperwork Reduction Act of 1995 (PRA), the Bureau of Safety and Environmental Enforcement (BSEE) is notifying the public that we have submitted to the Office of Management and Budget (OMB) an information collection request (ICR) to renew approval of the paperwork requirements in the regulations under Subpart I, *Platforms and Structures.* This notice also provides the public a second opportunity to comment on the revised paperwork burden of these regulatory requirements.

DATES: You must submit comments by May 7, 2014.

ADDRESSES: Submit comments by either fax (202) 395–5806 or email (*OIRA_Submission@omb.eop.gov*) directly to the Office of Information and Regulatory Affairs, OMB, Attention: Desk Officer for the Department of the Interior (1014–0011). Please provide a copy of your comments to BSEE by any of the means below.

- *Electronically:* go to *http://www.regulations.gov.* In the Search box, enter BSEE–2013–0013 then click search. Follow the instructions to submit public comments and view all related materials. We will post all comments.
- *Email nicole.mason@bsee.govmailto:cheryl.blundon@mms.gov,* fax (703) 787–1546, or mail or hand-carry comments to the Department of the Interior; Bureau of Safety and Environmental Enforcement; Regulations and Standards Branch; ATTN: Nicole Mason; 381 Elden Street, HE3313; Herndon, Virginia 20170–4817. Please reference ICR 1014–0011 in your comment and include your name and return address.

FOR FURTHER INFORMATION CONTACT: Nicole Mason, Regulations and Standards Branch, (703) 787–1605, to request additional information about this ICR. To see a copy of the entire ICR submitted to OMB, go to *http://www.reginfo.gov* (select Information Collection Review, Currently Under Review).

SUPPLEMENTARY INFORMATION:

Title: 30 CFR 250, Subpart I, *Platforms and Structures.*

OMB Control Number: 1014–0011.

Abstract: The Outer Continental Shelf (OCS) Lands Act, as amended (43 U.S.C. 1331 *et seq.* and 43 U.S.C. 1801 *et seq.*), authorizes the Secretary of the Interior to prescribe rules and regulations necessary for the administration of the leasing provisions of that Act related to mineral resources on the OCS. Such rules and regulations will apply to all operations conducted under a lease, right-of-way, or a right-of-use and easement. Operations on the OCS must preserve, protect, and develop oil and natural gas resources in a manner that is consistent with the need to make such resources available to meet the Nation's energy needs as rapidly as possible; to balance orderly energy resource development with protection of human, marine, and coastal environments; to ensure the public a fair and equitable return on the resources of the OCS; and to preserve and maintain free enterprise competition. Section 43 U.S.C. 1356 requires the issuance of ''. . . regulations which require that any vessel, rig, platform, or other vehicle or structure . . . (2) which is used for activities pursuant to this subchapter, comply . . . with such minimum standards of design, construction, alteration, and repair as the Secretary . . . establishes. . . .'' Section 43 U.S.C. 1332(6) also states ''operations in the [O]uter Continental Shelf should be conducted in a safe manner . . . to prevent or minimize the likelihood of . . . physical obstruction to other users of the water or subsoil and seabed, or other occurrences which may cause damage to the environment or to property, or endanger life or health.''

In addition to the general authority of OCSLA, section 301(a) of the Federal Oil and Gas Royalty Management Act (FOGRMA), 30 U.S.C. 1751(a), grants authority to the Secretary to prescribe such rules and regulations as are reasonably necessary to carry out FOGRMA's provisions. While the majority of FOGRMA is directed to royalty collection and enforcement, some provisions apply to offshore operations. For example, section 109(c)(2) and (d)(1), 30 U.S.C. 1719(c)(2) and (d)(1), impose substantial civil penalties for failure to permit lawful inspections and for knowing or willful preparation or submission of false, inaccurate, or misleading reports, records, or other information. The Secretary has delegated some of the authority under FOGRMA to BSEE.

The Independent Offices Appropriations Act (31 U.S.C. 9701), the Omnibus Appropriations Bill (Pub. L. 104–133, 110 Stat. 1321, April 26, 1996), and OMB Circular A–25, authorize Federal agencies to recover the full cost of services that confer special benefits. Under the Department of the Interior's implementing policy, BSEE is required to charge fees for services that provide special benefits or privileges to an identifiable non-Federal recipient above and beyond those which accrue to the public at large. Various applications and reports for Platform Verification Program, fixed structure, Caisson/Well Protector, and modification repairs are subject to cost recovery, and BSEE regulations specify service fees for these requests.

These authorities and responsibilities are among those delegated to BSEE. The regulations at 30 CFR part 250, Subpart I, pertain to Platforms and Structures and are the subject of this collection. This request also covers the related Notices to Lessees and Operators (NTLs) that BSEE issues to clarify, supplement, or provide additional guidance on some aspects of our regulations.

Regulations implementing these responsibilities are among those delegated to BSEE. While most responses are mandatory, some are required to obtain or retain a benefit. No questions of a sensitive nature are asked. The BSEE protects information considered proprietary under the Freedom of Information Act (5 U.S.C. 552) and DOI's implementing regulations (43 CFR part 2), and under regulations at 30 CFR Part 250.197, *Data and information to be made available to the public or for limited inspection,* 30 CFR Part 252, *OCS Oil and Gas Information Program.*

The BSEE uses the information submitted under Subpart I to determine the structural integrity of all OCS platforms and floating production facilities and to ensure that such integrity will be maintained throughout the useful life of these structures. We use the information to ascertain, on a case-by-case basis, that the fixed and floating platforms and structures are structurally sound and safe for their intended use to ensure safety of

personnel and prevent pollution. More specifically, we use the information to:

- Review data concerning damage to a platform to assess the adequacy of proposed repairs.
- Review applications for platform construction (construction is divided into three phases–design, fabrication, and installation) to ensure the structural integrity of the platform.
- Review verification plans and third-party reports for unique platforms to ensure that all nonstandard situations are given proper consideration during the platform design, fabrication, and installation.
- Review platform design, fabrication, and installation records to ensure that the platform is constructed according to approved applications.
- Review inspection reports to ensure that platform integrity is maintained for the life of the platform.

Frequency: On occasion, as a result of situations encountered; and annually.

Description of Respondents: Potential respondents include Federal OCS oil, gas, or sulphur lessees and/or operators.

Estimated Reporting and Recordkeeping Hour Burden: The estimated annual hour burden for this information collection is a total of 261,313 hours. The following chart details the individual components and estimated hour burdens. In calculating the burdens, we assumed that respondents perform certain requirements in the normal course of their activities. We consider these to be usual and customary and took that into account in estimating the burden.

BURDEN BREAKDOWN

Citation 30 CFR 250 Subpart I and related NTLs	Reporting and/or Recordkeeping Requirement*	Hour Burden	Average No. of Annual Reponses	Annual Burden Hours
		Non-Hour Cost Burdens		
General Requirements for Platforms				
900(b), (c), (e); 901(b); 905; 906; 910(c), (d); 911(c), (g); 912; 913; 919; NTL(s) [PAP 904-908; PVP 909-918]	Submit application, along with reports/surveys and relevant data, to install new platform or floating production facility or significant changes to approved applications, including but not limited to: summary of safety factors utilized in design of the platform; use of alternative codes, rules, or standards; CVA changes; and Platform Verification Program (PVP) plan for design, fabrication, and installation of new, fixed, bottom-founded, pile-supported, or concrete-gravity platforms and new floating platforms. Consult as required with BSEE and/or USCG. Re/Submit application for major modification(s)/repairs to any platform and obtain approval; and related requirements.	817	100 applications	81,700
		$22,734 x 3 PVP = $68,202		
		$3,256 x 12 fixed structure = $39,072		
		$1,657 x 20 Caisson/Well Protector = $33,140		
		$3,884 x 65 modifications/repairs = $252,460		
900(b)(4)	Submit application for approval to convert an existing platform for a new purpose.	105	4 applications	420
900(b)(5)	Submit application for approval to convert an existing mobile offshore drilling unit (MODU) for a new purpose.	120	2 applications	240
900(c)	Notify BSEE within 24 hours of damage and emergency repairs and request approval of repairs. Submit written completion report within 1 week upon completion of repairs.	7	14 notices/ requests; reports	98
		17		238
900(e)	Submit platform installation date and the final as-built location data to the Regional Supervisor within 45 days after platform installation.	19	140 submittals	2,660
900(e)	Resubmit an application for approval to install a platform if it was not installed within 1 year after approval (or other date specified by BSEE).	58	6 applications	348
901(b)	Request approval for alternative codes, rules, or standards.	Burden covered under 30 CFR 250, Subpart A, 1014-0022.		0
903	Record original and relevant material test results of all primary structural materials; retain records during all stages of construction. Compile, retain, and provide location/make available to BSEE for the functional life of	204	111 lessees	22,644

Citation 30 CFR 250 Subpart I and related NTLs	Reporting and/or Recordkeeping Requirement*	Hour Burden	Average No. of Annual Reponses	Annual Burden Hours
		Non-Hour Cost Burdens		
	platform, the as-built drawings, design assumptions/analyses, summary of nondestructive examination records, inspection results, and records of repair not covered elsewhere.			
903(c); 905(k)	Submit certification statement [a certification statement is not considered information collection under 5 CFR 1320.3(h)(1); the burden is for the insertion of the location of the records on the statement and the submittal to BSEE].	This statement is submitted with the application.		0
Subtotal			**377 responses**	**108,348 hours**
			$392,874 Non-Hour Cost Burdens	
Platform Verification Program				
911(c-e); 912(a-c); 914;	Submit complete schedule of all phases of design, fabrication, and installation with required information; also submit Gantt Chart with required information and required nomination/documentation for CVA, or to be performed by CVA.	173	5 schedules	865
912(a)	Submit design verification plans with your DPP or DOCD.	Burden covered under 30 CFR 550, Subpart B, 1010-0151.		0
913(a)	Resubmit a changed design, fabrication, or installation verification plan for approval.	87	2 plans	174
916(c)	Submit interim and final CVA reports and recommendations on design phase.	230	10 reports	2,300
917(a), (c)	Submit interim and final CVA reports and recommendations on fabrication phase, including notices to BSEE and operator/lessee of fabrication procedure changes or design specification modifications.	183	10 reports	1,830
918(c)	Submit interim and final CVA reports and recommendations on installation phase.	133	10 reports	1,330
Subtotal			**37 responses**	**6,499 hours**
Inspection, Maintenance, and Assessment of Platforms				
919(a)	Develop in-service inspection plan and keep on file. Submit annual (November 1 of each year) report on inspection of platforms or floating production facilities, including summary of testing results.	171	117 lessees	20,007
919(b) NTL	After an environmental event, submit to Regional Supervisor initial report followed by updates and supporting information.	45 (initial)	150 reports	6,750
		30 (update)	90 reports	2,700

Citation 30 CFR 250 Subpart I and related NTLs	Reporting and/or Recordkeeping Requirement*	Hour Burden	Average No. of Annual Reponses	Annual Burden Hours
		Non-Hour Cost Burdens		
919(c) NTL	Submit results of inspections, description of any damage, assessment of structure to withstand conditions, and remediation plans.	159	200 results	31,800
920(a)	Demonstrate platform is able to withstand environmental loadings for appropriate exposure category.	130	400 occurrences	52,000
920(c)	Submit application and obtain approval from the Regional Supervisor for mitigation actions (includes operational procedures).	153	200 applications	30,600
920(e)	Submit a list of all platforms you operate, and appropriate supporting data, every 5 years or as directed by the Regional Supervisor.	94	112 operators / 5 years = 23 lists per year	2,162
920(f)	Obtain approval from the Regional Supervisor for any change in the platform.	64	2 approvals	128
Subtotal			**1,182 responses**	**146,147 hours**
General Departure				
900 thru 921	General departure and alternative compliance requests not specifically covered elsewhere in Subpart I regulations.	29	11 requests	319 hours
Subtotal			**11 responses**	**319 hours**
TOTAL BURDEN			**1,607 Responses**	**261,313 Hours**
			$392,874 Non-Hour Cost Burdens	

* In the future, BSEE will be allowing the option of electronic reporting for certain requirements.

BILLING CODE 4310–VH–C

Estimated Reporting and Recordkeeping Non-Hour Cost Burden: We have identified four non-hour cost burdens, which are service fees required to recover the Federal Government's processing costs of certain submissions, for various platform applications/installations. The platform fees are as follows: $22,734 for installation under the Platform Verification Program; $3,256 for installation of fixed structures under the Platform Approval Program; $1,657 for installation of Caisson/Well Protectors; and $3,884 for modifications and/or repairs (see § 250.125). We have not identified any other non-hour cost burdens associated with this collection of information, and we estimate a total reporting non-hour cost burden of $392,874.

Public Disclosure Statement: The PRA (44 U.S.C. 3501, *et seq.,*) provides that an agency may not conduct or sponsor a collection of information unless it displays a currently valid OMB control number. Until OMB approves a collection of information, you are not obligated to respond.

Comments: Section 3506(c)(2)(A) of the PRA (44 U.S.C. 3501, *et seq.,*) requires each agency ''. . . to provide notice . . . and otherwise consult with members of the public and affected agencies concerning each proposed collection of information . . .'' Agencies must specifically solicit comments to: (a) Evaluate whether the collection is necessary or useful; (b) evaluate the accuracy of the burden of the proposed collection of information; (c) enhance the quality, usefulness, and clarity of the information to be collected; and (d) minimize the burden on the respondents, including the use of technology.

To comply with the public consultation process, on January 16, 2014, we published a **Federal Register** notice (79 FR 2859) announcing that we would submit this ICR to OMB for approval. The notice provided the required 60-day comment period. In addition, § 250.199 provides the OMB Control Number for the information collection requirements imposed by the 30 CFR 250, Subpart I regulations. The regulation also informs the public that they may comment at any time on the collections of information and provides the address to which they should send comments. We received one comment in response to the **Federal Register** notice; however, it was not germane to the paperwork burden of this information collection.

Public Availability of Comments: Before including your address, phone number, email address, or other personal identifying information in your comment, you should be aware that your entire comment–including your personal identifying information–may be made publicly available at any time. While you can ask us in your comment

to withhold your personal identifying information from public review, we cannot guarantee that we will be able to do so.

Information Collection Clearance Officer: Cheryl Blundon, 703–787–1607.

Dated: March 25, 2014.

Robert W. Middleton,

Deputy Chief, Office of Offshore Regulatory Programs.

[FR Doc. 2014–07677 Filed 4–4–14; 8:45 am]

BILLING CODE 4310–VH–P

DEPARTMENT OF THE INTERIOR

Fish and Wildlife Service

[FWS–R8–ES–2014–N055; FXES11120000–145–FF08ECAR00]

Endangered and Threatened Wildlife and Plants; Incidental Take Permit Application; Proposed Low-Effect Habitat Conservation Plan and Associated Documents; San Bernardino County, CA

AGENCY: Fish and Wildlife Service, Interior.

ACTION: Notice of availability; request for comments.

SUMMARY: We, the U.S. Fish and Wildlife Service (Service), have received an application from City of Rialto (applicant), for a 3-year incidental take permit (permit); the application includes the applicant's proposed habitat conservation plan (HCP), as required by the Endangered Species Act of 1973, as amended (Act). If approved, the permit would authorize incidental take of the endangered Delhi Sands flower-loving fly in the course of routine activities associated with the construction activities associated with the widening of San Bernardino Avenue, Riverside Avenue, and Willow Avenue. We invite public comment on the permit application and proposed HCP, and on our preliminary determination that the HCP qualifies as ''low-effect'' for a categorical exclusion under the National Environmental Policy Act. To make this determination, we used our environmental action statement and low-effect screening form, which are also available for review.

DATES: To ensure consideration, please send your written comments by May 7, 2014.

ADDRESSES: *Obtaining Documents:* You may request a copy of the incidental take permit application, proposed HCP, and associated documents by email, telephone, fax, or U.S. mail (see below). These documents are also available for public inspection by appointment during normal business hours at the office below. Please send your requests or comments by any one of the following methods, and specify ''San Bernardino Avenue, Riverside Avenue, and Willow Avenue Street Improvements HCP'' in your request or comment.

Submitting Comments: You may submit comments or requests for more information by any of the following methods:

Email: ken_corey@fws.gov. Include ''San Bernardino Avenue, Riverside Avenue, and Willow Avenue Street Improvements HCP'' in the subject line of your message.

Telephone: Kennon A. Corey, Palm Springs Fish and Wildlife Office, 760–322–2070.

Fax: Kennon A. Corey, Palm Springs Fish and Wildlife Office, 760–322–4648, Attn.: San Bernardino Avenue, Riverside Avenue, and Willow Avenue Street Improvements HCP.

U.S. Mail: Kennon A. Corey, Palm Springs Fish and Wildlife Office, Attn.: San Bernardino Avenue, Riverside Avenue, and Willow Avenue Street Improvements HCP, U.S. Fish and Wildlife Service, 777 East Tahquitz Canyon Way, Suite 208, Palm Springs, CA 92262.

In-Person Viewing or Pickup of Documents, or Delivery of Comments: Call 760–322–2070 to make an appointment during regular business hours at the above address.

FOR FURTHER INFORMATION CONTACT: Kennon A. Corey, Assistant Field Supervisor, Palm Springs Fish and Wildlife Office; telephone 760–332–2070. If you use a telecommunications device for the deaf (TDD), please call the Federal Information Relay Service (FIRS) at 800–877–8339.

SUPPLEMENTARY INFORMATION:

Introduction

The applicant, City of Rialto, requests an incidental take permit under section 10(a)(1)(B) of the Act. If we approve the permit, the applicant anticipates taking Delhi Sands flower-loving fly (*Rhaphiomidas terminatus abdominalis*) as a result of minor disturbances to habitat the species uses for breeding, feeding, and sheltering. Take of Delhi Sands flower-loving fly would be incidental to the applicant's routine activities associated with the construction activities associated with the widening of San Bernardino Avenue, Riverside Avenue, and Willow Avenue, in the City of Rialto, San Bernardino County, California. We published a final rule to list Delhi Sands flower-loving fly as endangered on September 23, 1993 (58 FR 49881). The rule became effective September 22, 1993. A 5-year review of the species was published in March 2008.

Background

Section 9 of the Act (16 U.S.C. 1531 *et seq.*) and our implementing Federal regulations in the Code of Federal Regulations (CFR) at 50 CFR 17 prohibit the ''take'' of wildlife species listed as endangered or threatened. Take of listed wildlife is defined under the Act as ''to harass, harm, pursue, hunt, shoot, wound, kill, trap, capture, or collect listed species, or to attempt to engage in any such conduct'' (16 U.S.C. 1538). ''Harm'' includes significant habitat modification or degradation that actually kills or injures listed wildlife by significantly impairing essential behavioral patterns such as breeding, feeding, or sheltering (50 CFR 17.3). Under limited circumstances, we may issue permits to authorize incidental take of listed wildlife species, which the Act defines as take that is incidental to, and not the purpose of, the carrying out of otherwise lawful activities.

Regulations governing incidental take permits for threatened and endangered species are at 50 CFR 17.32 and 17.22, respectively. In addition to meeting other criteria, activities covered by an incidental take permit must not jeopardize the continued existence in the wild of federally listed wildlife or plants.

Applicant's Proposal

The applicant requests a 3-year permit under section 10(a)(1)(B) of the Act. If we approve the permit, the applicant anticipates taking Delhi Sands flower-loving fly (*Rhaphiomidas terminatus abdominalis*) as a result of street improvements which will permanently and temporarily impact 0.74 acre (ac) (0.30 hectare (ha)) of habitat the species uses for breeding, feeding, and sheltering. The take would be incidental to the applicant's routine construction activities associated with the widening of San Bernardino Avenue, Riverside Avenue, and Willow Avenue, in the City of Rialto, San Bernardino County, California.

A portion of the street widening project is on Delhi Sands soils. This soil type, which consists of fine wind-blown sand deposits, along with sparse native shrubs and annual plants defines the Delhi Sands flower-loving fly habitat. Less than 5 percent of the species' historic range is left, found in a few disjunct locations in southwestern San Bernardino and northwestern Riverside Counties. Development and exclusion by invasive plant species continue to be

threats to this species. Conservation banks, like the Colton Dunes Conservation Bank, are this species' best chance at recovery.

To minimize take of Delhi Sands flower-loving fly at the City of Rialto's street widening project, the applicant proposes to mitigate for the permanent and temporary take of 0.74 ac (0.30 ha) of habitat by preserving 1ac (0.40 ha) of habitat occupied by Delhi Sands flower-loving fly. The applicant's proposed HCP also contains the following proposed measures to minimize the impact to the habitat adjacent to the street improvements:

- Fence work areas to keep workers off of habitat.
- Post signs to educate the public about the Delhi Sands flower-loving fly along the work area.
- Require environmental awareness training for all workers.
- Confine construction activities to existing roads or other paved areas.
- Require that all construction activities be completed during the time period October through June only (i.e., outside of the Delhi Sands flower-loving fly flight season).

Proposed Habitat Conservation Plan Alternatives

In the proposed HCP, the applicant considers alternatives to the taking of Delhi Sands flower-loving fly under the proposed action. Our proposed action is to issue an incidental take permit to the applicant, who would implement the HCP. If we approve the permit, take of Delhi Sands flower-loving fly would be authorized for the applicant's routine construction activities associated with the widening of San Bernardino Avenue, Riverside Avenue, and Willow Avenue, in the City of Rialto. The applicant's proposed HCP does identify a no-build alternative that would not result in incidental take of Delhi Sands flower-loving fly, but it is infeasible for the City of Rialto to accept this alternative as it would result in roadway congestion and insufficient storm drain capacity due to future planned development.

Our Preliminary Determination

We invite comments on our preliminary determination that our proposed action, based on the applicant's proposed activities, including the proposed minimization and mitigation measures, would have a minor or negligible effect on Delhi Sands flower-loving fly, and that the HCP qualifies as ''low effect'' as defined by our *Habitat Conservation Planning Handbook* (November 1996).

We base our determination that a HCP qualifies as a low-effect plan on the following three criteria:

(1) Implementation of the HCP would result in minor or negligible effects on federally listed, proposed, and candidate species and their habitats;

(2) Implementation of the HCP would result in minor or negligible effects on other environmental values or resources; and

(3) Impacts of the HCP, considered together with the impacts of other past, present, and reasonably foreseeable similarly situated projects, would not result, over time, in cumulative effects to environmental values or resources that would be considered significant.

As more fully explained in our environmental action statement and associated low-effect screening form, the applicant's proposed HCP qualifies as a low-effect HCP for the following reasons:

- The project is small in size and does not jeopardize the continued existence of the Delhi Sands flower-loving fly.
- The applicant will mitigate impacts to the Delhi Sands flower-loving fly by purchasing 1 ac of occupied Delhi Sands flower-loving fly habitat within the Colton Dunes Conservation Bank prior to ground disturbance.
- This project provides a net gain in preserved occupied habitat.

Therefore, our proposed issuance of the requested incidental take permit qualifies as a categorical exclusion under the National Environmental Policy Act (NEPA), as provided by the Department of the Interior Manual (516 DM 2 Appendix 1, 516 DM 6 Appendix 1, and 516 DM 8.5(C)(2)). Based on our review of public comments we receive in response to this notice, we may revise this preliminary determination.

Next Steps

We will evaluate the proposed HCP and comments we receive to determine whether the permit application meets the requirements and issuance criteria under section 10(a) of the Act (16 U.S.C. 1531 *et seq.*). We will also evaluate whether issuance of a section 10(a)(1)(B) incidental take permit would comply with section 7 of the Act by conducting an intra-Service consultation. We will use the results of this consultation, in combination with the above findings, in our final analysis to determine whether or not to issue a permit. If the requirements and issuance criteria under section 10(a) are met, we will issue the permit to the applicant for incidental take of Delhi Sands flower-loving fly.

Public Comments

If you wish to comment on the permit application, proposed HCP, and associated documents, you may submit comments by any of the methods noted in the **ADDRESSES** section.

Public Availability of Comments

Before including your address, phone number, email address, or other personal identifying information in your comment, you should be aware that your entire comment—including your personal identifying information—may be made publicly available at any time. While you may ask us in your comment to withhold your personal identifying information from public review, we cannot guarantee that we will be able to do so.

Authority

We provide this notice under section 10 of the Act (16 U.S.C. 1531 *et seq.*) and NEPA regulations (40 CFR 1506.6).

Scott A. Sobiech,

Acting Field Supervisor, Carlsbad Fish and Wildlife Office, Carlsbad, California.

[FR Doc. 2014–07665 Filed 4–4–14; 8:45 am]

BILLING CODE 4510–55–P

DEPARTMENT OF THE INTERIOR

Fish and Wildlife Service

FWS–R6–ES–2014–N059; FF06E24000–145–FXES11150600000]

Endangered and Threatened Wildlife and Plants; Incidental Take Permit Application; Proposed Low-Effect Habitat Conservation Plan for the Preble's Meadow Jumping Mouse at the Kettle Creek Ranch in El Paso County, Colorado

AGENCY: Fish and Wildlife Service, Interior.

ACTION: Notice of availability; request for comments.

SUMMARY: We, the U.S. Fish and Wildlife Service (Service), received a permit application from Vintage Companies and are announcing the availability of a draft low-effect Habitat Conservation Plan (HCP) for review and comment by the public and Federal, Tribal, State, and local governments. The proposed permit would authorize the incidental take of the federally threatened Preble's meadow jumping mouse from Vintage Companies' proposed Kettle Creek Ranch residential development in El Paso County, Colorado. We request comments on the permit application, including the draft low-effect HCP.

DATES: Written comments must be submitted by May 7, 2014.

ADDRESSES: Send written comments by U.S. mail to Susan Linner, Field Supervisor, Colorado Ecological Services Field Office, U.S. Fish and Wildlife Service, P.O. Box 25486 (DFC MS 65412), Denver, Colorado 80225–0486, or via email to *coloradoES@fws.gov.* You also may send comments by facsimile to 303–236–4005. For how to access the documents, see Availability of Documents in the **SUPPLEMENTARY INFORMATION** section.

FOR FURTHER INFORMATION CONTACT: Craig Hansen, U.S. Fish and Wildlife Service, Colorado Ecological Services Field Office, telephone: 303–236–4749 (see **ADDRESSES**). If you use a telecommunications device for the deaf (TDD), please call the Federal Information Relay Service (FIRS) at 800–877–8339.

SUPPLEMENTARY INFORMATION: This notice advises the public that Vintage Companies has applied to the U.S. Fish and Wildlife Service (Service) for an incidental take permit pursuant to section 10(a)(1)(B) of the Endangered Species Act (Act) of 1973, as amended (16 U.S.C. 1538). The proposed permit would authorize the incidental take of the federally threatened Preble's meadow jumping mouse, or PMJM (*Zapus hudsonius preblei*), from Vintage Companies' proposed Kettle Creek Ranch residential development in El Paso County, Colorado. The proposed incidental take permit would expire 20 years after the issuance date.

Availability of Documents

The draft low-effect HCP is available for download from our Web site at *http://www.fws.gov/coloradoES/KettleCreekHCP.html.* You also may review a copy of this document during regular business hours at the Colorado Ecological Services Field Office (see **ADDRESSES**). If you do not have access to the Web site or cannot visit our office, you may request copies by telephone at 303–236–4773, by letter to the Colorado Field Office, or by email to *coloradoES@fws.gov.*

Background

Section 9 of the Act and its implementing regulations prohibit take of species listed as endangered or threatened. The definition of take under the Act includes to ''harass, harm, pursue, hunt, shoot, wound, kill, trap, capture, or collect listed species or to attempt to engage in such conduct'' (16 U.S.C. 1532(19)). Section 10 of the Act (16 U.S.C. 1539) establishes a program whereby persons seeking to pursue activities that are otherwise legal, but could result in take of federally protected species, may receive an incidental take permit (ITP). Applicants for ITPs must submit a HCP that meets the section 10 permit issuance criteria. ''Low-effect'' incidental take permits are those permits that, despite their authorization of some small level of incidental take, individually and cumulatively have a minor or negligible effect on the species covered in the HCP.

Vintage Companies' permit application includes a draft low-effect Habitat Conservation Plan (HCP) for the PMJM at the Kettle Creek Ranch residential development. The low-effect HCP describes the proposed project and the measures Vintage Companies would undertake to minimize and mitigate impacts to the PMJM.

We intend to process this application under a categorical exclusion from the National Environmental Policy Act (NEPA) of 1969 in accordance with our Habitat Conservation Planning Handbook (November 1996). We request comments on Vintage Companies' permit application and the draft low-effect HCP.

Proposed Action

Vintage Companies proposes to develop approximately 38 acres of previously undeveloped land at the Kettle Creek Ranch into a residential development with single-family and multi-dwelling homes. The Kettle Creek Ranch is located at the northwest corner of Old Ranch Road and Chapel Ridge Drive to the north of the City of Colorado Springs, in El Paso County, Colorado (Section 21, Township 12 South, Range 66 West; Latitude: 38.985707°; Longitude: −104.775375°). Vintage Companies will construct the residential lots next to Kettle Creek and its tributaries, where trapping surveys verified that the PMJM occurs.

Construction, loss of habitats, and increased human presence within the Kettle Creek Ranch project area could take PMJM. Developing the Kettle Creek Ranch into residential lots would permanently remove 0.262 acre (0.106 hectare) of PMJM habitats along the southern tributary of Kettle Creek. Other development activities would temporarily affect 0.118 acre (0.048 hectare) of PMJM habitat along Kettle Creek. Additionally, by increasing erosion, sedimentation, or introducing noxious weeds, the development may affect the composition, structure, or density of riparian vegetation along Kettle Creek and its tributaries, reducing habitat quality and the PMJM's ability to feed, breed, or shelter. Following construction, pets, such as house cats, could kill PMJM and increased pedestrian traffic along Kettle Creek and its tributaries could disturb PMJM.

Vintage Companies' draft low-effect HCP outlines conservation measures, best management practices, habitat enhancement goals, and monitoring requirements in order to avoid, minimize, and mitigate potential impacts to the PMJM from the Kettle Creek Ranch development. To mitigate the 0.262 acres (0.106 hectares) of permanent habitat loss, Vintage Companies will enhance 1.601 acres (0.648 hectare) of PMJM habitat along Kettle Creek and its tributaries. Additionally, Vintage Companies will improve PMJM habitats and stream flow by planting native grasses, shrubs, and trees, managing noxious weeds, and removing faulty culverts. Vintage Companies will adaptively manage and monitor the success of the mitigation efforts and will provide annual reports to the Service until the success criteria are achieved. By improving the quality and connectivity of habitats at Kettle Creek and its tributaries, successful implementation of the low-effect HCP may benefit the PMJM.

Our Preliminary Determination

The Service has made a preliminary determination that approval of the proposed HCP qualifies as a categorical exclusion under NEPA, as provided by the Department of the Interior Manual (516 DM 2 Appendix 1 and 516 DM 6 Appendix 1) and as a ''low-effect'' habitat conservation plan as defined by our *Habitat Conservation Planning Handbook* (November 1996).

We base our determination on the following information:

(1) The size and scope of the incidental take of PMJM from the proposed project is relatively small and limited to a maximum of 0.262 acres (0.106 hectares; 11,413 square feet) of permanent habitat loss and 0.118 acre (0.048 hectare; 5,140 square feet) of temporary habitat loss, or take of one PMJM over 20 years.

(2) The total amount of take resulting from impacts to 0.380 acre (0.154 hectare; 16,553 square feet) equates to less than 0.01 percent of the PMJM's overall occupied range in Colorado.

We base our determination that a HCP qualifies a low-effect plan on the following three criteria:

(1) Implementation of the HCP would result in minor or negligible effects on federally listed, proposed, and candidate species and their habitats;

(2) Implementation of the HCP would result in minor or negligible effects on

other environmental values or resources; and

(3) Impacts of the HCP, considered together with the impacts of other past, present, and reasonably foreseeable similarly situated projects, would not result, over time, in cumulative effects to environmental values or resources that would be considered significant.

We conclude that implementation of the plan would result in overall minor or negligible effects on the PMJM and its habitats. We may revise this preliminary determination based on public comments submitted in response to this notice. We will evaluate the permit application, the draft low-effect HCP, and comments submitted herein to determine whether the application meets the requirements of section 10(a) of the Act. If the application satisfies the requirements, we will issue a permit for the incidental take of the PMJM from the development of the Kettle Creek Ranch. We will make the final permit decision after considering the public comments.

Based upon this preliminary determination, we do not intend to prepare further NEPA documentation. We will consider public comments in making the final determination on whether to prepare such additional documentation.

Public Availability of Comments

Before including your address, phone number, email address, or other personal identifying information with your comment, you should be aware that your entire comment—including your personal identifying information—may be made publicly available at any time. While you can ask us in your comment to withhold your personal identifying information from public review, we cannot guarantee that we will be able to do so.

Authority

We provide this notice under section 10 of the Act (16 U.S.C. 1531 et seq.) and NEPA regulations (40 CFR 1506.6).

Dated: April 1, 2014.

Susan Linner,

Field Supervisor, Colorado Ecological Services Field Office.

[FR Doc. 2014–07670 Filed 4–4–14; 8:45 am]

BILLING CODE 4310–55–P

DEPARTMENT OF THE INTERIOR

National Park Service

[NPS–WASO–14710; PXXVPAD0517.00.1]

Change of Jurisdiction—National Park Service Units within the State of South Carolina

AGENCY: National Park Service, Interior.

ACTION: Notice of Concurrent Jurisdiction.

SUMMARY: On behalf of the United States, the National Park Service accepted exclusive jurisdiction from the State of South Carolina, and retroceded and relinquished to the State of South Carolina, the measure of legislative jurisdiction necessary to establish concurrent jurisdiction between the United States and the State of South Carolina on certain lands administered by the National Park Service within the State of South Carolina.

DATES: *Effective Date:* Concurrent legislative jurisdiction on these lands and waters became effective on or about November 27, 2013.

FOR FURTHER INFORMATION CONTACT: Jonathan Pierce, National Park Service, Southeast Region, 100 Alabama Street SW., 1924 Building, Atlanta, GA 30303. Phone: 404–507–5726.

SUPPLEMENTARY INFORMATION: In a letter to the Honorable Nikki Haley, Governor of South Carolina, dated July 30, 2013, in accordance with Sections 3–1–10 and 3–1–120 of the South Carolina Code and 40 U.S.C. 3112, Jonathan B. Jarvis, Director of the National Park Service, (NPS), formally accepted exclusive jurisdiction over certain lands administered by the NPS, acquired after September 29, 1983, within Congaree National Park, Cowpens National Battlefield, Fort Sumter National Monument, Ninety Six National Historic Site, and for all lands acquired at Charles Pinckney National Historic Site. The acceptance of exclusive jurisdiction was conditioned upon acceptance by the State of South Carolina of the simultaneous retrocession and relinquishment to the State of South Carolina of such measure of legislative jurisdiction, civil and criminal, as necessary to establish concurrent jurisdiction between the United States and the State of South Carolina. The State of South Carolina accepted the cession of jurisdiction, thereby establishing concurrent jurisdiction between the United States and the State of South Carolina, through execution of a notice of acceptance. The notice of acceptance was authorized by resolution of the South Carolina Budget and Control Board, and subsequently signed by South Carolina Governor Nikki Haley on November 27, 2013. The notice was transmitted to and received by NPS Director Jarvis on December 16, 2013. Concurrent jurisdiction between the United States and the State of South Carolina on those lands as previously described was effective upon the sending of the notice of acceptance by the State of South Carolina.

Dated: March 10, 2014.

Jonathan B. Jarvis,

Director, National Park Service.

[FR Doc. 2014–07613 Filed 4–4–14; 8:45 am]

BILLING CODE 4312–EJ–P

DEPARTMENT OF THE INTERIOR

National Park Service

[NPS–WASO–NRNHL–15227; PPWOCRADI0, PCU00RP14.R50000]

Landmarks Committee of the National Park System Advisory Board Meeting

AGENCY: National Park Service, Interior.

ACTION: Notice of meeting.

SUMMARY: Notice is hereby given in furtherance of the Federal Advisory Committee Act, (5 U.S.C. Appendix 1–16), that a meeting of the Landmarks Committee of the National Park System Advisory Board will be held beginning at 10:00 a.m. on May 28, 2014, at the Charles Sumner School Museum and Archives. The meeting will continue beginning at 9:30 a.m. on May 29, 2014, at the National Park Service Washington Office. Please note the two different meeting locations.

DATES: The meeting will be held on May 28, 2014, from 10:00 a.m. to 4:30 p.m.; and May 29, 2014, from 9:30 a.m. to 12:00 p.m., (Eastern).

Location: The Charles Sumner School Museum and Archives, 3rd Floor, The Richard L. Hurlbut Memorial Hall, 1201 17th Street NW., Washington, DC 20036; and the National Park Service Washington Office, 2nd Floor, 1201 Eye Street NW., Washington, DC 20005.

Agenda: The National Park System Advisory Board and its Landmarks Committee may consider the following nominations:

California
- CALIFORNIA POWDER WORKS BRIDGE, Santa Cruz County, CA

Florida
- MARJORY STONEMAN DOUGLAS HOUSE, Miami, FL

Indiana
- SAMARA (JOHN E. AND CATHERINE E. CHRISTIAN HOUSE), West Lafayette, IN

Massachusetts
BROOKLINE RESERVOIR OF THE COCHITUATE AQUEDUCT, Brookline, MA
Michigan
MCGREGOR MEMORIAL CONFERENCE CENTER, Detroit, MI
Montana
LAKE HOTEL, Yellowstone National Park, Teton County, MT
Ohio
ZOAR HISTORIC DISTRICT, Zoar, OH

Proposed Amendments to Existing Designations:

Arkansas
FORT SMITH, Fort Smith, AR (updated documentation and boundary change)
Kansas
NICODEMUS HISTORIC DISTRICT, Nicodemus, Graham County, KS (updated documentation and boundary change)
Montana and North Dakota
FORT UNION, Williams County, ND, and Roosevelt County, MT (updated documentation and boundary change)
Pennsylvania
CLIVEDEN, Philadelphia, PA (updated documentation)
Utah
MOUNTAIN MEADOWS MASSACRE SITE, Washington County, UT (updated documentation and boundary change)

Proposed Withdrawal of Designations:

California
WAPAMA (Steam Schooner), Richmond, CA

FOR FURTHER INFORMATION CONTACT: Patricia Henry, Historian, National Historic Landmarks Program, National Park Service, 1849 C Street NW., Washington, DC 20240; telephone (202) 354–2216 or email: *Patty_Henry@nps.gov.*

SUPPLEMENTARY INFORMATION: The purpose of the meeting of the Landmarks Committee of the National Park System Advisory Board is to evaluate nominations of historic properties in order to advise the National Park System Advisory Board of the qualifications of each property being proposed for National Historic Landmark designation, and to make recommendations regarding the possible designation of those properties as National Historic Landmarks to the National Park System Advisory Board at a subsequent meeting at a place and time to be determined. The Committee also makes recommendations to the National Park System Advisory Board regarding amendments to existing designations and proposals for withdrawal of designation. The members of the Landmarks Committee are:

Dr. Stephen Pitti, Chair
Dr. James M. Allan
Dr. Cary Carson
Mr. Luis Hoyos, AIA
Dr. Barbara J. Mills
Dr. William J. Murtagh
Dr. William D. Seale
Dr. Michael E. Stevens

The meeting will be open to the public. Pursuant to 36 CFR part 65, any member of the public may file, for consideration by the Landmarks Committee of the National Park System Advisory Board, written comments concerning the National Historic Landmarks nominations, amendments to existing designations, or proposals for withdrawal of designation.

Comments should be submitted to J. Paul Loether, Chief, National Register of Historic Places and National Historic Landmarks Program, National Park Service, 1849 C Street NW., Washington, DC 20240, email: *Paul_Loether@nps.gov.*

Before including your address, telephone number, email address, or other personal identifying information in your comment, you should be aware that your entire comment—including your personal identifying information—may be made publicly available at any time. While you may ask us in your comment to withhold your personal identifying information from public review, we cannot guarantee that we will be able to do so.

Dated: April 1, 2014.

Alma Ripps,

Chief, Office of Policy.

[FR Doc. 2014–07661 Filed 4–4–14; 8:45 am]

BILLING CODE 4312–51–P

DEPARTMENT OF THE INTERIOR

National Park Service

[NPS–NERO–CAJO–15216; PPNECAJO00 PPMPSPD1Z.YM0000]

Notice of Meeting for Captain John Smith Chesapeake National Historic Trail Advisory Council

AGENCY: National Park Service, Interior.

ACTION: Notice of Meeting.

SUMMARY: As required by the Federal Advisory Committee Act, (5 U.S.C. Appendix 1–16), the National Park Service (NPS) is hereby giving notice that the Advisory Council for the Captain John Smith Chesapeake National Historic Trail will hold a meeting, June 3, 2014. Designated through amendments to the National Trails System Act (16 U.S.C. 1241 to 1251, as amended), the Captain John Smith Chesapeake National Historic Trail consists of ''a series of water routes extending approximately 3,000 miles along the Chesapeake Bay and the tributaries of the Chesapeake Bay in the States of Virginia, Maryland, Delaware, and in the District of Columbia,'' tracing the 1607–1609 voyages of Captain John Smith to chart the land and waterways of the Chesapeake Bay.

This meeting is open to the public. Preregistration is required for both public attendance and comment. Any individual who wishes to attend the meeting and/or participate in the public comment session should register via email at *Christine_Lucero@nps.gov* or telephone (757) 258–8914. For those wishing to make comments, please provide a written summary of your comments prior to the meeting. The Designated Federal Official for the Captain John Smith Chesapeake National Historic Trail Advisory Council is Jonathan Doherty, Assistant Superintendent, telephone (410) 260–2477.

DATES: The Captain John Smith Chesapeake National Historic Trail Advisory Council will meet from 12:00 p.m. to 3:00 p.m. on Tuesday, June 3, 2014, (EASTERN).

ADDRESSES: The meeting will be held in Classroom A at Jamestown Settlement, 2110 Jamestown Road, Williamsburg, VA 23185. For more information, please contact Jonathan Doherty, Assistant Superintendent, Captain John Smith National Historic Trail, NPS Chesapeake Bay Office, 410 Severn Avenue, Suite 314, Annapolis, MD 21403, telephone (410) 260–2477.

FOR FURTHER INFORMATION CONTACT: Christine Lucero, Partnership Coordinator, telephone (757) 258–8914 or email *Christine_Lucero@nps.gov.*

SUPPLEMENTARY INFORMATION: Under section 10(a)(2) of the Federal Advisory Committee Act (5 U.S.C. Appendix 1–16), this notice announces a meeting of the Captain John Smith Chesapeake National Historic Trail Advisory Council for the purpose of discussing the success of projects from the James River Segment Plan, the ongoing progress of segment planning along the Potomac River, and the trail implementation projects update.

Comments will be taken for 30 minutes at the end of the meeting (from 2:30 p.m. to 3:00 p.m.). Before including your address, telephone number, email address, or other personal indentifying information in your comment, you

should be aware that your entire comment—including your personal identifying information—may be made publicly available at any time. While you may ask us in your comment to withhold your personal identifying information from public review, we cannot guarantee that we will be able to do so. All comments will be made part of the public record and will be electronically distributed to all Council members.

Dated: March 28, 2014.

Alma Ripps,

Chief, Office of Policy.

[FR Doc. 2014–07662 Filed 4–4–14; 8:45 am]

BILLING CODE 4310–WV–P

DEPARTMENT OF THE INTERIOR

National Park Service

[NPS–WASO–NRNHL–15335; PPWOCRADI0, PCU00RP14.R50000]

National Register of Historic Places; Notification of Pending Nominations and Related Actions

Nominations for the following properties being considered for listing or related actions in the National Register were received by the National Park Service before March 15, 2014. Pursuant to section 60.13 of 36 CFR Part 60, written comments are being accepted concerning the significance of the nominated properties under the National Register criteria for evaluation. Comments may be forwarded by United States Postal Service, to the National Register of Historic Places, National Park Service, 1849 C St. NW., MS 2280, Washington, DC 20240; by all other carriers, National Register of Historic Places, National Park Service,1201 Eye St. NW., 8th floor, Washington, DC 20005; or by fax, 202–371–6447. Written or faxed comments should be submitted by April 22, 2014. Before including your address, phone number, email address, or other personal identifying information in your comment, you should be aware that your entire comment—including your personal identifying information—may be made publicly available at any time. While you can ask us in your comment to withhold your personal identifying information from public review, we cannot guarantee that we will be able to do so.

Dated: March 20, 2014.

J. Paul Loether,

Chief, National Register of Historic Places/National Historic Landmarks Program.

COLORADO

Adams County

Engelbrecht Farm, 2024 Strasburg Rd., Strasburg, 14000170

CONNECTICUT

Fairfield County

River Road—Mead Avenue Historic District, Roughly along Mead Ave. & River Rd., Greenwich, 14000171

FLORIDA

Alachua County

Hawthorne Cemetery, FL 20, Hawthorne, 14000172

GEORGIA

Muscogee County

Swift Manufacturing Company, 1410 6th Ave., Columbus, 14000173

IOWA

Bremer County

Waverly East Bremer Avenue Commercial Historic District (Iowa's Main Street Commercial Architecture MPS), Roughly E. Bremer Ave., Waverly, 14000174

Linn County

Cedar Rapids Central Fire Station, 427 1st St., SE., Cedar Rapids, 14000175

MASSACHUSETTS

Bristol County

Oak Grove Cemetery, Parker St., New Bedford, 14000176

Rural Cemetery and Friends Cemetery, 149 Dartmouth St., New Bedford, 14000177

NEBRASKA

Douglas County

Minne Lusa Residential Historic District, Roughly bounded by Redick Ave., Vane, N. 30th & N. 24th Sts., Omaha, 14000178

OREGON

Clackamas County

McLoughlin Promenade (Commercial & Institutional Properties in the Downtown & McLoughlin Areas of Oregon City MPS), Roughly along Singer Hill west of High St., Oregon City, 14000179

Oregon City Carnegie Library (Commercial & Institutional Properties in the Downtown & McLoughlin Areas of Oregon City MPS), 606 John Adams St., Oregon City, 14000180

Oregon City Municipal Elevator (Commercial & Institutional Properties in the Downtown & McLoughlin Areas of Oregon City MPS), 610 Bluff St., Oregon City, 14000181

PENNSYLVANIA

Berks County

Curtis and Jones Company Shoe Factory, 702 N. 8th St., Reading, 14000182

Old Main at the Lutheran Home at Topton, 1 S. Home Ave., Longswamp Township, 14000183

Philadelphia County

Happy Hollow Recreation Center, 4740 Wayne Ave., Philadelphia, 14000184

TENNESSEE

Knox County

Happy Holler Historic District (Knoxville and Knox County MPS), 1200–1209, 1211 N, Central St., 103,105 E. Anderson & 109, 115 W. Anderson Aves., Knoxville, 14000185

A request for removal has been made for the following properties:

NORTH CAROLINA

Wake County

Merrimon House, 526 N. Wilmington St., Raleigh, 75001296

Pugh House, 10018 Chapel Hill Rd., Morrisville, 03000932

WYOMING

Teton County

Leek's Lodge, 10 mi. NW of Moran in Grand Teton National Park off U.S. 89/287, Moran, 75000216

[FR Doc. 2014–07631 Filed 4–4–14; 8:45 am]

BILLING CODE 4312–51–P

INTERNATIONAL TRADE COMMISSION

[Investigation Nos. 701–TA–499–500 and 731–TA–1215–1223 (Final)]

Certain Oil Country Tubular Goods From India, Korea, Philippines, Saudi Arabia, Taiwan, Thailand, Turkey, Ukraine, and Vietnam; Scheduling of the Final Phase of Countervailing Duty and Antidumping Investigations

AGENCY: United States International Trade Commission.

ACTION: Notice.

SUMMARY: The Commission hereby gives notice of the scheduling of the final phase of antidumping and countervailing duty investigation Nos. 701–TA–499–500 and 731–TA–1215–1223 (Final) under sections 705(b) and 731(b) of the Tariff Act of 1930 (19 U.S.C. 1671d(b) and 1673d(b)) (the Act) to determine whether an industry in the United States is materially injured or threatened with material injury, or the establishment of an industry in the United States is materially retarded, by reason of imports from India, Korea, Philippines, Saudi Arabia, Taiwan, Thailand, Turkey, Ukraine, and Vietnam of certain oil country tubular goods, provided for in subheadings 7304.29, 7305.20, and 7306.29 of the Harmonized

Tariff Schedule [1] of the United States, that are sold in the United States at less than fair value [2] and by reason of imports of certain oil country tubular goods that are subsidized by the Governments of India and Turkey.[3]

For further information concerning the conduct of this phase of the investigations, hearing procedures, and rules of general application, consult the Commission's Rules of Practice and Procedure, part 201, subparts A through E (19 CFR part 201), and part 207, subparts A and C (19 CFR part 207).

DATES: *Effective:* Tuesday, February 25, 2014.

FOR FURTHER INFORMATION CONTACT: Michael Szustakowski (202–205–3169), Office of Investigations, U.S. International Trade Commission, 500 E Street SW., Washington, DC 20436. Hearing-impaired persons can obtain information on this matter by contacting the Commission's TDD terminal on 202–205–1810. Persons with mobility impairments who will need special assistance in gaining access to the Commission should contact the Office of the Secretary at 202–205–2000. General information concerning the Commission may also be obtained by accessing its internet server (*http://www.usitc.gov*). The public record for these investigations may be viewed on the Commission's electronic docket (EDIS) at *http://edis.usitc.gov.*

SUPPLEMENTARY INFORMATION:

Background.—The final phase of these investigations is being scheduled as a result of affirmative preliminary determinations by the Department of Commerce that certain benefits which constitute subsidies within the meaning of section 703 of the Act (19 U.S.C. 1671b) are being provided to manufacturers, producers, or exporters in India of certain oil country tubular goods, and that imports of such products from India, Philippines, Saudi Arabia, Taiwan, Thailand, Turkey, Ukraine, and Vietnam are being sold in the United States at less than fair value within the meaning of section 733 of the Act (19 U.S.C. 1673b). The investigations were requested in a petition filed on July 2, 2013, by United States Steel Corporation, Pittsburgh, PA; Maverick Tube Corporation, Houston, TX; Boomerang Tube LLC, Chesterfield, MO; Energex, a division of JMC Steel Group, Chicago, IL; Northwest Pipe Company, Vancouver, WA; Tejas Tubular Products Inc., Houston, TX; TMK IPSCO, Houston, TX; Vallourec Star, L.P., Houston, TX; and Welded Tube USA, Inc.; Lackawanna, NY.

Although the Department of Commerce has preliminarily determined that imports of certain oil country tubular goods from Korea are not being and are not likely to be sold in the United States at less than fair value, for purposes of efficiency the Commission hereby waives rule 207.21(b) [4] so that the final phase of that investigation may proceed concurrently in the event that Commerce makes a final affirmative determination with respect to such imports. Furthermore, while the Department of Commerce has preliminarily determined that countervailable subsidies are not being provided to producers and exporters of certain oil country tubular goods from the Government of Turkey, for purposes of efficiency the Commission hereby waives rule 207.21(b) [5] so that the final phase of that investigation may proceed concurrently in the event that Commerce makes a final affirmative determination with respect to such imports.

Participation in the investigations and public service list.—Persons, including industrial users of the subject merchandise and, if the merchandise is sold at the retail level, representative consumer organizations, wishing to participate in the final phase of these investigations as parties must file an entry of appearance with the Secretary to the Commission, as provided in section 201.11 of the Commission's rules, no later than 21 days prior to the hearing date specified in this notice. A party that filed a notice of appearance during the preliminary phase of the investigations need not file an additional notice of appearance during this final phase. The Secretary will maintain a public service list containing the names and addresses of all persons, or their representatives, who are parties to the investigations.

Limited disclosure of business proprietary information (BPI) under an administrative protective order (APO) and BPI service list.—Pursuant to section 207.7(a) of the Commission's rules, the Secretary will make BPI gathered in the final phase of these investigations available to authorized applicants under the APO issued in the investigations, provided that the application is made no later than 21 days prior to the hearing date specified in this notice. Authorized applicants must represent interested parties, as defined by 19 U.S.C. 1677(9), who are parties to the investigations. A party granted access to BPI in the preliminary phase of the investigations need not reapply for such access. A separate service list will be maintained by the Secretary for those parties authorized to receive BPI under the APO.

Staff report.—The prehearing staff report in the final phase of these investigations will be placed in the nonpublic record on Friday, June 27, 2014, and a public version will be issued thereafter, pursuant to section 207.22 of the Commission's rules.

Hearing.—The Commission will hold a hearing in connection with the final phase of these investigations beginning at 9:30 a.m. on Tuesday, July 15, 2014, at the U.S. International Trade Commission Building. Requests to appear at the hearing should be filed in writing with the Secretary to the Commission on or before Tuesday, July 8, 2014. A nonparty who has testimony that may aid the Commission's deliberations may request permission to present a short statement at the hearing. If deemed necessary, a prehearing conference will be convened on Thursday, July 10, 2014. Oral testimony and written materials to be submitted at the public hearing are governed by sections 201.6(b)(2), 201.13(f), and 207.24 of the Commission's rules. Parties must submit any request to present a portion of their hearing testimony *in camera* no later than 7 business days prior to the date of the hearing.

[1] For purposes of these investigations, the Department of Commerce has defined the subject merchandise as certain oil country tubular goods (OCTG), which are hollow steel products of circular cross-section, including oil well casing and tubing, of iron (other than cast iron) or steel (both carbon and alloy), whether seamless or welded, regardless of end finish (e.g., whether or not plain end, threaded, or threaded and coupled) whether or not conforming to American Petroleum Institute (API) or non-API specifications, whether finished (including limited service OCTG products) or unfinished (including green tubes and limited service OCTG products), whether or not thread protectors are attached. The scope of the investigation also covers OCTG coupling stock. Excluded from the scope of the investigations are: Casing or tubing containing 10.5 percent or more by weight of chromium; drill pipe; unattached couplings; and unattached thread protectors (79 FR 10493, February 25, 2014).

[2] The Department of Commerce has preliminarily determined that imports of certain oil country tubular goods from Korea are not being and are not likely to be sold in the United States at less than fair value.

[3] The Department of Commerce has preliminarily determined that countervailable subsidies are not being provided to producers and exporters of certain oil country tubular goods from the Government of Turkey.

[4] Section 207.21(b) of the Commission's rules provides that, where the Department of Commerce has issued a negative preliminary determination, the Commission will publish a Final Phase Notice of Scheduling upon receipt of an affirmative final determination from Commerce.

[5] Section 207.21(b) of the Commission's rules provides that, where the Department of Commerce has issued a negative preliminary determination, the Commission will publish a Final Phase Notice of Scheduling upon receipt of an affirmative final determination from Commerce.

Written submissions.—Each party who is an interested party shall submit a prehearing brief to the Commission. Prehearing briefs must conform with the provisions of section 207.23 of the Commission's rules; the deadline for filing is Monday, July 7, 2014. Parties may also file written testimony in connection with their presentation at the hearing, as provided in section 207.24 of the Commission's rules, and posthearing briefs, which must conform with the provisions of section 207.25 of the Commission's rules. The deadline for filing posthearing briefs is Tuesday, July 22, 2014. In addition, any person who has not entered an appearance as a party to the investigations may submit a written statement of information pertinent to the subject of the investigations, including statements of support or opposition to the petition, on or before Tuesday, July 22, 2014. On Wednesday, August 6, 2014, the Commission will make available to parties all information on which they have not had an opportunity to comment. Parties may submit final comments on this information on or before Friday, August 8, 2014, but such final comments must not contain new factual information and must otherwise comply with section 207.30 of the Commission's rules. All written submissions must conform with the provisions of section 201.8 of the Commission's rules; any submissions that contain BPI must also conform with the requirements of sections 201.6, 207.3, and 207.7 of the Commission's rules. The Commission's *Handbook on E-Filing,* available on the Commission's Web site at *http://edis.usitc.gov,* elaborates upon the Commission's rules with respect to electronic filing.

Additional written submissions to the Commission, including requests pursuant to section 201.12 of the Commission's rules, shall not be accepted unless good cause is shown for accepting such submissions, or unless the submission is pursuant to a specific request by a Commissioner or Commission staff.

In accordance with sections 201.16(c) and 207.3 of the Commission's rules, each document filed by a party to the investigations must be served on all other parties to the investigations (as identified by either the public or BPI service list), and a certificate of service must be timely filed. The Secretary will not accept a document for filing without a certificate of service.

Authority: These investigations are being conducted under authority of title VII of the Tariff Act of 1930; this notice is published pursuant to section 207.21 of the Commission's rules.

By order of the Commission.

Issued: April 1, 2014.

Lisa R. Barton,

Acting Secretary to the Commission.

[FR Doc. 2014–07568 Filed 4–4–14; 8:45 am]

BILLING CODE 7020–02–P

INTERNATIONAL TRADE COMMISSION

[Investigation No. 337–TA–913]

Certain Hemostatic Products and Components Thereof; Institution of Investigation Pursuant to 19 U.S.C. 1337

AGENCY: U.S. International Trade Commission.

ACTION: Notice.

SUMMARY: Notice is hereby given that a complaint was filed with the U.S. International Trade Commission on February 28, 2014, under section 337 of the Tariff Act of 1930, as amended, 19 U.S.C. 1337, on behalf of Baxter International Inc. of Deerfield, Illinois; Baxter Healthcare Corporation of Deerfield, Illinois; and Baxter Healthcare SA of Switzerland. A letter supplementing the Complaint was filed on March 19, 2014. The complaint alleges violations of section 337 based upon the importation into the United States, the sale for importation, and the sale within the United States after importation of certain hemostatic products and components thereof by reason of infringement of certain claims of U.S. Patent No. 8,303,981 (''the '981 patent''); U.S. Patent No. 8,512,729 (''the '729 patent''); U.S. Patent No. 6,066,325 (''the '325 patent''); U.S. Patent No. 8,357,378 (''the '378 patent''); and U.S. Patent No. 8,603,511 (''the '511 patent''). The complaint further alleges that an industry in the United States exists as required by subsection (a)(2) of section 337.

The complainants request that the Commission institute an investigation and, after the investigation, issue a limited exclusion order and cease and desist orders.

ADDRESSES: The complaint, except for any confidential information contained therein, is available for inspection during official business hours (8:45 a.m. to 5:15 p.m.) in the Office of the Secretary, U.S. International Trade Commission, 500 E Street SW., Room 112, Washington, DC 20436, telephone (202) 205–2000. Hearing impaired individuals are advised that information on this matter can be obtained by contacting the Commission's TDD terminal on (202) 205–1810. Persons with mobility impairments who will need special assistance in gaining access to the Commission should contact the Office of the Secretary at (202) 205–2000. General information concerning the Commission may also be obtained by accessing its Internet server at *http://www.usitc.gov*. The public record for this investigation may be viewed on the Commission's electronic docket (EDIS) at *http://edis.usitc.gov*.

FOR FURTHER INFORMATION CONTACT: The Office of Unfair Import Investigations, U.S. International Trade Commission, telephone (202) 205–2560.

Authority: The authority for institution of this investigation is contained in section 337 of the Tariff Act of 1930, as amended, and in section 210.10 of the Commission's Rules of Practice and Procedure, 19 CFR 210.10 (2013).

Scope of Investigation: Having considered the complaint, the U.S. International Trade Commission, on April 1, 2014, *ordered that*—

(1) Pursuant to subsection (b) of section 337 of the Tariff Act of 1930, as amended, an investigation be instituted to determine whether there is a violation of subsection (a)(1)(B) of section 337 in the importation into the United States, the sale for importation, or the sale within the United States after importation of certain hemostatic products and components thereof by reason of infringement of one or more of claims 1, 2, 4–10, 12–19, and 21–27 of the '981 patent; claims 1–7, 9–16, and 18 of the '729 patent; claims 1–8 of the '325 patent; claims 1–6 of the '378 patent; and claims 1, 2, and 4–9 of the '511 patent, and whether an industry in the United States exists as required by subsection (a)(2) of section 337;

(2) Pursuant to Commission Rule 210.50(b)(1), 19 CFR 210.50(b)(1), the presiding administrative law judge shall take evidence or other information and hear arguments from the parties and other interested persons with respect to the public interest in this investigation, as appropriate, and provide the Commission with findings of fact and a recommended determination on this issue, which shall be limited to the statutory public interest factors set forth in 19 U.S.C. 1337(d)(1), (f)(1), (g)(1);

(3) For the purpose of the investigation so instituted, the following are hereby named as parties upon which this notice of investigation shall be served:

(a) The complainants are:

Baxter International Inc., One Baxter Parkway, Deerfield, IL 60015–4625.

Baxter Healthcare Corporation, One Baxter Parkway, Deerfield, IL 60015–4625.

Baxter Healthcare SA, Thurgauerstrasse 130, Glattpark (Opfikon), Switzerland.

(b) The respondents are the following entities alleged to be in violation of section 337, and are the parties upon which the complaint is to be served:

Johnson & Johnson, One Johnson & Johnson Plaza, Brunswick, NJ 08933.

Ethicon, Inc., Route 22 West, Somerville, NJ 08876.

Ferrosan Medical Devices A/S, Sydmarken 5, DK–2860 Soeborg, Denmark.

Packaging Coordinators, Inc. 3001 Red Lion Road Philadelphia, PA 19144.

(c) The Office of Unfair Import Investigations, U.S. International Trade Commission, 500 E Street SW., Suite 401, Washington, DC 20436; and

(4) For the investigation so instituted, the Chief Administrative Law Judge, U.S. International Trade Commission, shall designate the presiding Administrative Law Judge.

Responses to the complaint and the notice of investigation must be submitted by the named respondents in accordance with section 210.13 of the Commission's Rules of Practice and Procedure, 19 CFR 210.13. Pursuant to 19 CFR 201.16(e) and 210.13(a), such responses will be considered by the Commission if received not later than 20 days after the date of service by the Commission of the complaint and the notice of investigation. Extensions of time for submitting responses to the complaint and the notice of investigation will not be granted unless good cause therefor is shown.

Failure of a respondent to file a timely response to each allegation in the complaint and in this notice may be deemed to constitute a waiver of the right to appear and contest the allegations of the complaint and this notice, and to authorize the administrative law judge and the Commission, without further notice to the respondent, to find the facts to be as alleged in the complaint and this notice and to enter an initial determination and a final determination containing such findings, and may result in the issuance of an exclusion order or a cease and desist order or both directed against the respondent.

Issued: April 1, 2014.

By order of the Commission.

Lisa R. Barton,

Acting Secretary to the Commission.

[FR Doc. 2014–07678 Filed 4–4–14; 8:45 am]

BILLING CODE 7020–02–P

DEPARTMENT OF LABOR

Occupational Safety and Health Administration

[Docket No. OSHA–2011–0029]

Underground Construction Standard; Extension of the Office of Management and Budget's (OMB) Approval of Information Collection (Paperwork) Requirements

AGENCY: Occupational Safety and Health Administration (OSHA), Labor.

ACTION: Request for public comments.

SUMMARY: OSHA solicits public comments concerning its proposal to extend OMB's approval of the information collection requirements specified in its Standard on Underground Construction (29 CFR 1926.800).

DATES: Comments must be submitted (postmarked, sent or received) by June 6, 2014.

ADDRESSES:

Electronically: You may submit comments and attachments electronically at *http://www.regulations.gov,* which is the Federal eRulemaking Portal. Follow the instructions online for submitting comments.

Facsimile: If your comments, including attachments, are not longer than 10 pages you may fax them to the OSHA Docket Office at (202) 693–1648.

Mail, hand delivery, express mail, messenger, or courier service: When using this method, you must submit a copy of your comments and attachments to the OSHA Docket Office, Docket No. OSHA–2011–0029, U.S. Department of Labor, Occupational Safety and Health Administration, Room N–2625, 200 Constitution Avenue NW., Washington, DC 20210. Deliveries (hand, express mail, messenger, and courier service) are accepted during the Department of Labor's and Docket Office's normal business hours, 8:15 a.m. to 4:45 p.m., e.t.

Instructions: All submissions must include the Agency name and the OSHA docket number (OSHA–2011–0029) for the Information Collection Request (ICR). All comments, including any personal information you provide, are placed in the public docket without change, and may be made available online at *http://www.regulations.gov.* For further information on submitting comments see the ''Public Participation'' heading in the section of this notice titled **SUPPLEMENTARY INFORMATION.**

Docket: To read or download comments or other materials in the docket, go to *http://regulations.gov* or the OSHA Docket Office at the address above. All documents in the docket (including this **Federal Register** notice) are listed in the *http://www.regulations.gov* index; however, some information (*e.g.,* copyrighted material) is not publically available to read or download from the Web site. All submissions, including copyrighted material, are available for inspection and copying at the OSHA Docket Office. You may contact Theda Kenney at the address below to obtain a copy of the ICR.

FOR FURTHER INFORMATION CONTACT: Todd Owen or Theda Kenney, Directorate of Standards and Guidance, OSHA, U.S. Department of Labor, Room N–3609, 200 Constitution Avenue NW., Washington, DC 20210; telephone (202) 693–2222.

SUPPLEMENTARY INFORMATION:

I. Background

The Department of Labor, as part of its continuing effort to reduce paperwork and respondent (i.e., employer) burden, conducts a preclearance consultation program to provide the public with an opportunity to comment on proposed and continuing information collection requirements in accord with the Paperwork Reduction Act of 1995 (PRA–95) (44 U.S.C. 3506(c)(2)(A)). This program ensures that information is in the desired format, reporting burden (time and costs) is minimal, collection instruments are clearly understood, and OSHA's estimate of the information collection burden is accurate. The Occupational Safety and Health Act of 1970 (the OSH Act) (29 U.S.C. 651 et seq.) authorizes information collection by employers as necessary or appropriate for enforcement of the OSH Act or for developing information regarding the causes and prevention of occupational injuries, illnesses, and accidents (29 U.S.C. 657). The OSH Act also requires that OSHA obtain such information with minimum burden upon employers, especially those operating small businesses, and to reduce to the maximum extent feasible unnecessary duplication of efforts in obtaining information (29 U.S.C. 657).

Seven paragraphs in the Underground Construction Standard (''the Standard''), 29 CFR 1926.800, require employers to post warning signs or notices during underground construction; these paragraphs are (b)(3), (i)(3), (j)(1)(vi)(A), (m)(2)(ii), (o)(2), (q)(11), and (t)(1)(iv)(B). The warning signs and notices required by these paragraphs enable employers to effectively alert workers to the presence of hazards or potential hazards at the job

site, thereby preventing worker exposure to hazards or potential hazards associated with underground construction that could cause death or serious harm.

Paragraph (t)(3)(xxi) of the Standard requires employers to inspect and load test hoists when they install them, and at least annually thereafter; they must also inspect and load test a hoist after making any repairs or alterations to it that affect its structural integrity, and after tripping a safety device on the hoist. Employers must also prepare a certification record of each inspection and load test that includes specified information, and maintain the most recent certification record until they complete the construction project.

Establishing and maintaining a written record of the most recent inspection and load test alerts equipment mechanics to problems identified during the inspection. Prior to returning the equipment to service, employers can review the records to ensure that the mechanics performed the necessary repairs and maintenance. Accordingly, by using only equipment that is in safe working order, employers will prevent severe injury and death to the equipment operators and other workers who work near the equipment. In addition, these records provide the most efficient means for OSHA compliance officers to determine that an employer performed the required inspections and load tests, thereby assuring that the equipment is safe to operate.

Paragraph (j)(3) of the Standard mandates that employers develop records for air quality tests performed under paragraph (j), including air quality tests required by paragraphs (j)(1)(ii)(A) through (j)(1)(iii)(A), (j)(1)(iii)(B), (j)(1)(iii)(C), (j)(1)(iii)(D), (j)(1)(iv), (j)(1)(v)(A), (j)(1)(v)(B), and (j)(2)(i) through (j)(2)(v). Paragraph (j) also requires that air quality records include specified information, and that employers maintain the records until the underground construction project is complete; they must also make the records available to OSHA compliance officers on request.

Maintaining records of air quality tests allows employers to document atmospheric hazards, and to ascertain the effectiveness of controls (especially ventilation) and implement additional controls if necessary. Accordingly, these requirements prevent serious injury and death to workers who work on underground construction projects. In addition, these records provide an efficient means for workers to evaluate the accuracy and effectiveness of an employer's exposure reduction program, and for OSHA compliance officers to determine that employers performed the required tests and implemented appropriate controls.

II. Special Issues for Comment

OSHA has a particular interest in comments on the following issues:

- Whether the proposed information collection requirements are necessary for proper performance of the Agency's functions, including whether the information is useful;
- The accuracy of OSHA's estimate of the burden (time and costs) of the information collection requirements, including the validity of the methodology and assumptions used;
- The quality, utility, and clarity of the information collected; and
- Ways to minimize the burden on employers who must comply; for example, by using automated or other technological information collection and transmission techniques.

III. Proposed Actions

OSHA is requesting an adjustment increase of 8,982 burden hours (from 57,949 to 66,931 burden hours). The adjustment increase is a result of an increase in the number of construction projects from 323 to 361. In addition, there is an increase in the cost from $117,000 to $129,600 (an increase of $12,600). This cost increase is the result of additional construction projects. The Agency will summarize the comments submitted in response to this notice and will include this summary in the request to OMB to extend the approval of the information collection requirements.

Type of Review: Extension of a currently approved collection.

Title: Underground Construction Standard (29 CFR 1926.800).

OMB Control Number: 1218–0067.

Affected Public: Business or other for-profits; not-for-profit institutions; Federal government; State, local or Tribal governments.

Number of Responses: 1,078,029.

Frequency of Responses: On occasion.

Average Time per Response: Varies from 30 seconds to read and record air quality test results to one hour to inspect, load test, and complete and maintain a certification record for a hoist.

Estimated Total Burden Hours: 66,931.

Estimated Cost (Operation and Maintenance): $129,600.

IV. Public Participation—Submission of Comments on This Notice and Internet Access to Comments and Submissions

You may submit comments in response to this document as follows: (1) Electronically at *http://regulations.gov,* which is the Federal eRulemaking Portal; (2) by facsimile (fax); or (3) by hard copy. All comments, attachments, and other materials must identify the Agency name and the OSHA docket number for the ICR (Docket No. OSHA–2011–0029). You may supplement electronic submissions by uploading document files electronically. If you wish to mail additional materials in reference to an electronic or facsimile submission, you must submit them to the OSHA Docket Office (see the section of this notice titled **ADDRESSES**). The additional materials must clearly identify your electronic comments by your name, date, and the docket number so the Agency can attach them to your comments.

Because of security procedures, the use of regular mail may cause a significant delay in the receipt of comments. For information about security procedures concerning the delivery of materials by hand, express delivery, messenger, or courier service, please contact the OSHA Docket Office at (202) 693–2350, (TTY (877) 889–5627).

Comments and submissions are posted without change at *http://www.regulations.gov.* Therefore, OSHA cautions commenters about submitting personal information such as social security numbers and date of birth. Although all submissions are listed in the *http://www.regulations.gov* index, some information (e.g., copyrighted material) is not publically available to read or download from this Web site. All submissions, including copyrighted material, are available for inspection and copying at the OSHA Docket Office. Information on using the *http://www.regulations.gov* Web site to submit comments and access the docket is available at the Web site's ''User Tips'' link. Contact the OSHA Docket Office for information about materials not available from the Web site, and for assistance in using the Internet to locate docket submissions.

V. Authority and Signature

David Michaels, Ph.D., MPH, Assistant Secretary of Labor for Occupational Safety and Health, directed the preparation of this notice. The authority for this notice is the Paperwork Reduction Act of 1995 (44 U.S.C. 3506 et seq.) and Secretary of Labor's Order No. 1–2012 (77 FR 3912).

Signed at Washington, DC, on April 1, 2014.

David Michaels,

Assistant Secretary of Labor for Occupational Safety and Health.

[FR Doc. 2014–07630 Filed 4–4–14; 8:45 am]

BILLING CODE 4510–26–P

NATIONAL FOUNDATION ON THE ARTS AND THE HUMANITIES

National Endowment for the Arts

Proposed Collection; Comment Request

ACTION: Notice.

SUMMARY: The National Endowment for the Arts (NEA), as part of its continuing effort to reduce paperwork and respondent burden, conducts a preclearance consultation program to provide the general public and federal agencies with an opportunity to comment on proposed and/or continuing collections of information in accordance with the Paperwork Reduction Act of 1995 (PRA95) [44 U.S.C. 3506(c)(A)]. This program helps to ensure that requested data can be provided in the desired format, reporting burden (time and financial resources) is minimized, collection instruments are clearly understood, and the impact of collection requirements on respondents can be properly assessed. Currently, the NEA is soliciting comments concerning the proposed information collection on arts participation in the U.S. A copy of the current information collection request can be obtained by contacting the office listed below in the address section of this notice.

DATES: Written comments must be submitted to the office listed in the address section below on or before June 1, 2014. The NEA is particularly interested in comments which:

- Evaluate whether the proposed collection of information is necessary for the proper performance of the functions of the agency, including whether the information will have practical utility;
- Evaluate the accuracy of the agency's estimate of the burden of the proposed collection of information including the validity of the methodology and assumptions used;
- Enhance the quality, utility, and clarity of the information to be collected; and
- Minimize the burden of the collection of information on those who are to respond, including through the use of appropriate automated, electronic, mechanical, or other technological collection techniques or other forms of information technology, e.g., permitting electronic submissions of responses.

ADDRESSES: Mail comments to: Sunil Iyengar, National Endowment for the Arts, 1100 Pennsylvania Avenue NW., Room 616, Washington, DC 20506–0001, telephone (202) 682–5424 (this is not a toll-free number), fax (202) 682–5677 or send them via email to *research@arts.gov.*

Dated: April 2, 2014.

Kathy Plowitz-Worden,

Office of Guidelines and Panel Operations, National Endowment for the Arts.

[FR Doc. 2014–07645 Filed 4–4–14; 8:45 am]

BILLING CODE 7537–01–P

NATIONAL SCIENCE FOUNDATION

Notice of Permit Emergency Provision Under the Antarctic Conservation Act of 1978 (Pub. L. 95–541)

AGENCY: National Science Foundation.

ACTION: Notice of permit emergency provision for hazardous waste stored in Antarctica at McMurdo Station for more than 15 months due to an emergency, as specified by § 671.17.

SUMMARY: The Program of Environment Safety and Health in the Division of Polar Programs in accordance with § 671.17, is giving notice that an emergency relating to considerations of human health and safety and ship safety caused hazardous waste to be stored at McMurdo Station for more than 15 months.

Hazardous waste in the form of batteries (1,600 lbs), biomedical waste from the clinic (4,500 lbs), chemical waste (31,000 lbs), compressed gases (2,000 lbs), hazardous debris (18,000 lbs), glycol (65,500 lbs), PCBs from cleanup of historic activities (1,100 lbs), petroleum products (132,600 lbs), radioactive material from scientific research (1,200 lbs) and solvents/paints (3,200 lbs) was segregated and packaged for removal from McMurdo Station at the end of the 2013–2014 season and was to be removed from the station in February 2014.

On 6 February 2014, cargo operations to load the containers containing the segregated and packaged waste from the ice pier onto the *M/V Maersk Illinois* were suspended due to safety issues. Conditions of very high winds (30 knots sustained and up to 50 knot gusts) and severe wave action made operations on the ice pier dangerous. Throughout the course of the two day storm, several of the lines from the ship to the ice pier parted and the ice pier fractured into multiple pieces. A short lull in the storm on 7 February provided the ship the opportunity to safely pull away from the ice pier. The storm brought an increasing number of icebergs to the area and in the interest of safety, the ship proceeded north away from McMurdo Station. Once the storm had subsided, the broken ice pier was found to be unfit for further operations and all containers (including those containing the packaged hazardous waste) which had not been previously loaded onto the cargo ship remained on station. The packaged waste material has been secured until removal during the 2014–2015 season.

FOR FURTHER INFORMATION CONTACT: Dr. Polly A. Penhale at (703) 292–7420.

Nadene G. Kennedy,

Polar Coordination Specialist, Division of Polar Programs.

[FR Doc. 2014–07668 Filed 4–4–14; 8:45 am]

BILLING CODE 7555–01–P

NUCLEAR REGULATORY COMMISSION

[NRC–2014–0001]

Sunshine Act Meeting Notice

DATE: Weeks of April 7, 14, 21, 28, May 5, 12, 2014.

PLACE: Commissioners' Conference Room, 11555 Rockville Pike, Rockville, Maryland.

STATUS: Public and Closed.

Week of April 7, 2014

Thursday, April 10, 2014

8:55 a.m.—Affirmation Session (Public Meeting) (Tentative)

Aerotest Operations, Inc. (Aerotest Radiography and Research Reactor), Joint Demand for Hearing on Denial of License Renewal and Indirect License Transfer Regarding Aerotest Radiography and Research Reactor Facility Operating License No. R–98 (Aug. 13, 2013); Joint Answer to and Demand for Hearing on Order Prohibiting Operation of Aerotest Radiography and Research Reactor Facility Operating License No. R–98 (Aug. 13, 2013); NRC Staff Motion to Sever the Demand for Hearing on Denial of License Renewal from the Demand for Hearing on Indirect License Transfer Regarding Aerotest Radiography and Research Reactor (Aug. 21, 2013). (Tentative)

This meeting will be webcast live at the Web address—*http://www.nrc.gov/.*

9 a.m.—Meeting with Organization of Agreement States (OAS) and Conference of Radiation Control Program Directors (CRCPD) (Public Meeting) (Contact: Cindy Flannery, 301–415–0223)

This meeting will be webcast live at the Web address—*http://www.nrc.gov/.*

Week of April 14, 2014—Tentative

There are no meetings scheduled for the week of April 14, 2014.

Week of April 21, 2014—Tentative

There are no meetings scheduled for the week of April 21, 2014.

Week of April 28, 2014—Tentative

There are no meetings scheduled for the week of April 28, 2014.

Week of May 5, 2014—Tentative

Thursday, May 8, 2014

9 a.m.—Briefing on Subsequent License Renewal (Public Meeting) (Contact: William (Butch) Burton, 301–415–6332)

This meeting will be webcast live at the Web address—*http://www.nrc.gov/.*

Friday, May 9, 2014

9 a.m.—Meeting with the Advisory Committee on the Medical Uses of Isotopes (Public Meeting) (Contact: Sophie Holiday, 301–415–7865)

This meeting will be webcast live at the Web address—*http://www.nrc.gov/.*

Week of May 12, 2014—Tentative

Monday, May 12, 2014

9:30 a.m.—Briefing on NRC International Activities (Closed—Ex. 1 & 9)

* * * * *

The schedule for Commission meetings is subject to change on short notice. To verify the status of meetings, call (recording)—301–415–1292. Contact person for more information: Rochelle Bavol, 301–415–1651.

* * * * *

The NRC Commission Meeting Schedule can be found on the Internet at: *http://www.nrc.gov/public-involve/public-meetings/schedule.html.*

* * * * *

The NRC provides reasonable accommodation to individuals with disabilities where appropriate. If you need a reasonable accommodation to participate in these public meetings, or need this meeting notice or the transcript or other information from the public meetings in another format (e.g. braille, large print), please notify Kimberly Meyer, NRC Disability Program Manager, at 301–287–0727, or by email at *Kimberly.Meyer-Chambers@nrc.gov.* Determinations on requests for reasonable accommodation will be made on a case-by-case basis.

* * * * *

Members of the public may request to receive this information electronically. If you would like to be added to the distribution, please contact the Office of the Secretary, Washington, DC 20555 (301–415–1969), or send an email to *Darlene.Wright@nrc.gov.*

Dated: April 3, 2014.

Rochelle Bavol,

Policy Coordinator, Office of the Secretary.

[FR Doc. 2014–07797 Filed 4–3–14; 11:15 am]

BILLING CODE 7590–01–P

SECURITIES AND EXCHANGE COMMISSION

Proposed Collection; Comment Request

Upon Written Request, Copies Available From: Securities and Exchange Commission, Office of Investor Education and Advocacy, Washington, DC 20549–0213.

Extension:

Rule 15c2–11; SEC File No. 270–196, OMB Control No. 3235–0202.

Notice is hereby given that, pursuant to the Paperwork Reduction Act of 1995 (44 U.S.C. 3501 *et seq.*) (''PRA''), the Securities and Exchange Commission (''Commission'') is soliciting comments on the existing collection of information provided for in Rule 15c2–11, (17 CFR 240.15c2–11), under the Securities Exchange Act of 1934 (15 U.S.C. 78a *et seq.*) (''Exchange Act''). The Commission plans to submit this existing collection of information to the Office of Management and Budget (''OMB'') for extension and approval.

Rule 15c2–11 under the Securities Exchange Act regulates the initiation or resumption of quotations in a quotation medium by a broker-dealer for over-the-counter (''OTC'') securities. The Rule was designed primarily to prevent certain manipulative and fraudulent trading schemes that had arisen in connection with the distribution and trading of unregistered securities issued by shell companies or other companies having outstanding but infrequently traded securities. Subject to certain exceptions, the Rule prohibits broker-dealers from publishing a quotation for a security, or submitting a quotation for publication, in a quotation medium unless they have reviewed specified information concerning the security and the issuer.

Based on information provided by Financial Industry Regulatory Authority, Inc. (''FINRA''), in the 2013 calendar year, FINRA received approximately 1,009 applications from broker-dealers to initiate or resume publication of quotations of covered OTC securities on the OTC Bulletin Board and/or OTC Link or other quotation mediums. We estimate that (i) 31% of the covered OTC securities were issued by reporting issuers, while the other 69% were issued by non-reporting issuers, and (ii) it will take a broker-dealer about 4 hours to review, record and retain the information pertaining to a reporting issuer, and about 8 hours to review, record and retain the information pertaining to a non-reporting issuer.

We therefore estimate that broker-dealers who initiate or resume publication of quotations for covered OTC securities of reporting issuers will require 1,236 hours ($1,009 \times 31\% \times 4$) to review, record and retain the information required by the Rule. We estimate that broker-dealers who initiate or resume publication of quotations for covered OTC securities of non-reporting issuers will require 5,600 hours ($1,009 \times 69\% \times 8$) to review, record and retain the information required by the Rule. Thus, we estimate the total annual burden hours for broker-dealers to initiate or resume publication of quotations of covered OTC securities to be 6,836 hours (1,236 + 5,600). The Commission believes that these 6,836 hours would be borne by internal staff working at a rate of $53 per hour.[1]

Subject to certain exceptions, the Rule prohibits broker-dealers from publishing a quotation for a security, or submitting a quotation for publication, in a quotation medium unless they have reviewed specified information concerning the security and the issuer. The broker-dealer must also make the information reasonably available upon request to any person expressing an interest in a proposed transaction in the security with such broker or dealer. The collection of information that is submitted to FINRA for review and approval is currently not available to the public from FINRA.

Written comments are invited on: (a) Whether the proposed collection of information is necessary for the proper performance of the functions of the Commission, including whether the information shall have practical utility; (b) the accuracy of the Commission's estimates of the burden of the proposed collection of information; (c) ways to

[1] *See* Appendix C, SIFMA Office Salaries Data—Sept. 2012 for General Clerk national hourly rate.

enhance the quality, utility, and clarity of the information collected; and (d) ways to minimize the burden of the collection of information on respondents, including through the use of automated collection techniques or other forms of information technology. Consideration will be given to comments and suggestions submitted in writing within 60 days of this publication.

An agency may not conduct or sponsor, and a person is not required to respond to, a collection of information under the PRA unless it displays a currently valid OMB control number.

Please direct your written comments to: Thomas Bayer, Director/Chief Information Officer, Securities and Exchange Commission, c/o Remi Pavlik-Simon, 100 F Street NE., Washington, DC 20549, or send an email to: *PRA_Mailbox@sec.gov.*

Dated: April 2, 2014.

Kevin M. O'Neill,

Deputy Secretary.

[FR Doc. 2014–07655 Filed 4–4–14; 8:45 am]

BILLING CODE 8011–01–P

SECURITIES AND EXCHANGE COMMISSION

Proposed Collection; Comment Request

Upon Written Request Copies Available From: Securities and Exchange Commission, Office of Investor Education and Advocacy, Washington, DC 20549–0213.

Extension:

Electronic Data Collection System, OMB Control No. 3235–0672, SEC File No. 270–621.

Notice is hereby given that, pursuant to the Paperwork Reduction Act of 1995 (44 U.S.C. 3501 *et seq.*), the Securities and Exchange Commission (''Commission'') is soliciting comments on the collection of information summarized below. The Commission plans to submit an extension for this current collection of information to the Office of Management and Budget for approval.

The Securities and Exchange Commission has developed an Electronic Data Collection System database (the Database) and invites comment on the Database that will support information provided by the general public that would like to file a tip or complaint with the SEC. The Database will be a web based e-filed dynamic report based on technology that pre-populates and establishes a series of questions based on the data that the individual enters. The individual will then complete specific information on the subject(s) and nature of the suspicious activity, using the data elements appropriate to the type of complaint or subject. The information collection is voluntary. The public interface to the Database will be available using the agency's Web site *www.sec.gov*. Information is voluntary.

Estimated number of annual responses = 38,955.

Estimated annual reporting burden = 19,478 hours (30 minutes per submission).

Written comments are invited on: (a) Whether this collection of information is necessary for the proper performance of the functions of the agency, including whether the information will have practical utility; (b) the accuracy of the agency's estimate of the burden imposed by the collection of information; (c) ways to enhance the quality, utility, and clarity of the information collected; and (d) ways to minimize the burden of the collection of information on respondents, including through the use of automated collection techniques or other forms of information technology.

Consideration will be given to comments and suggestions submitted in writing within 60 days of this publication. Please direct your written comments to Thomas Bayer, Director/Chief Information Officer, Securities and Exchange Commission, c/o Remi Pavlik-Simon, 100 F St. NE., Washington DC 20549; or send an email to: *PRA_Mailbox@sec.gov*.

Dated: April 2, 2014.

Kevin M. O'Neill,

Deputy Secretary.

[FR Doc. 2014–07656 Filed 4–4–14; 8:45 am]

BILLING CODE 8011–01–P

SECURITIES AND EXCHANGE COMMISSION

Sunshine Act Meeting

Notice is hereby given, pursuant to the provisions of the Government in the Sunshine Act, Public Law 94–409, that the Securities and Exchange Commission will hold a Closed Meeting on Thursday, April 10, 2014 at 2 p.m.

Commissioners, Counsel to the Commissioners, the Secretary to the Commission, and recording secretaries will attend the Closed Meeting. Certain staff members who have an interest in the matters also may be present.

The General Counsel of the Commission, or her designee, has certified that, in her opinion, one or more of the exemptions set forth in 5 U.S.C. 552b(c)(3), (5), (7), 9(B) and (10) and 17 CFR 200.402(a)(3), (5), (7), 9(ii) and (10), permit consideration of the scheduled matter at the Closed Meeting.

Commissioner Aguilar, as duty officer, voted to consider the items listed for the Closed Meeting in closed session.

The subject matter of the Closed Meeting will be:

Institution and settlement of injunctive actions;

institution and settlement of administrative proceedings;

adjudicatory matters; and

other matters relating to enforcement proceedings.

At times, changes in Commission priorities require alterations in the scheduling of meeting items.

For further information and to ascertain what, if any, matters have been added, deleted or postponed, please contact the Office of the Secretary at (202) 551–5400.

Dated: April 3, 2014.

Kevin M. O'Neill,

Deputy Secretary.

[FR Doc. 2014–07840 Filed 4–3–14; 4:15 pm]

BILLING CODE 8011–01–P

SECURITIES AND EXCHANGE COMMISSION

[Release No. 34–71841; File No. SR–BX–2014–015]

Self-Regulatory Organizations; NASDAQ OMX BX, Inc.; Notice of Filing and Immediate Effectiveness of Proposed Rule Change To Impose an Extranet Access Fee

April 1, 2014.

Pursuant to Section 19(b)(1) of the Securities Exchange Act of 1934 (''Act''),[1] and Rule 19b–4 thereunder,[2] notice is hereby given that on March 28, 2014, NASDAQ OMX BX, Inc. (''BX'' or ''Exchange'') filed with the Securities and Exchange Commission (''SEC'' or ''Commission'') the proposed rule change as described in Items I, II, and III, below, which Items have been prepared by the Exchange. The Commission is publishing this notice to solicit comments on the proposed rule change from interested persons.

I. Self-Regulatory Organization's Statement of the Terms of the Substance of the Proposed Rule Change

The Exchange proposes to modify the extranet access fee (''Extranet Access Fee'') set forth in BX Rule 7025. BX will implement the proposed revised fee on April 1, 2014.

[1] 15 U.S.C. 78s(b)(1).

[2] 17 CFR 240.19b–4.

The text of the proposed rule change is below. Proposed new language is italicized; proposed deletions are bracketed.[3]

* * * * *

7025. Extranet Access Fee

Extranet providers that establish a connection with the Exchange to offer direct access connectivity to market data feeds shall [not] be assessed a monthly access fee *of $750* per client organization Customer Premises Equipment (''CPE'') Configuration. For purposes of this Rule 7025, the term ''Customer Premises Equipment Configuration'' shall mean any line, circuit, router package, or other technical configuration used by an extranet provider to provide a direct access connection to the Exchange market data feeds to a recipient's site. No extranet access fee will be charged for connectivity to market data feeds containing only consolidated data. For purposes of this rule, consolidated data includes data disseminated by the UTP SIP.

* * * * *

II. Self-Regulatory Organization's Statement of the Purpose of, and Statutory Basis for, the Proposed Rule Change

In its filing with the Commission, the Exchange included statements concerning the purpose of and basis for the proposed rule change and discussed any comments it received on the proposed rule change. The text of these statements may be examined at the places specified in Item IV below. The Exchange has prepared summaries, set forth in sections A, B, and C below, of the most significant aspects of such statements.

A. Self-Regulatory Organization's Statement of the Purpose of, and Statutory Basis for, the Proposed Rule Change

1. Purpose

The Exchange is proposing to impose an Extranet Access Fee as set forth in BX Rule 7025. BX Rule 7025 currently does not include a monthly access fee per recipient Customer Premises Equipment (''CPE'') Configuration.[4] Specifically, the Exchange proposes to charge a $750 per recipient CPE Configuration per month.

As discussed in a recent filing,[5] initially an Extranet Access Fee of $750 per recipient CPE Configuration per month was put in place in 2009,[6] but the service was provided for free during the first year of operation of the Exchange's venue for trading cash equities. At the end of the one-year period, the initial fee of $750 per recipient CPE Configuration per month remained in place, but it inadvertently was never billed.

Subsequently, the Exchange filed to increase the fee of $750 per recipient CPE Configuration per month to $1,000.[7] Shortly after increasing the fee, the Exchange discovered that the Extranet Access Fee had never been billed so the Exchange determined to file and to eliminate the fee [sic]. The Exchange believed that since recipients had yet to actually pay an Extranet Access Fee, it would be burdensome for recipients to start-off paying $1,000 per recipient CPE Configuration per month. However, the Exchange has now had the necessary time to assess the need for the Extranet Access Fee and determined that it cannot completely absorb its costs associated with maintaining multiple extranet connections with multiple providers. Accordingly, the Exchange now seeks to charge recipients the fee originally proposed in 2009 of $750 per recipient CPE Configuration per month.

As stated above, this fee increase will be used to help support the Exchange's costs associated with maintaining multiple extranet connections with multiple providers. These costs include those associated with overhead and technology infrastructure, administrative, maintenance and operational costs. Since the inception of accessing data through extranets, there had been numerous network infrastructure improvements and administrative controls enacted. The Exchange has additionally implemented compressed TCP/IP options, which allows customers to use reduced bandwidth and [sic] lower carrying costs. Additionally, the Exchange has implemented automated retransmission facilities for most of its data clients that benefit extranet clients by reducing operational costs associated with retransmissions.

As the number of extranets has increased, the Exchange's management of the downstream customers has expanded and the Exchange has had to ensure appropriate reporting and review processes, which has resulted in a greater cost burden on the Exchange over time. The fee will also help to ensure that the Exchange is better able to closely review reports and uncover reporting errors via audits thus minimizing reporting issues. The network infrastructure has increased in order to keep pace with the increased number of products, which, in turn, has caused an increased administrative burden and higher operational costs associated with delivery via extranets.

2. Statutory Basis

The Exchange believes that the proposed rule change is consistent with Section 6(b) of the Act,[8] in general, and with Section 6(b)(4) of the Act,[9] in particular, in that it provides for the equitable allocation of reasonable dues, fees and other charges among members and issuers and other persons using any facility or system which the Exchange operates or controls.

All similarly situated extranet providers, including the Exchange operating its own extranet, that establish an extranet connection with the Exchange to access market data feeds from the Exchange are subject to the same fee structure. As noted above, this fee is the same as the originally proposed Extranet Access Fee in 2009 of $750 per recipient CPE Configuration per month. The fee will help the Exchange offset some of the overhead and technology infrastructure, administrative, maintenance and operational costs it incurs in support of the service.

As such, the Exchange believes that the proposed fee is reasonable and notes it is the same as originally proposed in 2009. The extranet costs are separate and different from the colocation facility that is able to recoup these fees by charging for servers, rack space, electricity, etc. within the associated data centers.

B. Self-Regulatory Organization's Statement on Burden on Competition

The Exchange does not believe that the proposed rule change will result in any burden on competition that is not necessary or appropriate in furtherance of the purposes of the Act, as amended.

The fee will be applied uniformly among extranet providers, which are not compelled to establish a connection

[3] Changes are marked to the rules of NASDAQ OMX BX, Inc. found at *http://nasdaqomxbx.cchwallstreet.com*

[4] *See* Securities Exchange Act Release No. 71506 (February 7, 2014), 79 FR 8769 (February 13, 2014) (SR–BX–2014–008). As defined in BX Rule 7025, a ''Customer Premises Equipment Configuration'' means any line, circuit, router package, or other technical configuration used by an extranet provider to provide a direct access connection to the Exchange market data feeds to a recipient's site.

[5] *See* Securities Exchange Act Release No. 71506 (February 7, 2014), 79 FR 8769 (February 13, 2014) (SR–BX–2014–008). *See also* Securities Exchange Act Release No. 59615 (March 20, 2009), 74 FR 14604 (March 31, 2009) (SR–BX–2009–005).

[6] *See* Securities Exchange Act Release No. 59615 (March 20, 2009), 74 FR 14604 (March 31, 2009) (SR–BX–2009–005).

[7] *See supra* note 3.

[8] 15 U.S.C. 78f(b).

[9] 15 U.S.C. 78f(b)(4).

with the Exchange to offer access connectivity to market data feeds. For these reasons, any burden arising from the fees is necessary in the interest of promoting the equitable allocation of a reasonable fee. Additionally, firms make decisions on how much and what types of data to consume on the basis of the total cost of interacting with the Exchange or other exchanges and, of course, the extranet access fee is but one factor in a total platform analysis.

C. Self-Regulatory Organization's Statement on Comments on the Proposed Rule Change Received From Members, Participants, or Others

No written comments were either solicited or received.

III. Date of Effectiveness of the Proposed Rule Change and Timing for Commission Action

The foregoing rule change has become effective pursuant to Section 19(b)(3)(A)(ii) of the Act.[10] At any time within 60 days of the filing of the proposed rule change, the Commission summarily may temporarily suspend such rule change if it appears to the Commission that such action is necessary or appropriate in the public interest, for the protection of investors, or otherwise in furtherance of the purposes of the Act. If the Commission takes such action, the Commission shall institute proceedings to determine whether the proposed rule should be approved or disapproved.

IV. Solicitation of Comments

Interested persons are invited to submit written data, views, and arguments concerning the foregoing, including whether the proposed rule change is consistent with the Act. Comments may be submitted by any of the following methods:

Electronic Comments

- Use the Commission's Internet comment form (*http://www.sec.gov/rules/sro.shtml);* or
- Send an email to *rule-comments@sec.gov.* Please include File Number SR–BX–2014–015 on the subject line.

Paper Comments

- Send paper comments in triplicate to Secretary, Securities and Exchange Commission, 100 F Street NE., Washington, DC 20549–1090.

All submissions should refer to File Number SR–BX–2014–015. This file number should be included on the subject line if email is used. To help the Commission process and review your comments more efficiently, please use only one method. The Commission will post all comments on the Commission's Internet Web site (*http://www.sec.gov/rules/sro.shtml).*

Copies of the submission, all subsequent amendments, all written statements with respect to the proposed rule change that are filed with the Commission, and all written communications relating to the proposed rule change between the Commission and any person, other than those that may be withheld from the public in accordance with the provisions of 5 U.S.C. 552, will be available for Web site viewing and printing in the Commission's Public Reference Room, 100 F Street, NE., Washington, DC 20549, on official business days between the hours of 10:00 a.m. and 3:00 p.m. Copies of the filing also will be available for inspection and copying at the principal office of the Exchange. All comments received will be posted without change; the Commission does not edit personal identifying information from submissions. You should submit only information that you wish to make available publicly.

All submissions should refer to File Number SR–BX–2014–015 and should be submitted on or before April 28, 2014.

For the Commission, by the Division of Trading and Markets, pursuant to delegated authority.[11]

Kevin M. O'Neill,

Deputy Secretary.

[FR Doc. 2014–07638 Filed 4–4–14; 8:45 am]

BILLING CODE 8011–01–P

[10] 15 U.S.C. 78s(b)(3)(A)(ii).

[11] 17 CFR 200.30–3(a)(12).

SECURITIES AND EXCHANGE COMMISSION

[Release No. 34–71838; File No. SR–NYSEMKT–2014–22]

Self-Regulatory Organizations; NYSE MKT LLC; Notice of Filing of Proposed Rule Change Amending Rule 98—Equities To Adopt a Principles-based Approach To Prohibit the Misuse of Material Nonpublic Information and Make Conforming Changes to Other Exchange Rules

April 1, 2014.

Pursuant to Section 19(b)(1)[1] of the Securities Exchange Act of 1934 (the ''Act'')[2] and Rule 19b–4 thereunder,[3] notice is hereby given that, on March 18, 2014, NYSE MKT LLC (the ''Exchange'' or ''NYSE MKT'') filed with the Securities and Exchange Commission (the ''Commission'') the proposed rule change as described in Items I, II, and III below, which Items have been prepared by the self-regulatory organization. The Commission is publishing this notice to solicit comments on the proposed rule change from interested persons.

I. Self-Regulatory Organization's Statement of the Terms of Substance of the Proposed Rule Change

The Exchange proposes to amend Rule 98—Equities to adopt a principles-based approach to prohibit the misuse of material nonpublic information and make conforming changes to other Exchange Rules. The text of the proposed rule change is available on the Exchange's Web site at *www.nyse.com,* at the principal office of the Exchange, and at the Commission's Public Reference Room.

II. Self-Regulatory Organization's Statement of the Purpose of, and Statutory Basis for, the Proposed Rule Change

In its filing with the Commission, the self-regulatory organization included statements concerning the purpose of, and basis for, the proposed rule change and discussed any comments it received on the proposed rule change. The text of those statements may be examined at the places specified in Item IV below. The Exchange has prepared summaries, set forth in sections A, B, and C below, of the most significant parts of such statements.

A. Self-Regulatory Organization's Statement of the Purpose of, and the Statutory Basis for, the Proposed Rule Change

1. Purpose

The Exchange proposes to amend Rule 98—Equities (''Rule 98'') to adopt a principles-based approach to prohibit the misuse of material nonpublic information by a member organization that operates a DMM unit and make conforming changes to other Exchange rules. The proposed rule changes would provide more flexibility for how a member organization may organize its DMM unit. The Exchange believes that the proposed rule change adopts an approach more similar to the rules governing equity market makers on NYSE Arca Equities, Inc. (''NYSE Arca''), the NASDAQ Stock Market LLC (''Nasdaq''), and the BATS Exchange,

[1] 15 U.S.C. 78s(b)(1).

[2] 15 U.S.C. 78a.

[3] 17 CFR 240.19b–4.

Inc. (''BATS''),[4] while maintaining certain specified protections that reflect the unique role of DMMs at the Exchange.[5] The proposed changes will provide member organizations operating DMM units with the ability to integrate DMM unit trading with other trading units, while maintaining narrowly tailored restrictions to address that DMMs while on the Trading Floor may have access to certain Floor-based non-public information. The proposed rule change will also enable DMM units to maintain procedures and controls to prevent the misuse of material, non-public information that are effective and appropriate for that member organization.

As discussed in more detail below, the Exchange proposes to redefine the structure of a DMM unit by deleting the definitions of ''aggregation unit'' and cross reference to Rule 200 of Regulation SHO (''Regulation SHO'')[6] and ''integrated proprietary aggregation unit'' and redefining the term ''DMM unit.'' The Exchange believes that these proposed revisions will enable member organizations to integrate DMM units with other trading operations within the member organization, including, if applicable, a customer-facing operation, subject to Exchange and federal rules that prohibit the misuse of material nonpublic information. In addition, in order to streamline the rule, the Exchange proposes several non-substantive clarifying and conforming changes to the provisions of Rule 98 that govern these areas. The Exchange also proposes to eliminate duplicative provisions in the rule regarding back-office operations provided by an approved person or member organization. Finally, the Exchange proposes to delete rules relating to the DMM that are obsolete.

A. Background

Rule 98, which is based on New York Stock Exchange LLC (''NYSE'') Rule 98, which was last amended in 2008,[7] incorporates various organizational structures for operating a DMM unit. Rule 98(c) provides for the operation of a ''DMM unit,'' which can be either a stand-alone member organization or an ''aggregation unit''[8] within a member organization. As a general matter, unless otherwise specified in Rule 98, a DMM unit must maintain the confidentiality of both DMM confidential information and non-public orders.[9] A DMM unit therefore must not permit either other aggregation units of the member organization or its approved person(s) to have access to DMM confidential information or non-public order information.[10]

Rule 98 defines the terms ''non-public order information'' and ''DMM confidential information'' separately. In the case of ''non-public order information,'' the Exchange seeks to protect price-sensitive non-DMM trading information that is not publicly available or that is shared with the DMM with an expectation of privacy. Thus, this definition captures any information relating to order flow at the Exchange, including verbal indications of interest made with an expectation of privacy, electronic order interest, e-quotes, reserve interest, or information about imbalances at the Exchange, that is not publicly-available on a real-time basis via an Exchange-provided datafeed, such as NYSE OpenBook®,[11] or otherwise publicly available.

''DMM confidential information'' refers to principal or proprietary trading activity of a DMM unit at the Exchange in the securities allocated to it pursuant to Rule 103B—Equities, including the unit's positions in those securities, decisions relating to trading or quoting in those securities, and any algorithm or computer system that is responsible for such trading activity and that interfaces with Exchange systems.

Rule 98(d) permits a member organization to operate the DMM business within a larger aggregation unit referred to as a ''integrated proprietary aggregation unit,'' which may only engage in proprietary trading activity, including electronic market making. Rules 98(d) and (f)(2) set forth the types of information barriers required within such a unit to separate the DMM trading at the Exchange from the trading by the unit's ''upstairs'' desk's trading in assigned securities in away markets or trading in related products.[12] In particular, the rule requires the DMM unit to protect both non-public order information and DMM confidential information. When providing risk management to the DMM unit, the integrated proprietary aggregation unit may see traded positions of the DMM unit that have been printed to the Consolidated Tape, but cannot see where the DMM unit is quoting.[13]

When a DMM unit operates within an integrated proprietary aggregation unit or engages in off-Floor trading of products related to securities assigned to the DMM unit, Rule 98 specifically prohibits an individual DMM who moves off of the Floor of the Exchange from making DMM confidential information available to off-Floor personnel or systems of the integrated proprietary aggregation unit.[14] Senior managers of the approved person or parent member organization may provide general oversight to the DMM unit, provided that if the senior manager receives any DMM confidential information or non-public order information, he or she must not use such information to directly or indirectly influence trading based on that confidential information.[15]

Rule 98 further provides that individuals or systems, including computer algorithms, that are either responsible for trading in related products within the DMM unit or engaging in risk management on behalf of the DMM unit, are restricted from having access to DMM confidential information.[16] As noted above, the limited exceptions permit the persons or systems responsible for managing the risk of the DMM unit to have electronic access to the DMM unit's trades at the Exchange in securities allocated to the

[4] *See* Securities Exchange Act Release No. 60604 (Sept. 2, 2009), 76 FR 46272 (Sept. 8, 2009) (SR–NYSEArca–2009–78) (Order approving elimination of NYSE Arca rule that required market makers to establish and maintain specifically prescribed information barriers, including discussion of NYSE Arca and Nasdaq rules). *See also* Securities Exchange Act Release No. 61574 (Feb. 23, 2010), 75 FR 9455 (Mar. 2, 2010) (SR–BATS–2010–003) (Order approving amendments to BATS Exchange, Inc. (''BATS'') Rule 5.5 to move to a principles-based approach to protecting against the misuse of material, non-public information, and noting that the proposed change is consistent with the approaches of NYSE Arca and Nasdaq).

[5] This proposed rule change is not intended to address the rules governing options market makers.

[6] 17 CFR Part 242.200.

[7] *See* Securities Exchange Act Release No. 58329 (Aug. 6, 2008), 73 FR 48260 (Aug. 18, 2008) (SR–NYSE–2008–45). The NYSE is filing to amend Rule 98. *See* SR–NYSE–2014–12.

[8] An ''aggregation unit'' is defined in Rule 98(b)(11) as any trading or market-making department, division, or desk that meets the requirements of the definition of ''independent trading unit'' pursuant to Rule 200 of Regulation SHO.

[9] *See* Rule 98(c)(2)(A).

[10] *See* Rule 98(c)(2)(A)(i) and (ii).

[11] NYSE OpenBook® provides aggregated limit-order volume that has been entered on the Exchange at price points for all NYSE MKT-traded securities.

[12] ''Related products'' are defined as any derivative instruments that are related to a security allocated to a DMM unit, including options, warrants, hybrid securities, single-stock futures, security-based swap agreement, a forward contract, or any other instrument that is exercisable into or whose price is based upon or derived from a security listed on the Exchange. *See* Rule 98(b)(15). The Exchange proposes to make non-substantive edits to this definition to conform to other changes made to Rule 98, and, as discussed below, renumber the rule accordingly.

[13] *See* Rule 98(f)(1)(v) and (98(f)(2)(A).

[14] *See* Rule 98(d)(2)(B)(iv) and 98(f)(1)(A)(iii).

[15] *See* Rule 98(c)(2)(E).

[16] *See* Rule 98(f)(1)(A)(i), 98(f)(2)(A), and 98(f)(3)(C)(2).

DMM unit, provided that such trades have been printed to the Consolidated Tape, and to electronically direct the trading of the DMM unit, subject to the DMM rules.[17]

In addition to specifying trading restrictions, Rule 98(e) provides that a DMM unit can share non-trading related services with a parent member organization or approved persons. However, to share non-trading related services, a DMM unit must obtain approval from NYSE Regulation and show that it has policies and procedures to maintain the confidentiality of DMM confidential information and non-public order information.

Because not all firms were immediately approved under ''new'' Rule 98, which was last amended in 2008, the Exchange kept the pre-2008 version of Rule 98 in its rulebook as ''Rule 98 Former—Equities'' (''Rule 98 Former''). Because Rule 98 Former was referenced in a number of other Exchange rules, certain Exchange rules have double references depending on whether the DMM is approved under Rule 98 Former or the current rule.[18]

All DMM firms are now approved to operate under Rule 98, and are no longer subject to ''Rule 98 Former.''

B. Proposed Amendments to Rule 98

The Exchange proposes to amend Rule 98 to adopt a more principles-based approach that would permit a member organization operating a DMM unit to maintain and enforce its own policies and procedures to, among other things, prohibit the misuse of material nonpublic information and eliminate requirements that specify how a member organization must organize its DMM unit within the firm. While the proposed changes would provide the ability for member organizations to integrate their DMM units, the Exchange does not believe that the amendments will reduce in any way the protections against the misuse of material nonpublic information. Rather, the Exchange believes that by adding a principles-based approach that generally prohibits the misuse of material non-public information, the amended rule will provide for broader protections than the current rule, which protects only certain defined non-public information.

To achieve the goal of enabling greater integration of DMM units within a member organization, the Exchange proposes to revise the definitions set forth in Rule 98(b) to eliminate the various structures and instead use a single term to refer to DMM operations. As proposed, the term ''DMM unit'' would be amended to mean a trading unit within a member organization that is approved pursuant to Rule 103—Equities to act as a DMM unit. Accordingly, the Exchange proposes to eliminate the requirement that a DMM unit be an ''aggregation unit'', which is currently defined to mean any trading or market-making department, division or desk that meets the requirements of the definition of ''independent trading unit'' pursuant to Rule 200 of Regulation SHO.[19]

The Exchange proposes to decouple the Rule 98 definition from Regulation SHO in part because the two rules seek to achieve different purposes. Rule 200(f) of Regulation SHO sets forth the requirements for qualifying as an ''independent trading unit'' for the purpose of order marking requirements under Rule 200. In practice, broker dealers use information barriers to meet the requirements of an independent trading unit under Regulation SHO. By contrast, Rule 98 does not concern the netting of position information. While member organizations operating DMM units would be required to comply with Regulation SHO, the Exchange does not believe that it needs to prescribe in its rules how a firm must structure its DMM operations for purposes of complying with Regulation SHO.

For similar reasons, the Exchange does not believe it needs to maintain a definition unique to the Exchange and DMMs of an ''integrated proprietary aggregation unit.'' This definition contemplates a DMM unit being part of an aggregation unit that engages in only proprietary trading activity. While a member organization may choose to structure in this manner, the Exchange does not believe it needs to be required. Rather, the Exchange believes that Rule 98 should provide flexibility for a member organization to structure its business, including any DMM operations, in a manner that a member organization believes is appropriate for its business purposes, subject to requirements to protect against the misuse of material, non-public information, as discussed below.

The Exchange proposes additional changes to Rule 98(b) to delete definitions that are no longer necessary in the revised rule. Specifically, the Exchange proposes to delete the definitions for ''DMM API,'' ''DMM account,'' ''customer-facing department,'' and ''non-trading related services.'' The terms DMM API and DMM account were based on Rule 104 before it was amended in 2008. Accordingly, the Exchange believes that these definitions are now obsolete. In addition, because the proposed rule changes are intended to provide principles-based instruction on how to operate a DMM unit, the rule no longer needs to define terms that support the current, more prescriptive rule text. The Exchange proposes to delete the definitions of ''DMM'' and ''approved person'' as duplicative of the definitions set forth in Rules 2(i)—Equities and 2(c)—Equities. The Exchange proposes to make non-substantive edits to the definition of ''related products.'' The Exchange also proposes to make conforming amendments to Rule 2(j)—Equities.

With these proposed definition changes, the Exchange believes that a member organization operating a DMM unit would be better positioned to integrate its DMM operations. For example, if a member organization engages in market-making operations on multiple exchanges, it may be optimal for a firm to house its DMM operations together with the other market-making operations, even if such operations are customer-facing. Another variation could be if a firm chooses to include all of its equity trading, including customer-facing operations, within a single independent trading unit. The Exchange believes that providing member organizations with the ability to integrate DMM operations could promote liquidity at the Exchange because the DMM operations would be part of a larger unit with greater sources of liquidity.[20]

The Exchange notes that notwithstanding how a member organization chooses to structure its operations, that firm would need to meet the requirements of Section 15(g) of the Act,[21] which requires every

[17] *See* Rule 98(f)(1)(A)(v), 98(f)(2)(a)(i), and 98(f)(3)(c)(iii) and (iv).

[18] *See* Rules 104T(a)(Former)—Equities, 105(a) Former—Equities, 105(b) Former—Equities, 105(d) Former—Equities, 105 Guidelines section (m) Former—Equities, and 113 Former—Equities.

[19] The Exchange proposes to delete rule provisions that reference the terms ''aggregation unit'' and ''integrated proprietary aggregation unit.'' *See, e.g.,* Rule 98(c)(2)(B).

[20] The Exchange notes that under Regulation SHO, determination of a seller's net position is based on the seller's position in the security in all proprietary accounts. *See* Securities Exchange Act Release No. 50103 (July 28, 2004), 69 FR 48008, 48010, n.22 (Aug. 6, 2004); *see also* Securities Exchange Act Release Not 48709 (Oct. 29, 2003), 68 FR 62972, 62991 and 62994 (Nov. 6, 2003); Letter from Richard R. Lindsey, Director, Division of Market Regulation, to Roger D. Blanc, Wilkie Farr & Gallagher, SEC No-Action Letter, 1998 SEC No-Act. LEXIS 1038, p. 5 (Nov. 23, 1998); Securities Exchange Act Release No. 30772 (June 3, 1992), 57 FR 24415, 24419 n.47 (June 9, 1992); Securities Exchange Act Release No. 27938 (Apr. 23, 1990), 55 FR 17949, 17950 (Apr. 30, 1990).

[21] 15 U.S.C. 78o(g).

registered broker or dealer to ''establish, maintain, and enforce written policies and procedures reasonably designed, taking into consideration the nature of such broker's or dealer's business, to prevent the misuse . . . of material, nonpublic information by such broker or dealer or any person associated with such broker or dealer.''

Accordingly, the Exchange proposes to revise current Rule 98(c)(2) and replace it with new text based on NYSE Arca Equities Rule 6.3 (Prevention of the Misuse of Material Nonpublic Information) and BATS Rule 5.5 (Prevention of the Misuse of Material, Non-Public Information) that specifies that a member organization seeking approval to operate a DMM unit pursuant to Rule 98 must maintain and enforce written policies and procedures reasonably designed, taking into consideration the nature of such member organization's business, (i) to prevent the misuse of material, non-public information by such member organizations or persons associated with such member organization and (ii) to ensure compliance with applicable federal laws and regulations and with Exchange rules.[22]

Similar to NYSE Arca Equities Rule 6.3, the Exchange further proposes to add rule text that provides examples of conduct that would constitute the misuse of material, non-public information, including, but not limited to: (A) Trading in any securities issued by a corporation, or in any related products, while in possession of material-non-public information concerning the issuer; (B) trading in a security or related product, while in possession of material non-public information concerning imminent transactions in the security or related product; or (C) disclosing to another person or entity any material, non-public information involving a corporation whose shares are publicly traded or an imminent transaction in an underlying security or related product for the purpose of facilitating the possible misuse of such material, non-public information.[23]

The Exchange believes that with the proposed change to Rule 98(c)(2), member organizations will be able to utilize a flexible, principles-based approach to modify their policies and procedures as appropriate to reflect changes to their business model, business activities, or to the securities market itself. Moreover, while specified information barriers may no longer be required, a member organization's business model or business activities may dictate that an information barrier or functional separation be part of the appropriate set of policies and procedures that would be reasonably designed to achieve compliance with applicable securities laws and regulations, and with applicable Exchange rules.

More specifically, the Exchange notes that providing member organizations with the ability to integrate DMM unit operations with other equity trading operations, which may include customer-facing trading desks, would enable member organizations to better manage risk and adopt uniform trading models across multiple markets. Currently, because DMM units need to be walled off from other market-making desks, the DMM units cannot leverage quoting models that may have been developed for the other market-making desks. And because of the Rule 98-mandated separation, member organizations are restricted in their ability to manage risk across the DMM unit and other market-making units. As a result, the costs associated with developing separate quoting models and risk strategies for a stand-alone DMM unit become prohibitive as compared to a member organization's investment in operating an integrated market-making unit that may include both internalized customer flow and registered market-making on other exchanges. The Exchange believes that if DMM units could be integrated with other market-making units, it could not only enable member organizations to enhance their overall risk management, but could also potentially lead to flow that would otherwise be internalized being directed instead to the Exchange.

Consistent with the proposal to adopt a principles-based approach to protect against the misuse of material non-public information generally, the Exchange proposes to restructure the defined terms in current Rule 98 that relate to non-public information. First, the Exchange proposes to re-define the definition of ''non-public information'' as ''Floor-based non-public information.'' The Exchange proposes this redefinition to distinguish this type of non-public information, which is non-DMM information to which a DMM while on the Trading Floor may have access due to the unique role of DMMs on the Trading Floor, from any other non-public information that is covered by proposed Rule 98(c)(2). As discussed in more detail below, the Exchange proposes to maintain restrictions in proposed Rule 98(c)(3) tailored to the Floor-based activities of DMM units and proposes to use the term ''Floor-based non-public order information'' to distinguish which information those provisions are intended to protect.[24]

Second, the Exchange proposes to delete the definition of DMM confidential information as duplicative of proposed new Rule 98(c)(2), which protects against the misuse of material non-public information. As noted above, the term ''DMM confidential information'' includes position, trading, and quoting information of the DMM unit. This information is non-public to persons or entities that are not part of the member organization, but critical information for a member organization to operate and manage its own risks. The Exchange believes that the policy concerns relating to specifying separate protections for this information are no longer applicable. Specifically, unlike specialists, DMMs are not agents for orders on the Exchange's book and do not have any negative obligations. Instead, DMMs are required to act as market makers in assigned securities, subject to affirmative obligations to maintain a fair and orderly market.[25] While the DMM continues to have the ability to, and does, trade manually from the Floor, the vast majority of the DMM's quotes are entered by means of algorithms initiated off-Floor. Moreover, DMM interest manually entered intraday during a slow state or to participate in a verbal transaction with a Floor broker still yields to public orders.[26] In addition, to the extent a DMM on the Floor may have access to Floor-based non-public order information, proposed Rule 98(c)(3) would continue to specify protections against the misuse of that information by the member organization.

The Exchange believes that the proposed principles-based approach to protect against the misuse of material non-public order information specified in proposed Rule 98(c)(2) would ensure that a member organization would be required to protect against the misuse of

[22] The Exchange also proposes to revise Rule 98(c)(1) to replace the term ''NYSE Regulation, Inc.'' with the term ''Exchange.'' Pursuant to Rule 0(c), the term ''Exchange'' may also mean FINRA staff working on behalf of the Exchange and NYSE Regulation, Inc. pursuant to a regulatory services agreement.

[23] Because Rule 98 defines the term ''related product,'' the Exchange proposes to use the term ''related product'' instead of ''related security,'' which is the term used in NYSE Arca Equities Rule 6.3.

[24] The Exchange proposes non-substantive changes to this definition that better reflect how Exchange systems currently operate. Specifically, the Exchange believes that concept of trading in ''slow mode'' is duplicative of the remaining rule text, which covers any order information that is made available to DMMs but that is not available to other market participants.

[25] *See* Rule 104—Equities.

[26] *See* Rule 72(c)(xi)—Equities.

any material non-public information that currently falls within the definition of DMM confidential information. As noted above, this includes refraining from trading while in possession of material non-public information concerning imminent transactions in the security or related product. The Exchange believes that moving to a principles-based approach rather than prescribing how and when to protect the DMM's own quoting and trading information would provide member organizations operating DMM units with appropriate tools to better manage risk across a firm, including integrating DMM unit positions and quoting information with other quotes and positions by the firm, or as applicable, by the respective independent trading unit. Specifically, the Exchange believes that it is appropriate for risk management purposes for a member organization operating a DMM unit to be able to consider both DMM unit outstanding quotes as well as traded positions for purposes of calculating net positions consistent with Rule 200 of Regulation SHO, calculating intra-day net capital positions, and managing risk both generally as well as in compliance with Rule 15c3–5 under the Act (the ''Market Access Rule'').[27] The Exchange notes that any risk management operations would need to operate consistent with the requirement to protect against the misuse of material non-public information.

The Exchange notes that if DMM units are integrated with other market-making operations, they would be subject to existing rules that prohibit member organizations from disadvantaging their customers or other market participants by improperly capitalizing on a member organization's access to the receipt of material, non-public information. As such, a member organization that integrates its DMM unit operations together with customer-facing operations would need to protect customer information consistent with existing obligations to protect customer information that already apply to equity market makers registered on other exchanges. For example, Rule 5320—Equities (''Rule 5320''), which is substantially similar to FINRA Rule 5320, NYSE Rule 5320 and NYSE Arca Equities Rule 5320 (generally referred to as the ''Manning Rule.''), generally prohibits a member organization from trading for its own account ahead of customer orders. Rule 5320(a) further provides that if a member organization trades at a price for its own account ahead of the customer order, it must execute the customer order up to the size and at the same or better price at which it traded for its own account. The Manning Rule sets forth certain exceptions to this requirement, including the Large Orders and Institutional Account Exceptions (Supplementary Material .01 to Rule 5320) and the No-Knowledge Exception (Supplementary Material .02 to Rule 5320). A member organization operating both a DMM unit, which engages in trading for its own account, and customer-facing operations would need to comply with the Manning Rule or meet one of the specified exceptions.[28] In addition, a member organization operating a DMM unit would also need to maintain policies and procedures to assure that it does not engage in any frontrunning of customer order information in violation of Exchange, FINRA, or federal rules. The Exchange notes that these are existing obligations that already govern equity market-making operations on other exchanges and therefore integrating DMM operations with such desks would not present any novel issues.

Proposed Rule 98(c)(3)–(7) would set forth the remaining specific restrictions for member organizations operating a DMM unit. In recognition of the unique role of DMMs, including limited Floor-based access to certain non-public order information,[29] the Exchange proposes to maintain certain prescriptions on how a DMM unit must operate. To effect this new structure, the Exchange proposes to delete subsections (d) and (f) of Rule 98 and move the sections of those rules that the Exchange proposes to retain to an amended subsection (c)(3)—(7) of the Rule, which include the relevant restrictions on trading within the unit. As proposed, the rule will no longer prescribe the type of trading in which a DMM unit may engage. Rather, the proposed rule will only specify the types of trading activities that would be restricted.

Proposed Rules 98(c)(3)(A)–(D) would set forth the restrictions specific to DMM units that address their unique role at the Exchange. Proposed Rule 98(c)(3)(A) would provide generally that a member organization shall protect against the misuse of Floor-based non-public order information. The rule would further specify who may have access to such Floor-based non-public order information (as permitted pursuant to Rule 104—Equities), which, as proposed, would be the Floor-based employees of the DMM unit and individuals responsible for the direct supervision of the DMM unit's Floor-based operations. The Exchange believes that the proposed rule change specifies in a more straight-forward manner who may have access to have non-public order information, and replaces the multiple references in the current Rule 98 to the same concept.[30]

Proposed Rule 98(c)(3)(B) would specify the restrictions applicable to employees of the DMM unit while on the Trading Floor. First, while on the Trading Floor of the Exchange, employees of the DMM unit, except as provided for in Rule 36.30—Equities, may trade only DMM securities and only on or through the systems and facilities of the Exchange, as permitted by Exchange Rules.[31] Second, while on the Trading Floor, Floor-based employees may not communicate with individuals or systems responsible for making trading decisions for related products or for away-market trading in DMM securities.[32] Finally, because a DMM unit may be part of a larger trading unit that includes customer-facing operations, the Exchange proposes to add a new restriction that while on the Trading Floor, employees of the DMM unit shall not have access to customer information or the DMM unit's position in related products.[33] The Exchange believes that these proposed restrictions will ensure that while on the Floor, employees of a DMM unit will not be quoting or trading based on material non-public information related to customer information or trading in related products.

As with the current rule, the Exchange proposes to maintain restrictions on what happens if a non-Floor based individual becomes aware of Floor-based non-public order

[27] 17 CFR Part 240.15c3–5.

[28] The Exchange notes that FINRA already monitors member organizations for compliance with Rule 5320.

[29] *See* Rule 104(j)(ii)—Equities.

[30] *See, e.g.,* Rules 98(c)(2)(A)(i)–(ii), (d)(2)(B)(i)–(iii), (f)(1)(A)(i), (f)(3)(C)(ii). The current rule is structured as to who may not have access. The Exchange believes it is clearer to specify who may have access to such information.

[31] *Compare* proposed Rule 98(c)(3)(A) *with* Rule 98(f)(1)(A)(ii). The Exchange also proposes to replace the term ''Floor'' with the term ''Trading Floor'' to reflect the use of that term in Rules 6A—Equities and 36—Equities.

[32] *Compare* proposed Rule 98(c)(3)(B) *with* Rule 98(d)(2)(B)(iii).

[33] *Compare* proposed Rule 98(c)(3)(B)(iii) *with* Rule 98(f)(1)(A)(ii). In addition, the Exchange believes that proposed Rule 98(c)(3)(B)(iii) replaces the concerns expressed in current Rule 98(c)(2)(C) that the DMM unit not have access to material non-public information that is in possession of other aggregation unit. The Exchange does not believe it needs to maintain Rule 98(c)(2)(C) because it restates the general concept of how aggregation units under Regulation SHO are structured, and as noted above, Rule 98 no longer follows the aggregation unit model.

information. The Exchange proposes to consolidate the current rule concerning wall-crossing provisions into proposed Rule 98(c)(3)(C), which would provide that when a Floor-based employee of a DMM unit moves to a location off of the Trading Floor of the Exchange or if any person that provides risk management oversight or supervision of the Floor-based operations of the DMM unit is aware of Floor-based non-public order information, he or she shall not (1) make such information available to customers, (2) make such information available to individuals or systems responsible for making trading decisions in DMM securities in away markets or related products, or (2) use any such information in connection with making trading decisions in DMM securities in away markets or related products.

The Exchange believes that consolidating the wall-crossing provisions into a single provision achieves the same purpose as the current rule, which states the same concept in multiple places.[34] The proposed rule is augmented by adding that Floor-based non-public order information cannot be made available to customers. The proposed rule would cover any individual, whether it is an individual that leaves the Floor or a manager providing oversight of Floor operations, to neither use nor make available any non-public order information that the individual becomes aware of. The Exchange believes that replacing the concept of ''access to'' information with ''aware of'' information provides a clearer standard for member organizations and is generally more consistent with federal rules.[35] Specifically, because the provision is intended to ensure that information is not used inappropriately, inappropriate use of such information could only occur if someone is aware of that information.

For example, a DMM unit could be part of a larger trading unit that engages in customer-facing market making activities on multiple exchanges. With the proposed changes to Rule 98 generally, a manager within that unit would be able to monitor risk across the unit, including positions from trading as a DMM at the Exchange, without breaching any prohibitions against the misuse of material nonpublic information. Assume that a Floor-based DMM needs to take on a larger risk profile in a security because of a proposed Floor broker transaction and needs to discuss this proposed transaction with the off-Floor manager. Once this topic is discussed with the off-Floor manager, that manager is now aware of Floor-based non-public order information, and therefore must protect against the misuse of this information. This type of wall-crossing procedure is consistent with current practices within member organizations.

As with the current rule, but with new rule numbering, the Exchange proposes to maintain that the DMM unit may make available to a Floor broker associated with or affiliated with an approved person or member organization any information that the DMM would be permitted to provide under Exchange rules to an unaffiliated Floor broker.[36]

To ensure that all trading activity by a DMM unit in DMM securities at the Exchange is available for review, the Exchange proposes to add a provision that any interest entered by the DMM unit in DMM securities at the Exchange must be entered through systems that identify such interest as DMM interest.[37] As proposed, because the Exchange's trading systems continue to evolve, the Exchange believes it is unnecessary to specify which system(s) a DMM unit must use. However, this rule would require the DMM unit to use a system that would enable such interest to be identified as DMM trading interest.

The Exchange notes that the Rule 104 obligations that relate to whether a DMM is long or short, *i.e.,* Rules 104(g)(i)(A)(III) and (h)—Equities, are applicable to the DMM unit's position in DMM securities together with any position of a Regulation SHO independent trading unit of which the DMM unit may be included. For example, if a DMM unit is combined with market-making desks that are trading on away markets, it would be the position of that entire unit in DMM securities, and not just the DMM's Exchange-traded positions, that would be relevant for those rules. To ensure that the Exchange can monitor for compliance with these rules, the Exchange proposes to add to Rule 98 that the member organization must provide the Exchange with real-time unit position information for any trading in DMM securities by the DMM unit and any independent trading unit of which it is a part.[38] For example, if a DMM unit is part of an independent trading unit that engages in trading on other markets in DMM securities, the real-time position update would need to incorporate any away-market transactions in DMM securities by that independent trading unit.

Currently, Rule 98 permits an integrated proprietary aggregation unit to engage in options market making (electronic only), provided that the DMM unit is walled off from the options market making trading desk. Similar to NYSE Arca Equities, the Exchange proposes to eliminate prescriptive rules regarding how to structure DMM operations together with other market-making operations, and instead believes that the principles-based approach set forth in proposed Rule 98(c)(2) should protect against the misuse of material nonpublic information.[39] The Exchange proposes to amend Rule 98 to specify restrictions that are unique to the Exchange by virtue of the close physical proximity of the NYSE Amex Options LLC (''NYSE Amex Options'') trading floor. As proposed, the DMM unit may not operate as a specialist or market maker on the Exchange or the NYSE Amex Options trading floors in related products, unless specifically permitted in Exchange rules.[40] The Exchange notes that a member organization that operates a DMM unit may be a specialist or market maker on NYSE Amex Options trading floor provided that it maintains appropriate information barriers.

The Exchange also proposes to maintain the existing requirement that the member organization maintain information barriers between the DMM unit and any investment banking or research departments.[41] The amended rule would also continue to provide that no DMM or DMM unit may be directly supervised or controlled by an individual associated with an approved person or the member organization who is assigned to any investment banking or research departments.[42] The only

[34] *See* Rules 98(c)(2)(E)(i), 98(d)(2)(B)(iv), and (f)(1)(A)(3).

[35] *See* 17 CFR 240.10b5–1(b) (specifying that a purchase or sale of securities constitutes trading on the basis of material nonpublic information when the person making the purchase or sale was aware of the material nonpublic information when the person made the purchase or sale).

[36] *Compare* proposed Rule 98(c)(3)(D) *with* Rule 98(c)(2)(A)(ii). The Exchange proposes to replace the term ''DMM'' with ''DMM unit'' to be clear that the proposed rule covers any staff of the DMM unit located on the Trading Floor.

[37] *See* proposed Rule 98(c)(4).

[38] *See* proposed Rule 98(c)(5). The Exchange proposes to delete Rule 98(d)(4) and subparagraphs from the rule both because the Exchange does not believe it needs to separately identify DMM audit trail requirements and because Rule 132B—Equities no longer exists.

[39] *See* footnote 4.

[40] *See* proposed Rule 98(c)(6). The Exchange notes that currently, the only time that a DMM unit may engage in market making in a related products is pursuant to Rule 504(b)(5)—Equities.

[41] *Compare* proposed Rule 98(c)(7) *with* 98(c)(2)(A)(i) and (c)(2)((C). Investment banking activities include activities such as underwriting, tender offers, mergers, acquisitions, recapitalizations, etc. *See* Rule 98(f)(1).

[42] *Compare* proposed Rule 98(c)(7) *with* Rule 98(c)(2)(E)(ii).

difference between the proposed rule text and the current rule is that the Exchange proposes to delete that a DMM unit may not be supervised or controlled by an individual assigned to a customer-facing department. As noted above, the Exchange believes that member organizations should not be restricted in their ability to combine DMM operations with customer-facing operations, subject to the restrictions enumerated in amended Rule 98 and the proposed Exchange and federal requirements that prohibit the misuse of material nonpublic information, discussed above.

The Exchange also proposes to provide in proposed Rule 98(d) that the DMM rules will apply only to the DMM unit's quoting or trading in their DMM securities for their own accounts at the Exchange.[43] The Exchange has added that this restriction is only applicable to DMM unit trading for their own account to be clear that the DMM rule restrictions are not applicable to any customer orders routed to the Exchange by that member organization as agent.

The Exchange believes that by restructuring the rule to focus on protecting against the misuse of material non-public information, Rule 98 no longer needs to specify how a member organization or an approved person provides back-office support operations, such as clearing, stock loan, and compliance, for the DMM unit. Rather, the Exchange believes that how a member organization or approved person provides back-office operations to the DMM unit should not differ from how such services are provided to other trading units within that member organization or approved person. In addition, as proposed, amended Rule 98(c)(2) would require the member organization to protect against the misuse of material non-public information, which would govern all aspects of a member organization's operations. Accordingly, the Exchange proposes to delete in its entirety Rule 98(e).

The Exchange notes that if a person in the member organization or an approved person is providing non-trading related services to the DMM unit, and as a result of such relationship, becomes aware of Floor-based non-public order information, such person would be subject to the wall-crossing provisions of proposed Rule 98(c)(3)(C), which is applicable to any person who is aware of such information. Because these protections for Floor-based non-public order information are retained in the proposed revisions to Rule 98, and are applicable to approved persons pursuant to proposed amended Rule 98(a)(1), the Exchange believes that Rule 98(e), which concerns the sharing of non-trading related services, is redundant of existing regulatory requirements governing the operations of a broker-dealer. The Exchange proposes conforming amendments to Rule 36.30—Equities.

Because of the proposed restructuring of the rule, Rule 98(g) will be renumbered as Rule 98(e), Rule 98(h) will be renumbered as Rule 98(f), and Rule 98(i) will be renumbered as Rule 98(g). The Exchange is proposing conforming changes to these sections, including updating cross-references and changing the reference from the Division of Market Surveillance and NYSE Regulation to the Exchange.[44]

C. Other Proposed Amendments

As noted above, all DMM firms for which Rule 98 is applicable are now under the auspices of Rule 98. Accordingly, Rule 98 Former no longer has any application for any DMM units. The Exchange therefore proposes to delete Rule 98 Former and any rule that either references Rule 98 Former, *i.e.,* Rule 104T(a)(Former) and supplementary material .13 (Former), or references a rule that is being proposed for deletion, *e.g.,* Rule 900. The Exchange also proposes to amend Rule 98(a) and 105 to delete references to Rule 98 Former.

In addition, the Exchange proposes to amend Rule 105—Equities (''Rule 105'') to delete Rule 105(b)–(d) and the Guidelines for DMM's Registered Security Option and Single Stock Futures Transactions Pursuant to Rule 105 (''Rule 105 Guidelines'') and make conforming amendments to Rule 36.30—Equities.[45] Rule 105 currently sets forth hedging guidelines to permit the DMM to trade listed options or single-stock futures that overlay DMM securities from the Trading Floor. Under Rule 98(f)(1), a DMM unit can obtain an exemption from the Rule 105 Guidelines to trade options or futures, provided that such trading is conducted by a walled-off, off-Floor trading desk.

Under proposed revisions to Rule 98, a DMM unit would no longer need to apply for an exemption from Rule 105 trading restrictions because, as discussed above, while on the Trading Floor, Floor-based employees may trade only DMM securities, *i.e.,* no related products, and only on or through the systems and facilities of the Exchange. Because there would not be any Floor-based trading in listed options or single-stock futures, the Rule 105 Guidelines specifying how such Floor-based trading may occur are now moot. Accordingly, the Exchange proposes to delete these rules.

In addition, because DMM units no longer have customer relationships, the Exchange proposes to delete in its entirety the DMM Booth Wire Policy, which is set forth in Rule 123B—Equities, as obsolete.

The Exchange notes that all member organizations currently operating DMM units already have in place written policies and procedures to comply with Rule 98, and such policies and procedures have been approved by NYSE Regulation.[46] In addition, FINRA has an exam program that reviews member organizations operating DMM units for compliance with such procedures. Because the proposed Rule 98 amendments would continue to require Exchange approval of any policies and procedures to protect against the misuse of material nonpublic information, if a member organization chooses to modify how it operates its DMM operations consistent with amended Rule 98, such revised policies and procedures would be subject to Exchange review before they could be implemented. In addition, once implemented, FINRA would continue to monitor a member organization's compliance with those policies and procedures consistent with the current exam-based regulatory program associated with Rule 98.

In addition, FINRA already has in place surveillances designed to monitor for manipulative activity and the Exchange believes that because DMM market-making activity is not materially different from market-making on other exchanges, these existing programs are reasonably designed to address any concerns that may be raised by a DMM unit being integrated with existing market-making operations.

2. Statutory Basis

The basis under the Act for this proposed rule change is the requirement

[43] *Compare* proposed Rule 98(d) *with* Rules 98(c)(3) and (d)(3). As defined in proposed Rule 98(b)(3) (formerly, Rule 98(b)(5)), the DMM rules mean any rules that govern DMM conduct or trading. These would include, for example, Rules 36.30—Equities, 103—Equities, 103A—Equities, 103B—Equities, and 104—Equities.

[44] Pursuant to Rule 0(c), the reference to the Exchange in this rule may also mean FINRA.

[45] The Exchange proposes to amend Rule 105(a) to clarify that the restriction on pool dealing applies to the DMM unit for securities registered to that unit and revise the title of the rule accordingly.

[46] FINRA currently approves Rule 98 procedures on behalf of NYSE Regulation, Inc. pursuant to a regulatory services agreement. *See supra* footnote 22.

under Section 6(b)(5)[47] that an Exchange have rules that are designed to promote the just and equitable principles of trade, to remove impediments to and perfect the mechanism of a free and open market and a national market system and, in general, to protect investors and the public interest. The Exchange believes that the proposed rule change would remove impediments to and perfect the mechanism of a free and open market by adopting a principles-based approach to permit a member organization operating a DMM unit to maintain and enforce policies and procedures to, among other things, prohibit the misuse of material non-public information and eliminating restrictions on how a member organization structures its DMM unit operations. The proposed amendments maintain the existing Rule 98 restrictions that are specific to the unique role of the DMM and also maintain the information barrier requirements between the DMM unit and any investment banking or research departments. Member organizations operating DMM units will continue to be subject to federal and Exchange requirements for protecting material non-public order information[48] and protecting customer orders that are the consistent with the existing rules governing broker dealers that operate as equity market makers on other registered exchanges.[49]

Accordingly, while certain prescriptive elements of Rule 98 are being deleted, the Exchange notes that the rule will still require that member organizations maintain and enforce policies and procedures reasonably designed to ensure compliance with applicable federal securities laws and regulations and with Exchange rules. The Exchange notes that such written policies and procedures will continue to be subject to oversight by the Exchange and therefore the elimination of prescribed restrictions should not reduce the effectiveness of the Exchange rules to protect against the misuse of material non-public information. Rather, member organizations will be able to utilize a flexible, principles-based approach to modify their policies and procedures as appropriate to reflect changes to their business model, business activities, or to the securities market itself. Moreover, while specified information barriers may no longer be required, a member organization's business model or business activities may dictate that an information barrier or functional separation be part of the appropriate set of policies and procedures that would be reasonably designed to achieve compliance with applicable securities laws and regulations, and with applicable Exchange rules. The Exchange therefore believes that the proposed rule change will maintain the existing protection of investors and the public interest that is currently set forth in Rule 98, while at the same time removing impediments to and perfecting a free and open market by moving to a principles-based approach to protect against the misuse of material non-public information.

The Exchange similarly believes that deleting the definition of ''DMM confidential information'' removes impediments to and perfects the mechanism of a free and open market as it will enable a member organization to share quoting and position information as may be necessary to meet order marking requirements under Regulation SHO or to comply with the Market Access Rule. The Exchange further believes that the proposed adoption of a principles-based approach to protect against the misuse of material non-public information, including specifically requiring refraining from trading based on material non-public information regarding imminent transactions in a security or related product, will protect investors and the public interest because it will assure the protection against the misuse of material non-public information and delete prescribed rules that may no longer meet this goal.

The Exchange also believes that amending Rule 98 to apply wall-crossing procedures to any individual who is aware of non-public order information both broadens the protection of the rule to any individual, while at the same time narrowly tailors the rule to when such protections should apply, *i.e.,* when an individual is aware of non-public order information and therefore could be in a position to make a purchase or sale of securities on the basis of such material nonpublic information. The Exchange believes that such clarifying changes remove impediments to and perfect the mechanism of a free and open market by assuring that the protections are applied when necessary.

In addition, the Exchange believes that deleting Rule 98 Former and all references thereto in Exchange rules removes impediments to and perfects the mechanism of a free and open market because Rule 98 Former no longer governs any member organizations or approved persons that operate a DMM unit, nor would it be applicable to any new DMM units, and therefore deleting the rule reduces any potential confusion of which version of Rule 98 is applicable. For similar reasons, because DMMs would not be permitted to trade in related products while on the Trading Floor, the Exchange believes that the Rule 105 Guidelines are now moot, and deleting such rule reduces any potential confusion of which rules govern DMM unit trading in related products. Finally, the Exchange believes that deleting the Booth Wire Policy reduces confusion as such policy is now moot given that DMMs do not have public customers.

B. Self-Regulatory Organization's Statement on Burden on Competition

The Exchange does not believe that the proposed rule change will impose any burden on competition that is not necessary or appropriate in furtherance of the purposes of the Act. The Exchange operates the only-Floor-based equities market with DMMs. As such, any changes to Rule 98 would not impact any other markets. However, the Exchange believes Rule 98 currently imposes a burden on competition for the Exchange because it requires member organizations that operate a DMM unit to operate in a manner that the Exchange believes is more restrictive than necessary for the protection of investors or the public interest. The Exchange believes that the proposed rule change is pro-competitive because it adopts a principles-based approach that prohibit the misuse of material non-public information that is consistent with the rules of NYSE Arca, BATS, and Nasdaq governing equity market makers and should provide greater flexibility for how a member organization could structure its operations.

C. Self-Regulatory Organization's Statement on Comments on the Proposed Rule Change Received From Members, Participants, or Others

No written comments were solicited or received with respect to the proposed rule change.

III. Date of Effectiveness of the Proposed Rule Change and Timing for Commission Action

Within 45 days of the date of publication of this notice in the **Federal Register** or within such longer period (i) as the Commission may designate up to 90 days of such date if it finds such longer period to be appropriate and publishes its reasons for so finding or (ii) as to which the self-regulatory organization consents, the Commission will:

[47] 15 U.S.C. 78f(b)(5).

[48] *See* 15 U.S.C. 78o(g) and proposed Rule 98(c)(2).

[49] *See* Rule 5320.

(A) By order approve or disapprove the proposed rule change, or

(B) institute proceedings to determine whether the proposed rule change should be disapproved.

IV. Solicitation of Comments

Interested persons are invited to submit written data, views, and arguments concerning the foregoing, including whether the proposed rule change is consistent with the Act. Comments may be submitted by any of the following methods:

Electronic Comments

- Use the Commission's Internet comment form (*http://www.sec.gov/rules/sro.shtml*); or
- Send an email to *rule-comments@sec.gov.* Please include File Number SR–NYSEMKT–2014–22 on the subject line.

Paper Comments

- Send paper comments in triplicate to Secretary, Securities and Exchange Commission, 100 F Street NE., Washington, DC 20549–1090.

All submissions should refer to File Number SR–NYSEMKT–2014–22. This file number should be included on the subject line if email is used. To help the Commission process and review your comments more efficiently, please use only one method. The Commission will post all comments on the Commission's Internet Web site (*http://www.sec.gov/rules/sro.shtml*). Copies of the submission, all subsequent amendments, all written statements with respect to the proposed rule change that are filed with the Commission, and all written communications relating to the proposed rule change between the Commission and any person, other than those that may be withheld from the public in accordance with the provisions of 5 U.S.C. 552, will be available for inspection and copying in the Commission's Public Reference Section, 100 F Street NE., Washington, DC 20549–1090. Copies of the filing will also be available for inspection and copying at the NYSE's principal office and on its Internet Web site at *www.nyse.com.* All comments received will be posted without change; the Commission does not edit personal identifying information from submissions. You should submit only information that you wish to make available publicly. All submissions should refer to File Number SR–NYSEMKT–2014–22 and should be submitted on or before April 28, 2014.

For the Commission, by the Division of Trading and Markets, pursuant to delegated authority.[50]

Kevin M. O'Neill,

Deputy Secretary.

[FR Doc. 2014–07635 Filed 4–4–14; 8:45 am]

BILLING CODE 8011–01–P

[50] 17 CFR 200.30–3(a)(12).

SECURITIES AND EXCHANGE COMMISSION

[Release No. 34–71836; File No. SR–CBOE–2014–027]

Self-Regulatory Organizations; Chicago Board Options Exchange, Incorporated; Notice of Filing and Immediate Effectiveness of a Proposed Rule Change To Renew an Existing Pilot Program

April 1, 2014.

Pursuant to Section 19(b)(1) of the Securities Exchange Act of 1934 (the ''Act''),[1] and Rule 19b–4 thereunder,[2] notice is hereby given that on March 25, 2014, Chicago Board Options Exchange, Incorporated (the ''Exchange'' or ''CBOE'') filed with the Securities and Exchange Commission (the ''Commission'') the proposed rule change as described in Items I and II below, which Items have been prepared by the Exchange. The Commission is publishing this notice to solicit comments on the proposed rule change from interested persons.

I. Self-Regulatory Organization's Statement of the Terms of Substance of the Proposed Rule Change

The Exchange proposes to renew an existing pilot program until November 3, 2014. Under the existing pilot program, the Exchange is permitted to list P.M.-settled options on broad-based indexes that expire on: (a) Any Friday of the month, other than the third Friday-of-the-month (''End of Week Expirations'' or ''EOWs''), and (b) the last trading day of the month (''End of Month Expirations'' or ''EOMs''). The text of the proposed rule change is provided below. (additions are italicized; deletions are [bracketed])

* * * * *

Chicago Board Options Exchange, Incorporated

Rules

* * * * *

Rule 24.9. Terms of Index Option Contracts

(a)–(d) No change.

(e) End of Week/End of Month Expirations Pilot Program (''EOW/EOM Pilot Program'')

(1) End of Week (''EOW'') Expirations. The Exchange may open for trading EOWs on any broad-based index eligible for regular options trading to expire on any Friday of the month, other than the third Friday-of-the-month. EOWs shall be subject to all provisions of this Rule and treated the same as options on the same underlying index that expire on either the Saturday following the third Friday of the month, for series expiring prior to February 1, 2015, or on the third Friday of the expiration month, for series expiring on or after February 1, 2015; provided, however, that EOWs shall be P.M.-settled.

(2) End of Month (''EOM'') Expirations. The Exchange may open for trading EOMs on any broad-based index eligible for regular options trading to expire on last trading day of the month. EOMs shall be subject to all provisions of this Rule and treated the same as options on the same underlying index that expire on either the Saturday following the third Friday of the month, for series expiring prior to February 1, 2015, or on the third Friday of the expiration month, for series expiring on or after February 1, 2015; provided, however, that EOMs shall be P.M.-settled.

(3) Duration of EOW/EOM Pilot Program. The EOW/EOM Pilot Program shall be through [April 14, 2014] *November 3, 2014.*

(4) EOW/EOM Trading Hours on the Last Trading Day. On the last trading day, transactions in expiring EOWs and EOMs may be effected on the Exchange between the hours of 8:30 a.m. (Chicago time) and 3:00 p.m. (Chicago time). This subsection (4) applies to all outstanding expiring EOW and EOM Expirations listed on or before May 6, 2011 and all EOWs and EOMs listed thereafter under the EOW/EOM Pilot Program.

. . . Interpretations and Policies:

.01–.14 No change

* * * * *

The text of the proposed rule change is also available on the Exchange's Web site (*http://www.cboe.com/AboutCBOE/CBOELegalRegulatoryHome.aspx*), at the Exchange's Office of the Secretary, and at the Commission.

II. Self-Regulatory Organization's Statement of the Purpose of, and Statutory Basis for, the Proposed Rule Change

In its filing with the Commission, the Exchange included statements concerning the purpose of and basis for the proposed rule change and discussed any comments it received on the proposed rule change. The text of these statements may be examined at the places specified in Item IV below. The Exchange has prepared summaries, set forth in sections A, B, and C below, of the most significant aspects of such statements.

[1] 15 U.S.C. 78s(b)(1).

[2] 17 CFR 240.19b–4.

A. Self-Regulatory Organization's Statement of the Purpose of, and Statutory Basis for, the Proposed Rule Change

1. Purpose

On September 14, 2010, the Commission approved a CBOE proposal to establish a pilot program under which the Exchange is permitted to list P.M.-settled options on broad-based indexes to expire on (a) any Friday of the month, other than the third Friday-of-the-month, and (b) the last trading day of the month.[3] Under the terms of the End of Week/End of Month Expirations Pilot Program (''Program''), EOWs and EOMs are permitted on any broad-based index that is eligible for regular options trading. EOWs and EOMs are cash-settled and have European-style exercise. The proposal became effective on a pilot basis for a period of fourteen months that commenced on the next full month after approval was received to establish the Program[4] and was subsequently extended.[5] The Program is scheduled to expire on April 14, 2014. The Exchange believes that the Program has been successful and well received by its Trading Permit Holders and the investing public during that the time that it has been in operation. The Exchange hereby proposes to extend the Program until November 3, 2014. This proposal does not request any other changes to the Program.

Pursuant to the order approving the establishment of the Program, two months prior to the conclusion of the pilot period, CBOE is required to submit an annual report to the Commission, which addresses the following areas: Analysis of Volume & Open Interest, Monthly Analysis of EOW & EOM Trading Patterns and Provisional Analysis of Index Price Volatility. The Exchange has submitted, under separate cover, the annual report in connection with the present proposed rule change. Confidential treatment under the Freedom of Information Act is requested regarding the annual report.

If, in the future, the Exchange proposes an additional extension of the Program, or should the Exchange propose to make the Program permanent (which the Exchange currently intends to do), the Exchange will submit an annual report (addressing the same areas referenced above and consistent with the order approving the establishment of the Program) to the Commission at least two months prior to the expiration date of the Program. The annual report will be provided to the Commission on a confidential basis. Any positions established under the Program will not be impacted by the expiration of the Program.

The Exchange believes there is sufficient investor interest and demand in the Program to warrant its extension. The Exchange believes that the Program has provided investors with additional means of managing their risk exposures and carrying out their investment objectives. Furthermore, the Exchange has not experienced any adverse market effects with respect to the Program.

The Exchange believes that the proposed extension of the Program will not have an adverse impact on capacity.

2. Statutory Basis

The Exchange believes the proposed rule change is consistent with the Securities Exchange Act of 1934 (the ''Act'') and the rules and regulations thereunder applicable to the Exchange and, in particular, the requirements of Section 6(b) of the Act.[6] Specifically, the Exchange believes the proposed rule change is consistent with the Section 6(b)(5)[7] requirements that the rules of an exchange be designed to prevent fraudulent and manipulative acts and practices, to promote just and equitable principles of trade, to foster cooperation and coordination with persons engaged in regulating, clearing, settling, processing information with respect to, and facilitation transactions in securities, to remove impediments to and perfect the mechanism of a free and open market and a national market system, and, in general, to protect investors and the public interest. Additionally, the Exchange believes the proposed rule change is consistent with the Section 6(b)(5)[8] requirement that the rules of an exchange not be designed to permit unfair discrimination between customers, issuers, brokers, or dealers.

In particular, the Exchange believes that the Program has been successful to date and states that it has not encountered any problems with the Program. The proposed rule change allows for an extension of the Program for the benefit of market participants. Additionally, the Exchange believes that there is demand for the expirations offered under the Program and believes that that EOWs and EOMs will continue to provide the investing public and other market participants increased opportunities to better manage their risk exposure.

B. Self-Regulatory Organization's Statement on Burden on Competition

CBOE does not believe that the proposed rule change will impose any burden on competition that is not necessary or appropriate in furtherance of the purposes of the Act. Specifically, the Exchange believes that, by extending the expiration of the Program, the proposed rule change will allow for further analysis of the Program and a determination of how the Program shall be structured in the future. In doing so, the proposed rule change will also serve to promote regulatory clarity and consistency, thereby reducing burdens on the marketplace and facilitating investor protection.

C. Self-Regulatory Organization's Statement on Comments on the Proposed Rule Change Received From Members, Participants, or Others

The Exchange neither solicited nor received comments on the proposed rule change.

III. Date of Effectiveness of the Proposed Rule Change and Timing for Commission Action

Because the proposed rule change does not (i) significantly affect the protection of investors or the public interest; (ii) impose any significant burden on competition; and (iii) become operative for 30 days from the date on which it was filed, or such shorter time as the Commission may designate if consistent with the protection of investors and the public interest, the proposed rule change has become effective pursuant to Section 19(b)(3)(A) of the Act[9] and Rule 19b–4(f)(6)(iii) thereunder.[10]

The Exchange has asked the Commission to waive the 30-day operative delay so that the proposal may become operative immediately upon filing. The Commission believes that waiving the 30-day operative delay is consistent with the protection of investors and the public interest, as it will allow the pilot program to continue

[3] *See* Securities Exchange Act Release No. 62911 (September 14, 2010), 75 FR 57539 (September 21, 2010) (order approving SR–CBOE–2009–075).

[4] *Id.*

[5] *See* Securities Exchange Act Release No. 65741 (November 14, 2011), 76 FR 72016 (November 21, 2011) (immediately effective rule change extending the Program through February 14, 2013). *See also* Securities Exchange Act Release No. 68933 (February 14, 2013), 78 FR 12374 (February 22, 2013) (immediately effective rule change extending the Program through April 14, 2014).

[6] 15 U.S.C. 78f(b).

[7] 15 U.S.C. 78f(b)(5).

[8] *Id.*

[9] 15 U.S.C. 78s(b)(3)(A).

[10] 17 CFR 240.19b–4(f)(6)(iii). As required under Rule 19b–4(f)(6)(iii), the Exchange provided the Commission with written notice of its intent to file the proposed rule change, along with a brief description and the text of the proposed rule change, at least five business days prior to the date of filing of the proposed rule change, or such shorter time as designated by the Commission.

uninterrupted, thereby avoiding investor confusion that could result from a temporary interruption in the pilot program. For this reason, the Commission designates the proposed rule change to be operative upon filing.[11]

At any time within 60 days of the filing of the proposed rule change, the Commission summarily may temporarily suspend such rule change if it appears to the Commission that such action is necessary or appropriate in the public interest, for the protection of investors, or otherwise in furtherance of the purposes of the Act.

IV. Solicitation of Comments

Interested persons are invited to submit written data, views, and arguments concerning the foregoing, including whether the proposed rule change is consistent with the Act. Comments may be submitted by any of the following methods:

Electronic Comments

- Use the Commission's Internet comment form (*http://www.sec.gov/rules/sro.shtml*); or
- Send an email to *rule-comments@sec.gov.* Please include File Number SR–CBOE–2014–027 on the subject line.

Paper Comments

- Send paper comments in triplicate to Secretary, Securities and Exchange Commission, 100 F Street NE., Washington, DC 20549–1090.

All submissions should refer to File Number SR–CBOE–2014–027. This file number should be included on the subject line if email is used. To help the Commission process and review your comments more efficiently, please use only one method. The Commission will post all comments on the Commission's Internet Web site (*http://www.sec.gov/rules/sro.shtml*). Copies of the submission, all subsequent amendments, all written statements with respect to the proposed rule change that are filed with the Commission, and all written communications relating to the proposed rule change between the Commission and any person, other than those that may be withheld from the public in accordance with the provisions of 5 U.S.C. 552, will be available for Web site viewing and printing in the Commission's Public Reference Room at 100 F Street NE., Washington, DC 20549–1090 on official business days between the hours of 10:00 a.m. and 3:00 p.m. Copies of such filing also will be available for inspection and copying at the principal office of the Exchange. All comments received will be posted without change; the Commission does not edit personal identifying information from submissions. You should submit only information that you wish to make available publicly. All submissions should refer to File Number SR–CBOE–2014–027, and should be submitted on or before April 28, 2014.

For the Commission, by the Division of Trading and Markets, pursuant to delegated authority.[12]

Kevin M. O'Neill,

Deputy Secretary.

[FR Doc. 2014–07633 Filed 4–4–14; 8:45 am]

BILLING CODE 8011–01–P

[11] For purposes only of waiving the 30-day operative delay, the Commission has also considered the proposed rule's impact on efficiency, competition, and capital formation. *See* 15 U.S.C. 78c(f).

[12] 17 CFR 200.30–3(a)(12).

SECURITIES AND EXCHANGE COMMISSION

[Release No. 34–71846; File No. SR–OCC–2014–06]

Self-Regulatory Organizations; The Options Clearing Corporation; Notice of Filing and Immediate Effectiveness of Proposed Rule Change To Make a Change Which Would Authorize the Executive Chairman, the Management Vice Chairman, or the President To Delegate to Other OCC Officers Their Authority To Review and Approve Certain Clearing Member Business Expansion Requests and Changes in Facilities Management Arrangements, Provided That Such Delegate Is an Officer of the Rank of Senior Vice President or Higher

April 1, 2014.

Pursuant to Section 19(b)(1) of the Securities Exchange Act of 1934 (''Act'')[1] and Rule 19b–4 thereunder,[2] notice is hereby given that on March 28, 2014, The Options Clearing Corporation (''OCC'') filed with the Securities and Exchange Commission (''Commission'') the proposed rule change as described in Items I and II below, which Items have been prepared by the clearing agency. OCC filed the proposal pursuant to Section 19(b)(3)(A) of the Act[3] and Rule 19b–4(f)(6) thereunder.[4] The Commission is publishing this notice to solicit comments on the proposed rule change from interested persons.

I. Clearing Agency's Statement of the Terms of Substance of the Proposed Rule Change

This proposed rule change by OCC would make an administrative rule change to its By-Laws and Rules (collectively, ''Rules'') which would authorize the Executive Chairman, the Management Vice Chairman, or the President to delegate to other OCC officers their authority to review and approve certain clearing member business expansion requests and changes in facilities management arrangements, provided that such delegate is an officer of the rank of Senior Vice President or higher.

II. Clearing Agency's Statement of the Purpose of, and Statutory Basis for, the Proposed Rule Change

In its filing with the Commission, the clearing agency included statements concerning the purpose of and basis for the proposed rule change and discussed any comments it received on the proposed rule change. The text of these statements may be examined at the places specified in Item IV below. The clearing agency has prepared summaries, set forth in sections A, B, and C below, of the most significant aspects of such statements.

(A) Clearing Agency's Statement of the Purpose of, and Statutory Basis for, the Proposed Rule Change

The purpose of this proposed rule change is to expand the number of OCC officers with delegated authority to review and approve certain business expansion requests and changes in facilities management arrangements i.e., a request or change for which a clearing member has sought review on an expedited basis. Currently, OCC's Rules provide that the Executive Chairman, the Management Vice Chairman or the President are the only OCC officers with such delegated authority. OCC proposes that these officers be allowed to delegate their authority to perform such reviews and approve such requests or changes to any officer of the rank of Senior Vice President or higher.

By way of background, OCC's Risk Committee (''Committee'') is responsible for reviewing and approving clearing member requests to clear a type or a kind of transaction for which it is not currently approved to clear through OCC (i.e., a business expansion

[1] 15 U.S.C. 78s(b)(1).

[2] 17 CFR 240.19b–4.

[3] 15 U.S.C. 78s(b)(3)(A).

[4] 17 CFR 240.19b–4(f)(6). As required by Rule 19b-4(f)(6)(iii) of the Act, OCC has given the Commission written notice of its intent to file the proposed rule change, along with a brief description and text of the proposed rule change, at least five business days prior to the date of filing of the proposed rule change, or such sorter time as designated by the Commission.

request).[5] The Committee is also responsible for making certain determinations with respect to facilities management arrangements between clearing members. Specifically, the Committee determines whether a clearing member receiving facilities management services has the operational capability, experience and competence to perform the obligations of clearing membership should the facilities management agreement (''FMA'') with another clearing member be terminated.[6] In addition, if a clearing member proposes to enter into an FMA to receive facilities management services, the Committee must determine that the FMA meets certain conditions set forth in OCC's By-Laws.[7]

The Committee has delegated the Executive Chairman, the Management Vice Chairman or the President with authority to review and approve both business expansion requests and requests to enter into a facilities management arrangements in response to requests by clearing members for expedited review. Such approval is then subject to the Committee's review and ratification at its next regularly scheduled meeting. In light of recent changes to OCC's management structure,[8] as well as a recommendation from the Committee's Chairman, OCC is now proposing to provide the same expedited review and approval authority to any OCC officer of the rank of Senior Vice President or higher who has been delegated by the Executive Chairman, the Management Vice Chairman or the President with such authority. OCC believes the proposed change will provide it with operational flexibility because additional individuals will be able to provide expedited approval of business expansion requests and facilitates management arrangements. Approvals by such delegates would be subject to Committee review and ratification, as described above.

In accordance with the above OCC is proposing to amend OCC By-Law, Article 5, Section 1, Interpretation and Policy .03, which concerns business expansion requests and OCC Rule 309, Interpretation and Policy .01 and .02, which concerns facilities management arrangements.

OCC believes that the proposed rule change is consistent with Section 17A(b)(3)(F) of the Act[9] because it is designed to promote the prompt and accurate clearance and settlement of securities transactions and the protection of securities investors and the public interest, by allowing additional OCC officers to review and approve business expansion requests and facilities management arrangements on an expedited basis. By allowing the Executive Chairman, the Management Vice Chairman or the President to delegate authority to review and provide expedited approval of business expansion requests and facilities management arrangements to OCC officers of the rank of Senior Vice President or higher, clearing members and their customers will have more timely access to OCC services for which they qualify. The proposed rule change is not inconsistent with any rules of OCC, including those proposed to be amended.

(B) Clearing Agency's Statement on Burden on Competition

OCC does not believe that the proposed rule change would impose any burden on competition that is not necessary or appropriate in furtherance of the purposes of the Act.[10] The proposed rule change will help ensure that OCC will be able to provide fair and open access to its services in a timely and efficient manner because additional OCC officers will be able to provide approval of business expansion requests and facilities management arrangements. To the extent OCC's clearing members are affected by the proposed rule change, OCC believes that, by allowing an officer of the rank of Senior Vice President or higher who has been delegated by the Executive Chairman, the Management Vice Chairman or the President with authority to review and provide expedited approval of business expansion requests and facilities management arrangements, all of OCC's clearing members will have greater access to its services. Accordingly, OCC does not believe that the proposed rule will impose any burden on competition that is not necessary or appropriate in furtherance of the purposes of the Act.

(C) Clearing Agency's Statement on Comments on the Proposed Rule Change Received From Members, Participants, or Others

Written comments on the proposed rule change were not and are not intended to be solicited with respect to the proposed rule change and none have been received.

III. Date of Effectiveness of the Proposed Rule Change and Timing for Commission Action

Because the foregoing proposed rule change does not: (i) Significantly affect the protection of investors or the public interest; (ii) impose any significant burden on competition; and (iii) become operative for 30 days from the date on which it was filed, or such shorter time as the Commission may designate, if consistent with the protection of investors and the public interest, it has become effective pursuant to Section 19(b)(3)(A) of the Act and Rule 19b–4(f)(6)(iii) thereunder.

At any time within 60 days of the filing of the proposed rule change, the Commission summarily may temporarily suspend such rule change if it appears to the Commission that such action is necessary or appropriate in the public interest, for the protection of investors, or otherwise in furtherance of the purposes of the Act. If the Commission takes such action, the Commission shall institute proceedings under Section 19(b)(2)(B) of the Act[11] to determine whether the proposed rule should be approved or disapproved.

IV. Solicitation of Comments

Interested persons are invited to submit written data, views and arguments concerning the foregoing, including whether the proposed rule change is consistent with the Act. Comments may be submitted by any of the following methods:

Electronic Comments

- Use the Commission's Internet comment form (*http://www.sec.gov/rules/sro.shtml*); or
- Send an email to *rule-comments@sec.gov*. Please include File Number SR–OCC–2014–06 on the subject line.

Paper Comments

- Send paper comments in triplicate to Secretary, Securities and Exchange Commission, 100 F Street NE., Washington, DC 20549–1090.

All submissions should refer to File Number SR–OCC–2014–06. This file number should be included on the subject line if email is used. To help the Commission process and review your comments more efficiently, please use only one method. The Commission will post all comments on the Commission's Internet Web site (*http://www.sec.gov/rules/sro.shtml*). Copies of the submission, all subsequent

[5] OCC By-Law, Article V, Section 1, Interpretation and Policy .03(e).

[6] OCC Rule 309.

[7] OCC By-Law, Article V, Section 1, Interpretation and Policy .05.

[8] *See* Securities Exchange Act Release No. 70076 (July 30, 2013), 78 FR 47449 (August 5, 2013), (SR–OCC–2013–09).

[9] 15 U.S.C. 78q–1(b)(3)(F).

[10] 15 U.S.C. 78q–1(b)(3)(I).

[11] 15 U.S.C. 78s(b)(2)(B).

amendments, all written statements with respect to the proposed rule change that are filed with the Commission, and all written communications relating to the proposed rule change between the Commission and any person, other than those that may be withheld from the public in accordance with the provisions of 5 U.S.C. 552, will be available for Web site viewing and printing in the Commission's Public Reference Room, 100 F Street NE., Washington, DC 20549 on official business days between the hours of 10:00 a.m. and 3:00 p.m. Copies of the filing also will be available for inspection and copying at the principal office of OCC and on OCC's Web site (*http://www.theocc.com/about/publications/bylaws.jsp*). All comments received will be posted without change; the Commission does not edit personal identifying information from submissions. You should submit only information that you wish to make available publicly. All submissions should refer to File Number SR–OCC–2014–06 and should be submitted on or before April 28, 2014

For the Commission, by the Division of Trading and Markets, pursuant to delegated authority.[12]

Kevin M. O'Neill,

Deputy Secretary.

[FR Doc. 2014–07643 Filed 4–4–14; 8:45 am]

BILLING CODE 8011–01–P

SECURITIES AND EXCHANGE COMMISSION

[Release No. 34–71845; File No. SR–NYSEArca–2014–31]

Self-Regulatory Organizations; NYSE Arca, Inc.; Notice of Filing and Immediate Effectiveness of Proposed Rule Change Amending Its Option Trading Rules To Extend the Operation of Its Pilot Program Regarding Minimum Value Sizes for Opening Transactions in New Series of Flexible Exchange Options

April 1, 2014.

Pursuant to Section 19(b)(1)[1] of the Securities Exchange Act of 1934 (the ''Act'')[2] and Rule 19b–4 thereunder,[3] notice is hereby given that, on March 27, 2014, NYSE Arca, Inc. (the ''Exchange'' or ''NYSE Arca'') filed with the Securities and Exchange Commission (the ''Commission'') the proposed rule change as described in Items I and II below, which Items have been prepared by the self-regulatory organization. The Commission is publishing this notice to solicit comments on the proposed rule change from interested persons.

I. Self-Regulatory Organization's Statement of the Terms of Substance of the Proposed Rule Change

The Exchange proposes to amend its option trading rules to extend the operation of its pilot program (''Pilot Program'') regarding minimum value sizes for opening transactions in new series of flexible exchange options (''FLEX Options''), currently scheduled to expire on March 31, 2014, until the earlier of July 31, 2014 or approval of the Exchange's proposal to adopt the Pilot Program on a permanent [sic]. The text of the proposed rule change is available on the Exchange's Web site at *www.nyse.com,* at the principal office of the Exchange, and at the Commission's Public Reference Room.

II. Self-Regulatory Organization's Statement of the Purpose of, and Statutory Basis for, the Proposed Rule Change

In its filing with the Commission, the self-regulatory organization included statements concerning the purpose of, and basis for, the proposed rule change and discussed any comments it received on the proposed rule change. The text of those statements may be examined at the places specified in Item IV below. The Exchange has prepared summaries, set forth in sections A, B, and C below, of the most significant parts of such statements.

A. Self-Regulatory Organization's Statement of the Purpose of, and Statutory Basis for, the Proposed Rule Change

1. Purpose

The Exchange hereby proposes to amend its option trading rules to extend the operation of its Pilot Program regarding minimum value sizes for opening transactions in new FLEX series, currently scheduled to expire on March 31, 2014,[4] until July 31, 2014. The Exchange has submitted a separate filing to the Commission proposing to adopt the existing Pilot Program on a permanent basis.[5] The Exchange is submitting this proposed four-month extension of the Pilot Program so that the program may continue to operate uninterrupted while the Commission considers the Exchange's proposed adoption of the Pilot Program on a permanent basis. Accordingly, the proposed extension to the Pilot Program will end the earlier of July 31, 2014 or approval of the Exchange's proposal to adopt the Pilot Program on a permanent basis.

This filing does not propose any substantive changes to the Pilot Program and contemplates that all other terms of FLEX Options will remain the same. Overall, the Exchange believes that extending the Pilot Program will benefit public customers and other market participants who will be able to use FLEX Options to manage risk for smaller portfolios. In support of the proposed extension of the Pilot Program, and as required by the terms of the Pilot Program's implementation,[6] the Exchange has submitted to the Commission a Pilot Program Report that provides an analysis of the Pilot Program covering the period during which the Pilot Program has been in effect. This Pilot Program Report includes (i) data and analysis on the open interest and trading volume in (a) FLEX Equity Options that have opening transactions in new FLEX series with a minimum size of 0 to 249 contracts and less than $1 million in underlying value; (b) FLEX Index Options that have opening transactions in new FLEX series with a minimum opening size of less than $10 million in underlying equivalent value; and (ii) analysis on the types of investors that initiated opening FLEX Equity and Index Options transactions in new FLEX series (*i.e.,* institutional, high net worth, or retail). The Pilot Program Report has been submitted to the Commission as Exhibit 3 to SR–NYSEArca–2014 [sic].[7]

The Exchange believes that there is sufficient investor interest and demand in the Pilot Program to warrant extension for another three months. The Exchange believes that the Pilot Program has provided investors with additional means of managing their risk exposures and carrying out their investment objectives. The Exchange has not experienced any adverse market effects with respect to the Pilot Program.

In the event the Exchange does not receive approval to adopt the Pilot Program on a permanent basis by July 31, 2014 and proposes an additional extension of the Pilot Program, the Exchange will submit, along with any filing proposing such amendments to the Pilot Program, an additional Pilot

[12] 17 CFR 200.30–3(a)(12).

[1] 15 U.S.C.78s(b)(1).

[2] 15 U.S.C. 78a.

[3] 17 CFR 240.19b-4.

[4] *See* Securities Exchange Act Release No. 69267 (April 2, 2013), 77 FR 20997 (April 8, 2013) (SR–NYSEArca–2013–27).

[5] SR–NYSEArca–2014–25, proposing to adopt the Pilot Program on a permanent Basis [sic] was submitted to the Commission on March 17 [sic], 2014.

[6] *See infra* note 7 [sic].

[7] *Supra* note 5.

Program Report covering the period during which the Pilot Program was in effect and including the details referenced above, along with the nominal dollar value of the underlying security of each trade. The Pilot Program Report would be submitted to the Commission at least one month prior to the expiration date of the Pilot Program.

The Exchange notes that any positions established under this Pilot Program would not be impacted by the expiration of the Pilot Program. For example, a 10-contract FLEX Equity Option opening position that overlies less than $1 million in the underlying security and expires in January 2016 could be established during the Pilot Program. If the Pilot Program were not extended or adopted on a permanent basis, the position would continue to exist and any further trading in the series would be subject to the minimum value size requirements for continued trading in that series.

The Exchange believes that the Pilot Program has been successful and well-received by its membership and the investing public for the period that it has been in operation as a Pilot Program.[8]

2. Statutory Basis

The proposed rule change is consistent with Section 6(b) of the Act,[9] in general, and furthers the objectives of Section 6(b)(5),[10] in particular, in that it is designed to prevent fraudulent and manipulative acts and practices, to promote just and equitable principles of trade, to foster cooperation and coordination with persons engaged in facilitating transactions in securities, and to remove impediments to and perfect the mechanism of a free and open market and a national market system. Specifically, the Exchange believes that the proposed extension of the Pilot Program, which eliminates the minimum value size applicable to opening FLEX transactions in new FLEX series, would provide greater opportunities for investors to manage risk through the use of FLEX Options. Further, the Exchange notes that it has not experienced any adverse effects from the operation of the Pilot Program. The Exchange further notes that extending the Pilot Program for an additional four months will remove impediments to and perfect the mechanism of a free and open market because it will enable the Pilot Program to continue uninterrupted pending review of the Exchange's rule proposal to adopt the Pilot Program on a permanent basis.

B. Self-Regulatory Organization's Statement on Burden on Competition

The Exchange does not believe that the proposed rule change will impose any burden on competition that is not necessary or appropriate in furtherance of the purposes of the Act. The proposed change is being made to extend the operation of the Pilot Program to allow adequate time for the Commission to consider the Exchange's proposal to permanently adopt the elimination of the existing minimum value size applicable to opening transactions in new FLEX series. Other competing options exchanges have rules that do not impose minimum value size requirements for opening transactions in new FLEX series.[11] Thus, the proposed changes will not impose any burden on competition while providing that the elimination of the minimum value size requirements for opening transactions in new FLEX series continues without interruption until such time that permanent approval is granted by the Commission.

C. Self-Regulatory Organization's Statement on Comments on the Proposed Rule Change Received From Members, Participants, or Others

No written comments were solicited or received with respect to the proposed rule change.

III. Date of Effectiveness of the Proposed Rule Change and Timing for Commission Action

The Exchange has filed the proposed rule change pursuant to Section 19(b)(3)(A)(iii) of the Act[12] and Rule 19b–4(f)(6) thereunder.[13] Because the proposed rule change does not: (i) Significantly affect the protection of investors or the public interest; (ii) impose any significant burden on competition; and (iii) become operative prior to 30 days from the date on which it was filed, or such shorter time as the Commission may designate, if consistent with the protection of investors and the public interest, the proposed rule change has become effective pursuant to Section 19(b)(3)(A) of the Act[14] and Rule 19b–4(f)(6) thereunder.[15]

A proposed rule change filed under Rule 19b–4(f)(6)[16] normally does not become operative prior to 30 days after the date of the filing. However, pursuant to Rule 19b–4(f)(6)(iii),[17] the Commission may designate a shorter time if such action is consistent with the protection of investors and the public interest. The Exchange has asked the Commission to waive the 30-day operative delay so that the proposal may become operative immediately upon filing. The Commission notes that waiving the 30-day operative delay would allow the Pilot Program to continue without interruption while the Commission considers the Exchange's proposal to permanently adopt the Pilot Program, and believes that waiving the 30-day operative delay is consistent with the protection of investors and the public interest.[18] Therefore, the Commission hereby waives the 30-day operative delay and designates the proposal operative upon filing.

At any time within 60 days of the filing of the proposed rule change, the Commission summarily may temporarily suspend such rule change if it appears to the Commission that such action is necessary or appropriate in the public interest, for the protection of investors, or otherwise in furtherance of the purposes of the Act. If the Commission takes such action, the Commission shall institute proceedings under Section 19(b)(2)(B) of the Act[19] to determine whether the proposed rule change should be approved or disapproved.

IV. Solicitation of Comments

Interested persons are invited to submit written data, views, and arguments concerning the foregoing, including whether the proposed rule change is consistent with the Act. Comments may be submitted by any of the following methods:

[8] The Pilot Program was initiated on May 12, 2010. *See* Securities Exchange Act Release No. 62054 (May 6, 2010), 75 FR 27381 (May 14, 2010) (SR–NYSEArca-2010–34).

[9] 15 U.S.C. 78f(b).

[10] 15 U.S.C. 78f(b)(5).

[11] *See* Chicago Board Options Exchange (''CBOE'') Rule 24A.4.

[12] 15 U.S.C. 78s(b)(3)(A)(iii).

[13] 17 CFR 240.19b–4(f)(6).

[14] 15 U.S.C. 78s(b)(3)(A).

[15] 17 CFR 240.19b–4(f)(6). In addition, Rule 19b–4(f)(6) requires a self-regulatory organization to give the Commission written notice of its intent to file the proposed rule change, along with a brief description and text of the proposed rule change, at least five business days prior to the date of filing of the proposed rule change, or such shorter time as designated by the Commission. The Exchange has satisfied this requirement.

[16] 17 CFR 240.19b–4(f)(6).

[17] 17 CFR 240.19b–4(f)(6)(iii).

[18] For purposes only of waiving the 30-day operative delay, the Commission has considered the proposed rule's impact on efficiency, competition, and capital formation. *See* 15 U.S.C. 78c(f).

[19] 15 U.S.C. 78s(b)(2)(B).

Electronic Comments

- Use the Commission's Internet comment form (*http://www.sec.gov/rules/sro.shtml*); or
- Send an email to *rule-comments@sec.gov*. Please include File Number SR–NYSEArca–2014–31 on the subject line.

Paper Comments

- Send paper comments in triplicate to Secretary, Securities and Exchange Commission, 100 F Street, NE., Washington, DC 20549–1090.

All submissions should refer to File Number SR–NYSEArca–2014–31. This file number should be included on the subject line if email is used. To help the Commission process and review your comments more efficiently, please use only one method. The Commission will post all comments on the Commission's Internet Web site (*http://www.sec.gov/rules/sro.shtml*). Copies of the submission, all subsequent amendments, all written statements with respect to the proposed rule change that are filed with the Commission, and all written communications relating to the proposed rule change between the Commission and any person, other than those that may be withheld from the public in accordance with the provisions of 5 U.S.C. 552, will be available for Web site viewing and printing in the Commission's Public Reference Room, 100 F Street NE., Washington, DC 20549, on official business days between the hours of 10:00 a.m. and 3:00 p.m. Copies of the filing also will be available for inspection and copying at the principal office of the Exchange. All comments received will be posted without change; the Commission does not edit personal identifying information from submissions. You should submit only information that you wish to make available publicly. All submissions should refer to File Number SR–NYSEArca–2014–31 and should be submitted on or before April 28, 2014.

For the Commission, by the Division of Trading and Markets, pursuant to delegated authority.[20]

Kevin M. O'Neill,

Deputy Secretary.

[FR Doc. 2014–07642 Filed 4–4–14; 8:45 am]

BILLING CODE 8011–01–P

[20] 17 CFR 200.30–3(a)(12).

SECURITIES AND EXCHANGE COMMISSION

[Release No. 34–71843; File No. SR–CME–2014–10]

Self-Regulatory Organizations; Chicago Mercantile Exchange Inc.; Notice of Filing and Immediate Effectiveness of Proposed Rule Change To Amend the Fee Schedule Applicable to Its MXN OTC IRS Clearing Offering

April 1, 2014.

Pursuant to Section 19(b)(1) of the Securities Exchange Act of 1934 (''Act'' or ''Exchange Act''),[1] and Rule 19b–4 thereunder,[2] notice is hereby given that on March 24, 2014, Chicago Mercantile Exchange Inc. (''CME'') filed with the Securities and Exchange Commission (''Commission'') the proposed rule change described in Items I, II and III below, which Items have been prepared primarily by CME. CME filed the proposal pursuant to Section 19(b)(3)(A) of the Act,[3] and Rule 19b–4(f)(2)[4] thereunder so that the proposal was effective upon filing with the Commission. The Commission is publishing this notice to solicit comments on the proposed rule change from interested persons.

I. Self-Regulatory Organization's Statement of the Terms of Substance of the Proposed Rule Change

CME is proposing to amend the fee schedule that currently applies to its OTC Interest Rate Swap clearing offering by adopting a fee waiver program that applies to Mexican Peso (''MXN'') over-the-counter (''OTC'') interest rate swap (''IRS'') house accounts. The text of the proposed rule change is below. Italicized text indicates additions; no deletions are shown.

* * * * *

Mexican Peso (MXN) Over-the-Counter (OTC) Interest Rate Swaps (IRS) House Fee Waiver

Program Purpose

The purpose of the Program is to incentivize market participants to submit transactions in the MXN OTC IRS product listed below to the Clearing House for clearing, which will improve market liquidity. The resulting addition of liquidity benefits all participants in the market.

Product Scope

MXN OTC IRS cleared by the Clearing House (''Product'').

Eligible Participants

There is no limit to the number of participants that may participate in the Program. The fee incentive described below will be open to all market participants and will be automatically applied to all transaction fees for house accounts on MXN OTC IRS.

Program Term

Start date is April 1, 2014. End date is March 31, 2015.

Hours

The Program will be applicable regardless of the transaction time.

Program Incentives

Fee Waiver. All market participants that submit transactions in the Products to the Clearing House will have their transaction fees for house accounts waived.

* * * * *

II. Self-Regulatory Organization's Statement of the Purpose of, and Statutory Basis for, the Proposed Rule Change

In its filing with the Commission, CME included statements concerning the purpose and basis for the proposed rule change and discussed any comments it received on the proposed rule change. The text of these statements may be examined at the places specified in Item IV below. CME has prepared summaries, set forth in sections A, B, and C below, of the most significant aspects of such statements.

A. Self-Regulatory Organization's Statement of the Purpose of, and Statutory Basis for, the Proposed Rule Change

CME is registered as a derivatives clearing organization with the Commodity Futures Trading Commission and currently offers clearing services for many different futures and swaps products. With this filing, CME proposes to make certain amendments related to the fees it applies to certain interest rate swaps cleared at CME. The proposed changes involve a fee waiver program that applies to house account clearing of MXN OTC IRS products. The changes are designed to incentivize market participants to submit additional transactions in MXN OTC IRS products to CME for clearing. There is no limit to the number of participants that may participate in the proposed fee waiver program; it will be open to all market participants and will be automatically applied to all transaction fees for house accounts on MXN OTC IRS.

The changes that are described in this filing are limited to fee changes for OTC IRS products. Although the proposed changes would become effective on

[1] 15 U.S.C. 78s(b)(1).

[2] 17 CFR 240.19b–4.

[3] 15 U.S.C. 78s(b)(3)(A).

[4] 17 CFR 240.19b–4(f)(2).

filing, CME plans to operationalize the fee waiver program on April 1, 2014. The terms of program are set to expire on March 31, 2015.

The proposed fee changes are limited to CME's business as a derivatives clearing organization clearing products under the exclusive jurisdiction of the Commodity Futures Trading Commission (''CFTC'') and do not materially impact CME's security-based swap clearing business in any way. CME has also certified the proposed rule changes that are the subject of this filing to the Commodity Futures Trading Commission (''CFTC'') in CFTC Submission 14–082.

CME believes the proposed rule changes are consistent with the requirements of the Exchange Act including Section 17A of the Exchange Act.[5] More specifically, the proposed rule changes establish or change a member due, fee or other charge imposed by CME under Section 19(b)(3)(A)(ii)[6] of the Securities Exchange Act of 1934 and Rule 19b–4(f)(2)[7] thereunder. CME believes that the proposed fee change is consistent with the requirements of the Securities Exchange Act of 1934 and the rules and regulations thereunder and, in particular, to 17A(b)(3)(D)[8], because the proposed fee changes apply equally to all market participants clearing MXN OTC IRS in house accounts and therefore the proposed changes provide for the equitable allocation of reasonable dues, fees and other charges among participants. CME also notes that it operates in a highly competitive market in which market participants can readily direct business to competing venues. As such, the proposed changes are appropriately filed pursuant to Section 19(b)(3)(A)[9] of the Act and paragraph (f)(2) of Rule 19b–4 thereunder.

B. Self-Regulatory Organization's Statement on Burden on Competition

CME does not believe that the proposed rule change will have any impact, or impose any burden, on competition. The proposed rule changes modify pricing for house account clearing of MXN OTC IRS products. These products are swaps under the exclusive jurisdiction of the CFTC, and, as such, these proposed changes do not affect the security-based swap clearing activities of CME in any way and therefore do not impose any burden on competition that is inappropriate in furtherance of the purposes of the Act.

C. Self-Regulatory Organization's Statement on Comments on the Proposed Rule Change Received From Members, Participants, or Others

CME has not solicited, and does not intend to solicit, comments regarding this proposed rule change. CME has not received any unsolicited written comments from interested parties.

III. Date of Effectiveness of the Proposed Rule Change and Timing for Commission Action

The foregoing rule change has become effective upon filing pursuant to Section 19(b)(3)(A)[10] of the Act and paragraph (f)(2) of Rule 19b–4 thereunder.[11] At any time within 60 days of the filing of the proposed rule change, the Commission summarily may temporarily suspend such rule change if it appears to the Commission that such action is necessary or appropriate in the public interest, for the protection of investors, or otherwise in furtherance of the purposes of the Act.

IV. Solicitation of Comments

Interested persons are invited to submit written data, views and arguments concerning the foregoing, including whether the proposed rule change is consistent with the Act. Comments may be submitted by any of the following methods:

Electronic Comments

- Use the Commission's Internet comment form (*http://www.sec.gov/rules/sro.shtml*), or
- Send an email to *rule-comments@sec.gov*. Please include File No. SR–CME–2014–10 on the subject line.

Paper Comments

- Send paper comments in triplicate to Secretary, Securities and Exchange Commission, 100 F Street NE., Washington, DC, 20549–1090.

All submissions should refer to File Number SR–CME–2014–10. This file number should be included on the subject line if email is used. To help the Commission process and review your comments more efficiently, please use only one method. The Commission will post all comments on the Commission's Internet Web site (*http://www.sec.gov/rules/sro.shtml*). Copies of the submission, all subsequent amendments, all written statements with respect to the proposed rule change that are filed with the Commission, and all written communications relating to the proposed rule change between the Commission and any person, other than those that may be withheld from the public in accordance with the provisions of 5 U.S.C. 552, will be available for Web site viewing and printing in the Commission's Public Reference Room, 100 F Street NE., Washington, DC 20549, on official business days between the hours or 10:00 a.m. and 3:00 p.m. Copies of such filing also will be available for inspection and copying at the principal office of CME and on CME's Web site at *http://www.cmegroup.com/market-regulation/rule-filings.html*.

All comments received will be posted without change; the Commission does not edit personal identifying information from submissions. You should submit only information that you wish to make available publicly.

All submissions should refer to File Number SR–CME–2014–10 and should be submitted on or before April 28, 2014.

For the Commission, by the Division of Trading and Markets, pursuant to delegated authority.[12]

Kevin M. O'Neill,

Deputy Secretary.

[FR Doc. 2014–07640 Filed 4–4–14; 8:45 am]

BILLING CODE 8011–01–P

[5] 15 U.S.C. 78q–1.

[6] 15 U.S.C. 78s(b)(3)(A)(ii).

[7] 17 CFR 240.19b–4(f)(2).

[8] 15 U.S.C. 78q–1(b)(3)(D).

[9] 15 U.S.C. 78s(b)(3)(A).

[10] 15 U.S.C. 78s(b)(3)(A).

[11] 17 CFR 240.19b–4(f)(2)

[12] 17 CFR 200.30–3(a)(12).

SECURITIES AND EXCHANGE COMMISSION

[Release No. 34–71837; File No. SR–NYSE–2014–12]

Self-Regulatory Organizations; New York Stock Exchange LLC; Notice of Filing of Proposed Rule Change Amending Rule 98 To Adopt a Principles-Based Approach To Prohibit the Misuse of Material Nonpublic Information and Make Conforming Changes to Other Exchange Rules

April 1, 2014.

Pursuant to Section 19(b)(1)[1] of the Securities Exchange Act of 1934 (the ''Act'')[2] and Rule 19b–4 thereunder,[3] notice is hereby given that, on March 18, 2014, New York Stock Exchange LLC (''NYSE'' or the ''Exchange'') filed with the Securities and Exchange Commission (the ''Commission'') the proposed rule change as described in Items I, II, and III below, which Items have been prepared by the self-regulatory organization. The

[1] 15 U.S.C. 78s(b)(1).

[2] 15 U.S.C. 78a.

[3] 17 CFR 240.19b–4.

Commission is publishing this notice to solicit comments on the proposed rule change from interested persons.

I. Self-Regulatory Organization's Statement of the Terms of Substance of the Proposed Rule Change

The Exchange proposes to amend Rule 98 to adopt a principles-based approach to prohibit the misuse of material nonpublic information and make conforming changes to other Exchange Rules. The text of the proposed rule change is available on the Exchange's Web site at *www.nyse.com*, at the principal office of the Exchange, and at the Commission's Public Reference Room.

II. Self-Regulatory Organization's Statement of the Purpose of, and Statutory Basis for, the Proposed Rule Change

In its filing with the Commission, the self-regulatory organization included statements concerning the purpose of, and basis for, the proposed rule change and discussed any comments it received on the proposed rule change. The text of those statements may be examined at the places specified in Item IV below. The Exchange has prepared summaries, set forth in sections A, B, and C below, of the most significant parts of such statements.

A. Self-Regulatory Organization's Statement of the Purpose of, and the Statutory Basis for, the Proposed Rule Change

1. Purpose

The Exchange proposes to amend Rule 98 to adopt a principles-based approach to prohibit the misuse of material nonpublic information by a member organization that operates a DMM unit and make conforming changes to other Exchange rules. The proposed rule changes would provide more flexibility for how a member organization may organize its DMM unit. The Exchange believes that the proposed rule change adopts an approach more similar to the rules governing equity market makers on NYSE Arca Equities, Inc. (''NYSE Arca''), the NASDAQ Stock Market LLC (''Nasdaq''), and the BATS Exchange, Inc. (''BATS''),[4] while maintaining certain specified protections that reflect the unique role of DMMs at the Exchange.[5] The proposed changes will provide member organizations operating DMM units with the ability to integrate DMM unit trading with other trading units, while maintaining narrowly tailored restrictions to address that DMMs while on the Trading Floor may have access to certain Floor-based non-public information. The proposed rule change will also enable DMM units to maintain procedures and controls to prevent the misuse of material, non-public information that are effective and appropriate for that member organization.

As discussed in more detail below, the Exchange proposes to redefine the structure of a DMM unit by deleting the definitions of ''aggregation unit'' and cross reference to Rule 200 of Regulation SHO (''Regulation SHO'')[6] and ''integrated proprietary aggregation unit'' and redefining the term ''DMM unit.'' The Exchange believes that these proposed revisions will enable member organizations to integrate DMM units with other trading operations within the member organization, including, if applicable, a customer-facing operation, subject to Exchange and federal rules that prohibit the misuse of material nonpublic information. In addition, in order to streamline the rule, the Exchange proposes several non-substantive clarifying and conforming changes to the provisions of Rule 98 that govern these areas. The Exchange also proposes to eliminate duplicative provisions in the rule regarding back-office operations provided by an approved person or member organization. Finally, the Exchange proposes to delete rules relating to the DMM that are obsolete.

A. Background

Rule 98, which was last amended in 2008,[7] incorporates various organizational structures for operating a DMM unit. Rule 98(c) provides for the operation of a ''DMM unit,'' which can be either a stand-alone member organization or an ''aggregation unit''[8] within a member organization. As a general matter, unless otherwise specified in Rule 98, a DMM unit must maintain the confidentiality of both DMM confidential information and non-public orders.[9] A DMM unit therefore must not permit either other aggregation units of the member organization or its approved person(s) to have access to DMM confidential information or non-public order information.[10]

Rule 98 defines the terms ''non-public order information'' and ''DMM confidential information'' separately. In the case of ''non-public order information,'' the Exchange seeks to protect price-sensitive non-DMM trading information that is not publicly available or that is shared with the DMM with an expectation of privacy. Thus, this definition captures any information relating to order flow at the Exchange, including verbal indications of interest made with an expectation of privacy, electronic order interest, e-quotes, reserve interest, or information about imbalances at the Exchange, that is not publicly-available on a real-time basis via an Exchange-provided datafeed, such as NYSE OpenBook®,[11] or otherwise publicly available.

''DMM confidential information'' refers to principal or proprietary trading activity of a DMM unit at the Exchange in the securities allocated to it pursuant to Rule 103B, including the unit's positions in those securities, decisions relating to trading or quoting in those securities, and any algorithm or computer system that is responsible for such trading activity and that interfaces with Exchange systems.

Rule 98(d) permits a member organization to operate the DMM business within a larger aggregation unit referred to as a ''integrated proprietary aggregation unit,'' which may only engage in proprietary trading activity, including electronic market making. Rules 98(d) and (f)(2) set forth the types of information barriers required within such a unit to separate the DMM trading at the Exchange from the trading by the unit's ''upstairs'' desk's trading in assigned securities in away markets or trading in related products.[12] In

[4] *See* Securities Exchange Act Release No. 60604 (Sept. 2, 2009), 76 FR 46272 (Sept. 8, 2009) (SR–NYSEArca–2009–78) (Order approving elimination of NYSE Arca rule that required market makers to establish and maintain specifically prescribed information barriers, including discussion of NYSE Arca and Nasdaq rules). *See also* Securities Exchange Act Release No. 61574 (Feb. 23, 2010), 75 FR 9455 (Mar. 2, 2010) (SR–BATS–2010–003) (Order approving amendments to BATS Exchange, Inc. (''BATS'') Rule 5.5 to move to a principles-based approach to protecting against the misuse of material, non-public information, and noting that the proposed change is consistent with the approaches of NYSE Arca and Nasdaq).

[5] This proposed rule change is not intended to address the rules governing options market makers.

[6] 17 CFR Part 242.200.

[7] *See* Securities Exchange Act Release No. 58329 (Aug. 6, 2008), 73 FR 48260 (Aug. 18, 2008) (SR–NYSE–2008–45).

[8] An ''aggregation unit'' is defined in Rule 98(b)(11) as any trading or market-making department, division, or desk that meets the requirements of the definition of ''independent trading unit'' pursuant to Rule 200 of Regulation SHO.

[9] *See* Rule 98(c)(2)(A).

[10] *See* Rule 98(c)(2)(A)(i) and (ii).

[11] NYSE OpenBook® provides aggregated limit-order volume that has been entered on the Exchange at price points for all NYSE-traded securities.

[12] ''Related products'' are defined as any derivative instruments that are related to a security allocated to a DMM unit, including options, warrants, hybrid securities, single-stock futures, security-based swap agreement, a forward contract,

Continued

particular, the rule requires the DMM unit to protect both non-public order information and DMM confidential information. When providing risk management to the DMM unit, the integrated proprietary aggregation unit may see traded positions of the DMM unit that have been printed to the Consolidated Tape, but cannot see where the DMM unit is quoting.[13]

When a DMM unit operates within an integrated proprietary aggregation unit or engages in off-Floor trading of products related to securities assigned to the DMM unit, Rule 98 specifically prohibits an individual DMM who moves off of the Floor of the Exchange from making DMM confidential information available to off-Floor personnel or systems of the integrated proprietary aggregation unit.[14] Senior managers of the approved person or parent member organization may provide general oversight to the DMM unit, provided that if the senior manager receives any DMM confidential information or non-public order information, he or she must not use such information to directly or indirectly influence trading based on that confidential information.[15]

Rule 98 further provides that individuals or systems, including computer algorithms, that are either responsible for trading in related products within the DMM unit or engaging in risk management on behalf of the DMM unit, are restricted from having access to DMM confidential information.[16] As noted above, the limited exceptions permit the persons or systems responsible for managing the risk of the DMM unit to have electronic access to the DMM unit's trades at the Exchange in securities allocated to the DMM unit, provided that such trades have been printed to the Consolidated Tape, and to electronically direct the trading of the DMM unit, subject to the DMM rules.[17]

In addition to specifying trading restrictions, Rule 98(e) provides that a DMM unit can share non-trading related services with a parent member organization or approved persons. However, to share non-trading related services, a DMM unit must obtain approval from NYSE Regulation and show that it has policies and procedures to maintain the confidentiality of DMM confidential information and non-public order information.

Because not all firms were immediately approved under ''new'' Rule 98, which was last amended in 2008, the Exchange kept the pre-2008 version of Rule 98 in its rulebook as ''Rule 98 Former.'' Because Rule 98 Former was referenced in a number of other Exchange rules, certain Exchange rules have double references depending on whether the DMM is approved under Rule 98 Former or the current rule.[18]

All DMM firms are now approved to operate under Rule 98, and are no longer subject to ''Rule 98 Former.''

B. Proposed Amendments to Rule 98

The Exchange proposes to amend Rule 98 to adopt a more principles-based approach that would permit a member organization operating a DMM unit to maintain and enforce its own policies and procedures to, among other things, prohibit the misuse of material nonpublic information and eliminate requirements that specify how a member organization must organize its DMM unit within the firm. While the proposed changes would provide the ability for member organizations to integrate their DMM units, the Exchange does not believe that the amendments will reduce in any way the protections against the misuse of material nonpublic information. Rather, the Exchange believes that by adding a principles-based approach that generally prohibits the misuse of material non-public information, the amended rule will provide for broader protections than the current rule, which protects only certain defined non-public information.

To achieve the goal of enabling greater integration of DMM units within a member organization, the Exchange proposes to revise the definitions set forth in Rule 98(b) to eliminate the various structures and instead use a single term to refer to DMM operations. As proposed, the term ''DMM unit'' would be amended to mean a trading unit within a member organization that is approved pursuant to Rule 103 to act as a DMM unit. Accordingly, the Exchange proposes to eliminate the requirement that a DMM unit be an ''aggregation unit'', which is currently defined to mean any trading or market-making department, division or desk that meets the requirements of the definition of ''independent trading unit'' pursuant to Rule 200 of Regulation SHO.[19]

The Exchange proposes to decouple the Rule 98 definition from Regulation SHO in part because the two rules seek to achieve different purposes. Rule 200(f) of Regulation SHO sets forth the requirements for qualifying as an ''independent trading unit'' for the purpose of order marking requirements under Rule 200. In practice, broker dealers use information barriers to meet the requirements of an independent trading unit under Regulation SHO. By contrast, Rule 98 does not concern the netting of position information. While member organizations operating DMM units would be required to comply with Regulation SHO, the Exchange does not believe that it needs to prescribe in its rules how a firm must structure its DMM operations for purposes of complying with Regulation SHO.

For similar reasons, the Exchange does not believe it needs to maintain a definition unique to the Exchange and DMMs of an ''integrated proprietary aggregation unit.'' This definition contemplates a DMM unit being part of an aggregation unit that engages in only proprietary trading activity. While a member organization may choose to structure in this manner, the Exchange does not believe it needs to be required. Rather, the Exchange believes that Rule 98 should provide flexibility for a member organization to structure its business, including any DMM operations, in a manner that a member organization believes is appropriate for its business purposes, subject to requirements to protect against the misuse of material, non-public information, as discussed below.

The Exchange proposes additional changes to Rule 98(b) to delete definitions that are no longer necessary in the revised rule. Specifically, the Exchange proposes to delete the definitions for ''DMM API,'' ''DMM account,'' ''customer-facing department,'' and ''non-trading related services.'' The terms DMM API and DMM account were based on Rule 104 before it was amended in 2008. Accordingly, the Exchange believes that these definitions are now obsolete. In addition, because the proposed rule changes are intended to provide principles-based instruction on how to operate a DMM unit, the rule no longer needs to define terms that support the

or any other instrument that is exercisable into or whose price is based upon or derived from a security listed on the Exchange. *See* Rule 98(b)(15). The Exchange proposes to make non-substantive edits to this definition to conform to other changes made to Rule 98, and, as discussed below, renumber the rule accordingly.

[13] *See* Rule 98(f)(1)(v) and (98(f)(2)(A).

[14] *See* Rule 98(d)(2)(B)(iv) and 98(f)(1)(A)(iii).

[15] *See* Rule 98(c)(2)(E).

[16] *See* Rule 98(f)(1)(A)(i), 98(f)(2)(A), and 98(f)(3)(C)(2).

[17] *See* Rule 98(f)(1)(A)(v), 98(f)(2)(a)(i), and 98(f)(3)(c)(iii) and (iv).

[18] *See* Rules 98A Former, 99 Former, 104T(a) (Former), 105(a) Former, 105(b) Former, 105(d) Former, 105 Guidelines section (m) Former, and 113 Former.

[19] The Exchange proposes to delete rule provisions that reference the terms ''aggregation unit'' and ''integrated proprietary aggregation unit.'' *See, e.g.,* Rule 98(c)(2)(B).

current, more prescriptive rule text. The Exchange proposes to delete the definitions of ''DMM'' and ''approved person'' as duplicative of the definitions set forth in Rules 2(i) and 2(c). The Exchange proposes to make non-substantive edits to the definition of ''related products.'' The Exchange also proposes to make conforming amendments to Rule 2(j).

With these proposed definition changes, the Exchange believes that a member organization operating a DMM unit would be better positioned to integrate its DMM operations. For example, if a member organization engages in market-making operations on multiple exchanges, it may be optimal for a firm to house its DMM operations together with the other market-making operations, even if such operations are customer-facing. Another variation could be if a firm chooses to include all of its equity trading, including customer-facing operations, within a single independent trading unit. The Exchange believes that providing member organizations with the ability to integrate DMM operations could promote liquidity at the Exchange because the DMM operations would be part of a larger unit with greater sources of liquidity.[20]

The Exchange notes that notwithstanding how a member organization chooses to structure its operations, that firm would need to meet the requirements of Section 15(g) of the Act,[21] which requires every registered broker or dealer to ''establish, maintain, and enforce written policies and procedures reasonably designed, taking into consideration the nature of such broker's or dealer's business, to prevent the misuse . . . of material, nonpublic information by such broker or dealer or any person associated with such broker or dealer.''

Accordingly, the Exchange proposes to revise current Rule 98(c)(2) and replace it with new text based on NYSE Arca Equities Rule 6.3 (Prevention of the Misuse of Material Nonpublic Information) and BATS Rule 5.5 (Prevention of the Misuse of Material, Non-Public Information) that specifies that a member organization seeking approval to operate a DMM unit pursuant to Rule 98 must maintain and enforce written policies and procedures reasonably designed, taking into consideration the nature of such member organization's business, (i) to prevent the misuse of material, non-public information by such member organizations or persons associated with such member organization and (ii) to ensure compliance with applicable federal laws and regulations and with Exchange rules.[22]

Similar to NYSE Arca Equities Rule 6.3, the Exchange further proposes to add rule text that provides examples of conduct that would constitute the misuse of material, non-public information, including, but not limited to: (A) Trading in any securities issued by a corporation, or in any related products, while in possession of material-non-public information concerning the issuer; (B) trading in a security or related product, while in possession of material non-public information concerning imminent transactions in the security or related product; or (C) disclosing to another person or entity any material, non-public information involving a corporation whose shares are publicly traded or an imminent transaction in an underlying security or related product for the purpose of facilitating the possible misuse of such material, non-public information.[23]

The Exchange believes that with the proposed change to Rule 98(c)(2), member organizations will be able to utilize a flexible, principles-based approach to modify their policies and procedures as appropriate to reflect changes to their business model, business activities, or to the securities market itself. Moreover, while specified information barriers may no longer be required, a member organization's business model or business activities may dictate that an information barrier or functional separation be part of the appropriate set of policies and procedures that would be reasonably designed to achieve compliance with applicable securities laws and regulations, and with applicable Exchange rules.

More specifically, the Exchange notes that providing member organizations with the ability to integrate DMM unit operations with other equity trading operations, which may include customer-facing trading desks, would enable member organizations to better manage risk and adopt uniform trading models across multiple markets. Currently, because DMM units need to be walled off from other market-making desks, the DMM units cannot leverage quoting models that may have been developed for the other market-making desks. And because of the Rule 98-mandated separation, member organizations are restricted in their ability to manage risk across the DMM unit and other market-making units. As a result, the costs associated with developing separate quoting models and risk strategies for a stand-alone DMM unit become prohibitive as compared to a member organization's investment in operating an integrated market-making unit that may include both internalized customer flow and registered market-making on other exchanges. The Exchange believes that if DMM units could be integrated with other market-making units, it could not only enable member organizations to enhance their overall risk management, but could also potentially lead to flow that would otherwise be internalized being directed instead to the Exchange.

Consistent with the proposal to adopt a principles-based approach to protect against the misuse of material non-public information generally, the Exchange proposes to restructure the defined terms in current Rule 98 that relate to non-public information. First, the Exchange proposes to re-define the definition of ''non-public information'' as ''Floor-based non-public information.'' The Exchange proposes this redefinition to distinguish this type of non-public information, which is non-DMM information to which a DMM while on the Trading Floor may have access due to the unique role of DMMs on the Trading Floor, from any other non-public information that is covered by proposed Rule 98(c)(2). As discussed in more detail below, the Exchange proposes to maintain restrictions in proposed Rule 98(c)(3) tailored to the Floor-based activities of DMM units and proposes to use the term ''Floor-based non-public order information'' to distinguish which information those provisions are intended to protect.[24]

[20] The Exchange notes that under Regulation SHO, determination of a seller's net position is based on the seller's position in the security in all proprietary accounts. *See* Securities Exchange Act Release No. 50103 (July 28, 2004), 69 FR 48008, 48010, n.22 (Aug. 6, 2004); *see also* Securities Exchange Act Release Not 48709 (Oct. 29, 2003), 68 FR 62972, 62991 and 62994 (Nov. 6, 2003); Letter from Richard R. Lindsey, Director, Division of Market Regulation, to Roger D. Blanc, Wilkie Farr & Gallagher, SEC No-Action Letter, 1998 SEC No-Act. LEXIS 1038, p. 5 (Nov. 23, 1998); Securities Exchange Act Release No. 30772 (June 3, 1992), 57 FR 24415, 24419 n.47 (June 9, 1992); Securities Exchange Act Release No. 27938 (Apr. 23, 1990), 55 FR 17949, 17950 (Apr. 30, 1990).

[21] 15 U.S.C. 78o(g).

[22] The Exchange also proposes to revise Rule 98(c)(1) to replace the term ''NYSE Regulation, Inc.'' with the term ''Exchange.'' Pursuant to Rule 0, the term ''Exchange'' may also mean FINRA staff working on behalf of the Exchange and NYSE Regulation, Inc. pursuant to a regulatory services agreement.

[23] Because Rule 98 defines the term ''related product,'' the Exchange proposes to use the term ''related product'' instead of ''related security,'' which is the term used in NYSE Arca Equities Rule 6.3.

[24] The Exchange proposes non-substantive changes to this definition that better reflect how

Continued

Second, the Exchange proposes to delete the definition of DMM confidential information as duplicative of proposed new Rule 98(c)(2), which protects against the misuse of material non-public information. As noted above, the term ''DMM confidential information'' includes position, trading, and quoting information of the DMM unit. This information is non-public to persons or entities that are not part of the member organization, but critical information for a member organization to operate and manage its own risks. The Exchange believes that the policy concerns relating to specifying separate protections for this information are no longer applicable. Specifically, unlike specialists, DMMs are not agents for orders on the Exchange's book and do not have any negative obligations. Instead, DMMs are required to act as market makers in assigned securities, subject to affirmative obligations to maintain a fair and orderly market.[25] While the DMM continues to have the ability to, and does, trade manually from the Floor, the vast majority of the DMM's quotes are entered by means of algorithms initiated off-Floor. Moreover, DMM interest manually entered intraday during a slow state or to participate in a verbal transaction with a Floor broker still yields to public orders.[26] In addition, to the extent a DMM on the Floor may have access to Floor-based non-public order information, proposed Rule 98(c)(3) would continue to specify protections against the misuse of that information by the member organization.

The Exchange believes that the proposed principles-based approach to protect against the misuse of material non-public order information specified in proposed Rule 98(c)(2) would ensure that a member organization would be required to protect against the misuse of any material non-public information that currently falls within the definition of DMM confidential information. As noted above, this includes refraining from trading while in possession of material non-public information concerning imminent transactions in the security or related product. The Exchange believes that moving to a principles-based approach rather than prescribing how and when to protect the DMM's own quoting and trading information would provide member organizations operating DMM units with appropriate tools to better manage risk across a firm, including integrating DMM unit positions and quoting information with other quotes and positions by the firm, or as applicable, by the respective independent trading unit. Specifically, the Exchange believes that it is appropriate for risk management purposes for a member organization operating a DMM unit to be able to consider both DMM unit outstanding quotes as well as traded positions for purposes of calculating net positions consistent with Rule 200 of Regulation SHO, calculating intra-day net capital positions, and managing risk both generally as well as in compliance with Rule 15c3–5 under the Act (the ''Market Access Rule'').[27] The Exchange notes that any risk management operations would need to operate consistent with the requirement to protect against the misuse of material non-public information.

The Exchange notes that if DMM units are integrated with other market-making operations, they would be subject to existing rules that prohibit member organizations from disadvantaging their customers or other market participants by improperly capitalizing on a member organization's access to the receipt of material, non-public information. As such, a member organization that integrates its DMM unit operations together with customer-facing operations would need to protect customer information consistent with existing obligations to protect customer information that already apply to equity market makers registered on other exchanges. For example, NYSE Rule 5320, which is substantially similar to FINRA Rule 5320 and NYSE Arca Equities Rule 5320 (generally referred to as the ''Manning Rule.''), generally prohibits a member organization from trading for its own account ahead of customer orders. Rule 5320(a) further provides that if a member organization trades at a price for its own account ahead of the customer order, it must execute the customer order up to the size and at the same or better price at which it traded for its own account. The Manning Rule sets forth certain exceptions to this requirement, including the Large Orders and Institutional Account Exceptions (Supplementary Material .01 to Rule 5320) and the No-Knowledge Exception (Supplementary Material .02 to Rule 5320). A member organization operating both a DMM unit, which engages in trading for its own account, and customer-facing operations would need to comply with the Manning Rule or meet one of the specified exceptions.[28] In addition, a member organization operating a DMM unit would also need to maintain policies and procedures to assure that it does not engage in any frontrunning of customer order information in violation of Exchange, FINRA, or federal rules. The Exchange notes that these are existing obligations that already govern equity market-making operations on other exchanges and therefore integrating DMM operations with such desks would not present any novel issues.

Proposed Rule 98(c)(3)–(7) would set forth the remaining specific restrictions for member organizations operating a DMM unit. In recognition of the unique role of DMMs, including limited Floor-based access to certain non-public order information,[29] the Exchange proposes to maintain certain prescriptions on how a DMM unit must operate. To effect this new structure, the Exchange proposes to delete subsections (d) and (f) of Rule 98 and move the sections of those rules that the Exchange proposes to retain to an amended subsection (c)(3)–(7) of the Rule, which include the relevant restrictions on trading within the unit. As proposed, the rule will no longer prescribe the type of trading in which a DMM unit may engage. Rather, the proposed rule will only specify the types of trading activities that would be restricted.

Proposed Rules 98(c)(3)(A)–(D) would set forth the restrictions specific to DMM units that address their unique role at the Exchange. Proposed Rule 98(c)(3)(A) would provide generally that a member organization shall protect against the misuse of Floor-based non-public order information. The rule would further specify who may have access to such Floor-based non-public order information (as permitted pursuant to Rule 104), which, as proposed, would be the Floor-based employees of the DMM unit and individuals responsible for the direct supervision of the DMM unit's Floor-based operations. The Exchange believes that the proposed rule change specifies in a more straight-forward manner who may have access to have non-public order information, and replaces the multiple references in the current Rule 98 to the same concept.[30]

Exchange systems currently operate. Specifically, the Exchange believes that concept of trading in ''slow mode'' is duplicative of the remaining rule text, which covers any order information that is made available to DMMs but that is not available to other market participants.

[25] *See* Rule 104.

[26] *See* Rule 72(c)(xi).

[27] 17 CFR Part 240.15c3–5.

[28] The Exchange notes that FINRA already monitors member organizations for compliance with Rule 5320.

[29] *See* Rule 104(j)(ii).

[30] *See, e.g.,* Rules 98(c)(2)(A)(i)–(ii), (d)(2)(B)(i)–(iii), (f)(1)(A)(i), (f)(3)(C)(ii). The current rule is structured as to who may not have access. The Exchange believes it is clearer to specify who may have access to such information.

Proposed Rule 98(c)(3)(B) would specify the restrictions applicable to employees of the DMM unit while on the Trading Floor. First, while on the Trading Floor of the Exchange, employees of the DMM unit, except as provided for in Rule 36.30, may trade only DMM securities and only on or through the systems and facilities of the Exchange, as permitted by Exchange Rules.[31] Second, while on the Trading Floor, Floor-based employees may not communicate with individuals or systems responsible for making trading decisions for related products or for away-market trading in DMM securities.[32] Finally, because a DMM unit may be part of a larger trading unit that includes customer-facing operations, the Exchange proposes to add a new restriction that while on the Trading Floor, employees of the DMM unit shall not have access to customer information or the DMM unit's position in related products.[33] The Exchange believes that these proposed restrictions will ensure that while on the Floor, employees of a DMM unit will not be quoting or trading based on material non-public information related to customer information or trading in related products.

As with the current rule, the Exchange proposes to maintain restrictions on what happens if a non-Floor based individual becomes aware of Floor-based non-public order information. The Exchange proposes to consolidate the current rule concerning wall-crossing provisions into proposed Rule 98(c)(3)(C), which would provide that when a Floor-based employee of a DMM unit moves to a location off of the Trading Floor of the Exchange or if any person that provides risk management oversight or supervision of the Floor-based operations of the DMM unit is aware of Floor-based non-public order information, he or she shall not (1) make such information available to customers, (2) make such information available to individuals or systems responsible for making trading decisions in DMM securities in away markets or related products, or (2) use any such information in connection with making trading decisions in DMM securities in away markets or related products.

The Exchange believes that consolidating the wall-crossing provisions into a single provision achieves the same purpose as the current rule, which states the same concept in multiple places.[34] The proposed rule is augmented by adding that Floor-based non-public order information cannot be made available to customers. The proposed rule would cover any individual, whether it is an individual that leaves the Floor or a manager providing oversight of Floor operations, to neither use nor make available any non-public order information that the individual becomes aware of. The Exchange believes that replacing the concept of ''access to'' information with ''aware of'' information provides a clearer standard for member organizations and is generally more consistent with federal rules.[35] Specifically, because the provision is intended to ensure that information is not used inappropriately, inappropriate use of such information could only occur if someone is aware of that information.

For example, a DMM unit could be part of a larger trading unit that engages in customer-facing market making activities on multiple exchanges. With the proposed changes to Rule 98 generally, a manager within that unit would be able to monitor risk across the unit, including positions from trading as a DMM at the Exchange, without breaching any prohibitions against the misuse of material nonpublic information. Assume that a Floor-based DMM needs to take on a larger risk profile in a security because of a proposed Floor broker transaction and needs to discuss this proposed transaction with the off-Floor manager. Once this topic is discussed with the off-Floor manager, that manager is now aware of Floor-based non-public order information, and therefore must protect against the misuse of this information. This type of wall-crossing procedure is consistent with current practices within member organizations.

As with the current rule, but with new rule numbering, the Exchange proposes to maintain that the DMM unit may make available to a Floor broker associated with or affiliated with an approved person or member organization any information that the DMM would be permitted to provide under Exchange rules to an unaffiliated Floor broker.[36]

To ensure that all trading activity by a DMM unit in DMM securities at the Exchange is available for review, the Exchange proposes to add a provision that any interest entered by the DMM unit in DMM securities at the Exchange must be entered through systems that identify such interest as DMM interest.[37] As proposed, because the Exchange's trading systems continue to evolve, the Exchange believes it is unnecessary to specify which system(s) a DMM unit must use. However, this rule would require the DMM unit to use a system that would enable such interest to be identified as DMM trading interest.

The Exchange notes that the Rule 104 obligations that relate to whether a DMM is long or short, *i.e.,* Rules 104(g)(i)(A)(III) and (h), are applicable to the DMM unit's position in DMM securities together with any position of a Regulation SHO independent trading unit of which the DMM unit may be included. For example, if a DMM unit is combined with market-making desks that are trading on away markets, it would be the position of that entire unit in DMM securities, and not just the DMM's Exchange-traded positions, that would be relevant for those rules. To ensure that the Exchange can monitor for compliance with these rules, the Exchange proposes to add to Rule 98 that the member organization must provide the Exchange with real-time unit position information for any trading in DMM securities by the DMM unit and any independent trading unit of which it is a part.[38] For example, if a DMM unit is part of an independent trading unit that engages in trading on other markets in DMM securities, the real-time position update would need to incorporate any away-market transactions in DMM securities by that independent trading unit.

Currently, Rule 98 permits an integrated proprietary aggregation unit to engage in options market making

[31] *Compare* proposed Rule 98(c)(3)(A) *with* Rule 98(f)(1)(A)(ii). The Exchange also proposes to replace the term ''Floor'' with the term ''Trading Floor'' to reflect the use of that term in Rules 6A and 36.

[32] *Compare* proposed Rule 98(c)(3)(B) *with* Rule 98(d)(2)(B)(iii).

[33] *Compare* proposed Rule 98(c)(3)(B)(iii) *with* Rule 98(f)(1)(A)(ii). In addition, the Exchange believes that proposed Rule 98(c)(3)(B)(iii) replaces the concerns expressed in current Rule 98(c)(2)(C) that the DMM unit not have access to material non-public information that is in possession of other aggregation unit. The Exchange does not believe it needs to maintain Rule 98(c)(2)(C) because it restates the general concept of how aggregation units under Regulation SHO are structured, and as noted above, Rule 98 no longer follows the aggregation unit model.

[34] *See* Rules 98(c)(2)(E)(i), 98(d)(2)(B)(iv), and (f)(1)(A)(3).

[35] *See* 17 CFR 240.10b5–1(b) (specifying that a purchase or sale of securities constitutes trading on the basis of material nonpublic information when the person making the purchase or sale was aware of the material nonpublic information when the person made the purchase or sale).

[36] *Compare* proposed Rule 98(c)(3)(D) *with* Rule 98(c)(2)(A)(ii). The Exchange proposes to replace the term ''DMM'' with ''DMM unit'' to be clear that the proposed rule covers any staff of the DMM unit located on the Trading Floor.

[37] *See* proposed Rule 98(c)(4).

[38] *See* proposed Rule 98(c)(5). The Exchange proposes to delete Rule 98(d)(4) and subparagraphs from the rule both because the Exchange does not believe it needs to separately identify DMM audit trail requirements and because Rule 132B no longer exists.

(electronic only), provided that the DMM unit is walled off from the options market making trading desk. Similar to NYSE Arca Equities, the Exchange proposes to eliminate prescriptive rules regarding how to structure DMM operations together with other market-making operations, and instead believes that the principles-based approach set forth in proposed Rule 98(c)(2) should protect against the misuse of material nonpublic information.[39] The Exchange proposes to amend Rule 98 to specify restrictions that are unique to the Exchange by virtue of the close physical proximity of the NYSE MKT LLC options trading floor. As proposed, the DMM unit may not operate as a specialist or market maker on the Exchange or the NYSE MKT LLC (''NYSE MKT'') equities or options trading floors in related products, unless specifically permitted in Exchange rules.[40] The Exchange notes that a member organization that operates a DMM unit may be a specialist or market maker on NYSE MKT provided that it maintains appropriate information barriers.

The Exchange also proposes to maintain the existing requirement that the member organization maintain information barriers between the DMM unit and any investment banking or research departments.[41] The amended rule would also continue to provide that no DMM or DMM unit may be directly supervised or controlled by an individual associated with an approved person or the member organization who is assigned to any investment banking or research departments.[42] The only difference between the proposed rule text and the current rule is that the Exchange proposes to delete that a DMM unit may not be supervised or controlled by an individual assigned to a customer-facing department. As noted above, the Exchange believes that member organizations should not be restricted in their ability to combine DMM operations with customer-facing operations, subject to the restrictions enumerated in amended Rule 98 and the proposed Exchange and federal requirements that prohibit the misuse of material nonpublic information, discussed above.

The Exchange also proposes to provide in proposed Rule 98(d) that the DMM rules will apply only to the DMM unit's quoting or trading in their DMM securities for their own accounts at the Exchange.[43] The Exchange has added that this restriction is only applicable to DMM unit trading for their own account to be clear that the DMM rule restrictions are not applicable to any customer orders routed to the Exchange by that member organization as agent.

The Exchange believes that by restructuring the rule to focus on protecting against the misuse of material non-public information, Rule 98 no longer needs to specify how a member organization or an approved person provides back-office support operations, such as clearing, stock loan, and compliance, for the DMM unit. Rather, the Exchange believes that how a member organization or approved person provides back-office operations to the DMM unit should not differ from how such services are provided to other trading units within that member organization or approved person. In addition, as proposed, amended Rule 98(c)(2) would require the member organization to protect against the misuse of material non-public information, which would govern all aspects of a member organization's operations. Accordingly, the Exchange proposes to delete in its entirety Rule 98(e).

The Exchange notes that if a person in the member organization or an approved person is providing non-trading related services to the DMM unit, and as a result of such relationship, becomes aware of Floor-based non-public order information, such person would be subject to the wall-crossing provisions of proposed Rule 98(c)(3)(C), which is applicable to any person who is aware of such information. Because these protections for Floor-based non-public order information are retained in the proposed revisions to Rule 98, and are applicable to approved persons pursuant to proposed amended Rule 98(a)(1), the Exchange believes that Rule 98(e), which concerns the sharing of non-trading related services, is redundant of existing regulatory requirements governing the operations of a broker-dealer. The Exchange proposes conforming amendments to Rule 36.30.

Because of the proposed restructuring of the rule, Rule 98(g) will be renumbered as Rule 98(e), Rule 98(h) will be renumbered as Rule 98(f), and Rule 98(j) will be renumbered as Rule 98(g). The Exchange is proposing conforming changes to these sections, including updating cross-references and changing the reference from the Division of Market Surveillance and NYSE Regulation to the Exchange.[44]

C. Other Proposed Amendments

As noted above, all DMM firms for which Rule 98 is applicable are now under the auspices of Rule 98. Accordingly, Rule 98 Former no longer has any application for any DMM units. The Exchange therefore proposes to delete Rule 98 Former and any rule that either references Rule 98 Former, *i.e.,* Rules 98A Former, 99 Former, and 104T(a)(Former) and supplementary material .13 (Former), or references a rule that is being proposed for deletion, *e.g.,* Rule 900. The Exchange also proposes to amend Rule 98(a) and 105 to delete references to Rule 98 Former.

In addition, the Exchange proposes to amend Rule 105 to delete Rule 105(b)–(d) and the Guidelines for DMM's Registered Security Option and Single Stock Futures Transactions Pursuant to Rule 105 (''Rule 105 Guidelines'') and make conforming amendments to Rule 36.30.[45] Rule 105 currently sets forth hedging guidelines to permit the DMM to trade listed options or single-stock futures that overlay DMM securities from the Trading Floor. Under Rule 98(f)(1), a DMM unit can obtain an exemption from the Rule 105 Guidelines to trade options or futures, provided that such trading is conducted by a walled-off, off-Floor trading desk.

Under proposed revisions to Rule 98, a DMM unit would no longer need to apply for an exemption from Rule 105 trading restrictions because, as discussed above, while on the Trading Floor, Floor-based employees may trade only DMM securities, *i.e.,* no related products, and only on or through the systems and facilities of the Exchange. Because there would not be any Floor-based trading in listed options or single-stock futures, the Rule 105 Guidelines specifying how such Floor-based trading may occur are now moot. Accordingly, the Exchange proposes to delete these rules. To conform other Exchange rules

[39] *See* footnote 4.

[40] *See* proposed Rule 98(c)(6). The Exchange notes that currently, the only time that a DMM unit may engage in market making in a related products under Exchange rules is on the NYSE MKT exchange, pursuant to NYSE MKT Rule 504(b)(5)—Equities. The NYSE does not have a similar exception.

[41] *Compare* proposed Rule 98(c)(7) *with* 98(c)(2)(A)(i) and (c)(2)((C). Investment banking activities include activities such as underwriting, tender offers, mergers, acquisitions, recapitalizations, etc. *See* Rule 98(f)(1).

[42] *Compare* proposed Rule 98(c)(7) *with* Rule 98(c)(2)(E)(ii).

[43] *Compare* proposed Rule 98(d) *with* Rules 98(c)(3) and (d)(3). As defined in proposed Rule 98(b)(3) (formerly, Rule 98(b)(5)), the DMM rules mean any rules that govern DMM conduct or trading. These would include, for example, Rules 36.30, 103, 103A, 103B, and 104.

[44] Pursuant to Rule 0, the reference to the Exchange in this rule may also mean FINRA.

[45] The Exchange proposes to amend Rule 105(a) to clarify that the restriction on pool dealing applies to the DMM unit for securities registered to that unit.

to this proposal, the Exchange also proposes to delete section (b) from each of Rules 1300 (streetTRACKS Gold Shares), 1300A (Currency Trust Shares), and 1300B (Commodity Trust Shares). Each of these subsections cross-reference Rule 105 Guidelines subsection (m) and would similarly be mooted by proposed Rule 98(c)(2)(B)(i). The Exchange proposes further conforming amendments to Rules 900(b) and (d).

In addition, because DMM units no longer have customer relationships, the Exchange proposes to delete in its entirety the DMM Booth Wire Policy, which is set forth in Rule 123B, as obsolete.

The Exchange notes that all member organizations currently operating DMM units already have in place written policies and procedures to comply with Rule 98, and such policies and procedures have been approved by NYSE Regulation.[46] In addition, FINRA has an exam program that reviews member organizations operating DMM units for compliance with such procedures. Because the proposed Rule 98 amendments would continue to require Exchange approval of any policies and procedures to protect against the misuse of material nonpublic information, if a member organization chooses to modify how it operates its DMM operations consistent with amended Rule 98, such revised policies and procedures would be subject to Exchange review before they could be implemented. In addition, once implemented, FINRA would continue to monitor a member organization's compliance with those policies and procedures consistent with the current exam-based regulatory program associated with Rule 98.

In addition, FINRA already has in place surveillances designed to monitor for manipulative activity and the Exchange believes that because DMM market-making activity is not materially different from market-making on other exchanges, these existing programs are reasonably designed to address any concerns that may be raised by a DMM unit being integrated with existing market-making operations.

2. Statutory Basis

The basis under the Act for this proposed rule change is the requirement under Section 6(b)(5)[47] that an Exchange have rules that are designed to promote the just and equitable principles of trade, to remove impediments to and perfect the mechanism of a free and open market and a national market system and, in general, to protect investors and the public interest. The Exchange believes that the proposed rule change would remove impediments to and perfect the mechanism of a free and open market by adopting a principles-based approach to permit a member organization operating a DMM unit to maintain and enforce policies and procedures to, among other things, prohibit the misuse of material non-public information and eliminating restrictions on how a member organization structures its DMM unit operations. The proposed amendments maintain the existing Rule 98 restrictions that are specific to the unique role of the DMM and also maintain the information barrier requirements between the DMM unit and any investment banking or research departments. Member organizations operating DMM units will continue to be subject to federal and Exchange requirements for protecting material non-public order information[48] and protecting customer orders that are the consistent with the existing rules governing broker dealers that operate as equity market makers on other registered exchanges.[49]

Accordingly, while certain prescriptive elements of Rule 98 are being deleted, the Exchange notes that the rule will still require that member organizations maintain and enforce policies and procedures reasonably designed to ensure compliance with applicable federal securities laws and regulations and with Exchange rules. The Exchange notes that such written policies and procedures will continue to be subject to oversight by the Exchange and therefore the elimination of prescribed restrictions should not reduce the effectiveness of the Exchange rules to protect against the misuse of material non-public information. Rather, member organizations will be able to utilize a flexible, principles-based approach to modify their policies and procedures as appropriate to reflect changes to their business model, business activities, or to the securities market itself. Moreover, while specified information barriers may no longer be required, a member organization's business model or business activities may dictate that an information barrier or functional separation be part of the appropriate set of policies and procedures that would be reasonably designed to achieve compliance with applicable securities laws and regulations, and with applicable Exchange rules. The Exchange therefore believes that the proposed rule change will maintain the existing protection of investors and the public interest that is currently set forth in Rule 98, while at the same time removing impediments to and perfecting a free and open market by moving to a principles-based approach to protect against the misuse of material non-public information.

The Exchange similarly believes that deleting the definition of ''DMM confidential information'' removes impediments to and perfects the mechanism of a free and open market as it will enable a member organization to share quoting and position information as may be necessary to meet order marking requirements under Regulation SHO or to comply with the Market Access Rule. The Exchange further believes that the proposed adoption of a principles-based approach to protect against the misuse of material non-public information, including specifically requiring refraining from trading based on material non-public information regarding imminent transactions in a security or related product, will protect investors and the public interest because it will assure the protection against the misuse of material non-public information and delete prescribed rules that may no longer meet this goal.

The Exchange also believes that amending Rule 98 to apply wall-crossing procedures to any individual who is aware of non-public order information both broadens the protection of the rule to any individual, while at the same time narrowly tailors the rule to when such protections should apply, *i.e.,* when an individual is aware of non-public order information and therefore could be in a position to make a purchase or sale of securities on the basis of such material nonpublic information. The Exchange believes that such clarifying changes remove impediments to and perfect the mechanism of a free and open market by assuring that the protections are applied when necessary.

In addition, the Exchange believes that deleting Rule 98 Former and all references thereto in Exchange rules removes impediments to and perfects the mechanism of a free and open market because Rule 98 Former no longer governs any member organizations or approved persons that operate a DMM unit, nor would it be applicable to any new DMM units, and therefore deleting the rule reduces any potential confusion of which version of

[46] FINRA currently approves Rule 98 procedures on behalf of NYSE Regulation, Inc. pursuant to a regulatory services agreement. *See supra* footnote 22.

[47] 15 U.S.C. 78f(b)(5).

[48] *See* 15 U.S.C. 78o(g) and proposed Rule 98(c)(2).

[49] *See* Rule 5320.

Rule 98 is applicable. For similar reasons, because DMMs would not be permitted to trade in related products while on the Trading Floor, the Exchange believes that the Rule 105 Guidelines are now moot, and deleting such rule reduces any potential confusion of which rules govern DMM unit trading in related products. Finally, the Exchange believes that deleting the Booth Wire Policy reduces confusion as such policy is now moot given that DMMs do not have public customers.

B. Self-Regulatory Organization's Statement on Burden on Competition

The Exchange does not believe that the proposed rule change will impose any burden on competition that is not necessary or appropriate in furtherance of the purposes of the Act. The Exchange operates the only-Floor-based equities market with DMMs. As such, any changes to Rule 98 would not impact any other markets. However, the Exchange believes Rule 98 currently imposes a burden on competition for the Exchange because it requires member organizations that operate a DMM unit to operate in a manner that the Exchange believes is more restrictive than necessary for the protection of investors or the public interest. The Exchange believes that the proposed rule change is pro-competitive because it adopts a principles-based approach that prohibit the misuse of material non-public information that is consistent with the rules of NYSE Arca, BATS, and Nasdaq governing equity market makers and should provide greater flexibility for how a member organization could structure its operations.

C. Self-Regulatory Organization's Statement on Comments on the Proposed Rule Change Received From Members, Participants, or Others

No written comments were solicited or received with respect to the proposed rule change.

III. Date of Effectiveness of the Proposed Rule Change and Timing for Commission Action

Within 45 days of the date of publication of this notice in the **Federal Register** or within such longer period (i) as the Commission may designate up to 90 days of such date if it finds such longer period to be appropriate and publishes its reasons for so finding or (ii) as to which the self-regulatory organization consents, the Commission will:

(A) By order approve or disapprove the proposed rule change, or

(B) Institute proceedings to determine whether the proposed rule change should be disapproved.

IV. Solicitation of Comments

Interested persons are invited to submit written data, views, and arguments concerning the foregoing, including whether the proposed rule change is consistent with the Act. Comments may be submitted by any of the following methods:

Electronic Comments

- Use the Commission's Internet comment form (*http://www.sec.gov/rules/sro.shtml*); or
- Send an email to *rule-comments@sec.gov.* Please include File Number SR–NYSE–2014–12 on the subject line.

Paper Comments

- Send paper comments in triplicate to Secretary, Securities and Exchange Commission, 100 F Street NE., Washington, DC 20549–1090.

All submissions should refer to File Number SR–NYSE–2014–12. This file number should be included on the subject line if email is used. To help the Commission process and review your comments more efficiently, please use only one method. The Commission will post all comments on the Commission's Internet Web site (*http://www.sec.gov/rules/sro.shtml*). Copies of the submission, all subsequent amendments, all written statements with respect to the proposed rule change that are filed with the Commission, and all written communications relating to the proposed rule change between the Commission and any person, other than those that may be withheld from the public in accordance with the provisions of 5 U.S.C. 552, will be available for Web site viewing and printing in the Commission's Public Reference Section, 100 F Street NE., Washington, DC 20549–1090. Copies of the filing will also be available for inspection and copying at the NYSE's principal office and on its Internet Web site at *www.nyse.com.* All comments received will be posted without change; the Commission does not edit personal identifying information from submissions. You should submit only information that you wish to make available publicly. All submissions should refer to File Number SR–NYSE–2014–12 and should be submitted on or before April 28,2014.

For the Commission, by the Division of Trading and Markets, pursuant to delegated authority.[50]

Kevin M. O'Neill,

Deputy Secretary.

[FR Doc. 2014–07634 Filed 4–4–14; 8:45 am]

BILLING CODE 8011–01–P

[50] 17 CFR 200.30–3(a)(12).

SECURITIES AND EXCHANGE COMMISSION

[Release No. 34–71839; File No. SR–NYSEArca–2014–25]

Self-Regulatory Organizations; NYSE Arca, Inc.; Notice of Filing of Proposed Rule Change To Make Permanent Its Pilot Program Regarding Minimum Value Sizes for Opening Transactions in New Series of Flexible Exchange Options and Establish New Minimum Value Sizes Applicable to Other FLEX Transactions and FLEX Quotes

April 1, 2014.

Pursuant to Section 19(b)(1)[1] of the Securities Exchange Act of 1934 (the ''Act'')[2] and Rule 19b–4 thereunder,[3] notice is hereby given that, on March 18, 2014, NYSE Arca, Inc. (the ''Exchange'' or ''NYSE Arca'') filed with the Securities and Exchange Commission (the ''Commission'') the proposed rule change as described in Items I, II, and III below, which Items have been prepared by the self-regulatory organization. The Commission is publishing this notice to solicit comments on the proposed rule change from interested persons.

I. Self-Regulatory Organization's Statement of the Terms of Substance of the Proposed Rule Change

The Exchange proposes to make permanent its pilot program (''Pilot Program'') regarding minimum value sizes for opening transactions in flexible exchange options (''FLEX Options'' or ''FLEX''), currently scheduled to expire on March 31, 2014 and establish new minimum value sizes applicable to other FLEX transactions and FLEX Quotes. The text of the proposed rule change is available on the Exchange's Web site at *www.nyse.com,* at the principal office of the Exchange, and at the Commission's Public Reference Room.

[1] 15 U.S.C. 78s(b)(1).

[2] 15 U.S.C. 78a.

[3] 17 CFR 240.19b–4.

II. Self-Regulatory Organization's Statement of the Purpose of, and Statutory Basis for, the Proposed Rule Change

In its filing with the Commission, the self-regulatory organization included statements concerning the purpose of, and basis for, the proposed rule change and discussed any comments it received on the proposed rule change. The text of those statements may be examined at the places specified in Item IV below. The Exchange has prepared summaries, set forth in sections A, B, and C below, of the most significant parts of such statements.

A. Self-Regulatory Organization's Statement of the Purpose of, and Statutory Basis for, the Proposed Rule Change

1. Purpose

The Exchange proposes to make permanent its Pilot Program regarding minimum value sizes for FLEX Options,[4] currently scheduled to expire on March 31, 2014.[5] The Exchange believes that the Pilot Program has been successful and well-received by its membership and the investing public for the period that it has been in operation as a Pilot Program.[6]

Minimum Value Sizes for FLEX Options

Prior to the initiation of the Pilot Program, the minimum value size requirement for every opening FLEX Request for Quotes and every responsive FLEX Quote [sic] under Rule 5.32(d)(2) was as follows:

- For an opening transaction (other than FLEX Quotes responsive to a FLEX Request for Quotes) in any FLEX series in which there is no open interest at the time the Request for Quotes is submitted, the minimum value size was (i) for FLEX Equity Options, the lesser of 250 contracts or the number of contracts overlying $1 million in the underlying securities; and (ii) for FLEX Index Options, $10 million Underlying Equivalent Value in the case of Broad Stock Index Group FLEX Index Options and $5 million Underlying Equivalent Value in the case of Stock Index Industry Group FLEX Index Options.

Pursuant to the terms of the existing Pilot Program, notwithstanding the above-described rule text, the minimum size for an opening transaction in a new FLEX Option series is one contract. As mentioned above, the Pilot Program is currently set to expire on March 31, 2014.

In addition to the minimum value size applicable to opening FLEX transactions in new FLEX series, as described above, Rule 5.32(d)(3)–(4) prescribes minimum value sizes for other FLEX transactions and FLEX Quotes as follows:

- For a transaction in any currently-opened FLEX series, the minimum value size is (i) for FLEX Equity Options, the lesser of 100 contracts or the number of contracts overlying $1 million in the underlying securities in the case of opening transactions, and 25 contracts in the case of closing transactions; and (ii) for FLEX Index Options, $1 million Underlying Equivalent Value in the case of both opening and closing transactions; or (iii) for either case, the remaining underlying size or Underlying Equivalent Value on a closing transaction, whichever is less.
- The minimum value size for FLEX Quotes responsive to a Request for Quotes is 25 contracts in the case of FLEX Equity Options and $1 million Underlying Equivalent Value in the case of FLEX Index Options or for either case the remaining underlying size or Underlying Equivalent Value on a closing transaction, whichever is less.

Proposal

The Exchange is proposing to make the minimum value size Pilot Program permanent. To accomplish this change, the Exchange is proposing to eliminate the rule text describing the Pilot Program, which is contained in Commentary .02 to Rule 5.32, and to eliminate the rule text describing the minimum value size requirements, which is contained in Rule 5.32(d)(2).

In support of approving the Pilot Program on a permanent basis, and as required by the Pilot Program's approval order, the Exchange is submitting to the Commission a Pilot Program report (''Report''), which is a public report detailing the Exchange's experience with the program.[7] Specifically, the Exchange is providing the Commission an annual report, containing data and analysis of underlying equivalent values, open interest and trading volume, and analysis of the types of investors that initiated opening FLEX Equity and Index Options transactions (*i.e.,* institutional, high net worth, or retail) in new FLEX series.

The Exchange believes that there is sufficient investor interest and demand in the Pilot Program to warrant its permanent approval. The Exchange believes that, for the period that the Pilot Program has been in operation, it has provided investors with additional means of managing their risk exposures and carrying out their investment objectives. Furthermore, as discussed in more detail below, the Exchange has not experienced any adverse market effects with respect to the Pilot Program.

The Exchange believes that eliminating the minimum value size requirements for opening transactions in new FLEX series on a permanent basis is important and necessary to the Exchange's efforts to create a product and market that provide its membership and investors interested in FLEX-type options with an improved but comparable alternative to the over-the-counter (''OTC'') market in customized options, which can take on contract characteristics similar to FLEX Options but are not subject to the same restrictions. By making the Pilot Program permanent, market participants would continue to have greater flexibility in determining whether to execute their customized options in an exchange environment or in the OTC market. The Exchange believes that market participants would benefit from being able to trade these customized options in an exchange environment in several ways, including, but not limited to, the following: (i) enhanced efficiency in initiating and closing out positions; (ii) increased market transparency; and (iii) heightened contra-party creditworthiness due to the role of The Options Clearing Corporation (''OCC'') as issuer and guarantor of FLEX Options. The Exchange also believes that the Pilot Program is wholly consistent with comments by then Secretary of the Treasury Timothy F. Geithner, to the U.S. Senate. In particular, Secretary Geithner has stated that:

> Market efficiency and price transparency should be improved in derivatives markets by requiring the clearing of standardized contracts through regulated [central counterparties] and by moving the standardized part of these markets onto regulated exchanges and regulated transparent electronic trade execution systems for OTC derivatives and by requiring development of a system for timely reporting of trades and prompt dissemination of prices and other trade information. Furthermore, regulated financial institutions should be encouraged to make greater use of regulated exchange-traded derivatives. Competition between appropriately regulated OTC

[4] FLEX Options provide investors with the ability to customize basic option features including size, expiration date, exercise style, and certain exercise prices. FLEX Options can be FLEX Index Options or FLEX Equity Options.

[5] *See* Securities Exchange Act Release No. 69267 (April 2, 2013), 78 FR 20997 (April 8, 2013) (SR–NYSEArca–2013–27).

[6] The Pilot Program was initiated on May 12, 2010. *See* Securities Exchange Act Release No. 62054 (May 6, 2010), 75 FR 27381 (May 14, 2010) (SR–NYSEArca–2010–34).

[7] A copy of the Report is attached as Exhibit 3.

derivatives markets and regulated exchanges will make both sets of markets more efficient and thereby better serve end-users of derivatives.[8]

The Exchange believes that the elimination of the minimum value size requirements for opening FLEX transactions in new FLEX series on a permanent basis would provide FLEX-participating OTP Holders with greater flexibility in structuring the terms of FLEX Options that best comports with their and their customers' particular needs. In this regard, the Exchange notes that the minimum value size requirements for opening FLEX transactions in new FLEX series were originally put in place to limit participation in FLEX Options to sophisticated, high net worth investors rather than retail investors. However, the Exchange believes that the restriction is no longer necessary and is overly restrictive. The Exchange has also not experienced any adverse market effects with respect to the Pilot Program eliminating the minimum value size requirements for opening FLEX transactions in new FLEX series. Again, based on the Exchange's experience to date and throughout the Pilot Program period, the minimum value size requirements are at times too large to accommodate the needs of OTP Holders and their customers—who may be institutional, high net worth or retail—that currently participate in the OTC market. In this regard, the Exchange notes that, prior to establishing the Pilot Program, it received numerous requests from broker-dealers representing institutional, high net worth and retail investors indicating that the minimum value size requirements for opening transactions in new FLEX series prevented them from bringing transactions that are already taking place in the OTC market to an exchange environment. The Exchange believes that eliminating the minimum value size requirements for opening transactions in new FLEX series on a permanent basis would further broaden the base of investors that use FLEX Options to manage their trading and investment risk, including investors that currently trade in the OTC market for customized options, where similar size restrictions do not apply. The Exchange also believes that this may open up FLEX Options to more retail investors. The Exchange does not believe that this raises any unique regulatory concerns because existing safeguards—such as certain position limit, exercise limit, and reporting requirements—continue to apply.[9] In addition, the Exchange notes that FLEX Options are subject to the options disclosure document (''ODD'') requirements of Rule 9b–1 [10] under the Securities Exchange Act of 1934 (the ''Act'').[11] No broker or dealer can accept an order from a customer to purchase or sell an option contract relating to an options class that is the subject of a definitive ODD (including FLEX Options), or approve the customer's account for the trading of such an option, unless the broker or dealer furnishes or has furnished to the customer a copy of the definitive ODD. The ODD contains a description, special features, and special risks of FLEX Options. Lastly, similar to any other options, FLEX Options are subject to OTP Holder organization supervision and suitability requirements, such as in Rule 9.2(b) (Account Supervision) and Rule 9.18(c) (Suitability).

In proposing the Pilot Program itself and in now proposing to make it permanent, the Exchange is cognizant of the need for market participants to have substantial options transaction capacity and flexibility to hedge their substantial investment portfolios, on the one hand, and the potential for adverse effects that the minimum value size restrictions were originally designed to address, on the other. However, the Exchange has not experienced any adverse market effects with respect to the Pilot Program. The Exchange is also cognizant of the OTC market, in which similar restrictions on minimum value size do not apply. In light of these considerations and Secretary Geithner's comments on moving the standardized parts of OTC contracts onto regulated exchanges, the Exchange believes that making the Pilot Program permanent is appropriate and reasonable and will provide market participants with additional flexibility in determining whether to execute their customized options in an exchange environment or in the OTC market. The Exchange believes that market participants benefit from being able to trade these customized options in an exchange environment in several ways, including, but not limited to, enhanced efficiency in initiating and closing out positions, increased market transparency, and heightened contra-party creditworthiness due to the role of OCC as issuer and guarantor of FLEX Options.

Pursuant to this filing, the Exchange is proposing to adopt the existing Pilot Program [12] on a permanent basis. Specifically, the Exchange proposes to eliminate all references to minimum size applicable to opening FLEX transactions as presently described in Rule 5.32(d)(2). The proposal to eliminate the minimum value size applicable to opening transactions in new FLEX series is similar to a rule change by the CBOE when adopting a similar pilot program on a permanent basis.[13]

Present Rules 5.32(d)(3)–(4) govern the minimum value sizes for FLEX Equity and FLEX Index Options transactions in currently opened FLEX series and FLEX Quotes in response to a Request for Quotes (''RFQ''). Subsection (3) establishes minimum value sizes of 100 contracts and 25 contracts respectively, for opening and closing FLEX Equity transactions in any currently-opened FLEX series and $1 million Underlying Equivalent Value in the case of FLEX Index transactions or, in either case the remaining underlying size or Underlying Equivalent Value on a closing transaction, whichever is less. Subsection (4) states the minimum value size for FLEX Quotes responsive to an RFQ shall be 25 contracts in the case of FLEX Equity Options and $1 million Underlying Equivalent Value in the case of FLEX Index Options or in either case the remaining underlying size or Underlying Equivalent Value on a closing transaction, whichever is less. The Exchange now proposes to adopt a minimum value size of one contract when opening and closing any Equity or Index FLEX Options transaction in previously opened FLEX series and for responses to an RFQ. This change, coupled with the proposed change to the minimum value size for opening transactions in new FLEX series (described above) will effectively establish a one contract minimum value size for all FLEX transactions and FLEX Quotes. A one contract minimum value size for all FLEX transactions and FLEX Quotes is based on similar rules governing minimum value size for FLEX Options approved for the CBOE.[14]

Adopting the same minimum value size for all FLEX transactions and FLEX Quotes would afford market

[8] See letter from Secretary Geithner to the Honorable Harry Reid, United States Senate (May 13, 2009), located at *http://www.financialstability.gov/docs/OTCletter.pdf.*

[9] The Exchange also notes that certain position limit, aggregation and exercise limit requirements continue to apply to FLEX Options in accordance with Rule 5.35 (Position Limits) and Rule 5.36. (Exercise Limits). The Commission notes that certain FLEX Options do not have position or exercise limits.

[10] 17 CFR 240.9b–1.

[11] 15 U.S.C. 78a *et seq.*

[12] *See supra* note 5.

[13] *See* Securities Exchange Act Release Nos. 66934 (May 7, 2012), 77 FR 27822 (May 11, 2012); 67624 (August 8, 2012), 77 FR 48580 (Aug 14, 2012), (SR–CBOE–2012–040).

[14] *See supra* note 13.

participants, both those trading in new a FLEX series, and those trading in an existing FLEX series, equal opportunity to tailor FLEX transactions and FLEX Quotes to meet their own investment objectives without being encumbered by a minimum value size. The Exchange does not believe that the difference between effecting a FLEX transaction in an existing series and effecting a FLEX transaction in a new series is material to the extent that there should be different minimum value sizes for the two types of transactions. In addition, the Exchange believes it would be consistent to apply the same minimum value size to closing transactions so that investors may elect to close just a portion of their FLEX position, without being subject to a minimum value size that may be greater than the equivalent value size necessary to meet their investment objectives. Lastly, the Exchange believes that it would be consistent to apply the same minimum value size to FLEX Quotes so that market participants may respond to an RFQ with the precise number of contracts or underlying equivalent value needed to trade with a submitting OTP Holder who has requested the RFQ.

As previously stated, the Exchange is submitting to the Commission a Report detailing the Exchange's experience with the Pilot Program. The Report is attached as Exhibit 3 to this filing. The Exchange notes that the Report includes data specific to the trade activity under present Rule 5.32(d)(2) and does not include data for transactions pursuant to subsections (3)–(4) dealing with opening transactions of less than 100 contracts in previously opened FLEX series, and closing transactions and responses to RFQs of less than 25 contracts, which the Exchange is also proposing to amend at this time. Based on the Exchange's internal review, the Exchange believes that these types of FLEX transactions, had they been part of the Exchange's Pilot Program, would be *de minimis* and does not believe that the absence of trade data specific to opening transactions of less than 100 contracts in previously opened FLEX series, or closing transactions and FLEX Quotes of less than 25 contracts would be material to the extent that the findings in the Report would fail to provide evidence supporting the elimination of specific contract and value sizes for all FLEX transactions.

For the foregoing reasons, the Exchange believes that the proposed changes to the minimum value size for FLEX transactions and FLEX Quotes are reasonable and appropriate, promote just and equitable principles of trade, and facilitate transactions in securities while continuing to foster the public interest and investor protection, and therefore should be adopted on a permanent basis.

The Exchange will continue to monitor the usage of FLEX Options and review whether changes need to be made to its Rules or the ODD to address any changes in retail FLEX Option participation or any other issues that may occur as a result of the elimination of the minimum value sizes on a permanent basis.

In conjunction with the above proposed changes, the Exchange is proposing certain non-substantive changes to reorganize the rule text. In particular, text from Rule 5.32(d)(1) pertaining to the maximum 15-year term for a FLEX Option would be relocated and renumbered as Rule 5.32(b)(6). As proposed, Rule 5.32(b)(6) would state that the maximum term for both equity and index FLEX Options shall be 15 years. In addition, the Exchange proposes to relocate the relevant text pertaining to the minimum value size for FLEX Options from Commentary .02 and renumber it as Rule 5.32(b)(7). As proposed, Rule 5.32(b)(7) would state that the minimum value size for all FLEX Options transaction shall be 1 contract. These changes are proposed simply to reorganize the rule text in light of the other changes being proposed. As noted above, the changes are not substantive.

2. Statutory Basis

The proposed rule change is consistent with Section 6(b) of the Act, in general, and furthers the objectives of Section 6(b)(5), in particular, in that it is designed to prevent fraudulent and manipulative acts and practices, to promote just and equitable principles of trade, to foster cooperation and coordination with persons engaged in facilitating transactions in securities, and to remove impediments to and perfect the mechanism of a free and open market and a national market system.

Specifically, the Exchange believes that the permanent approval of the Pilot Program, which eliminates minimum value size requirements for opening FLEX transactions in new FLEX series, would provide greater opportunities for investors to manage risk through the use of FLEX Options. Further, the Exchange notes that it has not experienced any adverse effects from the operation of the Pilot Program. The Exchange also believes that making the Pilot Program permanent does not raise any unique regulatory concerns.

The Exchange also believes that eliminating the minimum value size requirements for all FLEX transactions and FLEX Quotes, thus affording all market participants with an equal opportunity to tailor FLEX transactions and FLEX quotes to meet their own investment objectives without being encumbered by a minimum contract size, will help to remove impediments to and perfect the mechanism of a free and open market and a national market system. In addition, affording market participants on NYSE Amex Options [sic] the same investment tools available to their counterparts on the CBOE will foster cooperation and coordination with persons engaged in facilitating transactions in securities and will help to remove impediments to a free and open market and a national market system. The Exchange believes that adopting rules similar to those approved for and in use at the CBOE does not raise any unique regulatory concerns.

Lastly, the Exchange also believes that the proposed rule change, which provides all market participants, including public investors, with additional opportunities to trade customized options in an exchange environment and subject to exchange-based rules, is appropriate in the public interest and for the protection of investors.

B. Self-Regulatory Organization's Statement on Burden on Competition

The Exchange does not believe that the proposed rule change will impose any burden on competition that is not necessary or appropriate in furtherance of the purposes of the Act. Specifically, the proposal is structured to offer the same enhancement to all market participants, regardless of account type, and will not impose a competitive burden on any participant. The Exchange believes that adopting similar FLEX rules to those of the CBOE will allow NYSE Arca to more efficiently compete for FLEX Options orders. In addition, the Exchange believes that adopting the Pilot Program on a permanent basis will enable the Exchange to compete with the OTC market, in which similar restrictions on minimum value size do not apply.

C. Self-Regulatory Organization's Statement on Comments on the Proposed Rule Change Received From Members, Participants, or Others

No written comments were solicited or received with respect to the proposed rule change.

III. Date of Effectiveness of the Proposed Rule Change and Timing for Commission Action

Within 45 days of the date of publication of this notice in the **Federal Register** or within such longer period (i) as the Commission may designate up to 90 days of such date if it finds such longer period to be appropriate and publishes its reasons for so finding or (ii) as to which the self-regulatory organization consents, the Commission will:

(A) By order approve or disapprove the proposed rule change, or

(B) institute proceedings to determine whether the proposed rule change should be disapproved.

IV. Solicitation of Comments

Interested persons are invited to submit written data, views, and arguments concerning the foregoing, including whether the proposed rule change is consistent with the Act. Comments may be submitted by any of the following methods:

Electronic Comments

- Use the Commission's Internet comment form (*http://www.sec.gov/rules/sro.shtml*); or
- Send an email to *rule-comments@sec.gov*. Please include File Number SR–NYSEArca–2014–25 on the subject line.

Paper Comments

- Send paper comments in triplicate to Secretary, Securities and Exchange Commission, 100 F Street NE., Washington, DC 20549–1090.

All submissions should refer to File Number SR–NYSEArca-2014–25. This file number should be included on the subject line if email is used. To help the Commission process and review your comments more efficiently, please use only one method. The Commission will post all comments on the Commission's Internet Web site (*http://www.sec.gov/rules/sro.shtml*). Copies of the submission, all subsequent amendments, all written statements with respect to the proposed rule change that are filed with the Commission, and all written communications relating to the proposed rule change between the Commission and any person, other than those that may be withheld from the public in accordance with the provisions of 5 U.S.C. 552, will be available for Web site viewing and printing in the Commission's Public Reference Room, 100 F Street NE., Washington, DC 20549, on official business days between the hours of 10:00 a.m. and 3:00 p.m. Copies of the filing also will be available for inspection and copying at the principal office of the Exchange. All comments received will be posted without change; the Commission does not edit personal identifying information from submissions. You should submit only information that you wish to make available publicly. All submissions should refer to File Number SR–NYSEArca–2014–25 and should be submitted on or before April 28, 2014.

For the Commission, by the Division of Trading and Markets, pursuant to delegated authority.[15]

Kevin M. O'Neill,

Deputy Secretary.

[FR Doc. 2014–07636 Filed 4–4–14; 8:45 am]

BILLING CODE 8011–01–P

[15] 17 CFR 200.30–3(a)(12).

SECURITIES AND EXCHANGE COMMISSION

[Release No. 34–71842; File No. SR–CME–2014–12]

Self-Regulatory Organizations; Chicago Mercantile Exchange Inc.; Notice of Filing and Immediate Effectiveness of Proposed Rule Change Regarding Modifications to CME Rule 281H.02.A. Regarding CME's Cleared OTC U.S. Dollar/Indonesian Rupiah (USD/IDR) Spot, Forwards and Swaps Contracts

April 1, 2014.

Pursuant to Section 19(b)(1) of the Securities Exchange Act of 1934 (''Act'' or ''Exchange Act''),[1] and Rule 19b–4 thereunder,[2] notice is hereby given that on March 28, 2014, Chicago Mercantile Exchange Inc. (''CME'') filed with the Securities and Exchange Commission (''Commission'') the proposed rule change described in Items I, II and III below, which Items have been prepared primarily by CME. CME filed the proposal pursuant to Section 19(b)(3)(A) of the Act,[3] and Rule 19b–4(f)(4)(ii)[4] thereunder, so that the proposal was effective upon filing with the Commission. The Commission is publishing this notice to solicit comments on the proposed rule change from interested persons.

I. Self-Regulatory Organization's Statement of the Terms of Substance of the Proposed Rule Change

CME is filing proposed rule changes that are limited to its business as a derivatives clearing organization (''DCO''). More specifically, the proposed rule changes would amend certain aspects of CME Rule 281H.02.A. regarding CME's Cleared OTC U.S. Dollar/Indonesian Rupiah (USD/IDR) Spot, Forwards and Swaps contracts.

II. Self-Regulatory Organization's Statement of the Purpose of, and Statutory Basis for, the Proposed Rule Change

In its filing with the Commission, CME included statements concerning the purpose and basis for the proposed rule change and discussed any comments it received on the proposed rule change. The text of these statements may be examined at the places specified in Item IV below. CME has prepared summaries, set forth in sections A, B, and C below, of the most significant aspects of such statements.

A. Self-Regulatory Organization's Statement of the Purpose of, and Statutory Basis for, the Proposed Rule Change

CME is registered as a DCO with the Commodity Futures Trading Commission and offers clearing services for many different futures and swaps products. The proposed rule changes that are the subject of this filing are limited to CME's business as a DCO offering clearing services for CFTC-regulated swaps products.

The proposed rule changes amend CME Rule 281H.02.A., which deals with CME's Cleared OTC U.S. Dollar/Indonesian Rupiah (USD/IDR) Spot, Forwards and Swaps contracts. These contracts are non-deliverable foreign currency forward contracts and, as such, are considered to be ''swaps'' under applicable regulatory definitions.[5]

CME specifically seeks to amend the Day of Cash Settlement rule for the cleared only USD/IDR contracts since the internationally accepted benchmark fixing that underlies these contracts will be amended effective March 28, 2014. The fixing for the USD/IDR contract is moving onshore to Bank Indonesia (i.e., the Central Bank of Indonesia). These changes will be effective upon filing.

The changes that are described in this filing are limited to CME's business as a DCO clearing products under the exclusive jurisdiction of the CFTC and do not materially impact CME's security-based swap clearing business in any way. CME notes that it has also

[1] 15 U.S.C. 78s(b)(1).

[2] 17 CFR 240.19b–4.

[3] 15 U.S.C. 78s(b)(3)(A).

[4] 17 CFR 240.19b–4(f)(4)(ii).

[5] *See* Commodity Futures Trading Commission and Securities and Exchange Commission Joint Final Rule Defining ''Swap,'' ''Security-Based Swap,'' and ''Security-Based Swap Agreement;'' Mixed Swaps; Security-Based Swap Agreement Recordkeeping; Final Rule, 77 FR 48207, 48255 (August 13, 2012).

certified the proposed rule changes that are the subject of this filing to its primary regulator, the Commodity Futures Trading Commission (''CFTC''), in a separate filing, CME Submission No. 14–091R.

CME believes the proposed rule changes are consistent with the requirements of the Exchange Act including Section 17A of the Exchange Act.[6] CME is amending the CME Rulebook so that the Day of Cash Settlement rule for CME's cleared only USD/IDR contracts conforms with the internationally accepted benchmark fixing that occurs at 10:00 a.m. Jakarta time and will therefore facilitate CME's settlement process. The proposed changes are intended to enhance CME's ability to complete settlements on a timely basis under varying circumstances and as such are designed to promote the prompt and accurate clearance and settlement of securities transactions and, to the extent applicable, derivatives agreements, contracts, and transactions, to assure the safeguarding of securities and funds which are in the custody or control of the clearing agency or for which it is responsible, and, in general, to protect investors and the public interest consistent with Section 17A(b)(3)(F) of the Exchange Act.[7]

Furthermore, the proposed changes are limited in their effect to products offered under CME's authority to act as a DCO. The products that are the subject of this filing are under the exclusive jurisdiction of the CFTC. As such, the proposed CME changes are limited to CME's activities as a DCO clearing swaps that are not security-based swaps and forwards that are not security forwards; CME notes that the policies of the CFTC with respect to administering the Commodity Exchange Act are comparable to a number of the policies underlying the Exchange Act, such as promoting market transparency for over-the-counter derivatives markets, promoting the prompt and accurate clearance of transactions and protecting investors and the public interest.

Because the proposed changes are limited in their effect to OTC FX products offered under CME's authority to act as a DCO, the proposed changes are properly classified as effecting a change in an existing service of CME that:

(a) Primarily affects the clearing operations of CME with respect to products that are not securities, including futures that are not security futures, swaps that are not security-based swaps or mixed swaps; and forwards that are not security forwards; and

(b) does not significantly affect any securities clearing operations of CME or any rights or obligations of CME with respect to securities clearing or persons using such securities-clearing service.

As such, the changes are therefore consistent with the requirements of Section 17A of the Exchange Act[8] and are properly filed under Section 19(b)(3)(A)[9] and Rule 19b–4(f)(4)(ii)[10] thereunder.

B. Self-Regulatory Organization's Statement on Burden on Competition

CME does not believe that the proposed rule change will have any impact, or impose any burden, on competition. The proposed changes conform CME's OTC FX rulebook with internationally accepted benchmarks for the purpose of enhancing CME's ability to complete settlements on a timely basis under varying circumstances

C. Self-Regulatory Organization's Statement on Comments on the Proposed Rule Change Received From Members, Participants, or Others

CME has not solicited, and does not intend to solicit, comments regarding this proposed rule change. CME has not received any unsolicited written comments from interested parties.

III. Date of Effectiveness of the Proposed Rule Change and Timing for Commission Action

The foregoing rule change has become effective upon filing pursuant to Section 19(b)(3)(A)[11] of the Act and paragraph (f)(4)(ii) of Rule 19b–4[12] thereunder. At any time within 60 days of the filing of the proposed rule change, the Commission summarily may temporarily suspend such rule change if it appears to the Commission that such action is necessary or appropriate in the public interest, for the protection of investors, or otherwise in furtherance of the purposes of the Act.

IV. Solicitation of Comments

Interested persons are invited to submit written data, views and arguments concerning the foregoing, including whether the proposed rule change is consistent with the Act. Comments may be submitted by any of the following methods:

Electronic Comments

- Use the Commission's Internet comment form (*http://www.sec.gov/rules/sro.shtml*), or
- Send an email to *rule-comments@sec.gov.* Please include File No. SR–CME–2014–12 on the subject line.

Paper Comments

- Send paper comments in triplicate to Secretary, Securities and Exchange Commission, 100 F Street NE., Washington, DC, 20549–1090.

All submissions should refer to File Number SR–CME–2014–12. This file number should be included on the subject line if email is used. To help the Commission process and review your comments more efficiently, please use only one method. The Commission will post all comments on the Commission's Internet Web site (*http://www.sec.gov/rules/sro.shtml*). Copies of the submission, all subsequent amendments, all written statements with respect to the proposed rule change that are filed with the Commission, and all written communications relating to the proposed rule change between the Commission and any person, other than those that may be withheld from the public in accordance with the provisions of 5 U.S.C. 552, will be available for Web site viewing and printing in the Commission's Public Reference Room, 100 F Street NE., Washington, DC 20549, on official business days between the hours or 10:00 a.m. and 3:00 p.m. Copies of such filing also will be available for inspection and copying at the principal office of CME and on CME's Web site at *http://www.cmegroup.com/market-regulation/rule-filings.html.*

All comments received will be posted without change; the Commission does not edit personal identifying information from submissions. You should submit only information that you wish to make available publicly.

All submissions should refer to File Number SR–CME–2014–12 and should be submitted on or before April 28, 2014.

For the Commission, by the Division of Trading and Markets, pursuant to delegated authority.[13]

Kevin M. O'Neill,

Deputy Secretary.

[FR Doc. 2014–07639 Filed 4–4–14; 8:45 am]

BILLING CODE 8011–01–P

[6] 15 U.S.C. 78q–1.

[7] 15 U.S.C. 78q–1(b)(3)(F).

[8] 15 U.S.C. 78q–1.

[9] 15 U.S.C. 78s(b)(3)(A).

[10] 17 CFR 240.19b–4(f)(4)(ii).

[11] 15 U.S.C. 78s(b)(3)(A).

[12] 17 CFR 240.19b–4(f)(4)(ii).

[13] 17 CFR 200.30–3(a)(12).

SECURITIES AND EXCHANGE COMMISSION

[Release No. 34–71844; File No. SR–NYSEMKT–2014–26]

Self-Regulatory Organizations; NYSE MKT LLC; Notice of Filing and Immediate Effectiveness of Proposed Rule Change Amending Its Option Trading Rules To Extend the Operation of Its Pilot Program Regarding Minimum Value Sizes for Opening Transactions in New Series of Flexible Exchange Options

April 1, 2014.

Pursuant to Section 19(b)(1) [1] of the Securities Exchange Act of 1934 (the ''Act'') [2] and Rule 19b–4 thereunder,[3] notice is hereby given that, on March 27, 2014, NYSE MKT LLC (the ''Exchange'' or ''NYSE MKT'') filed with the Securities and Exchange Commission (the ''Commission'') the proposed rule change as described in Items I and II below, which Items have been prepared by the self-regulatory organization. The Commission is publishing this notice to solicit comments on the proposed rule change from interested persons.

I. Self-Regulatory Organization's Statement of the Terms of Substance of the Proposed Rule Change

The Exchange proposes to amend its option trading rules to extend the operation of its pilot program (''Pilot Program'') regarding minimum value sizes for flexible exchange options (''FLEX Options'' or ''FLEX''), currently scheduled to expire on March 31, 2014 until the earlier of July 31, 2014 or approval of the Exchange's proposal to adopt the Pilot Program on a permanent basis. The text of the proposed rule change is available on the Exchange's Web site at *www.nyse.com,* at the principal office of the Exchange, and at the Commission's Public Reference Room.

II. Self-Regulatory Organization's Statement of the Purpose of, and Statutory Basis for, the Proposed Rule Change

In its filing with the Commission, the self-regulatory organization included statements concerning the purpose of, and basis for, the proposed rule change and discussed any comments it received on the proposed rule change. The text of those statements may be examined at the places specified in Item IV below. The Exchange has prepared summaries, set forth in sections A, B, and C below, of the most significant parts of such statements.

A. Self-Regulatory Organization's Statement of the Purpose of, and Statutory Basis for, the Proposed Rule Change

1. Purpose

The Exchange hereby proposes to amend its option trading rules to extend the operation of its Pilot Program regarding minimum value sizes for opening transactions in new FLEX series, currently scheduled to expire on March 31, 2014,[4] until July 31, 2014. The Exchange has submitted a separate filing to the Commission proposing to adopt the existing Pilot Program on a permanent basis.[5] The Exchange is submitting this proposed four-month extension of the Pilot Program so that the program may continue to operate uninterrupted while the Commission considers the Exchange's proposed adoption of the Pilot Program on a permanent basis. Accordingly, the proposed extension to the Pilot Program will end the earlier of July 31, 2014 or approval of the Exchange's proposal to adopt the Pilot Program on a permanent basis.

This filing does not propose any substantive changes to the Pilot Program and contemplates that all other terms of FLEX Options will remain the same. Overall, the Exchange believes that extending the Pilot Program will benefit public customers and other market participants who will be able to use FLEX Options to manage risk for smaller portfolios. In support of the proposed extension of the Pilot Program, and as required by the terms of the Pilot Program's implementation,[6] the Exchange has submitted to the Commission a Pilot Program Report that provides an analysis of the Pilot Program covering the period during which the Pilot Program has been in effect. This Pilot Program Report includes (i) data and analysis on the open interest and trading volume in (a) FLEX Equity Options in new series that have opening transactions with a minimum size of 0 to 249 contracts and less than $1 million in underlying value; (b) FLEX Index Options in new series that have opening transactions with a minimum opening size of less than $10 million in underlying equivalent value; and (ii) analysis on the types of investors that initiated opening FLEX Equity and Index Options transactions in new series (*i.e.,* institutional, high net worth, or retail). The report has been submitted to the Commission as Exhibit 3 to SR–NYSEMKT–2013–21 [7] [sic].

The Exchange believes that there is sufficient investor interest and demand in the Pilot Program to warrant extension for another four months. The Exchange believes that the Pilot Program has provided investors with additional means of managing their risk exposures and carrying out their investment objectives. The Exchange has not experienced any adverse market effects with respect to the Pilot Program.

In the event the Exchange does not receive approval to adopt the Pilot Program on a permanent basis by July 31, 2014 and proposes an additional extension of the Pilot Program, the Exchange will submit, along with any filing proposing such amendments to the Pilot Program, an additional Pilot Program Report covering the period during which the Pilot Program was in effect and including the details referenced above, along with the nominal dollar value of the underlying security of each trade. The Pilot Program Report would be submitted to the Commission at least one month prior to the expiration date of the Pilot Program.

The Exchange notes that any positions established under this Pilot Program would not be impacted by the expiration of the Pilot Program. For example, a 10-contract FLEX Equity Option opening position that overlies less than $1 million in the underlying security and expires in January 2016 could be established during the Pilot Program. If the Pilot Program were not extended or adopted on a permanent basis, the position would continue to exist and any further trading in the series would be subject to the minimum value size requirements for continued trading in that series.

The Exchange believes that the Pilot Program has been successful and well-received by its membership and the investing public for the period that it has been in operation as a Pilot Program.[8]

2. Statutory Basis

The proposed rule change is consistent with Section 6(b) of the Act,[9]

[1] 15 U.S.C. 78s(b)(1).

[2] 15 U.S.C. 78a.

[3] 17 CFR 240.19b–4.

[4] *See* Securities Exchange Act Release No. 69255 (March 28, 2013), 78 FR 20158 (April 3, 2013) (SR–NYSEMKT–2013–28).

[5] SR–NYSEMKT–2014–21 requesting permanent adoption of the Pilot Program was submitted to the Commission on March 17 [sic], 2014.

[6] *See infra* note 7 [sic].

[7] *Supra* note 5.

[8] The Pilot Program was initiated on May 12, 2010. *See* Securities Exchange Act Release No. 62084 (May 12, 2010), 75 FR 28091 (May 19, 2010) (SR–NYSEAmex–2010–40).

[9] 15 U.S.C. 78f(b).

in general, and furthers the objectives of Section 6(b)(5),[10] in particular, in that it is designed to prevent fraudulent and manipulative acts and practices, to promote just and equitable principles of trade, to foster cooperation and coordination with persons engaged in facilitating transactions in securities, and to remove impediments to and perfect the mechanism of a free and open market and a national market system. Specifically, the Exchange believes that the proposed extension of the Pilot Program, which eliminates the minimum value size applicable to opening transactions in new series of FLEX Options, would provide greater opportunities for investors to manage risk through the use of FLEX Options. Further, the Exchange notes that it has not experienced any adverse effects from the operation of the Pilot Program. The Exchange further notes that extending the Pilot Program for an additional four months will remove impediments to and perfect the mechanism of a free and open market because it will enable the Pilot Program to continue uninterrupted pending review of the Exchange's rule proposal to adopt the Pilot Program on a permanent basis.

B. Self-Regulatory Organization's Statement on Burden on Competition

The Exchange does not believe that the proposed rule change will impose any burden on competition that is not necessary or appropriate in furtherance of the purposes of the Act. The proposed change is being made to extend the operation of the Pilot Program to allow adequate time for the Commission to consider the Exchange's proposal to permanently adopt the elimination of the existing minimum value size applicable to opening transactions in new FLEX series. Other competing options exchanges have rules that do not impose minimum value size requirements for opening transactions in new FLEX series.[11] Thus, the proposed changes will not impose any burden on competition while providing that the elimination of the minimum value size requirements for opening transactions in new FLEX series continues without interruption until such time that permanent approval is granted by the Commission.

[10] 15 U.S.C. 78f(b)(5).

[11] *See* Chicago Board Options Exchange Rule 24A.4.

C. Self-Regulatory Organization's Statement on Comments on the Proposed Rule Change Received From Members, Participants, or Others

No written comments were solicited or received with respect to the proposed rule change.

III. Date of Effectiveness of the Proposed Rule Change and Timing for Commission Action

The Exchange has filed the proposed rule change pursuant to Section 19(b)(3)(A)(iii) of the Act [12] and Rule 19b–4(f)(6) thereunder.[13] Because the proposed rule change does not: (i) Significantly affect the protection of investors or the public interest; (ii) impose any significant burden on competition; and (iii) become operative prior to 30 days from the date on which it was filed, or such shorter time as the Commission may designate, if consistent with the protection of investors and the public interest, the proposed rule change has become effective pursuant to Section 19(b)(3)(A) of the Act [14] and Rule 19b–4(f)(6) thereunder.[15]

A proposed rule change filed under Rule 19b–4(f)(6) [16] normally does not become operative prior to 30 days after the date of the filing. However, pursuant to Rule 19b–4(f)(6)(iii),[17] the Commission may designate a shorter time if such action is consistent with the protection of investors and the public interest. The Exchange has asked the Commission to waive the 30-day operative delay so that the proposal may become operative immediately upon filing. The Commission notes that waiving the 30-day operative delay would allow the Pilot Program to continue without interruption while the Commission considers the Exchange's proposal to permanently adopt the Pilot Program, and believes that waiving the 30-day operative delay is consistent with the protection of investors and the public interest.[18] Therefore, the Commission hereby waives the 30-day operative delay and designates the proposal operative upon filing.

[12] 15 U.S.C. 78s(b)(3)(A)(iii).

[13] 17 CFR 240.19b–4(f)(6).

[14] 15 U.S.C. 78s(b)(3)(A).

[15] 17 CFR 240.19b–4(f)(6). In addition, Rule 19b–4(f)(6) requires a self-regulatory organization to give the Commission written notice of its intent to file the proposed rule change, along with a brief description and text of the proposed rule change, at least five business days prior to the date of filing of the proposed rule change, or such shorter time as designated by the Commission. The Exchange has satisfied this requirement.

[16] 17 CFR 240.19b–4(f)(6).

[17] 17 CFR 240.19b–4(f)(6)(iii).

[18] For purposes only of waiving the 30-day operative delay, the Commission has considered the proposed rule's impact on efficiency, competition, and capital formation. *See* 15 U.S.C. 78c(f).

At any time within 60 days of the filing of the proposed rule change, the Commission summarily may temporarily suspend such rule change if it appears to the Commission that such action is necessary or appropriate in the public interest, for the protection of investors, or otherwise in furtherance of the purposes of the Act. If the Commission takes such action, the Commission shall institute proceedings under Section 19(b)(2)(B) of the Act [19] to determine whether the proposed rule change should be approved or disapproved.

IV. Solicitation of Comments

Interested persons are invited to submit written data, views, and arguments concerning the foregoing, including whether the proposed rule change is consistent with the Act. Comments may be submitted by any of the following methods:

Electronic Comments

- Use the Commission's Internet comment form (*http://www.sec.gov/rules/sro.shtml);* or
- Send an email to *rule-comments@sec.gov.* Please include File Number SR–NYSEMKT–2014–26 on the subject line.

Paper Comments

- Send paper comments in triplicate to Secretary, Securities and Exchange Commission, 100 F Street NE., Washington, DC 20549–1090.

All submissions should refer to File Number SR–NYSEMKT–2014–26. This file number should be included on the subject line if email is used. To help the Commission process and review your comments more efficiently, please use only one method. The Commission will post all comments on the Commission's Internet Web site (*http://www.sec.gov/rules/sro.shtml).* Copies of the submission, all subsequent amendments, all written statements with respect to the proposed rule change that are filed with the Commission, and all written communications relating to the proposed rule change between the Commission and any person, other than those that may be withheld from the public in accordance with the provisions of 5 U.S.C. 552, will be available for Web site viewing and printing in the Commission's Public Reference Room, 100 F Street, NE., Washington, DC 20549, on official business days between the hours of 10:00 a.m. and 3:00 p.m. Copies of the

[19] 15 U.S.C. 78s(b)(2)(B).

filing also will be available for inspection and copying at the principal office of the Exchange. All comments received will be posted without change; the Commission does not edit personal identifying information from submissions. You should submit only information that you wish to make available publicly. All submissions should refer to File Number SR–NYSEMKT–2014–26 and should be submitted on or before April 28, 2014.

For the Commission, by the Division of Trading and Markets, pursuant to delegated authority.[20]

Kevin M. O'Neill,

Deputy Secretary.

[FR Doc. 2014–07641 Filed 4–4–14; 8:45 am]

BILLING CODE 8011–01–P

SECURITIES AND EXCHANGE COMMISSION

[Release No. 34–71840; File No. SR–NYSEMKT–2014–21]

Self-Regulatory Organizations; NYSE MKT LLC; Notice of Filing of Proposed Rule Change To Make Permanent Its Pilot Program Regarding Minimum Value Sizes for Opening Transactions in Flexible Exchange Options and Establish New Minimum Value Sizes Applicable to Other FLEX Transactions and FLEX Quotes

April 1, 2014.

Pursuant to Section 19(b)(1)[1] of the Securities Exchange Act of 1934 (the ''Act'')[2] and Rule 19b-4 thereunder,[3] notice is hereby given that, on March 18, 2014, NYSE MKT LLC. (the ''Exchange'' or ''NYSE MKT'') filed with the Securities and Exchange Commission (the ''Commission'') the proposed rule change as described in Items I, II, and III below, which Items have been prepared by the self-regulatory organization. The Commission is publishing this notice to solicit comments on the proposed rule change from interested persons.

I. Self-Regulatory Organization's Statement of the Terms of Substance of the Proposed Rule Change

The Exchange proposes to make permanent its pilot program (''Pilot Program'') regarding minimum value [sic] scheduled to expire on March 31, 2014, and to establish new minimum value sizes applicable to other FLEX transactions and FLEX [sic]. The text of the proposed rule change is available on the Exchange's Web site at *www.nyse.com,* at the principal office of the Exchange, and at the Commission's Public Reference Room.

II. Self-Regulatory Organization's Statement of the Purpose of, and Statutory Basis for, the Proposed Rule Change

In its filing with the Commission, the self-regulatory organization included statements concerning the purpose of, and basis for, the proposed rule change and discussed any comments it received on the proposed rule change. The text of those statements may be examined at the places specified in Item IV below. The Exchange has prepared summaries, set forth in sections A, B, and C below, of the most significant parts of such statements.

A. Self-Regulatory Organization's Statement of the Purpose of, and Statutory Basis for, the Proposed Rule Change

1. Purpose

The Exchange proposes to make permanent its Pilot Program regarding minimum value sizes for FLEX Options,[4] currently scheduled to expire on March 31, 2014.[5] The Exchange believes that the Pilot Program has been successful and well-received by its membership and the investing public for the period that it has been in operation as a Pilot Program.[6]

Minimum Value Sizes for FLEX Options

Prior to the initiation of the Pilot Program, the minimum value size requirement for every FLEX Request for Quotes and every responsive FLEX Quote [sic] under Rule 903G(a)(4)(ii) was as follows:

- For an opening transaction (other than FLEX Quotes responsive to a FLEX Request for Quotes) in any FLEX series in which there is no open interest at the time the Request for Quotes is submitted, the minimum value size was, (i) for FLEX Equity Options, the lesser of 250 contracts or the number of contracts overlying $1 million in the underlying securities; and (ii) for FLEX Index Options, $10 million Underlying Equivalent Value in the case of Broad Stock Index Group FLEX Index Options and $5 million Underlying Equivalent Value in the case of Stock Index Industry Group FLEX Index Options. Under a prior pilot program (which was superseded by the minimum value size Pilot Program), the ''250 contracts'' component above had been reduced to ''150 contracts.''[7]

Pursuant to the Pilot Program, notwithstanding the above-described rule text, the minimum size for an opening transaction in a new FLEX series is one contract. As mentioned above, the minimum value size Pilot Program is currently set to expire on March 31, 2014.

In addition to the minimum value size applicable to opening FLEX transactions in new series, as described above, Rule 903(G)(a)(iii)–(iv) prescribes minimum value sizes for other FLEX transactions and FLEX Quotes as follows:

- For a transaction in any currently-opened FLEX series, the minimum value size is (i) for FLEX Equity Options, the lesser of 100 contracts or the number of contracts overlying $1 million in the underlying securities in the case of opening transactions, and 25 contracts in the case of closing transactions; and (ii) for FLEX Index Options, $1 million Underlying Equivalent Value in the case of both opening and closing transactions; or (iii) for either case, the remaining underlying size or Underlying Equivalent Value on a closing transaction, whichever is less.
- The minimum value size for FLEX Quotes responsive to a Request for Quotes is 25 contracts in the case of FLEX Equity Options and $1 million Underlying Equivalent Value in the case of FLEX Index Options or for either case the remaining underlying size or Underlying Equivalent Value on a closing transaction, whichever is less.

Proposal

The Exchange is proposing to make the Pilot Program permanent. To accomplish this change, the Exchange is proposing to eliminate the rule text describing the Pilot Program, which is contained in Commentary .01 to Rule 903G, and to eliminate the rule text describing the pre-Pilot Program minimum value size requirements, which is contained in Rule 903G(a)(4).

[20] 17 CFR 200.30–3(a)(12).

[1] 15 U.S.C. 78s(b)(1).

[2] 15 U.S.C. 78a.

[3] 17 CFR 240.19b-4.

[4] FLEX Options provide investors with the ability to customize basic option features including size, expiration date, exercise style, and certain exercise prices. FLEX Options can be FLEX Index Options or FLEX Equity Options. The trading of FLEX Options is governed by NYSE MKT Rules 900G–909G.

[5] *See* Securities Exchange Act Release No. 69255 (March 28, 2013), 78 FR 20158 (April 3, 2013) (SR–NYSEMKT–2013–28).

[6] The Pilot Program was initiated on May 12, 2010. *See* Securities Exchange Act Release No. 62084 (May 12, 2010), 75 FR 28091 (May 19, 2010) (SR–NYSEAmex–2010–40).

[7] *See* Securities Exchange Act Release No. 58037 (June 26, 2008), 73 FR 38008 (July 2, 2008) (SR–Amex–2008–50) (approval of rule change that, among other things, established a pilot program that reduced the minimum number of contracts required for a FLEX Equity Option opening transaction in a new series).

In support of approving the Pilot Program on a permanent basis, and as required by the Pilot Program's approval order, the Exchange is submitting to the Commission a Pilot Program report (''Report''), which is a public report detailing the Exchange's experience with the program.[8] Specifically, the Exchange is providing the Commission an annual report, containing data and analysis of underlying equivalent values, open interest and trading volume, and analysis of the types of investors that initiated opening FLEX Equity and Index Options transactions (*i.e.,* institutional, high net worth, or retail) in new FLEX series.

The Exchange believes that there is sufficient investor interest and demand in the Pilot Program to warrant its permanent approval. The Exchange believes that, for the period that the Pilot Program has been in operation, it has provided investors with additional means of managing their risk exposures and carrying out their investment objectives. Furthermore, as discussed in more detail below, the Exchange has not experienced any adverse market effects with respect to the Pilot Program.

The Exchange believes that eliminating the minimum value size requirements for opening transactions in new FLEX series on a permanent basis is important and necessary to the Exchange's efforts to create a product and market that provide its membership and investors interested in FLEX-type options with an improved but comparable alternative to the over-the-counter (''OTC'') market in customized options, which can take on contract characteristics similar to FLEX Options but are not subject to the same restrictions. By making the Pilot Program permanent, market participants would continue to have greater flexibility in determining whether to execute their customized options in an exchange environment or in the OTC market. The Exchange believes that market participants would benefit from being able to trade these customized options in an exchange environment in several ways, including, but not limited to, the following: (i) Enhanced efficiency in initiating and closing out positions; (ii) increased market transparency; and (iii) heightened contra-party creditworthiness due to the role of The Options Clearing Corporation (''OCC'') as issuer and guarantor of FLEX Options. The Exchange also believes that the Pilot Program is wholly consistent with comments by then Secretary of the Treasury Timothy F. Geithner, to the U.S. Senate. In particular, Secretary Geithner stated that:

> Market efficiency and price transparency should be improved in derivatives markets by requiring the clearing of standardized contracts through regulated [central counterparties] and by moving the standardized part of these markets onto regulated exchanges and regulated transparent electronic trade execution systems for OTC derivatives and by requiring development of a system for timely reporting of trades and prompt dissemination of prices and other trade information. Furthermore, regulated financial institutions should be encouraged to make greater use of regulated exchange-traded derivatives. Competition between appropriately regulated OTC derivatives markets and regulated exchanges will make both sets of markets more efficient and thereby better serve end-users of derivatives.[9]

The Exchange believes that the elimination of the minimum value size requirements for opening transactions in new FLEX series on a permanent basis would provide FLEX-participating ATP Holders with greater flexibility in structuring the terms of FLEX Options that best comports with their and their customers' particular needs. In this regard, the Exchange notes that the minimum value size requirements for opening transactions in new FLEX series were originally put in place to limit participation in FLEX Options to sophisticated, high net worth investors rather than retail investors.[10] However, the Exchange believes that the restriction is no longer necessary and is overly restrictive. The Exchange has also not experienced any adverse market effects with respect to the Pilot Program eliminating the minimum value size requirements for opening transactions in new FLEX series. Again, based on the Exchange's experience to date and throughout the Pilot Program period, the minimum value size requirements are too large to accommodate the needs of ATP Holders and their customers—who may be institutional, high net worth or retail—that currently participate in the OTC market. In this regard, the Exchange notes that, prior to establishing the Pilot Program, it received numerous requests from broker-dealers representing institutional, high net worth and retail investors indicating that the minimum value size requirements prevented them from bringing transactions that are already taking place in the OTC market to an exchange environment. The Exchange believes that eliminating the minimum value size requirements for opening transactions in new FLEX series on a permanent basis would further broaden the base of investors that use FLEX Options to manage their trading and investment risk, including investors that currently trade in the OTC market for customized options, where similar size restrictions do not apply. The Exchange also believes that this may open up FLEX Options to more retail investors. The Exchange does not believe that this raises any unique regulatory concerns because existing safeguards—such as certain position limit, exercise limit, and reporting requirements—continue to apply.[11] In addition, the Exchange notes that FLEX Options are subject to the options disclosure document (''ODD'') requirements of Rule 9b–1[12] under the Securities Exchange Act of 1934 (the ''Act'').[13] No broker or dealer can accept an order from a customer to purchase or sell an option contract relating to an options class that is the subject of a definitive ODD (including FLEX Options), or approve the customer's account for the trading of such an option, unless the broker or dealer furnishes or has furnished to the customer a copy of the definitive ODD. The ODD contains a description, special features, and special risks of FLEX Options. Lastly, similar to any other options, FLEX Options are subject to ATP Holder organization supervision and suitability requirements, such as in Rules 922 (Supervision of Accounts) and 923 (Suitability).

In proposing the Pilot Program itself and in now proposing to make it permanent, the Exchange is cognizant of the need for market participants to have substantial options transaction capacity and flexibility to hedge their substantial investment portfolios, on the one hand, and the potential for adverse effects that the minimum value size restrictions were originally designed to address, on the other. However, the Exchange has not experienced any adverse market effects with respect to the Pilot Program. The Exchange is also cognizant of the OTC market, in which similar restrictions on minimum value size do not apply. In light of these

[8] A copy of the Report has been attached as Exhibit 3 to this filing.

[9] See letter from Secretary Geithner to the Honorable Harry Reid, United States Senate (May 13, 2009), located at *http://www.financialstability.gov/docs/OTCletter.pdf.*

[10] *See* Securities Exchange Act Release No. 37336 (June 19, 1996), 61 FR 33558 (June 27, 1996) (SR–Amex–95–57).

[11] The Exchange also notes that certain position limit, aggregation and exercise limit requirements continue to apply to FLEX Options in accordance with Rules 906G (Position Limits) and 907G (Exercise Limits). The Commission notes that certain FLEX Options do not have position or exercise limits.

[12] 17 CFR 240.9b–1.

[13] 15 U.S.C. 78a et seq.

considerations and Secretary Geithner's comments on moving the standardized parts of OTC contracts onto regulated exchanges, the Exchange believes that making the Pilot Program permanent is appropriate and reasonable and will provide market participants with additional flexibility in determining whether to execute their customized options in an exchange environment or in the OTC market. The Exchange believes that market participants benefit from being able to trade these customized options in an exchange environment in several ways, including, but not limited to, enhanced efficiency in initiating and closing out positions, increased market transparency, and heightened contra-party creditworthiness due to the role of OCC as issuer and guarantor of FLEX Options.

Pursuant to this filing, the Exchange proposes to adopt the existing Pilot Program,[14] on a permanent basis. Specifically, the Exchange proposes to eliminate all references to minimum size applicable to opening transactions in new FLEX series as presently described in Rule 903G(a)(4)(ii). The proposal to eliminate the minimum value size applicable to opening transactions in new FLEX series is similar to a rule change by the CBOE when adopting their Pilot Program on a permanent basis.[15]

Present Rules 903G(a)(4)(iii)(A)–(B) govern the minimum value size for FLEX Equity and FLEX Index Options transactions in currently opened FLEX series. Subsection (A) states that the minimum value size for FLEX Equity Options shall be the lesser of 100 contracts or the number of contracts overlying $1 million in the underlying securities in the case of opening transactions, and 25 contracts in the case of closing transactions. Subsection (B) states for FLEX Index Options, the minimum value size shall be $1 million Underlying Equivalent Value in the case of both opening and closing transactions. Additionally, Rule 903G(a)(4)(iv) states that the minimum value size for FLEX Quotes responsive to a Request for Quotes (''RFQ'') shall be 25 contracts in the case of FLEX Equity Options and $1 million Underlying Equivalent Value in the case of FLEX Index Options, or for either case the remaining underlying size or Underlying Equivalent Value on a closing transaction, whichever is less. The Exchange now proposes to adopt a minimum value size of one contract when opening and closing any Equity or Index FLEX Options transaction in previously opened FLEX series and for responses to Requests for Quotes. This change, coupled with the proposed change to the minimum value size for opening transaction in new FLEX series (described above) will effectively establish a one contract minimum value size for all FLEX transactions and FLEX Quotes. A one contract minimum value size for all FLEX Options transactions and FLEX Quotes is based on similar rules governing minimum value size for FLEX Options approved for the CBOE.[16]

Adopting the same minimum value size for all FLEX transactions and FLEX Quotes would afford market participants, both those trading in new a FLEX series, and those trading in an existing FLEX series, equal opportunity to tailor FLEX transactions to meet their own investment objectives without being encumbered by a minimum value size. The Exchange does not believe that the difference between effecting a FLEX transaction in an existing series and effecting a FLEX transaction in a new series is material to the extent that there should be different minimum value sizes for the two types of transactions. In addition, the Exchange believes it would be consistent to apply the same minimum value size to closing transactions so that investors may elect to close just a portion of their FLEX position, without being subject to a minimum value size that may be greater than the equivalent value size necessary to meet their investment objectives. Lastly, the Exchange believes that it would be consistent to apply the same minimum value size to FLEX Quotes so that market participants may respond to an RFQ with the precise number of contracts or underlying equivalent value needed to trade with a submitting OTP Holder who has requested the RFQ.

As previously stated the Exchange is submitting to the Commission a Report detailing the Exchange's experience with the Pilot Program. The Report is attached as Exhibit 3 to this filing. The Exchange notes that the Report includes data specific to the trade activity under Rule 903G(a)(4)(ii) and does not include data pursuant to subsections (iii)-(iv) dealing with opening transactions of less than 100 contracts in previously opened FLEX series, and closing transactions and responses to RFQs of less than 25 contracts, which the Exchange is proposing to amend at this time. Based on the Exchange's internal review, the Exchange believes that these types of FLEX transactions, had they been part of the Pilot Program, would be *de minimis* and does not believe that the absence of trade data specific to opening transactions of less than 100 contracts in previously opened FLEX series, or closing transactions and responses to RFQs of less than 25 contracts would be material to the extent that the findings in the Report would fail to provide evidence supporting the elimination of specific contract and value sizes for all FLEX transactions.

For the foregoing reasons, the Exchange believes that the proposed changes to the minimum value size for FLEX transactions and FLEX Quotes are reasonable and appropriate, promote just and equitable principles of trade, and facilitate transactions in securities while continuing to foster the public interest and investor protection.

The Exchange will continue to monitor the usage of FLEX Options and review whether changes need to be made to its Rules or the ODD to address any changes in retail FLEX Option participation or any other issues that may occur as a result of the elimination of the minimum value sizes on FLEX transactions.

In conjunction with these changes, the Exchange is proposing certain non-substantive changes to reorganize the rule text. In particular, text from Rule 903G(a)(4)(i) pertaining to the maximum 15-year term for a FLEX Option would be relocated and renumbered as Rule 903G(a)(2)(vi), [sic] As proposed, Rule 903G(a)(2)(vi) would state that the maximum term for both equity and index FLEX Options shall be 15 years [sic] In addition, the Exchange proposes to relocate relevant text pertaining to the minimum value size for FLEX Options from Commentary .02 and renumber it as Rule 903G(a)(2)(vii). As proposed, Rule 903G(a)(2)(vii) would state that the minimum value size for all FLEX Equity and FLEX Index Options transactions shall be 1 contract. The Exchange proposes renumbering present Commentary .02 as Commentary .01. These changes are proposed simply to reorganize the rule text in light of the other changes being proposed. As noted above, the changes are not substantive.

2. Statutory Basis

The proposed rule change is consistent with Section 6(b) of the Act, in general, and furthers the objectives of Section 6(b)(5), in particular, in that it is designed to prevent fraudulent and manipulative acts and practices, to promote just and equitable principles of trade, to foster cooperation and coordination with persons engaged in facilitating transactions in securities,

[14] *See supra* note 5.

[15] *See* Securities Exchange Act Release Nos. 66934 (May 7, 2012), 77 FR 27822 (May 11, 2012) (SR–CBOE–2012–040); 67624 (August 8, 2012), 77 FR 48580 (August 14, 2012) (SR–CBOE–2012–040).

[16] *See supra* note 15.

and to remove impediments to and perfect the mechanism of a free and open market and a national market system.

Specifically, the Exchange believes that the permanent approval of the Pilot Program, which eliminates minimum value size requirements for opening transactions in new FLEX series, would provide greater opportunities for investors to manage risk through the use of FLEX Options. Further, the Exchange notes that it has not experienced any adverse effects from the operation of the Pilot Program. The Exchange also believes that making the Pilot Program permanent does not raise any unique regulatory concerns.

The Exchange also believes that eliminating the minimum value size requirements for all other FLEX transactions and FLEX Quotes, thus affording market participants on NYSE Amex Options with an equal opportunity to tailor FLEX transactions to meet their own investment objectives without being encumbered by a minimum contract size, will help to remove impediments to and perfect the mechanism of a free and open market and a national market system. In addition, offering those same market participants similar investment tools available to their counterparts on the CBOE will foster cooperation and coordination with persons engaged in facilitating transactions in securities and will help to remove impediments to a free and open market and a national market system. The Exchange believes that adopting rules similar to those approved for and utilized by the CBOE does not raise any unique regulatory concerns.

Lastly, the Exchange also believes that the proposed rule change, which provides all market participants, including public investors, with additional opportunities to trade customized options in an exchange environment and subject to exchange-based rules, is appropriate in the public interest and for the protection of investors.

B. Self-Regulatory Organization's Statement on Burden on Competition

The Exchange does not believe that the proposed rule change will impose any burden on competition that is not necessary or appropriate in furtherance of the purposes of the Act. Specifically, the proposal is structured to offer the same enhancement to all market participants, regardless of account type, and will not impose a competitive burden on any participant. The Exchange believes that adopting similar FLEX rules to those [sic] the CBOE will allow NYSE Amex Options to more efficiently compete for FLEX Options orders. In addition, the Exchange believes that adopting the Pilot Program on a permanent basis will enable the Exchange to compete with the OTC market, in which similar restrictions on minimum value size do not apply.

C. Self-Regulatory Organization's Statement on Comments on the Proposed Rule Change Received From Members, Participants, or Others

No written comments were solicited or received with respect to the proposed rule change.

III. Date of Effectiveness of the Proposed Rule Change and Timing for Commission Action

Within 45 days of the date of publication of this notice in the **Federal Register** or within such longer period (i) as the Commission may designate up to 90 days of such date if it finds such longer period to be appropriate and publishes its reasons for so finding or (ii) as to which the self-regulatory organization consents, the Commission will:

(A) By order approve or disapprove the proposed rule change, or

(B) institute proceedings to determine whether the proposed rule change should be disapproved.

IV. Solicitation of Comments

Interested persons are invited to submit written data, views, and arguments concerning the foregoing, including whether the proposed rule change is consistent with the Act. Comments may be submitted by any of the following methods:

Electronic Comments

- Use the Commission's Internet comment form (*http://www.sec.gov/rules/sro.shtml*); or
- Send an email to *rule-comments@sec.gov.* Please include File Number SR–NYSEMKT–2014–21 on the subject line.

Paper Comments

- Send paper comments in triplicate to Secretary, Securities and Exchange Commission, 100 F Street, NE., Washington, DC 20549–1090.

All submissions should refer to File Number SR–NYSEMKT–2014–21. This file number should be included on the subject line if email is used. To help the Commission process and review your comments more efficiently, please use only one method. The Commission will post all comments on the Commission's Internet Web site (*http://www.sec.gov/rules/sro.shtml*). Copies of the submission, all subsequent amendments, all written statements with respect to the proposed rule change that are filed with the Commission, and all written communications relating to the proposed rule change between the Commission and any person, other than those that may be withheld from the public in accordance with the provisions of 5 U.S.C. 552, will be available for Web site viewing and printing in the Commission's Public Reference Room, 100 F Street NE., Washington, DC 20549, on official business days between the hours of 10:00 a.m. and 3:00 p.m. Copies of the filing also will be available for inspection and copying at the principal office of the Exchange. All comments received will be posted without change; the Commission does not edit personal identifying information from submissions. You should submit only information that you wish to make available publicly. All submissions should refer to File Number SR–NYSEMKT–2014–21 and should be submitted on or before April 28, 2014.

For the Commission, by the Division of Trading and Markets, pursuant to delegated authority.[17]

Kevin M. O'Neill,

Deputy Secretary.

[FR Doc. 2014–07637 Filed 4–4–14; 8:45 am]

BILLING CODE 8011–01–P

[17] 17 CFR 200.30–3(a)(12).

SMALL BUSINESS ADMINISTRATION

[License No. 07/07–0116]

Eagle Fund III, L.P.; Notice Seeking Exemption Under Section 312 of the Small Business Investment Act, Conflicts of Interest

Notice is hereby given that Eagle Fund III, L.P., 101 S. Hanley Road, Suite 1250, St. Louis, Missouri 63105, a Federal Licensee under the Small Business Investment Act of 1958, as amended (''the Act''), in connection with the financing of a small concern, has sought an exemption under Section 312 of the Act and Section 107.730, Financings which constitute Conflicts of Interest of the Small Business Administration (''SBA'') Rules and Regulations (13 CFR 107). Eagle Fund III, L.P., proposes to provide debt and equity financing to Oliver Street Dermatology Holdings, LLC, 5310 Harvest Hill Road, Suite 229, Dallas, TX 75230.

The financing was contemplated to provide capital that contributes to the growth and overall sound financing of

Oliver Street Dermatology Holdings, LLC. The financing is brought within the purview of § 107.730(a)(1) and § 107.730(d)(1) of the Regulations because, Oliver Street Dermatology Holdings, LLC is considered an Associate of Eagle Fund III, L.P., as defined in Sec.105.50 of the regulations due to common ownership.

Notice is hereby given that any interested person may submit written comments on the transaction within fifteen days of the date of this publications to the Associate Administrator for Investment and Innovation, U.S. Small Business Administration, 409 Third Street SW., Washington, DC 20416.

Javier E. Saade,

Associate Administrator, Office of Investment and Innovation.

[FR Doc. 2014–07666 Filed 4–4–14; 8:45 am]

BILLING CODE P

SMALL BUSINESS ADMINISTRATION

Diamond State Ventures III, L.P.; License No. 06/06–0345; Notice Seeking Exemption Under Section 312 of the Small Business Investment Act, Conflicts of Interest

Notice is hereby given that Diamond State Ventures III, L.P., 200 River Market Avenue, Suite 400, Little Rock, AR 72201, a Federal Licensee under the Small Business Investment Act of 1958, as amended (''the Act''), in connection with the financing of a small concern, has sought an exemption under Section 312 of the Act and Section 107.730, Financings which constitute Conflicts of Interest of the Small Business Administration (''SBA'') Rules and Regulations (13 CFR 107). Diamond State Ventures III, L.P. proposes to provide debt and equity financing to Whitworth Tool, LLC, 114 Industrial Park Road, Hardinsburg, KY 40143.

The financing is brought within the purview of § 107.730(a)(4) of the Regulations because the proceeds will be used to discharge an obligation to Diamond State Ventures II LP, an Associate of Diamond State Ventures III, L.P. Therefore this transaction requires prior SBA exemption.

Notice is hereby given that any interested person may submit written comments on the transaction, within fifteen days of the date of this publication, to the Associate Administrator for Investment and Innovation, U.S. Small Business Administration, 409 Third Street SW., Washington, DC 20416.

Javier E. Saade,

Associate Administrator for Office of Investment and Innovation.

[FR Doc. 2014–07667 Filed 4–4–14; 8:45 am]

BILLING CODE 8025–01–P

DEPARTMENT OF STATE

Public Notice 8682]

Bureau of Oceans and International Environmental and Scientific Affairs; Certifications Pursuant to Section 609 of Public Law 101–162

SUMMARY: The Department of State, in consultation with the National Oceanic and Atmospheric Administration's National Marine Fisheries Service (NMFS), determined that royal red shrimp (*Menopenaeus robustus*) harvested in the Mediterranean Sea may be imported into the United States from Spain pursuant to Section 609 of Public Law 101–162. The Department of State has communicated this information to the Office of Field Operations of U.S. Customs and Border Protection.

DATES: *Effective Date:* On Publication.

FOR FURTHER INFORMATION CONTACT: Stephen J. Wilger, Office of Marine Conservation, Bureau of Oceans and International Environmental and Scientific Affairs, Department of State, Washington, DC 20520–7818; telephone: (202) 647–3263; email: *wilgersj2@state.gov.*

SUPPLEMENTARY INFORMATION: Section 609 of Public Law 101–162 (''Section 609'') prohibits imports of certain categories of shrimp unless the President certifies to the Congress by May 1, 1991, and annually thereafter, either: (1) That the harvesting nation has adopted a program governing the incidental capture of sea turtles in its commercial shrimp fishery comparable to the program in effect in the United States and has an incidental take rate comparable to that of the United States; or (2) that the fishing environment in the harvesting nation does not pose a threat of the incidental taking of sea turtles. The President has delegated the authority to make this certification to the Department of State (''the Department''). Revised State Department guidelines for making the required certifications were published in the **Federal Register** on July 2, 1999 (Vol. 64, No. 130, Public Notice 3086).

Section 609 Certifications are determined on a national basis, rather than on a fishery by fishery basis within a particular country. In particular, Certifications under Section 609(b)(2)(C) are granted only in cases where *no* shrimp fishery in a particular country poses a threat of the incidental taking of sea turtles. Since there are other shrimp fisheries in which Spanish vessels operate that could pose a threat to sea turtles, the Department is not able to determine that Spain qualifies for a national Certification pursuant to this Section.

Even in the absence of a national Certification, shrimp from non-certified countries that meet one of a set of specific criteria may be imported into the United States provided that certain additional conditions are met. The relevant exception in this case can be found in Section I(B)(d) of the Department of State's Revised Guidelines for the Implementation of Section 609 of Public Law 101–162, which allows imports of:

> ''(d) Shrimp harvested in any other manner or under any other circumstances that the Department of State may determine, following consultation with the [NOAA/NMFS], does not pose a threat of the incidental taking of sea turtles.''

The Department of State has consulted with NMFS and determined that imports of royal red shrimp *(Menopenaeus robustus)* from the Spanish Mediterranean shrimp trawl fleet may be imported into the United States pursuant to the Section I(B)(d) of the Department's implementing guidelines. Such imports must be accompanied by the State Department Form DS–2031 (''Shrimp Exporter's/Importer's Declaration'') and must indicate on the form that the import is eligible for importation into the United States by checking section 7(A)(4) for ''shrimp harvested in a manner or under circumstances determined by the Department of State not to pose a threat of the incidental taking of sea turtles.'' In addition, an official of the Government of Spain with knowledge of the method of harvest of the product must certify the DS–2031 forms accompanying any imports into the United States. All DS–2031 forms accompanying shrimp imports from Spain must be originals and signed by the competent domestic fisheries authority.

Dated: March 25, 2014.

David A. Balton,

Deputy Assistant Secretary of State for Oceans and Fisheries, Department of State.

[FR Doc. 2014–07707 Filed 4–4–14; 8:45 am]

BILLING CODE 4710–09–P

DEPARTMENT OF STATE

[Delegation of Authority No. 371]

Delegation of Authority Under Section 13(r)(5) of the Securities Exchange Act of 1934, as Amended

By virtue of the authority vested in me as Secretary of State, including Section 1 of the State Department Basic Authorities Act, as amended (22 U.S.C. 2651a), and the Presidential Memorandum of October 9, 2012, I hereby delegate to the Under Secretary for Political Affairs and the Assistant Secretary for Economic and Business Affairs, to the extent authorized by law, the functions set forth in section 13(r)(5) of the Securities Exchange Act of 1934, as amended (codified at 15 U.S.C. 78m(r)(5)(A)).

This delegation of authority does not include the authority to make determinations that an issuer is to be sanctioned, impose sanctions, or exercise any related waiver authorities with respect to any issuer (or any affiliate of the issuer).

Any act, executive order, regulation, or procedure subject to, or affected by, this delegation shall be deemed to be such act, executive order, regulation, or procedure as amended from time to time.

Notwithstanding any provision of this Delegation of Authority, the Secretary, the Deputy Secretary, the Deputy Secretary for Management and Resources, and the Under Secretary for Economic Growth, Energy, and the Environment, may at any time exercise any function delegated by this delegation of authority.

This delegation of authority shall be published in the **Federal Register**.

Dated: January 9, 2014.

John F. Kerry,

Secretary of State, Department of State.

[FR Doc. 2014–07710 Filed 4–4–14; 8:45 am]

BILLING CODE 4710–07–P

DEPARTMENT OF STATE

[Public Notice 8683]

Report to Congress Pursuant to Section 1245(e) of the National Defense Authorization Act for Fiscal Year 2013 (FY13 NDAA)

AGENCY: Department of State.

ACTION: Notice of Report.

FOR FURTHER INFORMATION CONTACT: On general issues: Office of Counterproliferation Initiatives, Department of State, Telephone: (202) 647–5193.

Report (February 10, 2014)

Section 1245(e) of the FY13 NDAA, known as the Iran Freedom and Counterproliferation Act of 2012, as delegated, requires that the Secretary of State, in consultation with the Secretary of the Treasury, determine (1) whether Iran is (a) using any of the materials described in subsection (d) of Section 1245 of the FY13 NDAA as a medium for barter, swap, or any other exchange or transaction; or (b) listing any of such materials as assets of the Government of Iran for purposes of the national balance sheet of Iran; (2) which sectors of the economy of Iran are controlled directly or indirectly by Iran's Islamic Revolutionary Guard Corps (IRGC); and (3) which of the materials described in subsection (d) are used in connection with the nuclear, military, or ballistic missile programs of Iran. Materials described in subsection (d) of Section 1245 are graphite, raw or semi-finished metals such as aluminum and steel, coal, and software for integrating industrial processes.

Following a review of the available information, and in consultation with the Department of the Treasury and the intelligence community, the Under Secretary for Political Affairs has determined, pursuant to further delegated authority, that Iran is not using the materials described in Section 1245(d) as a medium for barter, swap, or any other exchange or transaction; nor is Iran listing any such materials as assets of the Government of Iran for purposes of the national balance sheet of Iran.

Following a review of the available information, and in consultation with the Department of the Treasury and the intelligence community, the Under Secretary for Political Affairs has also determined, pursuant to that further delegated authority, that the IRGC exercises indirect control over Iran's energy sector.

Finally, following a review of the available information, and in consultation with the Department of the Treasury and the intelligence community, the Under Secretary for Political Affairs has determined, pursuant to that further delegated authority, that of the 31 materials expected to be included within the scope of subsection (d), certain types of the following materials are used in connection with the nuclear, military, or ballistic missile programs of Iran: Aluminum, beryllium, boron, cobalt, copper, copper-infiltrated tungsten, copper-beryllium, graphite, hastelloy, inconel, magnesium, molybdenum, nickel, niobium, silver-infiltrated tungsten, steels (including, but not limited to, maraging steels and stainless steels), titanium, titanium diboride, tungsten, tungsten carbide, and zirconium.

Dated: March 26, 2014.

Thomas M. Countryman,

Assistant Secretary of State for International Security and Nonproliferation, Department of State.

[FR Doc. 2014–07709 Filed 4–4–14; 8:45 am]

BILLING CODE 4710–27–P

DEPARTMENT OF TRANSPORTATION

Office of the Secretary of Transportation

Requirements for the Secretary of Transportations Recognizing Aviation and Aerospace Innovation in Science and Engineering Awards

AGENCY: Office of the Secretary of Transportation, Department of Transportation.

ACTION: Notice of the announcement of Requirements for the Secretary of Transportation's RAISE (Recognizing Aviation and Aerospace Innovation in Science and Engineering) Awards.

Authority: 15 U.S.C. 3719 (America COMPETES Act).

Award Approving Official: Anthony Foxx, Secretary of Transportation.

SUMMARY: Pursuant to a recommendation by the Future of Aviation Advisory Committee, the Secretary of Transportation is announcing the third-annual competition to recognize students with the ability to demonstrate unique, innovative thinking in aerospace science and engineering. In its third year, the Secretary has decided to create two divisions within the award: A high school division and a university division (both undergraduate and graduate). The Secretary of Transportation intends to use the awards to incentivize students at high schools and universities to think creatively in developing innovative solutions to aviation and aerospace issues, and to share those innovations with the broader community.

DATES: Effective on April 01, 2014 to October 31, 2014.

FOR FURTHER INFORMATION CONTACT: Patricia Watts, Ph.D., Federal Aviation Administration, (609) 485–5043, *patricia.watts@faa.gov,* or James Brough, Federal Aviation Administration, (781) 238–7027, *james.brough@faa.gov.*

SUPPLEMENTARY INFORMATION:

Subject of Challenge Competition: The Secretary's RAISE (Recognizing Aviation & Aerospace Innovation in Science and Engineering) Award will recognize innovative scientific and engineering achievements that will have a significant impact on the future of aerospace or aviation. Following an open solicitation by the United States Department of Transportation (''the Department''), the Secretary of Transportation (''the Secretary'') will designate an Award Review Board Chair, who will submit nominations to the Secretary for final consideration. The rules for this competition will be available at *http://www.challenge.gov.*

Eligibility:

To be eligible to participate in the Secretary's RAISE Award competition, students must be U.S. citizens or permanent residents. For the high school division, the students must have been enrolled in at least one semester (or quarterly equivalent) at a U.S. high school (or equivalent approved home school program) in 2014. For the University division, the student must have been enrolled in a U.S.-based college or university for at least one semester (or quarterly equivalent) in 2014. Students may participate and be recognized as individuals or in teams. Each member of a team must meet the eligibility criteria. An individual may join more than one team. There is no charge to enter the competition.

The following additional rules apply:

1. Candidates shall submit a project in the competition under the rules promulgated by the Department;
2. Candidates shall agree to execute indemnifications and waivers of claims against the Federal government as provided in this Notice;
3. Candidates may not be a Federal entity or Federal employee acting within the scope of employment;
4. Candidates may not be an employee of the Department, including but not limited to the Federal Aviation Administration, or the Research and Innovative Technology Administration;
5. Candidates shall not be deemed ineligible because an individual used Federal facilities or consulted with Federal employees during a competition, if the facilities and employees are made available to all individuals participating in the competition on an equitable basis;
6. The competition is subject to all applicable Federal laws and regulations. Participation constitutes the Candidates' full and unconditional agreement to these rules and to the Secretary's decisions, which are final and binding in all matters related to this competition;
7. Submissions which in the Secretary's sole discretion are determined to be substantially similar to a prior submitted entry may be disqualified;
8. Submissions must be original, be the work of the Candidates, and must not violate the rights of other parties. All submissions remain the property of the applicants. Each Candidate represents and warrants that he, she, or the team, is the sole author and owner of the submission, that the submission is wholly original, that it does not infringe any copyright or any other rights of any third party of which the Candidate is aware, and, if submitted in electronic form, is free of malware;
9. By submitting an entry in this contest, contestants and entrants agree to assume any and all risks and waive any claims against the Federal Government and its related entities (except in the case of willful misconduct) for any injury, death, damage, or loss of property, revenue or profits, whether direct, indirect, or consequential, arising from their participation in this contest, whether the injury, death, damage, or loss arises through negligence of otherwise. Provided, however, that by registering or submitting an entry, contestants and entrants do not waive claims against the Department arising out of the unauthorized use or disclosure by the agency of the intellectual property, trade secrets, or confidential information of the entrant;
10. The Secretary and the Secretary's designees have the right to request access to supporting materials from the Candidates;
11. The submissions cannot have been submitted in the same or substantially similar form in any previous Federally-sponsored promotion or Federally-sponsored contest, of any kind;
12. Each Candidate grants to the Department, as well as other Federal agencies with which it partners, the right to use names, likeness, application materials, photographs, voices, opinions, and/or hometown and state for the Department's promotional purposes in any media, in perpetuity, worldwide, without further payment or consideration; and
13. The Secretary collects personal information from Candidates when they enter this competition. The information collected is subject to the ChallengePost privacy policy located at *http://www.challengepost.com/privacy.*

Expression of Interest:

While not required, students are strongly encouraged to send brief expressions of interest to the Department to be considered for an award. The expressions of interest should be sent by June 1, 2014 to the contact shown below and should include the following elements: (1) Name of Candidate(s); (2) Name of educational institution(s) with which Candidate(s) are affiliated; (2) Telephone and email addresses for Candidate(s); (3) brief high-level overview of the proposed project.

Submission Requirements:

Final submission packages shall consist of the following elements:

1. Nomination letter from at least one teacher, advisor, faculty member, and others as appropriate. The nomination letter(s) must communicate accomplishments in the following areas:

a. Technical Merit of the Concept

Evidence of technical merit based upon teacher (parent or legal guardian in the case of home schooled applicants), advisor, or faculty nomination and evaluation of the submitted proposal, written paper, and/or reports.

b. Professionalism and Leadership

Evidence of professionalism and leadership may be in the form of, but not limited to:

(1) Membership and offices held in various groups

(2) Presentations made to various groups, meetings, and at symposia

(3) Leadership in student professional activities

(4) Community outreach activities

2. An overall summary of the innovation, not to exceed one page, which includes a title of the project and statement of the impact that the innovation will have on the field of aviation or aerospace;
3. A copy of the student's academic transcript or certified grade report (as applicable);
4. A copy of the paper(s) and related materials describing the innovative concept written by the student(s) being nominated (no page limit).

Once submissions have been received, the Department may request additional information, including supporting documentation, more detailed contact information, releases of liability, and statements of authenticity to guarantee the originality of the work. Failure to respond in a timely fashion may result in disqualification.

All materials should be forwarded with a cover letter to the attention of: Patricia Watts, Ph.D., Centers of Excellence Program Director, Federal Aviation Administration, L–28, FAA William J. Hughes Technical Center, Atlantic City International Airport, NJ 08405.

Hardcopy is preferred; however, the package also may be transmitted by email to *Patricia.Watts@FAA.gov.* The submission period begins on May 1, 2014. Submissions must be sent by 11:59 p.m. Pacific daylight time on October 31, 2014. The timeliness of submissions will be determined by the postmark (if sent in hard copy) or time stamp of the recipient (if emailed). Award administrators assume no responsibility for lost or untimely submissions for any reason.

Award:

The winner will be announced by the end of 2014. A trophy with the winner's name and date of award will be displayed at the Department of Transportation and a display copy of the trophy will be sent to the winner's school/college/university. An additional plaque or trophy will be awarded to the individual or team. At the option of the Secretary, the Department will pay for invitational travel expenses to Washington, DC for up to four representatives of the winning teams to present their project to Department officials and receive the award from the Secretary.

Basis Upon Which the Winners Will Be Selected:

All submissions will be initially reviewed by the FAA Centers for Excellence Program Director upon receipt to determine if the submissions meet the eligibility requirements. Registration packages meeting the eligibility requirements will be judged by advisory panels consisting of academic experts, government officials including FAA, the Department, and representatives of the private sector. The advisory panels will select the most highly qualified submissions and present them to the Secretary of the Department, who will select the winning entrant.

Submissions will be judged against other submissions from the same division on the following criteria:

Technical Merit:

- Has the submission presented a clear understanding of the associated problems?
- Has the submission developed a logical and workable solution and approach to solving the problem/s?
- What are the most significant aspects of this concept?
- Has the submission clearly described the breadth of impact of the innovation?

Originality:

- Is this concept new or a variation of an existing idea, and in what way(s)?
- How is this work unique?
- Was the concept developed independently or in cooperation with others?

Impact:

- To what extent will this project make a significant impact and/or contribution to the future of the aviation and aerospace environment?

Practicality:

- Who directly benefits from this work?
- Can this program or activity be implemented in a practical fashion?
- What are the costs anticipated to be incurred and saved by executing this concept?

Measurability:

- How has this individual/group measured the impact on the aviation environment?
- To what extent does the innovation result in measurable improvements?

Applicability:

- Can this effort be scaled?
- Is this work specific to one region, various regions, or to the entire nation?

All factors are important and will be given consideration, but the advisory panels will give the ''technical merit'' factor the most weight in the screening process. The Secretary retains sole discretion to select the winning entrant.

Additional Information:

Federal grantees may not use Federal funds to develop COMPETES Act challenge applications.

Federal contractors may not use Federal funds from a contract to develop COMPETES Act challenge applications or to fund efforts in support of a COMPETES Act challenge submission.

Issued On: April 1, 2014.

Susan L. Kurland,

Assistant Secretary of Aviation and International Affairs.

[FR Doc. 2014–07699 Filed 4–4–14; 8:45 am]

BILLING CODE 4910–9X–P

DEPARTMENT OF TRANSPORTATION

Federal Motor Carrier Safety Administration

[Docket No. FMCSA–2013–0349]

Agency Information Collection Activities; Revision of a Currently Approved Information Collection Request: Hazardous Materials Safety Permits

AGENCY: Federal Motor Carrier Safety Administration (FMCSA), DOT.

ACTION: Notice and request for comments.

SUMMARY: In accordance with the Paperwork Reduction Act of 1995, FMCSA announces its plan to submit the Information Collection Request (ICR) described below to the Office of Management and Budget (OMB) for review and approval. The FMCSA requests approval to revise and extend an ICR entitled, *''Hazardous Materials Safety Permits.''* This ICR requires companies holding permits to develop communications plans that allow for the periodic tracking of the shipments. A record of the communications that includes the time of the call and location of the shipment may be kept by either the driver (e.g., recorded in the log book) or the company. The motor carrier or driver must maintain a record of the communications for at least six months after the initial acceptance of a shipment of hazardous material for which a safety permit is required.

DATES: Please send your comments by May 7, 2014. OMB must receive your comments by this date in order to act on the ICR.

ADDRESSES: All comments should reference Federal Docket Management System (FDMS) Docket Number FMCSA–2013–0349. Interested persons are invited to submit written comments on the proposed information collection to the Office of Information and Regulatory Affairs, Office of Management and Budget. Comments should be addressed to the attention of the Desk Officer, Department of Transportation/Federal Motor Carrier Safety Administration, and sent via electronic mail to *oira_submission@omb.eop.gov*, or faxed to (202) 395–6974, or mailed to the Office of Information and Regulatory Affairs, Office of Management and Budget, Docket Library, Room 10102, 725 17th Street NW., Washington, DC 20503.

FOR FURTHER INFORMATION CONTACT: Mr. Paul Bomgardner, Hazardous Materials Division, Department of Transportation, Federal Motor Carrier Safety Administration, West Building 6th Floor, 1200 New Jersey Avenue SE., Washington, DC 20590. Telephone: 202–493–0027; email *paul.bomgardner@dot.gov*. Office hours are from 9 a.m. to 5 p.m., Monday through Friday, except Federal Holidays.

SUPPLEMENTARY INFORMATION:

Title: Hazardous Materials Safety Permits.

OMB Control Number: 2126–0030.

Type of Request: Revision of a currently approved ICR.

Respondents: Motor carriers subject to the Hazardous Materials Safety Permit. requirements in 49 CFR Part 385 Subpart E.

Estimated Number of Respondents: 1,382.

Estimated Time per Response: 5 minutes. The communication between motor carriers and their drivers must take place at least two times per day. It is estimated that it will take 5 minutes to maintain a daily communication record for each driver.

Expiration Date: May 31, 2014.

Frequency of Response: On occasion.

Estimated Total Annual Burden: 967,000 hours [11.6 million trips × 5 minutes/60 minutes per record = 966,666.66 rounded to 967,000].

Background

The Secretary of Transportation (Secretary) is responsible for implementing regulations to issue safety permits for transporting certain Hazardous Materials (HM) in accordance with 49 U.S.C. 5101 *et seq.* The HM Safety Permit regulations (49 CFR part 385, Subpart E) require carriers to complete a ''Combined Motor Carrier Identification Report and HM Permit Application'' (Form MCS–150B). The HM Safety Permit regulations also require carriers to have a security program. As part of the HM Safety Permit regulations, carriers are required to develop and maintain route plans so that law enforcement officials can verify the correct location of the HM shipment. The FMCSA requires companies holding permits to develop a communications plan that allows for the periodic tracking of the shipment. This information covers the record of communications that includes the time of the call and location of the shipment. The records must be kept by either the driver (e.g., recorded in the log book) or the company for at least six months after the initial acceptance of a shipment of hazardous material for which a safety permit is required.

Comments From the Public

General Summary

FMCSA received three comments to the 60-day **Federal Register** notice published on December 10, 2013 (78 FR 74222) regarding the Agency's Information Collection Activities; Revision of a Currently-Approved Information Collection Request: Hazardous Materials Safety Permits. Comments were received from Boyle Transportation, a business consultant and engineer, and Landstar Transportation Logistics. Comments and responsive considerations are as follows:

Boyle Transportation commented that it is necessary to track shipments more than two times a day; tracking technologies are widely available in the industry and carriers should maintain fully staffed operations center to monitor shipments. FMCSA responded that the requirements stated in 49 CFR 385.415(c)(1) are a minimum requirement for Hazardous Materials Safety Permits (HMSP) carriers and carriers are encouraged to use state-of-the art monitoring and tracking devices.

The business consultant and engineer stated that we should start taking a stand against pollution. There was no return address in the comment for FMCSA to send a response, and the comment is beyond the scope of this ICR.

Landstar Transportation Logistics asks that if a carrier is using a satellite tracking system to monitor a hazardous materials load, FMCSA should eliminate the redundant requirement for operators to make specific contact with the carrier at the beginning and end of each duty tour, and at the pickup and delivery of each permitted load. FMCSA responded that the requirement is not viewed as redundant and the requirements stated in 49 CFR 385.415(c)(1) are a basic and minimum requirement for all HMSP carriers and carriers are encouraged to use state-of-the-art tracking devices, but their use is not required.

Public Comments Invited: You are asked to comment on any aspect of this information collection, including: (1) Whether the proposed collection is necessary for the FMCSA to perform its functions; (2) the accuracy of the estimated burden; (3) ways for the FMCSA to enhance the quality, usefulness, and clarity of the collected information; and (4) ways that the burden could be minimized without reducing the quality of the collected information.

Issued under the authority of 49 CFR 1.87 on: March 31, 2014.

G. Kelly Leone,

Associate Administrator, Office of Research and Information Technology and Chief Information Officer.

[FR Doc. 2014–07690 Filed 4–4–14; 8:45 am]

BILLING CODE 4910–EX–P

DEPARTMENT OF TRANSPORTATION

Federal Motor Carrier Safety Administration

[Docket No. FMCSA–2014–0096]

Commercial Driver's License: Commonwealth of Virginia, Department of Motor Vehicles; Application for Exemption

AGENCY: Federal Motor Carrier Safety Administration (FMCSA), DOT.

ACTION: Notice of application for exemption; request for comments.

SUMMARY: FMCSA announces that it has received an application from the Commonwealth of Virginia Department of Motor Vehicles (Virginia DMV) for a limited exemption from the Agency's commercial driver's license (CDL) regulation. Section 383.77(b)(1) allows a State to waive the CDL skills test described in 49 CFR 383.113 for applicants regularly employed or previously employed within the last 90 days in a military position requiring operation of a commercial motor vehicle (CMV). Virginia DMV proposes that it be allowed to extend the 90-day timeline to one year following the driver's separation from military service. Virginia DMV believes the 90-day timeframe is too short to take advantage of the waiver for many of the qualified discharged veterans reentering and settling into civilian life. FMCSA requests public comment on Virginia DMV's application for exemption. In addition, because the issues concerning the Virginia DMV request could be applicable in each of the States, FMCSA requests public comment whether the exemption, if granted, should cover all State Driver's Licensing Agencies (SDLAs).

DATES: Comments must be received on or before May 7, 2014.

ADDRESSES: You may submit comments identified by Federal Docket Management System Number FMCSA–2014–0096 by any of the following methods:

- *Federal eRulemaking Portal: www.regulations.gov.* Follow the online instructions for submitting comments.
- *Fax:* 1–202–493–2251.
- *Mail:* Docket Management Facility, U.S. Department of Transportation, 1200 New Jersey Avenue SE., West Building, Ground Floor, Room W12–140, Washington, DC 20590–0001.
- *Hand Delivery or Courier:* West Building, Ground Floor, Room W12–140, 1200 New Jersey Avenue SE., between 9 a.m. and 5 p.m. E.T., Monday through Friday, except Federal holidays.

Instructions: All submissions must include the Agency name and docket number. For detailed instructions on submitting comments and additional information on the exemption process, see the *Public Participation* heading below. Note that all comments received will be posted without change to *www.regulations.gov,* including any personal information provided. Please see the *Privacy Act* heading below.

Docket: For access to the docket to read background documents or

comments received, go to *www.regulations.gov,* and follow the online instructions for accessing the dockets, or go to the street address listed above.

Privacy Act: Anyone is able to search the electronic form of all comments received into any of our dockets by the name of the individual submitting the comment (or signing the comment, if submitted on behalf of an association, business, labor union, etc.). You may review a Privacy Act notice regarding our public dockets in the January 17, 2008, issue of the **Federal Register** (73 FR 3316).

Public participation: The Federal eRulemaking Portal is available 24 hours each day, 365 days each year. You can obtain electronic submission and retrieval help and guidelines under the ''help'' section of the Federal eRulemaking Portal Web site. If you want us to notify you that we received your comments, please include a self-addressed, stamped envelope or postcard, or print the acknowledgement page that appears after submitting comments online. Comments received after the comment closing date will be included in the docket and will be considered to the extent practicable.

FOR FURTHER INFORMATION CONTACT: Ms. Pearlie Robinson, FMCSA Driver and Carrier Operations Division; Office of Carrier, Driver and Vehicle Safety Standards; Telephone: 202–366–4325. Email: *MCPSD@dot.gov.*

SUPPLEMENTARY INFORMATION:

Background

FMCSA has authority under 49 U.S.C. 31136(e) and 31315 to grant exemptions from certain parts of the Federal Motor Carrier Safety Regulations. FMCSA must publish a notice of each exemption request in the **Federal Register** (49 CFR 381.315(a)). The Agency must provide the public an opportunity to inspect the information relevant to the application, including any safety analyses that have been conducted. The Agency must also provide an opportunity for public comment on the request.

The Agency reviews safety analyses and public comments submitted, and determines whether granting the exemption would likely achieve a level of safety equivalent to, or greater than, the level that would be achieved by the current regulation (49 CFR 381.305). The decision of the Agency must be published in the **Federal Register** (49 CFR 381.315(b)) with the reasons for denying or granting the application and, if granted, the name of the person or class of persons receiving the exemption, and the regulatory provision from which the exemption is granted. The notice must also specify the effective period and explain the terms and conditions of the exemption. The exemption may be renewed (49 CFR 381.300(b)).

Request for Exemption

Virginia DMV requests an exemption from 49 CFR 383.77(b)(1), which allows States to waive the skills test described in section 383.113 for applicants regularly employed or previously employed within the last 90 days in a military position requiring operation of a CMV. Virginia DMV proposes that it be allowed to extend the 90-day timeline to one year following the driver's separation from military service.

Virginia DMV has a comprehensive Troops to Trucks program that assists service members in obtaining a Virginia CDL and civilian employment in the motor carrier industry. Feedback from the Troops to Trucks military partners has identified the 90-day limit as an obstacle to service members transitioning to civilian life.

Virginia DMV contends that the 90-day timeframe is too short for many of the qualified veterans to utilize while reentering civilian life.

According to Virginia DMV, since July 2012 183 service members have utilized the 90-day waiver through the Virginia Troops to Trucks program. It anticipates that an exemption would allow an additional 60 to 100 recent veterans to participate in the program per year. The one-year timeframe is consistent with FMCSA's November 2013 Report to Congress regarding a program to assist veterans to acquire CDLs. The American Trucking Associations has estimated that the motor carrier industry needs about 96,000 new drivers every year. Providing additional flexibility in section 383.77(b)(1) will help to expedite the transition of fully trained military truck drivers to civilian employment.

Virginia DMV believes this goal is in the Nation's best interest. A more accessible waiver period would greatly benefit returning veterans. This is consistent with FMCSA's belief that the skills test waiver serves an important function for military personnel returning to the civilian workforce, as stated in the May 9, 2011 **Federal Register** notice that created the 90-day waiver (76 FR 26864).

In addition, because the issues concerning the Virginia DMV request could be applicable in each of the States, FMCSA requests public comment on whether the exemption, if granted, should cover all State Driver's Licensing Agencies (SDLAs).

A copy of Virginia DMV's application for exemption is available for review in the docket for this notice.

Request for Comments

In accordance with 49 U.S.C. 31136(e) and 31315(b)(4), FMCSA requests public comment on Virginia DMV's application for an exemption from 49 CFR 383.77(b)(1).

The Agency will consider all comments received by close of business on May 7, 2014. Comments will be available for examination in the docket at the location listed under the **ADDRESSES** section of this notice. The Agency will consider to the extent practicable comments received in the public docket after the closing date of the comment period.

Issued on: March 31, 2014.

Larry W. Minor,

Associate Administrator for Policy.

[FR Doc. 2014–07695 Filed 4–4–14; 8:45 am]

BILLING CODE 4910–EX–P

DEPARTMENT OF TRANSPORTATION

Maritime Administration

Docket Number MARAD–2014–0051]

Ex-USNS COMET Available for Donation

AGENCY: Maritime Administration, Department of Transportation.

ACTION: Notice: Vessel Available for Donation.

SUMMARY: The Maritime Administration (MARAD) plans to dispose of an obsolete vessel, the ex-USNS COMET (T–AK–269), which is currently located at its Suisun Bay Reserve Fleet in Benicia, California. MARAD, in consultation with the California State Historic Preservation Office, determined that the vessel is eligible for listing on the National Register of Historic Places under Criterion c. The ex-USNS COMET is considered to be the first purpose-built oceangoing ''roll-on/roll-off'' vessel. Roll-on/roll-off, or Ro/Ro, describes how wheeled-vehicular cargo is loaded and unloaded.

MARAD is authorized to provide qualified public and non-profit organizations the opportunity to obtain, via donation, obsolete ships from the National Defense Reserve Fleet (NDRF) for use as memorials and/or in other non-commercial enterprises. Accordingly, MARAD is issuing this notice to provide the public and non-profit organizations such an opportunity. For donation application

information, please see **FOR FURTHER INFORMATION CONTACT** below.

DATES: Completed donation applications must be received on or before July 7, 2014. MARAD will not consider completed donation applications filed after this date.

ADDRESSES: You may submit completed donation applications identified as the ex-USNS COMET by any of the following methods:

- Email: *Shawn.Ireland@dot.gov* or (202) 366–5787. Include the ex-USNS COMET in the subject line of the message.
- Overnight Mail: U.S. Department of Transportation, Maritime Administration, Office of Ship Disposal Program (MAR–640), 1200 New Jersey Avenue SE., Washington, DC 20590, Attention: Shawn Ireland.

FOR FURTHER INFORMATION CONTACT: Please visit the MARAD Ship Donation Program at *http://www.marad.dot.gov/ships_shipping_landing_page/ship_disposal_program/ship_donation_program/Ship_Donation_Program.htm* or contact Shawn Ireland, Office of Ship Disposal, Maritime Administration, at (202) 366–5787.

SUPPLEMENTARY INFORMATION:

Background

The ex-USNS COMET is considered to be the first purpose-built oceangoing ''roll-on/roll-off'' vessel. Roll-on/roll-off, or Ro/Ro, describes how wheeled-vehicular cargo is loaded and unloaded. This method was first developed during WWII for amphibious assault operations using short range landing craft. In the postwar period, the concept was refined and expanded beyond the assault class to include the rapid delivery by ship of vehicles carrying military supplies and equipment that could be immediately driven into forward staging areas. This eventually led to the development of the commercial Ro/Ro trade, particularly for cars and light trucks. The ex-USNS COMET has been nicknamed the ''Mother of All Ro/Ros'' in honor of its pioneering design.

The ex-USNS COMET operated as part of the common user fleet of the Military Sea Transportation Service (MSTS), later the Military Sealift Command (MSC). The vessel was designed by the naval architectural firm founded in 1920 by George G. Sharp. Sharp was a chief surveyor of the American Bureau of Shipping, and later designed many notable vessels, including the first nuclear-powered cargo-passenger vessel and National Historic Landmark N/S SAVANNAH. COMET influenced the design of future generations of roll- on/roll-off vessels, particularly USNS METEOR, which is a larger version of the ex-USNS COMET. It is the lone ship of its class.

(**AUTHORITY:** The National Defense Authorization Act for Fiscal Year 2004, § 3512 of Pub. L. 108–136.)

By Order of the Maritime Administrator.

Julie P. Agarwal,

Secretary, Maritime Administration.

[FR Doc. 2014–07671 Filed 4–4–14; 8:45 am]

BILLING CODE 4910–81–P

DEPARTMENT OF TRANSPORTATION

Surface Transportation Board

[Docket No. AB 290 (Sub-No. 361X)]

Norfolk Southern Railway Company—Abandonment Exemption—in Prince Edward County, VA

Norfolk Southern Railway Company (NSR) has filed a verified notice of exemption under 49 CFR pt. 1152 subpart F—*Exempt Abandonments* to abandon approximately 1 mile of rail line located in Prince Edward County, Va., extending from milepost N 167.9 (near the intersection of Pamplin Road/US Rte. 460 Bypass and Heights School Road) to milepost N 168.9 (0.6 miles east of the Appomattox County-Prince Edward County line), all of which is located in the Town of Pamplin City (the Line). The Line traverses United States Postal Service Zip Code 23958.

NSR has certified that: (1) No local traffic has moved over the Line for at least two years; (2) no overhead traffic has moved over the Line for at least two years and that overhead traffic, if there were any, could be rerouted over other lines; (3) no formal complaint filed by a user of rail service on the Line (or by a state or local government entity acting on behalf of such user) regarding cessation of service over the Line either is pending with the Surface Transportation Board (Board) or with any U.S. District Court or has been decided in favor of complainant within the two-year period; and (4) the requirements at 49 CFR 1105.7(c) (environmental report), 49 CFR 1105.11 (transmittal letter), 49 CFR 1105.12 (newspaper publication), and 49 CFR 1152.50(d)(1) (notice to governmental agencies) have been met.

As a condition to this exemption, any employee adversely affected by the abandonment shall be protected under *Oregon Short Line Railroad—Abandonment Portion Goshen Branch Between Firth & Ammon, in Bingham & Bonneville Counties, Idaho,* 360 I.C.C. 91 (1979). To address whether this condition adequately protects affected employees, a petition for partial revocation under 49 U.S.C. 10502(d) must be filed.

Provided no formal expression of intent to file an offer of financial assistance (OFA) has been received, this exemption will be effective on May 7, 2014, unless stayed pending reconsideration. Petitions to stay that do not involve environmental issues,[1] formal expressions of intent to file an OFA under 49 CFR 1152.27(c)(2),[2] and trail use/rail banking requests under 49 CFR 1152.29 must be filed by April 17, 2014. Petitions to reopen or requests for public use conditions under 49 CFR 1152.28 must be filed by April 28, 2014, with the Surface Transportation Board, 395 E Street SW., Washington, DC 20423–0001.

A copy of any petition filed with the Board should be sent to NSR's representative: William A. Mullins, Baker & Miller PLLC, 2401 Pennsylvania Ave. NW., Suite 300, Washington, DC 20037.

If the verified notice contains false or misleading information, the exemption is void *ab initio.*

NSR has filed a combined environmental and historic report that addresses the effects, if any, of the abandonment on the environment and historic resources. OEA will issue an environmental assessment (EA) by April 11, 2014. Interested persons may obtain a copy of the EA by writing to OEA (Room 1100, Surface Transportation Board, Washington, DC 20423–0001) or by calling OEA at (202) 245–0305. Assistance for the hearing impaired is available through the Federal Information Relay Service at (800) 877–8339. Comments on environmental and historic preservation matters must be filed within 15 days after the EA becomes available to the public.

Environmental, historic preservation, public use, or trail use/rail banking conditions will be imposed, where appropriate, in a subsequent decision.

Pursuant to the provisions of 49 CFR 1152.29(e)(2), NSR shall file a notice of consummation with the Board to signify that it has exercised the authority granted and fully abandoned the Line. If consummation has not been effected by

---

[1] The Board will grant a stay if an informed decision on environmental issues (whether raised by a party or by the Board's Office of Environmental Analysis (OEA) in its independent investigation) cannot be made before the exemption's effective date. *See Exemption of Out-of-Serv. Rail Lines,* 5 I.C.C. 2d 377 (1989). Any request for a stay should be filed as soon as possible so that the Board may take appropriate action before the exemption's effective date.

[2] Each OFA must be accompanied by the filing fee, which is currently set at $1,600. *See* 49 CFR 1002.2(f)(25).

NSR's filing of a notice of consummation by April 7, 2015, and there are no legal or regulatory barriers to consummation, the authority to abandon will automatically expire.

Board decisions and notices are available on our Web site at *www.stb.dot.gov.*

Decided: April 2, 2014.

By the Board, Rachel D. Campbell, Director, Office of Proceedings.

Derrick A. Gardner,

Clearance Clerk.

[FR Doc. 2014–07719 Filed 4–4–14; 8:45 am]

BILLING CODE 4915–01–P

DEPARTMENT OF THE TREASURY

Internal Revenue Service

Proposed Collection; Comment Request for Form 1099–LTC

AGENCY: Internal Revenue Service (IRS), Treasury.

ACTION: Notice and request for comments.

SUMMARY: The Department of the Treasury, as part of its continuing effort to reduce paperwork and respondent burden, invites the general public and other Federal agencies to take this opportunity to comment on proposed and/or continuing information collections, as required by the Paperwork Reduction Act of 1995, Public Law 104–13(44 U.S.C. 3506(c)(2)(A)). Currently, the IRS is soliciting comments concerning Form 1099–LTC, Long-term Care and Accelerated Death Benefits.

DATES: Written comments should be received on or before June 6, 2014 to be assured of consideration.

ADDRESSES: Direct all written comments to Christie Preston, Internal Revenue Service, Room 6129, 1111 Constitution Avenue NW., Washington, DC 20224.

FOR FURTHER INFORMATION CONTACT: Requests for additional information or copies of the form and instructions should be directed to Kerry Dennis at Internal Revenue Service, Room 6129, 1111 Constitution Avenue NW., Washington, DC 20224, or through the Internet at *Kerry.Dennis@irs.gov*.

SUPPLEMENTARY INFORMATION:

Title: Long-Term Care and Accelerated Death Benefits.

OMB Number: 1545–1519.

Form Number: 1099–LTC.

Abstract: Payers of benefits under a qualified long-term care insurance contract, and any payer of accelerated death benefits under a life insurance contract are required to report the gross amount of such benefits made to a payee in a tax year (Section 6050Q). Form 1099–LTC is used to report the gross amount of Long term Care benefits.

Current Actions: There are no changes being made to the form at this time, however the Department has updated the burden associated with the ICR to reflect its most recent data on Form 1099–LTC filings. We estimate 213,453 additional filings which will increase our estimates from 79,047 to 292,500. The estimate is based on updated filing projections and previous year filings. There are no additional program changes that will affect the burden estimates.

Type of Review: Extension of a currently approved collection.

Affected Public: Businesses or other for-profit organizations, individuals or households, not-for-profit institutions, and state, local or tribal governments.

Estimated Number of Responses: 292,500.

Estimated Time per Response: 13 minutes.

Estimated Total Annual Burden Hours: 67,275.

The following paragraph applies to all of the collections of information covered by this notice:

An agency may not conduct or sponsor, and a person is not required to respond to, a collection of information unless the collection of information displays a valid OMB control number.

Books or records relating to a collection of information must be retained as long as their contents may become material in the administration of any internal revenue law. Generally, tax returns and tax return information are confidential, as required by 26 U.S.C. 6103.

Request for Comments: Comments submitted in response to this notice will be summarized and/or included in the request for OMB approval. All comments will become a matter of public record. Comments are invited on: (a) Whether the collection of information is necessary for the proper performance of the functions of the agency, including whether the information shall have practical utility; (b) the accuracy of the agency's estimate of the burden of the collection of information; (c) ways to enhance the quality, utility, and clarity of the information to be collected; (d) ways to minimize the burden of the collection of information on respondents, including through the use of automated collection techniques or other forms of information technology; and (e) estimates of capital or start-up costs and costs of operation, maintenance, and purchase of services to provide information.

Approved: March 19, 2014.

R. Joseph Durbala,

IRS Reports Clearance Officer.

[FR Doc. 2014–07726 Filed 4–4–14; 8:45 am]

BILLING CODE 4830–01–P

DEPARTMENT OF THE TREASURY

Internal Revenue Service

Proposed Collection; Comment Request for Form 1065, 1065–X and schedules.

AGENCY: Internal Revenue Service (IRS), Treasury.

ACTION: Notice and request for comments.

SUMMARY: The Department of the Treasury, as part of its continuing effort to reduce paperwork and respondent burden, invites the general public and other Federal agencies to take this opportunity to comment on proposed and/or continuing information collections, as required by the Paperwork Reduction Act of 1995, Public Law 104–13 (44 U.S.C. 3506(c)(2)(A)). Currently, the IRS is soliciting comments concerning Form 1065 (U.S. Return of Partnership Income), 1065X (Amended Return or Administrative Adjustment Request), Schedule C (Additional Information for Schedule M–3 Filers), Schedule D (Capital Gains and Losses), Schedule K–1 (Partner's Share of Income, Credits, Deductions and Other Items), Schedule L (Balance Sheets per Books), Schedule M–1 (Reconciliation of Income (Loss) per Books With Income (Loss) per Return)), Schedule M–2 (Analysis of Partners' Capital Accounts), Schedule M–3 (Net Income (Loss) Reconciliation for Certain Partnerships), and Schedule B–1, Information on Partners Owning 50% or More of Partnerships).

DATES: Written comments should be received on or before June 6, 2014 to be assured of consideration.

ADDRESSES: Direct all written comments to Christie Preston, Internal Revenue Service, Room 6129, 1111 Constitution Avenue NW., Washington, DC 20224.

FOR FURTHER INFORMATION CONTACT: Requests for additional information or copies of the form(s) and instructions should be directed to Allan Hopkins, at Internal Revenue Service, Room 6129, 1111 Constitution Avenue NW., Washington DC 20224, or through the Internet, at *Allan.M.Hopkins@irs.gov*.

SUPPLEMENTARY INFORMATION:

Title: Form 1065 (U.S. Return of Partnership Income), 1065X (Amended Return or Administrative Adjustment Request), Schedule C (Additional

Information for Schedule M–3 Filers), Schedule D (Capital Gains and Losses), Schedule K–1 (Partner's Share of Income, Credits, Deductions and Other Items), Schedule L (Balance Sheets per Books), Schedule M–1 (Reconciliation of Income (Loss) per Books With Income (Loss) per Return)), Schedule M–2 (Analysis of Partners' Capital Accounts), Schedule M–3 (Net Income (Loss) Reconciliation for Certain Partnerships), and Schedule B–1, Information on Partners Owning 50% or More of Partnerships).

OMB Number: 1545–0099.

Form Number: 1065, 1065–X, Schedule C, Schedule D, Schedule K–1, Schedule L, Schedule M–1, Schedule M–2, Schedule M–3 and Schedule B–1.

Abstract: Internal Revenue Code section 6031 requires partnerships to file returns that show gross income items, allowable deductions, partners' names, addresses, and distribution shares, and other information. This information is used by the IRS to verify correct reporting of partnership items and for general statistics. The information is used by partners to determine the income, loss, credits, etc., to report on their tax returns.

Current Actions: There is no change in the paperwork burden previously approved by OMB. This form is being submitted for renewal purposes.

Type of Review: Extension of a currently approved collection.

Affected Public: Business or other for-profit organizations, farms, and individuals or households.

Estimated Number of Respondents: 22,184,092.

Estimated Time per Respondent: Varies.

Estimated Total Annual Burden Hours: 2,127,889.

The following paragraph applies to all of the collections of information covered by this notice:

An agency may not conduct or sponsor, and a person is not required to respond to, a collection of information unless the collection of information displays a valid OMB control number.

Books or records relating to a collection of information must be retained as long as their contents may become material in the administration of any internal revenue law. Generally, tax returns and tax return information are confidential, as required by 26 U.S.C. 6103.

Request for Comments: Comments submitted in response to this notice will be summarized and/or included in the request for OMB approval. All comments will become a matter of public record. Comments are invited on: (a) Whether the collection of information is necessary for the proper performance of the functions of the agency, including whether the information shall have practical utility; (b) the accuracy of the agency's estimate of the burden of the collection of information; (c) ways to enhance the quality, utility, and clarity of the information to be collected; (d) ways to minimize the burden of the collection of information on respondents, including through the use of automated collection techniques or other forms of information technology; and (e) estimates of capital or start-up costs and costs of operation, maintenance, and purchase of services to provide information.

Approved: April 2, 2014.

Christie Preston,

IRS Reports Clearance Officer.

[FR Doc. 2014–07732 Filed 4–4–14; 8:45 am]

BILLING CODE 4830–01–P

DEPARTMENT OF THE TREASURY

Internal Revenue Service

Proposed Collection; Comment Request for Revenue Procedure 2005–24/Notice 2006–15

AGENCY: Internal Revenue Service (IRS), Treasury.

ACTION: Notice and request for comments.

SUMMARY: The Department of the Treasury, as part of its continuing effort to reduce paperwork and respondent burden, invites the general public and other Federal agencies to take this opportunity to comment on proposed and/or continuing information collections, as required by the Paperwork Reduction Act of 1995, Public Law 104–13 (44 U.S.C. 3506(c)(2)(A)). The IRS is soliciting comments concerning information collection requirements related to Revenue Procedure 2005–24, waiver of spousal election, and Notice 2006–15, extension of June 28, 2005, safe harbor date.

DATES: Written comments should be received on or before June 6, 2014 to be assured of consideration.

ADDRESSES: Direct all written comments to Christie A. Preston, Internal Revenue Service, Room 6129, 1111 Constitution Avenue NW., Washington, DC 20224.

FOR FURTHER INFORMATION CONTACT: Requests for additional information or copies of the revenue procedure should be directed to Gerald J. Shields, LL.M. at Internal Revenue Service, Room 6129, 1111 Constitution Avenue NW., Washington, DC 20224, or through the internet at *Gerald.J.Shields@irs.gov.*

Title: Waiver of Spousal Election.

OMB Number: 1545–1936.

Revenue Procedure Number: Revenue Procedure 2005–24.

Abstract: Revenue Procedure 2005–24 provides notice to a husband or wife who has an interest in a Charitable Remainder Annuity Trust (CRAT) under section 664(d)(1) of the Internal Revenue Code or Charitable Remainder Unitrust (CRUT) under section 664(d)(2) that was created by his or her spouse where, under applicable state law, such spouse has a right to receive an elective share that could be satisfied with assets of the CRAT or CRUT. In cases where such a CRAT or CRUT is established after the date that is ninety days after the date this revenue procedure is published in the IRB, the husband or wife must waive the right to receive the elective share in order for the CRAT or CRUT to continue to qualify under section 664(d)(1)(b) or (d)(2)(B). Notice 2006–15 (2006–1 C.B. 501) extends the June 28, 2005, grandfather date in Revenue Procedure 2005–24 (2005–1 C.B. 909), until further guidance is issued by the Internal Revenue Service.

Current Actions: There are no changes being made to the revenue procedure or notice at this time.

Type of Review: Extension of a currently approved collection.

Affected Public: Business or other for-profit organizations, not-for-profit institutions, and state, local or tribal governments.

Estimated Number of Respondents: 100,000.

Estimated Time per Respondent: 1 hour 30 minutes.

Estimated Total Annual Burden Hours: 150,000.

The following paragraph applies to all of the collections of information covered by this notice:

An agency may not conduct or sponsor, and a person is not required to respond to, a collection of information unless the collection of information displays a valid OMB control number. Books or records relating to a collection of information must be retained as long as their contents may become material in the administration of any internal revenue law. Generally, tax returns and tax return information are confidential, as required by 26 U.S.C. 6103.

Request for Comments: Comments submitted in response to this notice will be summarized and/or included in the request for OMB approval. All comments will become a matter of public record. Comments are invited on: (a) Whether the collection of information is necessary for the proper performance of the functions of the agency, including whether the

information shall have practical utility; (b) the accuracy of the agency's estimate of the burden of the collection of information; (c) ways to enhance the quality, utility, and clarity of the information to be collected; (d) ways to minimize the burden of the collection of information on respondents, including through the use of automated collection techniques or other forms of information technology; and (e) estimates of capital or start-up costs and costs of operation, maintenance, and purchase of services to provide information.

Approved: March 24, 2014.

Christie A. Preston,

IRS Reports Clearance Officer.

[FR Doc. 2014–07724 Filed 4–4–14; 8:45 am]

BILLING CODE 4830–01–P

DEPARTMENT OF VETERANS AFFAIRS

[OMB Control No. (2900–NEW)]

Proposed Information Collection (Servicemember Group Life Insurance (SGLI) Disability Extension Application); Comment Request

AGENCY: Veterans Benefits Administration, Department of Veterans Affairs

ACTION: Notice

SUMMARY: The Veterans Benefits Administration (VBA), Department of Veterans Affairs (VA), is announcing an opportunity for public comment on the proposed collection of certain information by the agency. Under the Paperwork Reduction Act (PRA) of 1995, Federal agencies are required to publish notice in the **Federal Register** concerning each proposed collection of information, including each new collection, and allow 60 days for public comment in response to this notice. This notice solicits comments on the information needed by the Office of Servicemembers' Group Life Insurance to establish the insured's eligibility for the extension.

DATES: Written comments and recommendations on the proposed collection of information should be received on or before June 6, 2014.

ADDRESSES: Submit written comments on the collection of information through Federal Docket Management System (FDMS) at *www.Regulations.gov;* or to Nancy J. Kessinger, Veterans Benefits Administration (20M35), Department of Veterans Affairs, 810 Vermont Avenue NW., Washington, DC 20420 or email *nancy.kessinger@va.gov.* Please refer to ''OMB Control No. 2900—NEW (SGLI Disability Extension Application'' in any correspondence. During the comment period, comments may be viewed online through FDMS.

FOR FURTHER INFORMATION CONTACT: Nancy J. Kessinger at (202) 632–8924 or FAX (202) 632–8925.

SUPPLEMENTARY INFORMATION: Under the PRA of 1995 (Pub. L. 104–13; 44 U.S.C. 3501–3521), Federal agencies must obtain approval from the Office of Management and Budget (OMB) for each collection of information they conduct or sponsor. This request for comment is being made pursuant to Section 3506(c)(2)(A) of the PRA.

With respect to the following collection of information, VBA invites comments on: (1) Whether the proposed collection of information is necessary for the proper performance of VBA's functions, including whether the information will have practical utility; (2) the accuracy of VBA's estimate of the burden of the proposed collection of information; (3) ways to enhance the quality, utility, and clarity of the information to be collected; and (4) ways to minimize the burden of the collection of information on respondents, including through the use of automated collection techniques or the use of other forms of information technology.

Title: SGLI Disability Extension Application.

OMB Control Number: 2900—NEW.

Type of Review: New collection.

Abstract: SGLI covered members who are totally disabled when released or separated from such service are entitled to a free extension of their SGLI coverage for the period of their total disability or two years, whichever ends first. This form is needed prior to expiration of the regulatory time periods so that totally disabled Veterans can apply for this free insurance benefit as soon as possible and receive an extension of their SGLI coverage in order to protect their beneficiaries in the event of their death. The information requested is authorized by law, 38 U.S.C. 1966(a), 1967(a), 38 U.S.C. 1968 (a)(1)–(4).

Affected Public: Individuals or households.

Estimated Annual Burden: 2,083 hours.

Estimated Average Burden per Respondent: 25 minutes.

Frequency of Response: Once.

Estimated Number of Respondents: 5,000.

DATED: April 2, 2014.

By direction of the Secretary.

Crystal Rennie,

Department Clearance Officer, Department of Veterans Affairs.

[FR Doc. 2014–07664 Filed 4–4–14; 8:45 am]

BILLING CODE 8320–01–P

DEPARTMENT OF VETERANS AFFAIRS

[OMB Control No. 2900—NEW]

Agency Information Collection (Veterans Transportation Service Data Collection) Activities: Under OMB Review

AGENCY: Veterans Health Administration, Department of Veterans Affairs.

ACTION: Notice.

SUMMARY: In compliance with the Paperwork Reduction Act (PRA) of 1995 (44 U.S.C. 3501–3521), this notice announces that the Veterans Health Administration (VHA), Department of Veterans Affairs, will submit the collection of information abstracted below to the Office of Management and Budget (OMB) for review and comment. The PRA submission describes the nature of the information collection and its expected cost and burden and includes the actual data collection instrument.

DATES: Written comments and recommendations on the proposed collection of information should be received on or before May 7, 2014.

ADDRESSES: Submit written comments on the collection of information through *www.Regulations.gov,* or to Office of Information and Regulatory Affairs, Office of Management and Budget, Attn: VA Desk Officer; 725 17th St. NW., Washington, DC 20503 or sent through electronic mail to *oira_submission@omb.eop.gov.* Please refer to ''OMB Control No. 2900—NEW (Veterans Transportation Service Data Collection)'' in any correspondence. During the comment period, comments may be viewed online through the FDMS.

FOR FURTHER INFORMATION CONTACT: Crystal Rennie, Enterprise Records Service (005R1B), Department of Veterans Affairs, 810 Vermont Avenue NW., Washington, DC 20420, (202) 632–7492 or email *crystal.rennie@va.gov.* Please refer to ''OMB Control No. 2900–NEW (Bowel and Bladder Care Billing Form)'' in any correspondence.

SUPPLEMENTARY INFORMATION: Under the PRA of 1995 (Pub. L. 104–13; 44 U.S.C. 3501–3521), Federal agencies must obtain approval from the Office of

Management and Budget (OMB) for each collection of information they conduct or sponsor. This request for comment is being made pursuant to Section 3506(c)(2)(A) of the PRA.

With respect to the following collection of information, VHA invites comments on: (1) Whether the proposed collection of information is necessary for the proper performance of VHA's functions, including whether the information will have practical utility; (2) the accuracy of VHA's estimate of the burden of the proposed collection of information; (3) ways to enhance the quality, utility, and clarity of the information to be collected; and (4) ways to minimize the burden of the collection of information on respondents, including through the use of automated collection techniques or the use of other forms of information technology.

Titles: Veterans Transportation Service Data Collection

OMB Control Number: 2900—NEW (Veterans Transportation Service Data Collection).

Type of Review: New collection.

Abstract: The information collection is to ensure Veterans, Servicemembers, beneficiaries, caregivers and other persons receive timely and reliable transportation for the purpose of examination, treatment and care. VHA must identify the beneficiary, the dates and location required to plan a trip for scheduled or unscheduled appointments, and ensure reimbursement of beneficiary travel mileage is not paid for transportation provided through VTS. Information is also collected to facilitate overall evaluation of the effectiveness of the allocation of resources for VTS.

Affected Public: Individuals or households.

Estimated Annual Burden: 27,908 burden hours.

Estimated Average Burden Per Respondent: 5 minutes.

Frequency of Response: 3.32 (On Occasion).

Estimated Number of Respondents: 100,872.

Dated: April 1, 2014.

By direction of the Secretary.

Crystal Rennie,

VA Clearance Officer, U.S., Department of Veterans Affairs.

[FR Doc. 2014–07628 Filed 4–4–14; 8:45 am]

BILLING CODE 8320–01–P

DEPARTMENT OF VETERANS AFFAIRS

Veterans' Advisory Committee on Rehabilitation; Notice of Meeting

The Department of Veterans Affairs (VA) gives notice under the Federal Advisory Committee Act, 5 U.S.C. App. 2, that a meeting of the Veterans' Advisory Committee on Rehabilitation will be held on April 23, 2014, in Room 730 and April 24, 2014, in Room 530 at the Department of Veterans Affairs, 810 Vermont Avenue NW., Washington, DC. The meeting sessions will begin at 8 a.m. each day and adjourn at 5 p.m. on April 23 and at Noon on April 24. The meeting is open to the public.

The purpose of the Committee is to provide advice to the Secretary on the rehabilitation needs of Veterans with disabilities and on the administration of VA's rehabilitation programs.

During the meeting, Committee members will be provided updated briefings on various VA programs designed to enhance the rehabilitative potential of recently-discharged Veterans. Members will also begin consideration of potential recommendations to be included in the Committee's next annual report.

No time will be allocated at this meeting for oral presentations from the public. Interested parties should provide written comments for review by the Committee to Teri Nguyen, Designated Federal Officer, Veterans Benefits Administration (28), 810 Vermont Avenue NW., Washington, DC 20420, or via email at *Teri.Nguyen1@va.gov.* In the communication with the Committee, writers must identify themselves and state the organization, association or person(s) they represent. Because the meeting is being held in a government building, a photo I.D. must be presented at the Guard's Desk as a part of the clearance process should a member of the public wish to attend. Therefore, you should allow an additional 15 minutes before the meeting begins. Individuals who wish to attend the meeting should contact Teri Nguyen at (202) 461–9634.

Dated: April 1, 2014.

Rebecca Schiller,

Advisory Committee Management Officer.

[FR Doc. 2014–07590 Filed 4–4–14; 8:45 am]

BILLING CODE P

FEDERAL REGISTER

Vol. 79 Monday,

No. 66 April 7, 2014

Part II

Department of Transportation

National Highway Traffic Safety Administration

49 CFR Part 571

Federal Motor Vehicle Safety Standards; Rear Visibility; Final Rule

DEPARTMENT OF TRANSPORTATION

National Highway Traffic Safety Administration

49 CFR Part 571

[Docket No. NHTSA–2010–0162]

RIN 2127–AK43

Federal Motor Vehicle Safety Standards; Rear Visibility

AGENCY: National Highway Traffic Safety Administration (NHTSA), Department of Transportation (DOT).

ACTION: Final rule.

SUMMARY: To reduce the risk of devastating backover crashes involving vulnerable populations (including very young children) and to satisfy the mandate of the Cameron Gulbransen Kids Transportation Safety Act of 2007, NHTSA is issuing this final rule to expand the required field of view for all passenger cars, trucks, multipurpose passenger vehicles, buses, and low-speed vehicles with a gross vehicle weight of less than 10,000 pounds. The agency anticipates that today's final rule will significantly reduce backover crashes involving children, persons with disabilities, the elderly, and other pedestrians who currently have the highest risk associated with backover crashes. Specifically, today's final rule specifies an area behind the vehicle which must be visible to the driver when the vehicle is placed into reverse and other related performance requirements. The agency anticipates that, in the near term, vehicle manufacturers will use rearview video systems and in-vehicle visual displays to meet the requirements of this final rule.

DATES: *Effective Date:* This rule is effective June 6, 2014.

Compliance Date: Compliance is required, in accordance with the phase-in schedule, beginning on May 1, 2016. Full compliance is required on May 1, 2018.

Petitions for reconsideration: Petitions for reconsideration of this final rule must be received not later than May 22, 2014.

Incorporation by Reference: The incorporation by reference of certain publications listed in the standard is approved by the Director of the Federal Register as of June 6, 2014.

ADDRESSES: Petitions for reconsideration of this final rule must refer to the docket and notice number set forth above and be submitted to the Administrator, National Highway Traffic Safety Administration, 1200 New Jersey Avenue SE., Washington, DC 20590.

FOR FURTHER INFORMATION CONTACT:
For technical issues: Mr. Markus Price, Office of Vehicle Rulemaking, Telephone: 202–366–0098, Facsimile: 202–366–7002, NVS–121.
For legal issues: Mr. Jesse Chang, Office of the Chief Counsel, Telephone: 202–366–2992, Facsimile: 202–366–3820, NCC–112.
The mailing address for these officials is: National Highway Traffic Safety Administration, 1200 New Jersey Avenue SE., Washington, DC 20590.

SUPPLEMENTARY INFORMATION:

Table of Contents

I. Executive Summary
II. Background and Notice of Proposed Rulemaking
a. Cameron Gulbransen Kids Transportation Safety Act and National Traffic and Motor Vehicle Safety Act
b. Safety Problem
c. Advance Notice of Proposed Rulemaking
d. Notice of Proposed Rulemaking
e. Summary of Comments on the NPRM
f. Public Hearing and Workshop
g. Additional 2012 Research
h. Additional SCI Case Analysis
i. Updates to NCAP
III. Final Rule and Response to Comments
a. Summary of the Final Rule
b. Applicability
c. Alternative Countermeasures
d. Field of View
e. Image Size
f. Test Procedure
g. Linger Time, Deactivation, and Backing Event
h. Image Response Time
i. Display Luminance
j. Durability Testing
k. Phase-In
l. Remaining Issues
m. Effective Date
IV. Estimated Costs and Benefits
a. System Effectiveness
b. Benefits
c. Costs
d. Market Adoption Rate
e. Net Impact
f. Cost Effectiveness and Regulatory Alternatives
V. Regulatory Analyses
VI. Regulatory Text

I. Executive Summary

The Cameron Gulbransen Kids Transportation Safety Act of 2007 (''K.T. Safety Act'' or ''the Act'') directs this agency to amend Federal Motor Vehicle Safety Standard (FMVSS) No. 111 [1] ''to expand the required field of view to enable the driver of a motor vehicle to detect areas behind the motor vehicle to reduce death and injury resulting from backing incidents, particularly incidents involving small children and disabled persons.'' [2] In other words, the K.T. Safety Act requires that this agency conduct a rulemaking to amend FMVSS No. 111 in a manner so as to address a safety risk identified by Congress in the Act—namely, the risk of death and injury that can result from backover crashes. Further, the language chosen by Congress particularly directs the agency to consider crashes involving children and persons with disabilities.

With some variations, the requirements in today's final rule generally adopt the requirements proposed in the NPRM that expand the required field of view in FMVSS No. 111 to include a 10-foot by 20-foot zone directly behind the vehicle.[3] Today's final rule applies these requirements to all passenger vehicles, trucks, buses, and low-speed vehicles [4], with a gross vehicle weight rating (GVWR) of 10,000 pounds or less. Given the currently available information regarding the backover safety risk, the available backing aid technologies, etc., the agency believes that systems fulfilling the requirements adopted by today's final rule are the most effective and the most cost-effective systems available for meeting the safety need specified in the K.T. Safety Act. We believe that the systems meeting the requirements of today's rule also afford the best protection to children and persons with disabilities.

[1] FMVSS No. 111, currently titled ''Rearview mirrors'' is renamed by today's final rule as ''Rear visibility.''

[2] Cameron Gulbransen Kids Transportation Safety Act of 2007, (Public Law 110–189, 122 Stat. 639–642), § 4 (2007).

[3] Prior to adoption of today's rule, the required field of view for passenger vehicles specified that these vehicles have an inside rearview mirror that provides a view from 61 meters behind the vehicle to the horizon. Multipurpose passenger vehicles, trucks and buses with a GVRW of 4,536 kg or less may certify to the passenger car requirements or provide large planar outside mirrors on both the driver's side as well as the passenger's side that provide a view to the rear along the sides of the vehicle. Passenger cars are required to have a planar outside mirror on the driver's side that provides a view to the rear along the side of the vehicle. This rule does not change these field of view requirements from FMVSS No. 111, but adds additional requirements.

[4] A low-speed vehicle is defined as a 4-wheeled vehicle, with a GVWR of less than 3000 lbs, and whose speed attainable in 1 mile on a paved level surface is greater than 20 mph and no greater than 25 mph. *See* 49 CFR Part 571.3. Like all other vehicle types covered under today's final rule, LSVs are required to provide the driver with a rearview image meeting the requirements specified in the regulatory text at the end of this document regardless of whether the vehicle has any significant blind zone. However, like other manufacturers, low-speed vehicle manufacturers can petition NHTSA for an exemption or for rulemaking. The issue of how today's final rule applies to LSVs is discussed in further detail in Section III. b. Applicability, below.

Available Information Continues to Show that the NPRM Approach is the Best Approach

After the proposed rule, the agency received public comments through two separate comment periods and two public meetings. Further, the agency conducted additional research to ensure that the analysis supporting today's final rule is robust. While a significant amount of information has been obtained since the NPRM, none of the additional information supports the agency departing from the general approach proposed in the NPRM. The additional information is useful because it enables the agency to refine its understanding of the technical capabilities of the manufacturers to meet the requirements of today's rule and the relevant costs/benefits of today's rule. Nonetheless, among the various types of rear visibility systems available for study, agency testing and other currently available information support the following claims:

(1) Drivers using rear visibility systems meeting the field of view requirements of today's final rule avoid crashes with an unexpected test object at a statistically significant higher rate than drivers using the standard complement of vehicle equipment.

(2) Such systems (e.g., rearview video systems) consistently outperform other rear visibility systems (e.g., sensors-only or mirror systems) due to a variety of technical and driver-use limitations in those other systems.

(3) Rear visibility systems meeting the requirements of today's rule are the only systems that can meet the need for safety specified by Congress in the K.T. Safety Act (the backover crash risk) because the other systems afford little or no measureable safety benefit.

(4) Systems meeting the requirements of today's final rule are not only the most effective system at addressing the backover crash risk but also the most cost-effective.

Thus, NHTSA's believes that the rear visibility system requirements in today's final rule (expanding the required field of view to include the 20-foot by 10-foot zone immediately behind the vehicle) are the only method for addressing the backover safety risk identified in the K.T. Safety Act that is rationally supported by the totality of the available data.

Recent Market Developments Have Substantially Reduced Costs

The agency's latest analysis has shown that 73% of vehicles covered under today's final rule will be sold with rearview video systems by 2018. This new development in the market means that today's rule will require less change to the market than we had previously anticipated. Assuming the 73% market adoption rate, it would cost $546 to $620 million to equip the remaining 27% of vehicles in 2018 without a rear visibility system. Those systems would also produce $265 to $396 million in monetized benefits.

While we have data to demonstrate what we predict will be the state of the market in 2018, we are unable to determine with any reasonable certainty the precise extent to which other potential events (e.g., the K.T. Safety Act and the rulemaking process) beyond ''pure market forces'' might also be a factor. However, in order to reflect this uncertainty in estimating the likely benefits and costs, NHTSA considered different methods for establishing a baseline market adoption rate of rear visibility systems. The purpose of this analysis was to capture, in addition to the effects of issuing this final rule, the potential effects of the K.T. Safety Act (and the rulemaking process mandated by the Act) upon the rearview video system market adoption. While assessing different alternative baselines is useful in estimating these different market scenarios, all of these analyses continue to show that the approach adopted in today's final rule is the best approach for addressing the backover safety problem.

Accordingly, we have developed an analysis that presents a range of both the benefits and costs of this rule based on a range of adoption rates. At the top-end of the range of adoption rates is the assumption that all current and projected installations are due purely to market forces, meaning that 73% of the new vehicle fleet will be equipped with rearview video systems by 2018. At the low-end of the range of adoption rates, we adopt the assumption that half of the increase in the market adoption trend as a result of the data from MY2014 is attributable to ''pure market forces'' and half is not.[5] Assuming these top and low end estimated adoption trends, the market adoption attributable to ''pure market demand'' in 2018 would be between 59% and 73%. Assuming this range of market adoption, $546 million to $924 million in costs and $265 million to $595 million in monetized benefits are attributable to the final rule, the rulemaking process, and the K.T. Safety Act.

TABLE 1—ESTIMATED COSTS AND BENEFITS UNDER 59% AND 73% MARKET ADOPTION SCENARIOS

	73% Adoption	59% Adoption
Annual Benefits (2010 $)	$265 M to $396 M	$398 M to $595 M
Annual Costs (2010 $)	$546 M to $620 M	$827 M to $924 M

As described in detail, below, and in the Final Regulatory Impact Analysis (FRIA), the agency believes that the top-end assumption is both more likely than the low end (given the strong market incentives in providing rearview video systems) and presents a better picture of the results of issuing today's final rule. Accordingly, for ease of presentation, the discussions of the costs and benefits presented both in this preamble and the FRIA present only those numbers associated with this assumption. However, the agency does present detailed information concerning the costs and benefits of the low-end assumption in Section IV. D. of this preamble and (in more detail) Chapter VIII. D. of the FRIA.

Benefits Are Expected To Be Substantial

This rule is expected to decrease the risks to children, persons with disabilities, and other pedestrians from being injured or killed in a backover crash. Backover crashes are specifically defined as crashes where non-occupants of vehicles (such as pedestrians or cyclists) are struck by vehicles moving in reverse. Our assessment of available safety data indicates that (on average) there are 267 fatalities and 15,000 injuries (6,000 of which are incapacitating[6]) resulting from backover

[5] Further information about these alternative baselines is available in the Final Regulatory Impact Analysis accompanying this document in the docket referenced at the beginning of this document.

[6] The Manual on Classification of Motor Vehicle Traffic Accidents (ANSI D16.1) defines ''incapacitating injury'' as ''any injury, other than

Continued

crashes every year. Of those, 210 fatalities and 15,000 injuries [7] are attributable to backover crashes involving light vehicles (passenger cars, multipurpose passenger vehicles (MPVs), trucks, buses, and low-speed vehicles) with a GVWR of 10,000 pounds or less. Further, the agency has found that children and elderly adults are disproportionately affected by backover crashes. Our data indicate that children under 5 years old account for 31 percent of the fatalities each year, and adults 70 years of age and older account for 26 percent.

Rear visibility systems meeting the requirements of today's final rule are predicted to have an effectiveness of between 28 and 33 percent—substantially higher than other systems (e.g., sensor-only systems) that are currently available. Applying that estimated effectiveness to the latest information on the target population, the aforementioned systems are expected to save 58 to 69 lives each year (not including injuries prevented) once the entire on road vehicle fleet is equipped with systems meeting today's rules requirements (anticipated by approximately 2054).[8] However, because our latest information indicates that as much as 73% of new vehicles sold will have rearview video systems by 2018, the lives saved and injuries prevented by equipping the remaining 27% of vehicles are approximately a quarter of this total. Thus, we believe that there will still be 13–15 fatalities and 1,125–1,332 injuries prevented annually that are a result of equipping the remaining 27% of vehicles that we do not anticipate will have rear visibility systems by 2018.[9] While our estimated annual benefits, beginning in model year 2018, will not be fully realized until 2054, they will increase over time from the phase-in date as vehicles with these systems continue to make up an increasing percentage of the overall vehicle fleet. Taking into account that a larger portion of miles traveled by a given model year is achieved early in the overall life of that model year, we estimate that roughly two thirds of the lifetime benefits for MY2018 will be realized by 2028.

TABLE 2—ESTIMATED ANNUAL QUANTIFIABLE BENEFITS

Benefits	
Fatalities Reduced	13 to 15.
Injuries Reduced	1,125 to 1,332.

In addition to the fatalities and injuries prevented, systems meeting today's final rule are expected to yield benefits over the lifetime of the vehicle as a result of avoiding property damage. While damage to rear visibility systems are a potential source of additional repair cost as a result of rear-end collisions, the agency calculates that these costs will be offset by the benefits realized by vehicle owners as a result of avoiding property-damage-only backing collisions and yield a net benefit [10] between $10 and $13 per vehicle (over the lifetime of the vehicle). In monetary terms, the benefits that are a result from issuing today's final rule (i.e., not counting the systems already being installed by the automakers) are expected to be between $265 and $396 million annually when considering both fatalities/injuries prevented and the property-damage-only collisions avoided.

As the agency is conscious of the costs of today's rule and the costs of rear visibility systems in general, the agency has made every effort to ensure that the benefits of today's rule are as accurately estimated as possible. Thus, various new pieces of information have been incorporated into the analysis in today's final rule that lead to different benefits estimates from those in the NPRM. The major differences include a more refined target population estimate, updated voluntary installation rate information, and more refined system effectiveness estimates. As explained further in this document, additional data from our crash databases [11] enabled the agency to more accurately estimate the size of the target population by sampling a greater number of years of data. Further, new data regarding the rate of adoption of rear visibility systems has enabled the agency to project the rate of adoption through the first full compliance year in today's rule. Finally, the agency was able to conduct additional research since the NPRM to further examine driver use of rear visibility systems by examining a wider range of driver demographics and an additional vehicle type. The additional research adds to the robustness of the agency's analysis of rear visibility system effectiveness through a larger sampling of research participants. While none of the aforementioned new information creates a rational basis for the agency to alter its decision from the NPRM in any significant fashion, the agency believes that it was prudent to ensure that the benefits of today's rule are estimated as accurately as possible due to the costs of this rulemaking required under the K.T. Safety Act. The available information continues to show that rear visibility systems meeting the requirements of this rule are the most effective (and the most cost-effective) systems at addressing the backover safety problem.

Further, the agency notes that there continue to be substantial benefits of this rule that are not easily quantifiable in monetary terms. The agency recognizes that victims of backover crashes are frequently the most vulnerable members of our society (such as young children, the elderly, or persons with disabilities). As these persons often have special mobility needs or are too young to adequately comprehend danger, it seems unlikely that solutions such as increased public awareness or audible backing warnings will be sufficient to prevent the safety risk of backover crashes. Further, the agency recognizes that most people place a high value on the lives of

a fatal injury, which prevents the injured person from walking, driving or normally continuing the activities the person was capable of performing before the injury occurred'' (Section 2.3.4)

[7] Due to rounding, injuries for light vehicles and all vehicles are estimated to be 15,000.

[8] Like all new safety standards, benefits realized from these systems will rise steadily in proportion to the increase of new vehicles meeting the requirements adopted today within the vehicle fleet operating on the public roads. In other words, as new vehicles meeting the new standard replace older vehicles, more vehicles operating on the road will have the new safety countermeasure and more benefits will be realized. As with all standards, it takes time to replace the whole vehicle fleet. While the full rate of annual anticipated benefits will likely not be realized until 2054, the rate of annual benefits will rise each year commensurate with new vehicle sales and the proportion of the miles traveled in those new vehicles.

[9] This figure shows the incremental lives saved and injuries prevented by equipping the remaining 27% of vehicles that are not projected to have rear visibility systems in 2018. It compares what the data show will be the market position for adoption of rearview video systems by 2018 and the 100% compliance requirement in 2018 (established by today's final rule). Because this figure measures what we project the market would (in fact) be in 2018, it does not account for any potential market adoption that is attributable to manufacturers responding to events that are unrelated to ''pure market forces'' (e.g., the passage of the K.T. Safety Act or this rulemaking process). As further explained below, there are a number of reasons why it is especially difficult in the case of this rule to quantify the market adoption that is attributable to the K.T. Safety Act or this rulemaking process. However, we acknowledge that these events may have had an effect on the market adoption of rearview video systems and we have attempted to capture this potential effect below in section IV. *Estimated Costs and Benefits.*

[10] This ''net benefit'' is a comparison between the cost of repairing/replacing damaged rear visibility systems and the benefit of avoiding property damage-only crashes. The costs of the rear visibility system and other benefits of these systems are not taken into account in this ''net benefit.''

[11] The updates that we have incorporated into our analysis include updates to the Fatality Analysis Reporting System (FARS), the National Automotive Sampling System General Estimates System (NASS–GES), and the Not-in-Traffic Surveillance (NiTS) system.

children and that there is a general consensus regarding the need to protect children as they are unable to protect themselves. As backover crash victims are often struck by their immediate family members or caretakers, it is the Department's opinion that an exceptionally high emotional cost, not easily convertible to monetary equivalents, is often inflicted upon the families of backover crash victims.

Costs of Today's Final Rule

The agency acknowledges that the costs of today's rule are significant. We anticipate rear visibility systems will cost approximately $43 to $45 for vehicles already equipped with a suitable visual display and between $132 and $142 for all other vehicles. Accordingly, based on an annual new vehicle fleet of 16.0 million vehicles and considering the number of vehicles we anticipate will already have rear visibility systems by 2018, we believe the costs attributable to equipping the remaining 27% of vehicles (that are not projected to have rear visibility systems in 2018) will range from $546 to $620 million annually.[12]

TABLE 3—ESTIMATED INSTALLATION COSTS

Costs (2010 $)	
Full system installation per vehicle.	$132 to $142.
Camera-only installation per vehicle.	$43 to $45.
Total Fleet	$546 M to $620 M.

In addition to taking steps to ensure that the benefits of today's rule are accurately estimated, the agency also took steps to ensure that the estimated costs of this rule are accurate. Most importantly, two pieces of additional information have enabled the agency to arrive at a more refined estimate of the costs of today's rule that differ from the NPRM. First, the agency has a more robust estimate of the per unit costs of rear visibility systems meeting the requirements of today's rule because the agency performed a tear down study that analyzed the ''bolt-by-bolt'' costs of rear visibility systems and the agency incorporated an analysis of the production savings that occur over time due to efficiencies in the manufacturing process and increases in volume. Second, the aforementioned updated adoption rate of rear visibility systems has been incorporated not only in our analysis of the benefits but also of the costs of today's rule. Based on the aforementioned revised estimates for costs and benefits, the net cost per equivalent life saved for rear visibility systems meeting the requirements of today's final rule ranges from $15.9 to $26.3 million.

TABLE 4—ESTIMATED COST EFFECTIVENESS

Cost per Equivalent Life Saved	
Rearview Video Systems.	$15.9 to $26.3 million*.

*The range presented is from a 3% to 7% discount rate.

TABLE 5—SUMMARY OF BENEFITS AND COSTS PASSENGER CARS AND LIGHT TRUCKS (MILLIONS 2010$) MY2018 AND THEREAFTER[13]

Benefits	Primary estimate	Low estimate	High estimate	Discount rate (%)
Lifetime Monetized	$265	$305	$305	7
Lifetime Monetized	$344	$396	$396	3
Costs:				
Lifetime Monetized	$546	$620	$557	7
Lifetime Monetized	$546	$620	$557	3
Net Impact:				
Lifetime Monetized	−$281	−$315	−$252	7
Lifetime Monetized	−$202	−$224	−$161	3

This Rule is the Least Costly Rule that Meets the Requirements of the K.T. Safety Act

Throughout this rulemaking process, the agency has been sensitive to the costs of today's rule and has sought to ensure that the requirements adopted impose the least amount of regulatory burden on the economy while still achieving Congress' goal of reducing fatalities and injuries resulting from backover crashes. Thus, through the information received by the agency through the comment periods and public workshops, the agency has explored and adopted various methods in order to avoid imposing unnecessary regulatory burdens on the industry and to afford as much flexibility as possible.

Phase-in Schedule

To that end, today's final rule establishes a flexible phase-in schedule that affords the manufacturers the maximum amount of time permitted by the K.T. Safety Act to achieve full compliance (48 months after the publication of this rule). The phase-in schedule established by today's rule, excluding small volume and multi-stage manufacturers, is as follows:

- 0% of the vehicles manufactured before May 1, 2016;
- 10% of the vehicles manufactured on or after May 1, 2016, and before May 1, 2017;
- 40% of the vehicles manufactured on or after May 1, 2017, and before May 1, 2018; and
- 100% of the vehicles manufactured on or after May 1, 2018.[14]

[12] We note that the costs to low-speed vehicles are a small portion (less than 1%) of the vehicle fleet sales each year. We have assumed that the costs to low-speed vehicles to comply with the requirements of today's final rule are the same as other vehicles and taken those costs into account in this estimate.

[13] The different estimates in this chart show some of the different potential technology options. The Primary Estimate is the lowest installation cost option (which assumes manufacturers will use a 130° camera and will utilize any existing display units already offered in their vehicles). The Low Estimate and High Estimate provide the estimated *minimum and maximum net impacts* possible. The Low Estimate is the 180° camera and assumes that manufacturers will install a new display to meet the requirements of today's rule. It represents the minimum overall benefit estimate as it has the largest negative net impact. Conversely, the High Estimate is the 180° camera and assumes that manufacturers that currently offer vehicles with display units are able and choose to use those existing display units to meet the requirements of today's rule. This represents the maximum overall benefit estimate because it has the smallest negative net impact.

[14] As further discussed below, the latest data show that the adoption rate of rearview video systems has increased significantly in recent years. As a result, we anticipate that many manufacturers will be able to meet the phase-in schedule with little adjustment to their current manufacturing plans.

In addition to affording manufacturers the maximum amount of time permitted under the K.T. Safety Act to achieve full compliance, the agency adopts the back-loaded phase-in schedule proposed in the NPRM and does not separately evaluate light trucks and passenger cars for the purposes of the phase-in in order to further increase flexibility.

Further, the agency learned from the comments that, while the rearview video systems currently used by manufacturers are able to meet most of the requirements established in today's rule, they may not meet the entire set of requirements beyond the field of view requirements including the image size, linger time, response time, durability, and deactivation requirements. While the agency continues to believe that those requirements are essential in ensuring the quality of rear visibility systems in the long run, today's final rule does not require that manufacturers comply with the requirements beyond the field of view for purposes of the phase-in period. In making this decision, the agency notes that the estimated benefits from the NPRM would not be significantly affected by the delayed phase-in of certain requirements, as those estimates were based on research conducted using rear visibility systems that were not designed to conform to all of the aforementioned performance requirements. In addition, we have considered the significant additional costs in compelling manufacturers to conduct equipment redesigns outside of the normal product design cycle. In order to avoid significantly increasing the cost of this rule and to enable manufacturers to focus resources, instead, on deploying rear visibility systems in a greater number of vehicles in the near term, today's final rule delays the aforementioned requirements until the end of the 48 month phase-in period.

Response Time Test Procedure and the ''Backing Event''

As with the phase-in schedule, the agency received various comments regarding the timing of the presentation of the rearview image to the driver that suggested approaches that would tend to decrease the costs and increase flexibility for manufacturers while still preserving ability of the required rear visibility systems to address the backover safety problem. While today's rule adopts the proposal from the NPRM requiring rear visibility systems to display an image of the required field of view to the driver within 2.0 seconds after the driver places the vehicle in the reverse direction, the agency learned through the comments received that this requirement can be more burdensome for manufacturers if the system response time is tested immediately after the vehicle is started. Thus, as described further in this document, the agency has adopted a test procedure in today's final rule to condition the vehicle prior to evaluating rear visibility system response time. As this test procedure is based on the available data on real world driving conditions, the procedure affords manufacturers additional flexibility to design the initialization process for their rear visibility systems while still ensuring that the required rearview image is available at a time that is useful to a driver conducting backing maneuvers.

Further, today's final rule adopts a ''backing event'' definition in order to afford manufacturers additional design flexibility while still addressing the safety concerns that the agency intended to address with the proposed linger time and deactivation requirements in the NPRM. As further described in this document, the agency proposed linger time and deactivation requirements in the NPRM in order to ensure that the required rearview image is available to the driver at the appropriate time without becoming a distraction at an inappropriate time. Through the comments, the agency learned that the relatively inflexible linger time and deactivation requirements proposed in the NPRM could inhibit other safety and convenience features from being implemented by manufacturers (e.g., views designed to assist trailer hitching, parking, etc.). Thus, today's final rule adopts a definition of ''backing event'' and uses this definition to establish the points in time that the rearview image is required to be presented to the driver while still affording manufacturers the flexibility to implement additional safety and convenience features for the drivers.

Durability Testing and Luminance Requirements

Finally, the agency also modified the durability requirements to apply on a component level and did not adopt the luminance requirements to avoid imposing unnecessary testing burdens on the manufacturers where such burdens were not likely to produce a corresponding safety benefit. Through the comments received, the agency learned that ensuring a minimum level of durability of rear visibility system components can be achieved through component level testing rather than testing at the vehicle level. Further, the agency learned that luminance requirements alone would not ensure the quality of the image provided to the driver and would instead unnecessarily restrict the technologies that manufacturers can use to present the required rearview image to the driver. Thus, as further discussed in this document, the agency adopts the durability requirements from the NPRM at a component level and does not adopt the luminance requirements in today's final rule.

Other Methods to Reduce Costs and Increase Flexibility Do Not Fulfill the K.T. Safety Act

While the agency has made the aforementioned changes to the requirements proposed in the NPRM that are aimed at reducing costs while still preserving the safety benefits of today's rule, other methods to reduce costs that were explored (or suggested in the comments received) are not adopted in today's final rule because they do not meet the need for safety (and do not meet the requirements of the K.T. Safety Act).

Requiring a Lower-Cost Countermeasure or Utilizing More Performance-Oriented Standards

Throughout this rulemaking process, the agency has explored various countermeasure technologies and evaluated their ability to address the backover safety problem as required by the K.T. Safety Act. The agency conducted research to evaluate the effectiveness of various currently available technologies including additional mirrors, reverse sensors, and rearview video systems. After extensive testing, the agency concluded that drivers require the ability to see the area directly behind the vehicle in order to successfully avoid striking a pedestrian or an unexpected obstacle. In other words, rear visibility systems meeting the requirements of today's rule are the only currently available systems that can meet the need for safety specified by Congress in the K.T. Safety Act (backover crashes). The agency arrived at this conclusion after observing in our research that sensor-only systems have various technical limitations that lead to inconsistent object detection and that drivers with sensor-only systems generally either failed to respond to the sensor system's audio warning, or paused only momentarily before resuming the backing maneuver. Further, our research indicates that drivers were unable to avoid targets behind the vehicle when assisted with additional rear-mounted mirrors such as rear convex ''look-down'' or cross-view mirrors. We concluded that the limited field of view and significant distortion/

minification in such mirrors prevent drivers from successfully detecting and avoiding targets behind the vehicle. As these sensor-only and mirror-based rear visibility systems have demonstrated little to no success in inducing drivers to stop a backing maneuver to avoid a crash with a pedestrian behind the vehicle, their lower cost is outweighed by the substantially reduced benefits that are likely to be achieved by these systems. Thus, the agency believes that rear visibility systems meeting the requirements of today's rule are not only the most effective systems at addressing the backover safety problem but also the most cost effective system. Further, to adjust the requirements in today's rule to accommodate these other systems would not fulfill the requirements of the K.T. Safety Act as these other systems cannot be reasonably expected to address the backover crash problem.

Consistent with the requirements of the Motor Vehicle Safety Act, today's final rule establishes ''a minimum standard for motor vehicle or motor vehicle equipment performance.'' [15] While we acknowledge some commenters' desire for a more performance-oriented approach to the backover safety problem, we conclude that today's final rule is as performance-oriented as possible while still achieving the Motor Vehicle Safety Act's requirement that Federal Motor Vehicle Safety Standards ''meet the need for safety.'' [16] As Congress recognized when it enacted the Motor Vehicle Safety Act,[17] there is no clear distinction between standards that regulate performance versus those that regulate design. All safety standards necessarily will affect and preclude certain designs because the design of vehicles and equipment affects the quality of their performance. The extent to which a safety standard will restrict particular design is purely a matter of degree.[18] Thus, to fulfill all the applicable statutory requirements, the agency designs requirements to be as broad (i.e., performance-oriented) as possible without hindering the standard's ability to ''meet the need for safety.'' Our decisions in today's final rule follow this strategy. As we discuss in detail in Section III, below, the available data show that providing a driver with a view of the area behind the vehicle is currently the most effective way available to reduce backover crashes, as contemplated by the K.T. Safety Act. Thus, while today's rule requires systems to show a rearview image to the driver (in order to meet the need for safety), the rule uses performance-oriented requirements to enable manufacturers flexibility in determining how to present that image to drivers.

We further note, as we did in the NPRM, that technology is rapidly evolving. Thus, while today's final rule concludes that the most effective and currently available systems present the driver with a rearview image, the final rule does not require that a specific technology be used to provide a driver with an image of the area behind the vehicle, nor does today's rule preclude manufacturers from providing additional countermeasure technologies to supplement the required rear visibility system.

Applying Requirements by Vehicle Type

Further, the comments suggested, and the agency considered, the possibility of applying the rear visibility system requirements of today's rule by vehicle type. However, today's rule does not prescribe different requirements by vehicle type and applies the rear visibility requirements to all motor vehicles with a GVWR less than 10,000 pounds (except motorcycles and trailers) as directed by the K.T. Safety Act. As described above, the available data does not show that other currently available rear visibility systems (not meeting the requirements in today's rule) are able to effectively address the backover safety risk that the agency is required to address under the K.T. Safety Act. Thus, to apply different requirements by vehicle type in this rulemaking would mean applying the requirements of today's rule to only certain vehicle types and excluding others.

The agency does not believe that it can exclude any vehicle types covered by the K.T. Safety Act from this rule. While the K.T. Safety Act affords the agency discretion to apply different requirements to different vehicle types, the Act does not allow the agency to exclude (and apply no requirements to) any vehicle type covered by the K.T. Safety Act. Further, as discussed further in this preamble, the available data indicate that all vehicle types suffer from significant rear blind zones and contribute to backover crashes at a rate that is similar to their proportion of the vehicle fleet.[19] Thus, to exclude vehicles covered under the K.T. Safety Act from the requirements in today's rule would not only fail to meet the requirements of the K.T. Safety Act, but would also fail to address the backover safety need. As the vehicles covered by the K.T. Safety Act contribute proportionally to backover crashes resulting in an injury or a fatality, the agency believes that it is reasonable to apply the requirements of today's rule to all vehicles with a GVWR under 10,000 pounds (except motorcycles and trailers).

Conclusion

Given the requirements of the K.T. Safety Act and the National Traffic and Motor Vehicle Safety Act (''Vehicle Safety Act''), the totality of the available data continue to show that rear visibility systems meeting the requirements in today's final rule are the most effective and the most cost-effective countermeasure available to address the backover safety problem identified by Congress in the K.T. Safety Act. Data from agency testing and other currently available information continue to show that drivers using rearview video systems experience a statistically significant beneficial effect in avoiding a collision with an unexpected rear obstacle. As the agency seeks to achieve the goals of the K.T. Safety Act in the least burdensome fashion, the agency has made various modifications to the requirements in today's final rule. However, this final rule adopts the requirement from the NPRM that the driver must be afforded a view of the 20-foot by 10-foot zone directly behind the vehicle. The data continue to show that rear visibility systems with this characteristic are the most effective solution available to address the backover safety problem that the agency is required to address under the K.T. Safety Act. To adopt requirements allowing countermeasures without this

[15] *See* 49 U.S.C. 30102(a)(9).

[16] *See* 49 U.S.C. 30111(a).

[17] For example, Senator Magnuson recognized that standards are not either performance standards or design standards (i.e., there is not a dichotomy between the two) when he said that some safety standards would necessarily determine the configuration of some vehicle components. *See* 112 C.R. 20600 (Aug. 31, 1966).

[18] Courts have also recognized the difficulty in applying the distinction between performance and design standards in concrete situations (because specifying performance often entails restrictions on design) and did not invalidate safety standards based on their indefinite place on the conceptual spectrum between performance and design. *See Washington* v. *Dept. of Transp.,* 84 F.3d 1222, 1224–25 (10th Cir. 1996) (citing *Wood* v. *General Motors Corp.,* 865 F.2d 395, 416–17 (1st Cir. 1988); *Chrysler Corp.* v. *Department of Transp.,* 515 F.2d 1053515 F.2d at 1058–59 (6th Cir. 1975)).

[19] As discussed further in this document, all vehicles contribute to backover crashes at a rate that's similar to their proportion of the fleet. For example, passenger cars comprise 57% of the vehicle fleet and are responsible for 52% of backover injuries. Utility vehicles are 17% of the fleet and are responsible for 16% of the backover injuries. Vans are 10% of the fleet and responsible for 11% of the backover injuries. Pickup trucks are 16% of the fleet and responsible for 14% of the injuries. However, some vehicle types contribute to more fatalities than other vehicle types.

characteristic or applying the requirements in this rule to only a subset of the vehicle types specified in the K.T. Safety Act would not fulfill the requirements of that Act.

Throughout this rulemaking process the agency has been sensitive to the potential costs of today's rule and has explored multiple potential methods for reducing the potential burden of today's rule. Although the additional information received by the agency since the NPRM affords the agency a more refined understanding of the potential costs and benefits of today's rule, no comments or research data received provide the agency with a rational basis to adopt requirements that would permit rear visibility systems other than those permitted in today's rule. While the costs of the rule exceed its quantifiable benefits, Executive Orders 12866 and 13563 call upon us to assess the costs and benefits of a rulemaking, including those costs and benefits that are difficult to quantify and, unless prohibited by statute, choose the regulatory alternative that maximizes net benefits. Further, to the extent permitted by law, regulations must be designed in the most cost-effective manner to achieve the regulatory objective. As summarized later in this document and explained in detail in the accompanying Final Regulatory Impact Analysis, the agency has carefully considered all impacts of this rule and has chosen the most cost-effective option in meeting the statutory mandate. All available information and agency analysis continues to demonstrate that rear visibility systems meeting the requirements of today's rule are the most effective, least burdensome, and most cost-effective systems that can address the backover safety risk and fulfill the requirements of the K.T. Safety Act. Thus, the agency has chosen the most cost-effective means of achieving Congress's purpose in enacting the K.T. Safety Act. Moreover, as detailed in the NPRM and again discussed here in this final rule, the Department maintains that there are significant unquantifiable considerations associated with this rule, in particular the young age of many victims and the fact that many drivers involved in backover crashes are relatives or caretakers of the victims, that support this action.

II. Background and Notice of Proposed Rulemaking

a. Cameron Gulbransen Kids Transportation Safety Act and National Traffic and Motor Vehicle Safety Act

General Requirements

Subsection 2(b) of the K.T. Safety Act directs the Secretary of Transportation to initiate rulemaking to revise FMVSS No. 111 to expand the required field of view so as to enable drivers of motor vehicles to detect areas behind the motor vehicle. In the same section, Congress explained that the purpose of this requirement is to reduce death and injury resulting from backover crashes—especially crashes involving young children and disabled persons. The Act permitted the Secretary to prescribe different requirements for different vehicle types. It further allowed the Secretary to achieve the goals of the Act through the provision of additional mirrors, sensors, cameras, or other technology that could expand the driver's field of view.

The K.T. Safety Act did not intend to cover all motor vehicles that are regulated under the Vehicle Safety Act.[20] While subsection 2(e) of the K.T. Safety Act defines the term ''motor vehicle,'' for its purposes, as all vehicles covered under the Vehicle Safety Act, it specifically excludes all vehicles with a gross vehicle weight rating greater than 10,000 pounds, motorcycles, and trailers.

Given that subsection 2(b) prescribes amendments to a Federal motor vehicle safety standard, this rulemaking is governed not only by the K.T. Safety Act, but also by the requirements of the Vehicle Safety Act. The relevant provisions in the Vehicle Safety Act are those in section 30111 of title 49 of the United States Code. Section 30111 states that the Secretary of Transportation shall prescribe motor vehicle safety standards. Each standard shall be practicable, meet the need for motor vehicle safety, and be stated in objective terms. When prescribing a motor vehicle safety standard under this chapter, the Secretary shall consider relevant available motor vehicle safety information; consult with appropriate State or interstate authorities (including legislative committees); consider whether a proposed standard is reasonable, practicable, and appropriate for the particular type of motor vehicle or motor vehicle equipment for which it is prescribed; and consider the extent to which the standard will carry out the purposes of the Vehicle Safety Act.

Deadlines

Congress enacted the K.T. Safety Act on February 28, 2008. The Act directed the Secretary to initiate rulemaking to amend FMVSS No. 111 within 12 months of enactment (February 28, 2009). The Act further directed the Secretary to publish a final rule amending FMVSS No. 111 within 36 months of enactment (February 28, 2011). In the event that any of the aforementioned deadlines could not be met, subsection 4 required the Secretary to establish a new deadline and notify the Committee on Energy and Commerce of the House of Representatives and the Committee on Commerce, Science and Transportation of the Senate of the new deadlines and the reasons the deadlines specified in the Act could not be met.

On February 25, 2011, the agency determined that the deadline for publication of today's final rule could not be met and the Secretary sent notice to the Committee on Energy and Commerce of the House of Representatives and the Committee on Commerce, Science and Transportation of the Senate as required by the K.T. Safety Act.[21] While the NPRM was published on December 7, 2010 and provided for a 60-day comment period, the agency determined that an additional 45-day comment period would be necessary. The agency informed Congress of its intent to hold a public hearing and technical workshop in order to facilitate the exchange of ideas over the backover safety problem. The agency also stated that additional time was required in order to analyze the information acquired in these two public meetings. Thus, as required by the K.T. Safety Act, the Secretary sent the aforementioned notification and established December 31, 2011 as the new deadline.

However, due to the large volume of comments and the complexity of the issues discussed in this rulemaking, the Secretary determined that more time was necessary to complete the final review process. Thus, the Secretary sent additional notifications to the required committees establishing the new deadline of February 29, 2012.[22] A subsequent deadline of December 31, 2012 was established on February 28, 2012 when the Secretary sent additional notifications to the required committees

[20] The Vehicle Safety Act defines a ''motor vehicle'' as ''a vehicle driven or drawn by mechanical power and manufactured primarily for use on public streets, roads, and highways, but does not include a vehicle operated only on a rail line.'' 49 U.S.C. 30102(a)(6)

[21] Docket No. NHTSA–2010–0162–0148.

[22] Docket No. NHTSA–2010–0162–0230.

explaining that further research and analysis would be necessary in order to ensure that the final requirements are as efficient and protective as possible.[23] Specifically, the letter noted that additional analysis and/or research of a wider range of driver and vehicle types would help to ensure that the final rule is appropriate and that the underlying analysis is robust. As further described below, the agency conducted additional research and analysis to expand the vehicle, driver, and obstacle presentation methods.

While the agency completed this additional research in 2012, the Secretary determined that additional time would be necessary to finalize this rule and sent the notifications to the required committees under the K.T. Safety Act establishing a deadline of January 2, 2015.[24] Given that vehicles with rearview video systems are increasingly prevalent in the light vehicle fleet, we believed that additional analysis of crashes investigated by the Special Crash Investigations program would contribute significantly to our understanding of the backover crash problem. More specifically, the agency attempted to identify and analyze crashes involving vehicles with rearview video systems in order to refine further its understanding of how the proposed requirements address the real world safety risk.

As further discussed below, the agency could not identify as many cases for analysis as it hoped (potentially because rearview video systems are already having an impact on reducing backover crashes). Only two cases involving vehicles with rearview video systems could be identified and these cases are analyzed in the sections that follow. However, due to the lack of available cases, the agency believes that further delay of the rule is unlikely to yield much additional information for analysis. Thus, after considering these new facts along with the safety implications of further delay, the Department has decided that it is appropriate to issue today's final rule at this time—before the January 2, 2015 deadline.

Phase-in

In addition to these requirements, the K.T. Safety Act required that the safety standards prescribed pursuant to the Act establish a phase-in period for compliance. The Act further required that the phase-in period prescribe full compliance with the aforementioned safety standards no later than 48 months after issuance of the final rule. The K.T. Safety Act instructed the Secretary to consider whether to require a phase-in schedule based on vehicle type according to data regarding the frequency of backover incidents for each vehicle type.

b. Safety Problem

Definition of the Backover Problem and Summary of the Available Data

In the ANPRM and NPRM, we specifically described a backover as a type of incident, in which a non-occupant of a vehicle (e.g., a pedestrian or cyclist) is struck by a vehicle moving in reverse. As a majority of backover crashes occur off of public roadways, NHTSA's traditional methodologies for collecting data as to the specific numbers and circumstances of backover incidents could not give the agency a complete picture of the scope and circumstances of these types of incidents. Thus, in addition to statistics from traditional sources such as FARS[25] and NASS–GES[26], our research has utilized information from the ''Not-in-Traffic Surveillance'' (NiTS) system which collects information about all non-traffic crashes, including non-traffic backing crashes. Based on the aforementioned sources, NHTSA estimated that backing crashes of all types result in approximately 410 fatalities and 42,000 injuries each year. Of those, the subset of backover crashes (crashes involving non-occupants of vehicles such as pedestrians and cyclists) comprises 267 fatalities and 15,000 injuries.

Of these backover crashes, not all involve the vehicle types contemplated by Congress in the K.T. Safety Act (cars, trucks, MPVs, and vans with GVWR of 10,000 pounds or less). When only these vehicles are taken into account, the data indicate that a total population of 210 fatalities and 15,000 injuries[27] are due to light vehicle backover crashes.[28] However, the data are less clear when examining the distribution of backover crashes by vehicle type. Table 6 illustrates that pickup trucks and MPVs are statistically overrepresented in backover fatalities when compared to all non-backing traffic injury crashes and to their proportion of the vehicle fleet with a GVWR of less than 10,000 pounds. Our analysis revealed that while these vehicle types were statistically overrepresented in backover-related fatalities, they were not significantly overrepresented in backover crashes generally. In other words, these data indicate that while these types of vehicles are proportionately involved in backover crashes, those involving light trucks and sport utility vehicles are more likely to be fatal.

[23] Docket No. NHTSA–2010–0162–0231.

[24] Docket No. NHTSA–2010–0162–0251.

[25] The Fatality Analysis Reporting System (FARS) is a nationwide census that provides yearly data regarding fatal injuries suffered in motor vehicle traffic crashes. *See* NHTSA, NCSA Reports and Publications, *http://www.nhtsa.gov/FARS.*

[26] The National Automotive Sampling System General Estimates System (NASS–GES) is a nationally representative sample of police reported motor vehicle crashes. *See* NHTSA, NASS General Estimates System, *http://www.nhtsa.gov/NASS.*

[27] Due to rounding, injuries for both light vehicles and all vehicles are estimated to be 15,000.

[28] *See* Final Regulatory Impact Analysis, available in the docket number referenced at the beginning of this document.

TABLE 6—PASSENGER VEHICLE BACKOVER FATALITIES AND INJURIES BY VEHICLE TYPE [29]

Backing vehicle type	Fatalities	% of Fatalities	Estimated injuries	Estimated % of injuries	% of Non-Backing crashes	% of Fleet
Car	59	28	8,000	52	58	57
Utility Vehicle	56	27	2,000	16	18	17
Van	23	11	2,000	11	7	10
Pickup	68	33	2,000	14	15	16
Other Light Vehicle	3	2	1,000	7	2	0
Passenger Vehicles	210	100	15,000	100	100	100

Source: FARS 2007–2011, NASS–GES 2007–2011, NiTS 2007–2011.
Note: Estimates may not add up to totals due to independent rounding.

Our data further indicated that young children under the age of 5 and adults over the age of 70 are disproportionately represented in passenger vehicle backover crashes. Table 7 details the ages for fatalities and injuries for backover crashes involving all vehicles as well as those involving passenger vehicles only. It also details the proportion of the U.S. population in each age category from the 2007 U.S. Census Bureau's Population Estimates Program for comparison. When restricted to backover fatalities involving passenger vehicles, children under 5 years old account for 39 percent of the fatalities and adults 70 years of age and older account for 29 percent.

TABLE 7—ALL BACKOVER CRASH FATALITIES AND INJURIES BY VICTIM AGE [30]

Age of victim	Fatalities	Percent of fatalities	Estimated injuries	Estimated % of injuries	Percent of population
All Vehicles					
Under 5	84	31	1,000	6	7
5–10	8	3	1,000	4	7
10–19	4	1	1,000	9	14
20–59	73	27	7,000	49	55
60–69	27	10	2,000	11	8
70+	70	26	3,000	20	9
Unknown	2	1	*0	1	
Total	267	100	15,000	100	100
Passenger Cars					
Under 5	82	39	1,000	6	7
5–10	8	4	1,000	4	7
10–19	1	1	1,000	9	14
20–59	38	18	7,000	48	55
60–69	19	9	2,000	11	8
70+	61	29	3,000	21	9
Unknown	1	0	*0	1	
Total	210	100	15,000	100	100

Note: * indicates estimate less than 500, Estimates do not add up to totals due to independent rounding.
Note: Source: US Census Bureau, Population Estimates Program, 2007 Population Estimates; FARS 2007–2011, NASS–GES 2007–2011, NiTS 2007–2011.

In addition, we examined the data specifically in regards to children under the age of 5. Table 8 (below) presents passenger vehicle backover fatalities by year of age for victims less than 5 years old. Out of all backover fatalities involving passenger vehicles, 24 percent (49 out of 210) of victims are 1 year of age and younger.

TABLE 8—BREAKDOWN OF BACKOVER CRASH FATALITIES INVOLVING PASSENGER VEHICLES FOR VICTIMS UNDER AGE 5 YEARS [31]

Age of victim (years)	Percent of fatalities
0	2
1	59
2	21
3	11
4	7
Total	100

Source: US Census Bureau, Population Estimates Program, 2007 Population Estimates; FARS 2007–2011, NASS–GES 2007–2011, NiTS 2007–2011

[29] *Id.*

[30] *Id.*

[31] *Id.*

Separately, the agency also examined the FARS and NASS–GES data from 2007–2010 in order to determine whether or not any persons with disabilities were involved in backover crashes. During the four-year period between 2007 and 2010, the agency identified one case in the FARS database involving a vision-impaired pedestrian where the backover crash resulted in a fatality. When examining the same timeframe, the agency identified two backover cases in the NASS–GES database that involved persons in wheelchairs that resulted in injuries. Under both databases, the agency found other cases where the individual was specified as ''impaired'' (1 in FARS, and 11 in NASS–GES). While the agency cannot identify the specific type of ''impairment'' that the individual had at the time of the backover crash, these individuals may have had a disability (permanent or temporary) at the time of the backover crash.[32]

Special Crash Investigation of Backover Crashes

As reported in the ANPRM and the NPRM, NHTSA conducted an analysis of police-reported backover crashes through a Special Crash Investigation (SCI) program during the earlier stages of this rulemaking. The SCI program operates by receiving notifications of potential backover cases from several different sources including media reports, police and rescue personnel, contacts within NHTSA, reports from the general public, as well as notifications from the NASS. For purposes of that analysis of SCI cases, an eligible backover case was defined as a crash in which a light passenger vehicle's back plane strikes or passes over a person who is either positioned to the rear of the vehicle or is approaching from the side. These cases investigated were more likely to be cases involving children—however, some cases did involve adults. The majority of notifications received did not meet the criteria for case assignment. Typically, the reasons for not pursuing further include: (1) The reported crash configuration is outside of the scope of the program; (2) minor incidents with no fatally or seriously injured persons; or (3) incidents where cooperation cannot be established with the involved parties. As an example, many reported incidents are determined to be side or frontal impacts, which were not investigated for the purposes of this rulemaking. The agency was less likely to investigate a case involving an adult unless the adult was seriously injured or killed or if the backing vehicles were equipped with backing or parking aids.[33]

The agency conducted these investigations because the special crash investigations enhance the agency's understanding of the different circumstances that can lead to a backover crash. As the SCI cases revealed, there are a number of variables that can lead to a backover crash. NHTSA completed special crash investigations of 58 backover cases.[34] The 58 backing vehicles in these cases comprised 18 passenger cars, 22 MPVs, 5 vans (including minivans) and 13 pickup trucks. For cases in which an estimated speed for the backing vehicle was available, the speed of the backing vehicle ranged between approximately 0.62 and 10 mph. Of the 58 SCI backover cases, the vast majority (55) occurred in daylight conditions. Further, half of the cases investigated by NHTSA involved a non-occupant fatality.

In the cases investigated by NHTSA, most of the victims were either children (who were too short to be seen behind the vehicle), or adults who had fallen or were bent over and were also thus not in the driver's field of view. Specifically, 51 of the cases involved children (ranging in age from less than 8 months old up to 13 years old) who were struck by vehicles.[35] Of the 8 adult victim cases investigated by NHTSA, 4 were in an upright posture either standing or walking. Of the remaining four adult victims documented in the SCI cases, one was bending over behind a backing vehicle to pick up something from the ground, one was an elderly person who had fallen down in the path of the vehicle prior to being run over, and the postural orientation of the remaining two was unknown.

Based on NHTSA's analysis of the quantitative data and narrative descriptions of how the 58 SCI-documented backover crashes transpired, NHTSA estimated the general path that the victim took prior to each backover crash. We note that this analysis is unable to identify the victim's location, speed, and trajectory at a time that is relevant to the backover crash (i.e., after the vehicle has begun the backing maneuver). However, this analysis does enhance the agency's understanding of the varied circumstances that can lead to a backover crash. The breakdown of the victim's path of travel prior to being struck is as follows: 41 were approaching from the right or left of the vehicle at some point in time prior to being struck by the vehicle, 12 were in the path of the backing vehicle, 4 were unknown, and one was ''other.''

Subsequent to the ANPRM, NHTSA further analyzed these SCI backover cases to assess how far the vehicle traveled before striking the victim. Distances traveled for the cases investigated by NHTSA ranged from 1 to 75 feet. Overall, as shown in Table 9 below, this analysis showed that in 77 percent of the real-world, SCI backover cases investigated by NHTSA, the vehicle traveled less than 20 feet. While the subset may or may not be nationally representative of all backing crashes, we believe this information from the SCI cases is useful in the development of a required visible area and the associated development of a compliance test.

[32] The FARS and NASS–GES coding system has a separate category for individuals that were alcohol-impaired. However, the FARS and NASS–GES coding system does not differentiate between persons that have physical disabilities (e.g., individuals using crutches) and persons impaired by substances that are not alcohol (e.g., wrong dosage of medication). Thus, while persons with temporary or permanent disabilities could be included in this category, the database information is not specific enough for the agency to determine what portion of these persons had a physical disability at the time of the backover crash.

[33] The SCI cases reviewed by NHTSA are available in the SCI Electronic Case Viewer at *http://www.nhtsa.gov/SCI.*

[34] While NHTSA analyzed a total of 58 SCI cases during the course of its research, some analyses were completed before all 58 cases were available. For example, when NHTSA analyzed crash avoidability using data from the SCI cases only 50 cases were available. *See* Final Regulatory Impact Analysis, available in the docket number referenced at the beginning of this document.

[35] As the selection of SCI cases, media reports, and other sources of information available to NHTSA on backover crashes may tend to report more heavily on accidents involving vulnerable populations such as children or the elderly, the information contained in the SCI cases analyzed in this rulemaking may be over representative of the incidence of backovers involving these populations.

TABLE 9—AVERAGE DISTANCE TRAVELED BY BACKING VEHICLE FOR FIRST 58 SCI BACKOVER CASES AND PERCENT OF BACKOVER CRASHES THAT COULD BE AVOIDED THROUGH VARIOUS COVERAGE RANGES [36]

	Number of SCI cases	Average distance traveled prior to strike (ft.)	7ft (%)	15ft (%)	20ft (%)	35ft (%)
Car	18	13.7	39	56	78	89
SUV	22	13.4	27	68	82	100
Minivan	4	31.0	25	50	50	75
Van	1	54.5	0	0	0	0
Pickup	13	17.2	38	69	69	92
All Light Vehicles	58	26.0	33	63	77	93

Analysis of Backover Crash Risk by Monte Carlo Simulation

NHTSA also calculated backover crash risk as a function of pedestrian location using a Monte Carlo simulation.[37] Data from a recent NHTSA study of drivers' backing behavior,[38] such as average backing speed and average distance covered in a backing maneuver, were used to develop a backing speed distribution and a backing distance distribution that were used as inputs to the simulation. Similarly, published data [39] [40] [41] characterizing walking and running speeds of an average 1-year-old child were also used as inputs. A Monte Carlo simulation was performed that drew upon the noted vehicle and pedestrian motion data to calculate a probability-based risk weighting for a test area centered behind the vehicle. The probability-based risk weightings for each grid square were based on the number of pedestrian-vehicle backing crashes predicted by the simulation for trials for which the pedestrian was initially (i.e., at the time that the vehicle began to back up) in the center of one square of the grid of 1-foot squares spanning 70 feet wide by 90 feet in range behind the vehicle. A total of 1,000,000 simulation trials were run with the pedestrian initially in the center of each square.

The output of this analysis calculated relative crash risk values for each grid square representing a location behind the vehicle. The results suggested that, if pedestrians were randomly distributed in areas behind the vehicle, an area 12 feet wide by 36 feet long centered behind the vehicle would address pedestrian locations having relative crash risks of 0.15 and higher (with a risk value of 1.0 being located directly aft of the rear bumper). To address crash risks of 0.20 and higher, an area 7 feet wide and 33 feet long centered behind the vehicle would need to be covered. The analysis showed that an area covering approximately the width of the vehicle out to a range of 19 feet would encompass risk values of 0.4 and higher.

c. Advance Notice of Proposed Rulemaking

In response to the K.T. Safety Act, NHTSA initiated rulemaking to amend FMVSS No. 111 to improve a driver's ability to see areas to the rear of a motor vehicle to reduce backover incidents by publishing an ANPRM in the **Federal Register** on March 4, 2009. In addition to complying with the statutory deadline for initiating rulemaking, we published the ANPRM in order to solicit public comment on the current state of research and the efficacy of available countermeasures. In this notice, we acknowledged the backover safety problem and its disproportionate effect on small children and the elderly. We further described our ongoing research efforts and presented a series of specific questions for public comment.

The research presented in the ANPRM focused on four major topic areas. The first area involved the nature of backover incidents and backing crashes generally. We presented the details of documented backover incidents, including the locations of backover victims, the paths the victims took to enter the path of the vehicle, and the visibility characteristics of the vehicles involved. In the ANPRM, we outlined the information we had regarding these crashes, whether the lack of visibility played a significant role, and whether or not the characteristics of a class or type of vehicle could be considered a contributing factor.

The second area of focus involved the evaluation of various strategies regarding the vehicles types and the appropriate rear visibility countermeasure. We presented three possible strategies in the ANPRM and requested public comment. The first strategy raised by the ANPRM was to ensure that the vehicles which are over-represented in terms of fatalities and injuries would have their rear field of view improved. Such a strategy would have focused on vehicles such as pickup trucks or MPVs, which were presumed to be overrepresented. The second strategy explored sought to establish a minimum blind zone area for vehicles under 10,000 pounds. Our research at the time suggested that a vehicle's rear blind zone area may be statistically correlated with its rate of backing crashes. Using this correlation, we conjectured that it may have been possible to determine which vehicles warranted certain rear visibility improvements based on the size of their rear blind zones and the setting of a ''threshold.'' Finally we also explored the possibility that the rear visibility countermeasures should be applied uniformly to all vehicles contemplated by the K.T. Safety Act.

The third topic focused on the evaluation of various countermeasures. After consulting past agency research, industry and other outside sources, as well as conducting new research, four types of countermeasures were presented and described in the ANPRM. These countermeasures included direct vision (i.e., what can be seen by a driver glancing directly out a vehicle's windows), rear-mounted convex mirrors, rear object detection sensors

[36] These distances do not indicate the distance between the victim and the vehicle at the start of the backing maneuver because it shows the distance that the vehicle traveled before striking the pedestrian. The SCI cases do not have sufficient detail to enable the agency to determine the location of the pedestrian at the beginning of the backing maneuver.

[37] 74 FR 9484.

[38] Mazzae, E.N., Barickman, F.S., Baldwin, G.H.S., and Ranney, T.A. (2008). On-Road Study of Drivers' Use of Rearview Video Systems (ORSDURVS). National Highway Traffic Safety Administration, DOT HS 811 024.

[39] Manual on Uniform Traffic Control Devices for Streets and Highways, 2003 Edition. Washington, DC: FHWA, November 2003.

[40] Milazzo, J.S., Rouphail, J.E., and Alien, D.P. (1999). Quality of Service for Interrupted-Flow Pedestrian Facilities in Highway Capacity Manual 2000. Transportation Research Record, No. 1678 (1999): 25–31.

[41] Chou, P., Chou, Y., Su, F., Huang, W., Lin, T. (2003). Normal Gait of Children. Biomedical Engineering—Applications, Basis & Communications, Vol. 15 No. 4 August 2003.

(such as ultrasonic or radar-based devices), and rearview video (RV) systems. While we noted that research was still ongoing, the ANPRM described how these systems work, how well they perform in identifying pedestrians, and how effectively drivers may use them.

Finally, the fourth topic involved consideration of technical specifications and test procedures that could be used to describe and evaluate the performance aspects of direct view, rear-mounted convex mirrors, rear object detection sensors, and rearview video (RV) systems. The agency presented preliminary information on potential technical specifications and test procedures and solicited information on how these specifications and procedures should be refined for the purposes of developing repeatable compliance tests.

In addition to presenting these four areas of research, NHTSA also requested comment on more than forty specific questions in the ANPRM. We requested public input on a variety of topics including studies on the effectiveness of various indirect rear visibility systems (i.e., devices that aid a driver in seeing areas around a vehicle, such as mirrors or video systems) that have been implemented in the U.S. and/or abroad, and technological possibilities that could enhance the reliability of existing technologies. Further, the agency sought information on the costs of implementation of all available technologies to develop more robust cost and benefit estimates.

In response to the ANPRM, the agency received comments from 37 entities, including industry associations, automotive and equipment manufacturers, safety advocacy organizations, and 14 individuals. Generally, the comments covered the main research areas detailed in the ANPRM. With regard to the issue of which vehicles most warrant improved rear visibility, vehicle manufacturers generally desired to focus any expansion of rear visibility on the particular types of vehicles (i.e., trucks, vans, and MPVs within the specified weight limits) that they believed posed the highest risk of backover crash fatalities and injuries. However, vehicle safety organizations and equipment manufacturers generally suggested that all vehicles need to have expanded rear fields of view.

With regard to the issue of what technology would be effective at expanding the rear field of view for a driver, commenters discussed additional mirrors, sensors, and rearview video combined with sensors. Some commenters provided input regarding test procedure development and rear visibility countermeasure characteristics, such as visual display size and brightness, and graphic overlays superimposed on a video image. Some also discussed whether it is appropriate to allow a small gap in coverage immediately behind the rear bumper. Finally, commenters generally agreed with the cost estimates provided by the agency. However, the Consumers Union and Magna comments did suggest that our estimates of the cost of individual technologies seemed high and that there would be larger cost reductions over time than the agency had indicated.

Because the ANPRM had an extremely broad scope, the comments addressed a wide variety of issues and provided a large amount of information. A more extensive discussion of the ANPRM, the comments that the agency received in response, and our analysis and response to these comments is available in the NPRM. However, specific comments on the ANPRM which are relevant to our discussion of today's final rule are also referenced by issue in section III, *Final Rule and Response to Comments.*

d. Notice of Proposed Rulemaking

After evaluating the comments on the ANPRM and conducting additional research, we published an NPRM on December 7, 2010.[42] In that notice, we proposed to apply the rear visibility requirements to all passenger cars, MPVs, trucks, buses, and low-speed vehicles with a GVWR of 10,000 pounds or less by specifying an area behind the vehicle that a driver must be able to see when the vehicle is in reverse gear. The proposal tentatively concluded that drivers need to be able to see a visual image of a 32-inch tall cylinder with a 12-inch diameter behind the vehicle over an area 5 feet to either side of the vehicle centerline by 20 feet in longitudinal range from the vehicle's rear bumper surface. We further proposed various performance criteria for the visual display including luminance, rearview image response time, and image linger and driver deactivation restrictions, as well as durability requirements. Pursuant to the K.T. Safety Act, the NPRM also proposed a phase-in schedule for compliance.

The NPRM proposed to apply rear visibility improvements to all passenger cars, MPVs, trucks, buses, and low-speed vehicles with a GVWR of 10,000 pounds or less because the available data showed no clear basis for excluding certain vehicles. As noted above, the ANPRM and the commenters on the ANPRM explored various possibilities for establishing rear visibility countermeasures which would be applied based on vehicle type (such as MPVs, trucks, and buses) or based on a blind zone threshold. However, as the available data indicated that substantial numbers of fatalities and injuries are caused by all types of light vehicles, we did not propose in the NPRM to limit the application of rear visibility countermeasures by vehicle type. Further, our data showed that applying the rear visibility countermeasure by a blind zone area threshold lacked a sufficient statistical basis. The available data demonstrated that vehicles with comparatively small blind zones still had similar backover crash rates as other vehicles. In addition, the agency concluded that applying rear visibility countermeasures to all vehicles with a GVWR of 10,000 pounds or less would most closely follow the intent of Congress in the K.T. Safety Act. Thus, the NPRM proposed to apply the rear visibility improvements to all vehicles contemplated by Congress under the K.T. Safety Act.

We also expressed in the NPRM our view that rearview video systems represent the most effective technology available to address the problem of backover crashes. Our data showed that rear-mounted convex mirrors and sensor-based object detection systems offered few benefits compared to rearview video systems due to system performance and driver use issues. Studies conducted by NHTSA showed that sensors and mirrors, while able to detect pedestrians to some degree, simply did not induce the driver response needed to prevent backover crashes. The NPRM noted that a sensor-activated warning of the presence of an obstacle often does not lead to a successful (i.e., timely and sufficient) crash avoidance response from the driver unless the driver is also provided with visual confirmation of obstacle presence. Thus, the NPRM proposed to afford the driver a visual display which offered a view of the area immediately behind the vehicle.

In the NPRM, we tentatively concluded that the area covered by the proposed rearview countermeasure should be 20 feet by 10 feet. In making this determination, we used various sources of information including the comments received from the ANPRM, the available safety data, our review of special investigations of backover crashes, and a computer simulation. For example, we examined the typical distances that backover-crash-involved vehicles traveled from the location at

[42] 75 FR 76186.

which they began moving rearward to the location at which they struck a pedestrian. We tentatively concluded that an area with a width of 10 feet (5 feet to either side of a rearward extension of the vehicle's centerline) and a length of 20 feet extending backward from a transverse vertical plane tangent to the rearmost point on the rear bumper encompasses the highest risk area for children and other pedestrians to be struck. Thus, we proposed in the NPRM that test objects, of a particular size, within that area must be visible to drivers when they are conducting backing maneuvers.

In the NPRM we also expressed our view that, in order to maintain the level of effectiveness that we have seen in our testing of existing rearview video systems, we needed to propose a minimum set of performance requirements. Specifically, the NPRM set forth requirements for the performance of the visual display luminance, a minimum rearview image size, a rearview image response time requirement, durability requirements for exterior components, and provisions against driver deactivation and excessive rearview image linger. In drafting these proposed requirements, the agency strove to afford manufacturers flexibility to meet these requirements as they see fit (such as through the development of new technologies). Since we stated in the NPRM that most, if not all, rearview video systems that would likely be used by manufacturers to meet the proposed minimum set of requirements already met these requirements, we did not believe that the adoption of these additional requirements would increase the cost of this existing technology.

Further, pursuant to section 2(c) of the K.T. Safety Act, we proposed a phase-in schedule that would be completed within 48 months of the publication of the final rule. Because we anticipated publishing a final rule by the statutory deadline of February 28, 2011, we noted that the rule must require full compliance not later than February 28, 2015. However, we were conscious of the fact that, for safety standard compliance purposes, model years begin on September 1 and end on August 31 and that February 28 falls in the middle of a model year. Thus, the agency tentatively concluded that vehicle manufacturers would need, as a practical matter, to begin full compliance at the beginning of that model year, i.e., on September 1, 2014. Accordingly, NHTSA proposed the following phase-in schedule:

- 0% of the vehicles manufactured before September 1, 2012;
- 10% of the vehicles manufactured on or after September 1, 2012, and before September 1, 2013;
- 40% of the vehicles manufactured on or after September 1, 2013, and before September 1, 2014; and
- 100% of the vehicles manufactured on or after September 1, 2014.

Finally, the NPRM also proposed a compliance test with which to evaluate the field of view and image size requirements. The proposed test would utilize a photography camera with an imaging sensor located at the eye point of a 50th percentile male. The test procedure would then take a photograph of the test objects designed to simulate the height and width of an 18-month-old toddler as they are presented in the rear visibility system display. This photograph would then be used to assess the compliance of the rear visibility system by determining if the required portions of the seven test objects, located along the perimeter of the required field of view, are visible and displayed at a sufficient size.

e. Summary of Comments on the NPRM

In response to the NPRM, the agency received comments from a wide variety of commenters including trade associations, manufacturers, advocacy groups, parts suppliers, and individuals. The advocacy groups submitting comments included KidsAndCars.org, the Insurance Institute for Highway Safety (IIHS), the Automotive Occupant Restraints Council, the American Academy of Pediatrics, the Consumers Union, and the Advocates for Highway Safety (the Advocates). In addition to the trade associations representing manufacturers including the Alliance of Automobile Manufacturers (the Alliance), the National Truck Equipment Association (NTEA), the Motor & Equipment Manufacturers Association (MEMA), the School Bus Manufacturers Technical Council, and Global Automakers, we also received comments from individual vehicle manufacturers such as Toyota Motor North America (Toyota), Volkswagen Group of America (Volkswagen), Porsche Cars North America (Porsche), Ford Motor Company (Ford), American Honda Motor Co. (Honda), Mercedes-Benz USA (Mercedes), General Motors Company (General Motors), and BMW Group (BMW). Additionally, the equipment manufacturers commenting on the NPRM included Brigade Electronics (Brigade), Gentex Corporation (Gentex), Magna Mirrors and Magna Electronics (Magna), Sony Electronics (Sony), Panasonic Corporation of North America (Panasonic), Sense Technologies, Rosco Vision Systems (Rosco), Rearscope North America (Rearscope), Continental, Valeo, IFM Electronic (IFM), and Delphi. Finally, the agency also received approximately 150 comments from individual commenters. In general, the commenters expressed support for the goals of this rulemaking pursuant to the K.T. Safety Act. However, many offered various recommendations on the most appropriate manner through which to achieve those goals.

The primary issue raised by the advocacy groups concerned our proposed test procedure for evaluating compliance with the field of view requirement. The advocacy groups were concerned that, as the proposed test procedure did not require that the field of view begin at the bumper, nor did it require that a large portion of the first row of test objects (placed 1 foot behind the bumper) be visible, significant blind spots can exist in a theoretically compliant rear visibility system. Citing the SCI cases and the Monte Carlo simulation used by the agency to determine the proposed coverage area of the field of view requirement, the advocacy groups requested that the final rule address these potential blind zones. Another issue raised by the advocacy groups involved their recommendation that image response time be reduced to 1.0 second or less. The advocacy groups asserted that there is a significant safety risk that drivers may begin backing their vehicles without the benefit of the rear visibility system if they are not promptly presented with the required field of view.

On the other hand, while vehicle manufacturers generally support the rule, the most significant concern raised by the manufacturer comments focused on the cost and feasibility of specific performance requirements within the proposed phase-in schedule. First, the manufacturers asserted that the agency was wrong to assume, as it did in the NPRM, that most rearview video systems that are currently in use by the manufacturers would meet all of the proposed requirements in the NPRM. For example, many manufacturers commented that their current rearview video systems would not be able to meet the response time requirement under certain situations. The NPRM proposed a response time requirement which prescribed that the compliant rearview image must be displayed within 2.0 seconds of selecting the reverse gear. The manufacturers commented that many of their rear visibility systems require initialization time and would not be able to meet the response time if the reverse gear was selected soon after the vehicle is activated. Thus, many

manufacturer comments requested various vehicle preconditions that would accommodate their rear visibility system initialization process. Similarly, the manufacturers were concerned their existing systems would not fully meet all of the image size, display luminance, deactivation, and linger time requirements.

As a result, the manufacturers were concerned that the proposed phase-in schedule would require that the manufacturers conduct redesigns to their existing rear visibility systems outside of the normal product development cycle. They contended in their comments that such a scenario would significantly increase the costs and burdens of compliance. Thus, the manufacturers requested that the agency delay some of the aforementioned requirements until the end of the statutory phase-in deadline in order afford manufacturers time to redesign their rear visibility systems in conjunction with the normal vehicle redesign schedule.

The equipment manufacturer comments, to varying degrees, contended that their products were able to meet the proposed requirements in the NPRM. Generally, commenters such as Sony, Magna, and Gentex expressed confidence that their products can be used to bring a vehicle into compliance with the proposed requirements. However, other suppliers, such as Sense Technologies, IFM Electronic, and Valeo, stated that the NPRM should not have concluded that technologies such as mirrors and sensors were not suitable countermeasures. In addition, suppliers offered comments as to the potential new rear visibility systems technologies that were being developed (such as automatic brake intervention, combination sensor/video systems, infrared or Doppler radar systems, etc.). Thus, many supplier comments requested that the agency avoid setting requirements that restrict the development of new technologies and rearview functions.

Finally, individual commenters expressed either general support or general opposition to the goals of this rule. The individual commenters expressing support for this rule generally cite the vulnerability of the population that is most likely to be victimized by this safety risk. A significant portion of these commenters either suffered a significant personal loss due to a backing crash or had an acquaintance who suffered a significant personal loss due to a backing crash. On the other hand, commenters opposed to this rule cited its high costs and questioned its potential effectiveness. Of these commenters, many opined that the more prudent manner in which to address the safety risks related with backover incidents is through driver training and education.

f. Public Hearing and Workshop

After publishing the NPRM, the agency decided to further solicit comments from the public by holding a public hearing and a technical workshop. On March 2, 2011, the agency published a notice in the **Federal Register** announcing these events.[43] The technical workshop was held on March 11, 2011 at NHTSA's Vehicle Research and Test Center in East Liberty, Ohio. The goal of this workshop was to provide a forum in which interested commenters could demonstrate their specific concerns with the agency's proposed test procedure. The public hearing was held on March 23, 2011, at the NHTSA headquarters in the U.S. Department of Transportation in Washington DC. This hearing provided an opportunity for the agency to hear from advocacy groups, organizations that provide rearview countermeasures, and the families of backover crash victims.

The participants in the technical workshop included representatives from Volkswagen, Sense Technologies, the Alliance, Global Automakers, Honda, Ford, Mitsubishi, and KidsAndCars.org. The participants generally presented areas they believed could be clarified regarding the proposed test procedure. The majority of the areas discussed were also presented in the various comments submitted in response to the NPRM such as durability testing, deactivation issues, and luminance testing. However, certain unique comments (such as concerns regarding vehicle loading procedure, rearview mirror positioning, etc.) were discussed during the technical workshop. These issues will be identified and responded to in conjunction with the written comments in the sections that follow.

The participants in the public hearing included KidsAndCars.org, the National Consumers League, the Consumers Union, Sense Technologies, Annabelle's Angels, the Advocates, the Consumer Federation of America, and family members of victims of backover crashes including the Auriemma, Ivison, Dahlen, Gridley, Gulbransen, Nelson, and Anthony families. The participants in the public hearing expressed general support for the proposed rule. In addition to reiterating some of the technical comments that the advocacy groups submitted on the NPRM, participants in the public hearing generally underscored the high non-economic and human cost that is associated with backover incidents. KidsAndCars.org noted that in 70 percent of the cases that they have compiled, the child victim was a direct relative of the driver. Mr. Patrick Ivison, a 16 year old who was a victim of a backover crash as a toddler, also testified to the many challenges that he faces by living with the lifelong injuries that he suffered. Participants also noted other unquantifiable costs such as parents who commit suicide when they are unable to forgive themselves for their involvement in a backover crash.

The families of victims cited the inability of drivers to see behind vehicles as an important danger. Many of their cases involved drivers who had walked around the rear of the vehicle or had been present at the rear of the vehicle shortly before entering the vehicle and beginning the reverse maneuver. The Consumers Union also noted observational evidence that children often walk along the rear bumpers of vehicles as they travel to the other side of the vehicle. In general, the participants in the public hearing refuted the idea that victims of backover incidents are limited to irresponsible parents or caretakers.

g. Additional 2012 Research

As described above, the agency conducted additional research and analysis covering a wider range of driver and an additional vehicle type. Specifically, the additional testing parameters examined whether variations in driver and vehicle type would have any impacts on NHTSA's estimates regarding drivers' use of backing aid technologies to avoid backover crashes.

Research Design—Wider Range of Vehicle Types and Drivers

In order to examine whether variations in driver and vehicle type would have any unanticipated impacts on NHTSA's estimates, the agency conducted additional testing utilizing a sedan. Further, the agency sought to more closely balance the ratio of male and female participants in this latest study and include a broader age range among the study participants.

In terms of vehicle type, NHTSA's previous studies had focused on minivans and crossover utility vehicles to examine drivers' use of backing aid technologies. While we acknowledge that vehicles have different blind zones (and that this would intuitively have an impact on the backover crash risk), the agency believes that our previous

[43] 76 FR 11417.

research evaluating human behavior using a single vehicle can be applied across the vehicle fleet. We believe this is appropriate because the data show that virtually all vehicles have a blind zone that covers at least the area directly behind the vehicle where our Monte Carlo simulation suggested that backover crash risk is the highest. Thus, the agency's previous studies, for example utilizing the Honda Odyssey to examine effectiveness in avoiding backover crashes, should approximate the vast majority of vehicles on the road.

However, the agency decided to conduct an additional study using a midsized sedan (the Nissan Altima). We note that the choices of vehicle type for testing were constrained to vehicles that had significant numbers of drivers both with and without cameras. Thus, we were unable to test vehicles at the extremes for large or small blind zone sizes. However, we reasoned that while drivers of a smaller vehicle may not have an actual improved view of the what the Monte Carlo simulation indicates would be relevant area behind the vehicle, as compared to a minivan or SUV, it may be possible that their behavior can be different due to drivers' own *perception* of the size of the vehicle blind zone. Thus, additional testing was designed to ensure that this factor would not have any unanticipated effects on NHTSA's estimates on the ability of drivers to use backing aid technologies to avoid backover crashes.

In terms of driver demographics, the agency more closely balanced the ratio of male and female participants in the 2012 study. Further, the agency sought to include a broader age range among the study participants (earlier studies had participants between the ages of 25 and 55). The agency believes that the participants in NHTSA's earlier studies can approximate the performance of drivers involved in backover crashes because (when faced with a potential backover crash situation) all drivers are unable to see the relevant areas behind the vehicle with the greatest crash risk. Further, we assumed that different characteristics between various driver demographics (such as age or gender) would not affect drivers' use of backing aid systems. However, the agency decided to examine further this assumption as well. While all drivers would have the same opportunity to view a pedestrian using a rearview video system, NHTSA decided to include participants with a broader set of driver demographic characteristics to see whether or not the inclusion of these drivers would lead to a statistically different result due to potential unforeseen factors (e.g., comfort level with the system). Thus, NHTSA's 2012 research included drivers of broader age and gender characteristics.

Research Design—New Test Object Presentation (Laterally Moving Test Object)

In addition to examining a different type of vehicle and a wider range of drivers, the agency also had the opportunity to examine how drivers would react to a different obstacle presentation method. Through this test, the agency sought to determine if a different test object presentation could have any unanticipated effects on the agency's estimates of the driver's ability to use backing aid technologies to avoid backover crashes. Thus, separately, the new research also included a different backover test where the test object laterally moved into the vehicle's backing path from the passenger side of the vehicle (in addition to utilizing the original test object presentation method where the test object would pop-up behind the vehicle).

As the intent of these studies was to isolate the ability of the driver to use the backing aid technology to avoid a backover crash with a test object that is otherwise unseen and unanticipated, the agency designed its previous tests to utilize a pop-up test object presentation.[44] Because the agency is aware that many cases involve drivers who walked around their vehicles before getting into the vehicle and starting a backing maneuver, we designed this pop-up test method to represent the surprise presence of the pedestrian—including the pedestrian's movement into the vehicle's backing path. The pop-up presentation method is a reasonable representation of a person that is either not visible to the driver using the standard vehicle equipment (for the duration of the backing maneuver), or visible to the driver using the same equipment (but was not observed by the driver). We believe that the pop-up presentation method is a reasonable estimate of these two conditions because the test object is presented to the test participant after he/she has begun the backing maneuver. In other words, the presentation of the test object is limited to the time after the test participant has checked his/her surroundings and decided that they could conduct a backing maneuver. As there is no evidence to suggest that any significant portion of the victims of backover crashes were a result of a driver intentionally backing over a pedestrian, the aforementioned two situations likely represent the vast majority of situations in which persons are injured or killed in backover crashes. We assume that a driver who has observed a person moving behind the vehicle using rearview mirrors would attempt to stop immediately.

However, the agency is aware that backover crashes involve a wide variety of factors (e.g., the movement of the pedestrian, the time at which the vehicle's backing maneuver begins, the trajectory/speed of the vehicle, etc.). Thus, the agency's new research included a different obstacle presentation method to help determine whether the new obstacle presentation could have any unanticipated effects on the driver's ability to use the rearview video system. By maintaining consistency with the pop-up test object presentation method (e.g., in vehicle model, obstacle presentation time in the rearview video system, etc.), the agency designed a similarly reasonable test to approximate the surprise presence of a pedestrian (that measures the same crash situations as the pop-up presentation method).[45] In doing so, the agency sought to determine whether driver use of the rearview video system would be statistically different if the test object was presented in a fashion where it approached the vehicle laterally from the passenger side. Thus, the agency's 2012 research included the new presentation method where the test object enters the vehicle's backing path from the passenger side in addition to the original pop-up test object presentation method.

Summary of Research Test Conditions

For those aforementioned reasons, the agency tested three different conditions as outlined in Table 10, below. In all test conditions for the 2012 research, the agency used the Nissan Altima (a midsized sedan) as the test vehicle. Further, the agency closely balanced the ratio of male and female participants and included drivers above age 18.

[44] The test presented the pop-up test object only after the driver had backed the vehicle a specified distance. In other words, the driver began his backing maneuver before the test object appeared.

[45] Further information on the test parameters are available in the research report (Rearview Video System Use by Drivers of a Sedan in an Unexpected Obstacle Event). This report is available in Docket No. NHTSA–2010–0162–0253.

Table 10. Conditions Tested in 2012 Study on Drivers' Use of Backing Aid Technologies.

		OBSTACLE PRESENTATION	
		Pop-up object, centered, 14 ft. aft	Moving object
SYSTEM	Baseline (No System)	***No Test*** (Assume 100% crashes)[46]	***Test***
	Rearview Video	***Test***	***Test***

Research Results

The test conditions described above can be used to answer two questions. The first is whether or not (using the same pop-up test object presentation method) the new drivers and vehicle type (more balanced gender distribution, the different vehicle type, and the broader age range) would contribute to a result that was statistically different. The second is whether or not (using similar driver demographic characteristics and the same vehicle) the different test object presentation method (moving test object versus pop-up test object) would produce a statistically different result.

After completing 143 tests using the three aforementioned test conditions, the agency obtained the following results:

Table 11. Test Results from 2012 Study on Drivers' Use of Backing Aid Technologies.

		Nissan Altima Tests OBSTACLE PRESENTATION			
		Pop-up object, centered, 14 ft aft		**Moving object**	
		# Tested	% Crashes	# Tested	% Crashes
SYSTEM	Baseline (No System)	N/A	(Assumed 100%)	56	91%
	Rearview Video	36	67%	51	69%
	TOTAL	36		107	

Among all of NHTSA's test conditions in the 2012 research (including both test object presentation methods), the rearview video system increased drivers' ability to avoid crashes with the test objects. In each of the cases, the difference between the baseline (no rear visibility system) condition and the rearview video system condition was statistically significant. In other words, all of the test data continue to show that rearview video systems have a statistically significant effect of improving the driver's ability to avoid a backover crash.

However, in spite of the aforementioned new test parameters (vehicle/driver types and obstacle presentation method) that were introduced into NHTSA's 2012 research, the results do not show that the new test parameters created statistically different results from NHTSA's previous studies.[47] When comparing the results of the Nissan Altima pop-up obstacle tests (with the additional driver demographic characteristics) to NHTSA's previous studies using the Honda Odyssey and the same test object presentation method, the results do not show that the inclusion of the different vehicle type and additional driver demographic characteristics led to a statistically different result.[48] Finally,

[46] The baseline (no system) test condition with a pop-up test object was not tested in NHTSA's 2012 research. As in NHTSA's previous studies, the pop-up test object is presented in the vehicle's blind zone and the driver does not have an opportunity to view the test object through the vehicle mirrors or direct vision. In NHTSA's previous studies, no driver was able to avoid a collision with the pop-up test object without the use of a rear visibility system. As the Nissan Altima blind zone also prevents the driver from seeing the area where the pop-up test object would deploy, drivers would likewise be unable to avoid a collision with the pop-up test object in the baseline test condition.

[47] While the agency's research included as many participants as time and resources permitted, the agency's new research parameters yielded lower, but not statistically different effectiveness estimates compared to its previous research. We acknowledge that testing additional participants may have enabled the agency to detect a statistical difference between these factors. However, the agency is not currently aware of any research that can indicate what this difference would be.

[48] *See* Docket No. NHTSA–2010–0162–0253, Rearview Video System Use by Drivers of a Sedan in an Unexpected Obstacle Scenario. While this comparison shows that the data does not indicate a statistically different result due to the combination of the new driver demographics and vehicle type, the data also does not indicate whether or not the individual driver or vehicle type factors could have yielded a statistically different result. We note that in a separate analysis of the data from NHTSA's previous studies using the

Continued

when comparing the results of the moving test object presentation method and the pop-up test object presentation method (utilizing the same vehicle and driver demographic characteristics), the results also did not show a statistical difference.[49]

h. Additional SCI Case Analysis

As described above, the agency began a new effort to identify and analyze SCI cases that involved vehicles with rearview video systems. The agency's intention was to examine any such cases available in order to better understand how the performance requirements proposed in the NPRM address the real world backover safety risk.[50]

Given the volume of comments received and the issues raised on those comments, the agency believed that SCI case analysis may indicate whether some of those concerns raised in the comments warrant further analysis. For example, in the NPRM, the agency proposed to test the 20-foot by 10-foot zone behind the vehicle using various test objects and the agency subsequently received various comments on whether testing using those test objects would ensure that the rearview video system would cover the areas behind the vehicle associated with the greatest backover crash risk. The agency reasoned, that an SCI case where a rearview video system was installed on the vehicle could offer additional insight into whether a crash happened under circumstances where a rearview video system covering the required portions of the test objects did not show the pedestrian behind the vehicle. After reviewing all the available cases prior to today's final rule, the agency identified two cases involving vehicles with rearview video systems.

- *Case No. DS11008:* In the first case, an elderly man driving a 2006 Prius (equipped with an OEM[51] rearview video system) struck an elderly woman in his driveway.[52] The technical report states that the elderly man was reversing the Prius along the driveway at a private residence when he struck an elderly woman standing in the driveway directly behind the vehicle. The driver stated that he did not remember whether he used any of the vehicle's mirrors or the vehicle's rearview video system but recalls looking straight ahead prior to the impact with the non-motorist. The driver stopped the vehicle after hearing yelling. The non-motorist sustained a contusion to the left knee and possible left rib fractures. She was transported to a local hospital several hours after the incident.
- *Case No. CR13011:* In the second case, a 30-year-old male driver of a 2010 BMW X5 (equipped with an OEM rearview video system) struck a non-motorist while reversing his vehicle in a parking lot.[53] The narrative in the report states that the non-motorist had stopped directly behind the vehicle because the non-motorist was distracted by flying birds. The driver selected the reverse gear (automatically activating the vehicle's rearview video system) and released his foot from the brake. The driver reapplied the brake as soon as he identified the non-motorist in the rearview image. However, the vehicle did not come to a complete stop before striking the non-motorist. The driver stated that when the vehicle is first started, the display (that is used to show the rearview image) has a boot sequence. The driver stated that he allowed the vehicle to begin reversing prior to the rearview image appearing in the vehicle display. The non-motorist sustained no significant injury and stood up unassisted after the incident. The non-motorist declined further medical treatment after being evaluated by paramedics.

While neither of these two cases provides conclusive data, the second (Case No. CR13011) seems to suggest that an important characteristic for rearview video systems intending to address the backover safety problem is the ability of the system to quickly show the rearview image. As shown by the facts leading up to the accident in Case No. CR13011, a rearview video system that is still initializing after the vehicle has begun reversing may not afford the driver enough time to identify a pedestrian behind the vehicle and avoid a backover crash.

Although the information in these two cases are useful, the agency does not believe that conducting further analysis between now and January 2, 2015 will substantially add to our understanding.[54] After examining all of the cases that the agency has investigated up to this point (only two of which involve vehicles with rearview video systems), it seems unlikely that many additional cases involving rearview video systems will be available for analysis by January 2, 2015. Given this expectation and the safety impact of further delay of today's final rule, the Department decided to complete the analysis of the available cases and report the results of the analysis at this time so that the Department could move forward with issuing today's final rule.

i. Updates to NCAP

As stated in the Department's letter to Congress establishing the January 2, 2015 deadline for issuing today's final rule, NHTSA would consider updating its New Car Assessment Program (NCAP) to include information about rearview video systems and recommend to consumers vehicle models with this important safety feature. While this

Honda Odyssey (where obstacle presentation, participant age, and vehicle type are all consistent) the male and female drivers did not crash with the test objects at statistically different rates.

[49] An analysis of the statistical significance of the difference between the pop-up and moving test object presentation methods is available in the research report titled ''Rearview Video System Use by Drivers of a Sedan in an Unexpected Obstacle Scenario.'' *See* Docket No. NHTSA–2010–0162–0253.

[50] The agency's SCI program conducts detailed investigations for specific crashes that fall under a variety of crash types that NHTSA has decided to research (e.g., backover crashes). As a part of this program, NASS reports to NHTSA any cases that fall under the crash types that NHTSA has identified when sampling police jurisdictions. In addition, SCI teams search the internet and other sources to help identify these cases. For this particular research effort, NHTSA specifically instructed the SCI program to identify cases from their respective sources of information that are backover crashes involving vehicles with rearview video systems. We also instructed the SCI program to conduct a search of any existing reported cases to identify whether any were backover crashes involving vehicles with rearview video systems.

[51] OEM refers to equipment that was originally installed on the vehicle as produced by the manufacturer.

[52] Case No. DS11008. The technical report is available at the SCI XML Case Viewer Web site (*http://www-nass.nhtsa.dot.gov/nass/sci/SearchForm.aspx*).

[53] Case No. CR13011. The technical report is available at the SCI Electronic Case Viewer Web site (*http://www-nass.nhtsa.dot.gov/BIN/logon.exe/airmislogon*).

[54] In addition to analyzing SCI cases with rearview video systems, the agency also considered analyzing rearview video systems currently installed in the vehicle fleet to see whether there was sufficient data to measure the real world impact of rearview video systems. The agency reasoned that it might be possible to measure this impact because: (1) The adoption of rearview video systems in new vehicle sales has been increasing substantially in recent years, and (2) the available testing data (coupled with the agency's difficulty in identifying SCI cases with rearview video systems) suggest that these systems would have a beneficial effect in reducing backover crashes. However, after analyzing the cumulative installation of rearview video systems in the vehicle fleet (i.e., identifying the number of vehicles currently on the roads that have these systems), the agency determined that too little data exist at this point in time to enable the agency to measure the current impact of rearview video systems on reducing backover injuries and fatalities. Our data on cumulative sales show that, in MY 2011, nearly 20% of passenger cars and light trucks were sold with a rearview video system. However, the total fleet (all vehicles currently operating on U.S. roads) with rearview video systems in 2011 was only 2.8%. Given the target population of this rule (210 fatalities and 15,000 injuries), we concluded that too little data exist at this time to make any conclusions about the impact of rearview video systems in reducing injuries and fatalities at this time. Further details about this analysis is available in the Final Regulatory Impact Analysis accompanying this rule in the docket referenced at the beginning of this document.

update to NCAP would be a separate agency consideration from today's final rule, we reasoned that it would be appropriate to consider updates to NCAP on this subject given the large amount of available information on backover crashes and their countermeasures that can be useful for consumers. Since then, NHTSA issued a request for comments to consider a plan for updating NCAP [55] and has issued a final decision notice to implement this change to the program [56] after considering the public comments.

In our final decision notice, the agency adopted a plan to update NCAP based on the request for comments and the public comments received. In essence, the agency decided to include rearview video systems as a ''Recommended Advanced Technology Feature'' [57] on the NCAP Web site (*www.safercar.gov*). As long as a vehicle model has a rearview video system meeting three performance criteria, *www.safercar.gov* will recognize the vehicle model a having a ''Recommended Advanced Technology Feature.'' The three performance criteria are based on the proposed field of view, image size, and response time requirements in the NPRM for this rulemaking. After considering the available information on the backover safety problem and the public comments, we determined that systems meeting these three criteria would be appropriate for ensuring that rearview video systems recommended by NCAP are systems that are suitable for assisting drivers in avoiding backover crashes.

While the agency took this action to update NCAP, we acknowledged (in both the request for comments and the final decision notice) that updating NCAP to incorporate recommendations for vehicle models with rearview video systems is not a substitute for the action taken by the agency in today's final rule. However, we believe that this update to NCAP (to include rearview video systems) is appropriate and complementary to the agency's actions in today's final rule for a few reasons. First, we believe that all the available research on rearview video systems shows that these systems are able to help drivers avoid backover crashes. Second, there is no reason for the agency to delay informing consumers about the backover safety risk and encouraging manufacturers to install these systems on their vehicle models to help consumers avoid these crashes. Third, we believe that consumers should have an easy way to identify vehicle models with rearview video systems and compare vehicle models based on their installation of ''Recommended Advanced Technology Features.'' Fourth, NCAP criteria also help to encourage manufacturers to develop rearview video systems in a way that addresses the backover safety problem (as opposed to developing these systems as merely parking convenience features). Fifth, even after the promulgation of today's final rule, we believe that the latest update to NCAP will continue to encourage manufacturers to install rearview video systems on their vehicles ahead of the full compliance date (i.e., during the phase-in period).

III. Final Rule and Response to Comments

a. Summary of the Final Rule

With a few notable exceptions, today's final rule adopts the performance requirements from the proposed rule in the NPRM. While also responding to concerns raised by commenters, today's rule adopts the following four requirements largely without change. First, this rule adopts the NPRM proposal that required manufacturers to install rear visibility systems that enable a driver to view an area encompassing 5 feet laterally (to each side) from the longitudinal centerline of the vehicle and extending 20 feet rearward of the vehicle's rear bumper. Second, it also defines the required field of view through the placement of seven test objects along the perimeter of the field of view. Third, the required portions of these test objects that must be seen remain unchanged from the NPRM. Fourth, today's final rule also adopts the image size requirements proposed in the NPRM and thus requires that the three furthest test objects be displayed at an average subtended angle of no less than 5 minutes of arc.

However, today's final rule has not adopted the same linger time and deactivation requirements as the NPRM. In response to the manufacturers' concerns that the linger time and deactivation restrictions in the proposed rule may preclude certain design features, today's final rule defines a backing event, which begins at the selection of reverse and ends when the vehicle's forward motion achieves either 10 mph, 10 meters, or 10 seconds in duration. Today's final rule linger time restriction allows rear visibility systems to remain activated until the end of the backing event. Further, today's rule does not preclude driver deactivation of the rearview image so long as the system defaults to the compliant field of view at the beginning of the backing event. By amending the linger time and deactivation restrictions in accordance with the backing event, today's final rule addresses both the agency's safety concerns and affords the manufacturers greater design flexibility.

While the response time requirement remains unchanged from the NPRM, today's final rule adopts a test procedure to establish the vehicle condition prior to testing. In their comments, manufacturers were concerned that the vehicle software initialization process could prevent a rear visibility system from achieving compliance when tested immediately after a vehicle is started. They contended in their comments that such a test condition would not be reflective of real world use of a rear visibility system. To alleviate these concerns and to more accurately simulate real world conditions, today's final rule establishes a test condition in which the vehicle would be placed into reverse not less than 4 seconds and no more than 6 seconds after the opening of the driver's door.

Today's final rule also adopts the durability performance requirements from the NPRM except today's rule applies those requirements on a component level instead of a vehicle level. While the commenters generally supported the agency's proposal of minimum performance requirements for humidity, corrosion, and temperature exposure, the commenters contended that these tests should be conducted on a component level as opposed to a vehicle level because the durability tests would present significant practical challenges if conducted on a vehicle level. As the agency believes that a component level test would be as effective in addressing our safety concerns as a vehicle level test, today's rule adopts the durability requirements from the NPRM on a component level.

Further, today's final rule makes a few important changes to the phase-in requirements. First, unlike the NPRM, today's rule requires that manufacturers comply with only the field of view

[55] 78 FR 38266.

[56] 78 FR 59866.

[57] On *www.safercar.gov,* NCAP gives recommendations to consumers about various advanced technologies that the data show are able to address major crash problems. The Web site offers comparative information on the vehicle models offered for sale in the United States and shows which of those models have ''Recommended Advanced Technology Features.'' However, beyond simply communicating to consumers that these vehicles have these technologies, identifying a system as a ''Recommended Advanced Technology Feature'' also communicates to consumers that the system meets certain minimum performance criteria (criteria that ensure that the system was designed as a safety system as opposed to, for example, a convenience feature).

requirement during the phase-in period, and requires that manufacturers comply with all provisions of today's final rule at the end of the 48-month phase-in period. In the NPRM, the agency conducted its cost/benefit analysis assuming that most currently available rear visibility systems were compliant or could be easily made compliant with all of the proposed requirements. Through the comment period, the agency learned that most current rear visibility systems do not meet all of the requirements set forth in today's final rule and could not be easily made compliant with all of the requirements established in today's final rule. While the agency believes that the requirements beyond the field of view are crucial in ensuring the quality of rear visibility systems in the long run, we have limited the phase-in schedule to be applicable only to the field of view requirement in order to avoid significantly increasing the costs of this rule by requiring that manufacturers conduct expensive equipment redesigns outside of the normal product cycle. In spite of this change, the agency does not expect the estimated benefits of this rule to be diminished during the phase-in period because the estimated benefits were based on research conducted using rear visibility systems which did not meet all the requirements established in today's final rule. However, the agency expects that this increased flexibility during the phase-in period will allow vehicle manufacturers to avoid incurring the significant costs associated with redesigning rear visibility systems outside of the normal product cycle and instead focus those resources on installing more rear visibility systems on a greater number of vehicles in the near term.

Second, today's final rule does not utilize separate phase-in schedules for passenger cars and other vehicles such as MPVs and trucks. As discussed later in this notice, we find that requiring separate phase-ins for different types of vehicles could increase compliance costs without leading to an increase in application of the rear visibility countermeasure. Third, in light of the additional flexibilities granted above, today's final rule does not adopt the carry-forward credit system proposed in the NPRM. Finally, although the percentage targets of the fleet to be equipped with the required rear visibility system remain unchanged for each year, today's final rule adjusts the phase-in schedule so that the schedule does not begin until May 1, 2014 (with the first year requiring compliance being May 1, 2016 to April 30, 2017).

Separately, today's final rule does not adopt the luminance requirements from the NPRM. The luminance requirements proposed in the NPRM have significant practical challenges at this time. It is not clear that the proposed requirements would provide the intended safety benefits as a luminance requirement alone may not afford a driver a clear image of the area directly behind the vehicle. As the agency is unaware of any other practicable method of ensuring a quality display of the area behind the vehicle without restricting reasonable technological options, today's final rule does not contain luminance requirements.

b. Applicability

The provisions of the K.T. Safety Act require a broad application of improved rear visibility countermeasures by defining the term ''motor vehicle'' as vehicles less than 10,000 pounds excluding only motorcycles and trailers. However, the K.T. Safety Act allows the flexibility to prescribe different requirements for different types of vehicles. Thus, in the ANPRM, the agency considered various characteristics of the vehicles covered under the K.T. Safety Act and requested public comment. Specifically, the agency examined the relative backover crash risks associated with trucks, MPVs, and vans. Further, it examined the possible association between blind zone size and relative crash risk.

The advocacy group and equipment manufacturer commenters on the ANPRM generally expressed support for universal applicability of rear visibility countermeasures to vehicles contemplated by the K.T. Safety Act. These commenters stated that widespread application affords the greatest level of protection and that the available data show that the backover crash problem is widely dispersed such that it should be applied to all vehicle types. On the other hand, vehicle manufacturers generally commented that the applicability of this rule should be limited to vehicles with the highest risk of backover crashes. Nissan and General Motors both recommended a maximum blind zone regulation to determine which vehicles require the rear visibility countermeasure. Mercedes specifically recommended that the agency limit the countermeasures to trucks, MPVs, and vans, should NHTSA find that those vehicles are overrepresented in the crash data.

Separately, Blue Bird suggested in its comments that smaller buses not be included in any potential rule. Blue Bird stated that these buses have not been involved in fatalities, that drivers of such buses are better trained because they have commercial licenses, and that this regulation would impose a disproportionate amount of costs on these vehicles since small buses do not generally have navigation systems. Conversely, Rosco commented that small buses are often used to transport children and should be covered in any potential rules.

After consideration of the comments on the ANPRM, NHTSA proposed in the NPRM to apply the rear visibility requirements to all vehicles with a GVWR of 10,000 pounds or less (excluding motorcycles and trailers). The agency reasoned that, to apply rear visibility requirements consistently to all the aforementioned vehicles would best address the backover safety risk and fulfill the intent of Congress in the K.T. Safety Act. In regards to the safety risk, the agency noted that backover incidents are not limited to any particular type of vehicle and that no vehicle type provides the driver with a sufficient rear view to avoid the types of backover crashes contemplated by Congress in the K.T. Safety Act. Speaking specifically of MPVs, trucks, and vans, the NPRM noted that these vehicle types are overrepresented in fatal crashes. However, passenger cars still contribute to backover crashes (resulting in either an injury or a fatality) at a rate that is similar to their proportion of the vehicle fleet. Thus, the agency did not believe it would be in the best interests of safety to limit the rearview countermeasure to certain vehicle types. Further, the NPRM did not include a minimum blind zone threshold to determine the applicability of rearview countermeasures. The data available to the agency showed a correlation between the size of the blind zone and backing incidents when a wide area behind the vehicle is considered. However, the data showed a weak relationship between blind zone size and backing incidents when considering the areas immediately behind the vehicle where the agency believes backover crashes are most likely to occur.[58]

While acknowledging the difficulties cited by Blue Bird, we proposed to include small buses under the proposed rule for similar reasons as described above. In the NPRM, we tentatively concluded that to exclude small buses

[58] We also did not see a correlation between blind zone size and *backover* accidents. In 2008 we conducted an analysis based on blind zones and crash data for 28 vehicles. We did not find a statistically significant correlation between blind zone and backover risk, but we have not studied this issue further since that time.

would be contrary to the intent of Congress in the K.T. Safety Act as the intent of Congress was to apply improved field of view requirements to all the vehicles covered by the K.T. Safety Act. The agency further noted that small buses are often involved in transporting children and do not afford a rear field of view which enables a driver to avoid the backing incidents contemplated by Congress.

While noting that commenters on the ANPRM did not comment on the issue of the applicability of this rule to low-speed vehicles, the agency proposed to include low-speed vehicles under the proposed rule. NHTSA stated in the NPRM that it could not determine, from the available data, whether or not low-speed vehicles have been involved in real world backover incidents. Thus, the NPRM sought data relating to the involvement of low-speed vehicles in rear world backover incidents.

Comments

In general, the comments that the agency received in response to the NPRM have reiterated the concerns put forward by the commenters on the ANPRM. Both the Advocates and Brigade commented that there should be no exclusion of any vehicles that are covered under the K.T. Safety Act. IIHS supported these sentiments specifically stating that sport utility vehicles should be subject to the improved rear visibility requirements of this rulemaking. The Advocates went on to assert that the lack of recorded case incidents should not preclude the agency from concluding that a vehicle type (such as school buses) presents a safety risk. The organization also contended that while the operational conditions of certain vehicles may have additional safeguards, it is possible that those conditions will change during the life of the vehicle. In the example of school buses, the Advocates noted that while school buses generally have operating procedures and experienced drivers to safeguard children; such buses can be re-purposed for different activities.

Conversely, different commenters expressed support for excluding certain types of vehicles from the requirements of this rulemaking. The School Bus Manufacturers Technical Council commented that school buses should be excluded from the rear visibility requirements. The organization asserted that current regulations already afford additional and adequate rear visibility requirements for school buses. Further, the organization reasoned that (1) school buses typically do not transport the most vulnerable population (0–5 year olds), (2) school children around school buses are normally supervised by adults, and (3) school bus drivers have more stringent commercial driver's license training. Without offering additional information, the Alliance commented that police vehicles should not be subject to the improved rear visibility requirements. Additionally, an individual commenter, Mr. Ben Montgomery conveyed in his comments that rearview video systems will add no improvement to rear visibility for low-speed vehicles and opined that to require additional rear visibility for low-speed vehicles would be excessive. Finally, Porsche asserted that passenger cars should be addressed in a separate rulemaking, as passenger cars (especially smaller vehicles) have different visibility needs. It contended that NHTSA should not take a ''one-size fits all'' approach to improving rear visibility.

Further, while the NPRM did not include a provision for determining applicability of this rule based on a vehicle blind zone threshold, IIHS continued to express concern regarding the large blind zones that can exist on some vehicle models. The organization stated that NHTSA should regulate the size of vehicle blind spots because manufacturers should be precluded from making design choices which create unusually large blind zones.

Finally, the agency received comments from individuals requesting that today's final rule apply to vehicles not contemplated by the K.T. Safety Act. Specifically, various individual commenters suggested that trailers, garbage trucks, and other vehicles with a GVWR greater than 10,000 pounds often have even larger blind zones than the vehicles included in this rulemaking and should be covered by today's final rule.

Agency Response

For the reasons that we noted in the NPRM, today's final rule applies to all vehicles with a GVWR of 10,000 pounds or less, except for motorcycles and trailers, as was contemplated in the K.T. Safety Act. It continues to be the position of this agency that the K.T. Safety Act requires that today's final rule expand rear visibility requirements for all vehicles covered by the Act. In addition, the agency believes that there are compelling safety reasons for applying the rear visibility requirements of today's final rule to all the aforementioned vehicles. While many commenters contended that the requirements of today's final rule should apply differently to different vehicle types, the available data do not support such a contention. As discussed above, backover crashes are not limited to any particular type of vehicle and the agency is not aware of any vehicle type that categorically provides the driver with a sufficient rear field of view so as to avoid the types of backover incidents contemplated by Congress in the K.T. Safety Act.[59] Thus, in addition to the constraints placed on the agency by the K.T. Safety Act, the agency does not believe it is appropriate to apply the requirements of today's final rule based on vehicle type.

While we agree with the aforementioned commenters that school buses and police vehicles may have unique operating conditions, such as more stringent driver training, we do not believe that such operating conditions sufficiently compensate for the fact that drivers of these vehicles simply do not have access to a field of view that would enable them to avoid backover crashes. We note that school buses and police vehicles often operate in residential areas and can have significant exposure to young children and the elderly.

Further, we note that the latest agency research indicate that low-speed vehicle blind zones vary greatly within this vehicle class. Some also contain significant blind zones similar to other passenger cars and light trucks. However, some others may have very small blind zones.[60] As low-speed vehicles may have a GVWR of up to 3,000 lbs., these vehicles are also fully capable of causing injury and death to vulnerable pedestrians.[61] As backover crashes do not typically occur at speeds above 25 mph (the top speed of low-speed vehicles), we believe it is appropriate to include low-speed vehicles in today's final rule. Further, the agency requested comment on low-speed vehicles in the NPRM and sought information as to whether the agency could reasonably conclude that low-speed vehicles present no unreasonable risk of backover crashes, but no

[59] The rule requires rearview video systems in all covered vehicles, regardless of whether a driver of a particular vehicle has full view of the zone behind the vehicle by looking directly out of the rear of the vehicle or by looking in rearview or side mirrors. As discussed below, the agency is aware of one LSV where this may be the case. Manufacturers of other types of vehicles who believe the blind zone of their particular vehicle is designed so as to enable drivers to avoid backover crashes without a rear visibility system are also able to petition the agency as described in that section.

[60] *See* Mazzae, E. N. (2013), Direct Rear Visibility Measurement Data: 2010–11 Passenger Cars and 2008–2010 Low-Speed Vehicles, National Highway Traffic Safety Administration, *available at* Docket No. NHTSA–2010–0162–0252.

[61] However, as we mentioned in the NPRM, the agency is not aware of any backover crash involving a low-speed vehicle. Our information, at this point in time, continues to be the same.

commenter provided any substantive information on this point. Therefore, the agency cannot reasonably exclude, as a category, low-speed vehicles from the requirements of today's rule because the available information suggests that the visibility needs of these vehicles vary widely within the vehicle class.[62]

As mentioned in the NPRM, we also decline to separate passenger cars from this rulemaking. While we acknowledge that smaller passenger cars have different visibility needs from large MPVs and trucks, the data show that a large and significant portion of backover crashes are attributable to passenger cars. Further, the data indicate a positive, but not statistically robust, relationship between the size of the blind zone of a given passenger vehicle and the likelihood that it may be involved in a backing crash (i.e., all types of reverse crashes).[63] In addition, the areas immediately behind the vehicle, which are covered by the blind zone of virtually all vehicles, are the areas that the Monte Carlo simulation indicates are associated with the highest backover crash risk (risk of crashes in the reverse direction with pedestrians or cyclists). Thus, today's final rule applies equally to all vehicles with a GVWR of 10,000 pounds or less (regardless of the size of the vehicle's blindzone), except for motorcycles and trailers.

However, we decline to regulate the size of vehicle blind zones (independently from determining the applicability of rearview countermeasures) in this rulemaking as suggested by the IIHS. While blind zone sizes were researched and explored in this rulemaking, this was done as a possible approach in which the agency could determine whether certain vehicle types should be required to have different rear visibility countermeasures. As regulating the size of the blind zone (independent of the purpose of detecting pedestrians immediately behind the vehicle) was never explored in this rulemaking process, we decline to include such a requirement in today's final rule.

Finally, we also decline to extend today's final rule to cover trailers, garbage trucks, and other vehicles not contemplated by the K.T. Safety Act. While we acknowledge that many of these vehicles may also have significant blind zones, we have concentrated our research and rulemaking efforts on the vehicles mandated by Congress. We believe that, by focusing on the vehicles types covered in the K.T. Safety Act, this rulemaking is able to more appropriately address the types of crashes that Congress sought to avoid. To include and accommodate vehicles with a GVWR of 10,000 lbs or more (many of which are used for commercial purposes), the agency may be required to utilize a significantly different approach with different requirements and test procedures that may not be as closely tailored to avoiding the types of crashes contemplated by the K.T. Safety Act. Further, we note that backover crashes involving vehicles with a GVWR less than 10,000 lbs represent a significant majority of both fatalities and injuries. As this rulemaking has continuously focused exclusively on vehicles covered by the K.T. Safety Act, to introduce requirements regarding other vehicles in today's final rule would raise questions regarding the sufficiency of the scope of notice of this rulemaking. Thus, today's final rule declines to introduce such requirements at this time.

c. Alternative Countermeasures

The provisions of the K.T. Safety Act require this rulemaking to expand the required field of view in order to enable drivers to detect areas behind the motor vehicle in order to reduce death and injuries resulting from backing incidents. Congress emphasized that the objectives of the K.T. Safety Act may be met through the provision of technologies such as additional mirrors, sensors, and cameras. In the NPRM, the agency understood Congress' intent as not to require that a driver literally *see* a rearview image because such a reading would render the aforementioned reference to sensors in the text of the K.T. Safety Act superfluous—thereby violating a basic canon of statutory interpretation. Accordingly, NHTSA has conducted research into the effectiveness of each of the suggested countermeasure technologies, reported its findings in both the ANPRM and NPRM, and has received comments in response to both notices.

The agency has consistently noted that a successful rear visibility countermeasure must not only accurately detect objects behind the vehicle, but must also induce sufficient braking so as to avoid the crash. In the ANPRM, we examined the results noting the ongoing efforts of various studies intended to evaluate the effectiveness of mirror, sensor, and rearview video countermeasure systems. We outlined our observations which indicated that rear-mounted convex mirrors generally have a field of view of approximately 6 feet radially from the location of the mirror and significantly distort the image of the reflected objects.[64] Further, while cross-view mirrors offer a greater range of view, they do not enable a driver to detect areas directly behind the vehicle.[65] With regard to sensor systems, we noted that while commercially available systems have been designed as parking aids as opposed to safety devices, they have inconsistent performance for detecting small children.[66] Further, the ANPRM cited a General Motors-sponsored study[67] which indicated that sensor warnings generally failed to induce drivers to brake with sufficient force to avoid a backover crash. We also noted

[62] The agency also considered offering an alternative compliance option for certain low-speed vehicles, based on their direct view visibility. However, to adopt an alternative compliance option during the final rule stage would raise questions regarding the scope of notice. We note that various options are available to low-speed vehicle manufacturers who believe that their vehicles are designed so as to enable drivers to avoid backover crashes without a rear visibility system. Such manufacturers may petition for a temporary exemption under 49 CFR Part 555 if they can demonstrate that their vehicle design is as safe as vehicles complying with the standard. They may also petition the agency for rulemaking to afford such vehicles (offering an equivalent level of safety) an additional compliance option in FMVSS No. 111. (*See* Section III. c. Alternative Countermeasures, below, for further information on petitioning the agency for further rulemaking). Finally, we note that the phase-in schedule adopted by today's final rule is unlikely to require any low-speed vehicles to comply with today's final rule until the final 100% compliance date in 2018.

[63] As the crash data is more scarce for *backover* crashes, most of our research has focused on the relationship between blind zones and backing crashes (rather than the relationship between blind zones and *backover* crashes). NHTSA performed two analyses of the relationship between rear blind zone size and backing crash incidence. The first used human-measured rear visibility data and is reported in detail in the docketed 2008 NHTSA report ''Rear Visibility and Backing Risk in Crashes'' (Docket No. NHTSA–2009–0041–0003). The second, subsequent analysis used vehicle rear visibility data acquired using a laser-based visibility measurement technique and is summarized in the 2009 NHTSA report ''Rear Visibility Measured by Laser Light Beam Simulation of Driver Sight Line Compared to Backing Risk in Crashes'' (Docket No. NHTSA–2009–0041–0053). These studies estimated backing crash risk from police-reported crashes in the State Data System and compared this risk to the rear-visibility measurements. Simple correlations and logistic regression analysis suggested an association between the risk of a backing crash and the blind zone measured over a extremely wide area (50–60 feet in width by 50 feet longitudinal distance). However, the results were significantly weaker for blind zones measured in areas that we believe a driver would be using for a typical backing maneuver and for the longitudinal sight distance. NHTSA's also examined the relationship between blind zone size and backover crashes in 2008 and did not find a relationship. That study compared the 28 vehicles with available crash data and the agency has not updated the study since.

[64] 75 FR 76197.

[65] *Id.*

[66] 75 FR 76198.

[67] 74 FR 9495; Green, C. and Deering, R. (2006). Driver Performance Research Regarding Systems for Use While Backing. Society of Automotive Engineers, Paper No. 2006–01–1982.

in the ANPRM that our research indicated that drivers equipped with both rearview video systems and sensor systems seemed to avoid obstacles less successfully than drivers equipped with video-only systems.[68] We conjectured that drivers may have looked at the video system less when also equipped with a sensor system, but we requested public comment on possible reasons for this observed trend.

Several commenters on the ANPRM, including the Consumers Union, KidsAndCars.org, IIHS, Blue Bird, Magna, and Nissan stated that rear mounted mirror systems are generally not adequate for avoiding the backover crashes contemplated by Congress in the K.T. Safety Act. Several other commenters, including the Alliance and Mercedes, suggested that adopting the ECE R.46 regulation would help to prevent a substantial number of backover crashes. They reasoned that the ECE R.46 regulation, which allows for convex driver side view mirrors (as opposed to the current FMVSS No. 111 requirement of a planar driver side view mirror), would afford drivers additional time to avoid backover crashes which involve pedestrians moving into the vehicle's reversing path from the side.

Further, multiple commenters on the ANPRM, such as Delphi and Ackton, suggested that NHTSA's research may have underestimated the effectiveness of sensor systems as the available sensor systems were designed as parking aids and not for the purpose of detecting objects such as pedestrians. Other commenters such as Magna and Continental suggested that future applications of sensor technologies such as infrared systems and sensor-initiated automatic braking were in active development and would yield greater accuracy and effectiveness for sensor countermeasure technologies. Conversely, commenters such as IIHS noted that drivers' slow and inconsistent reactions to sensor warnings should preclude NHTSA from requiring or allowing sensors in lieu of rearview video systems.

After the ANPRM, the agency conducted additional research in order to better determine the effectiveness of each countermeasure. Our additional research after the ANPRM indicated that drivers utilizing either the rear-mounted convex mirrors or the cross-view mirror systems were unable to avoid the unexpected obstacles that were presented during the test.[69] Further, the same study found that even in tests with consistent (100%) object detection by the vehicle sensors, drivers reacted to the sensor warning in a way that avoided the backover crash in only 18 percent of the tests.[70] Similar to the results of the General Motors study noted in the ANPRM, our research, including a 2010 study, found that sensor warnings tended to induce drivers to apply some measure of braking or stop momentarily, but did not induce drivers to come to a complete stop so as to avoid the backover crash.[71]

Given this additional research and the comments on the ANPRM, the agency stated in the NPRM that rearview video systems are the most effective, currently available technology in aiding drivers to avoid the backover crashes contemplated by Congress in the K.T. Safety Act. Thus, the NPRM tentatively concluded that drivers need to have access to a visual image of an area measuring 5 feet to either side of the vehicle centerline and extending 20 feet behind the vehicle's rear bumper in order to successfully avoid a backover crash. However, conscious of the potential for new technologies and differing approaches to providing the driver with the required field of view, the proposed rule did not preclude the additional use of mirrors and/or sensors to complement a system producing the required field of view.

Comments

Several equipment manufacturer comments disputed the agency's conclusion in the NPRM that a rearview image is necessary in order to enable a driver to effectively avoid a backover crash. Such commenters contended, for various reasons, that the rear visibility requirements should not preclude systems that do not provide a rearview image. For example, Sense Technologies noted that the research completed by NHTSA did not accurately evaluate the effectiveness of sensor and mirror systems. In terms of sensors, Sense Technologies noted that NHTSA's studies utilized ultrasonic sensors instead of Doppler sensors (which it asserted are more reliable). Sense Technologies asserted that Doppler radar-based systems should have been considered and that visual warnings should supplement—and not replace—auditory warnings. In regard to mirrors, Sense Technologies noted that cross-view mirrors are intended to be utilized in conjunction with a sensor or a rearview video system and their effectiveness should not have been evaluated based on testing as a stand-alone product. It further advocated that cross-view mirrors are more effective at detecting pedestrians that move laterally into the vehicle's blind zone.

Other equipment manufacturers expressed similar concerns by stating that the final rule should not preclude systems that do not provide a rearview image. Valeo supported this sentiment by arguing that manufacturers should be able to choose which system or combination of systems is best suited to achieve the goal of preventing backovers. Similarly, Rearscope commented that the requirements should permit the consumer to choose the technology or combinations of technologies that would be suitable. Rearscope also contended that these technologies must be further researched and that rulemaking should be delayed until this research can be completed. Finally, IFM Electronic also stated that the final rule should not preclude a system that does not provide a rearview image such as its 3D Photonic Mixer Device, which it claimed will be more effective than the ''2D'' rearview image required under the proposed rule.

On the other hand, some equipment manufacturers expressed support for the NPRM's conclusion that a rearview image is necessary to enable drivers to effectively avoid backover crashes.

[68] 74 FR 9496.

[69] 75 FR 76222–23. In its 2005 NPRM proposing to require straight trucks with a gross vehicle weight rating (GVWR) of between 4,536 kilograms (10,000 pounds) and 11,793 kilograms (26,000 pounds) to be equipped with a rear object detection system, the agency had tentatively estimated the effectiveness of mirrors using a 1984 pilot study by Federal Express that purported to show a 33% effectiveness estimate for its trained drivers using backing mirror systems. *See* 70 FR 53753. While the agency cited these values in a previous notice, the pilot study results were never made available for public review and therefore could not be evaluated during the research for this rulemaking. Thus, we have utilized the data from the agency's research which show that drivers utilizing rear-mounted convex mirrors or the cross-view mirror systems were unable to avoid the unexpected obstacles that were presented during the test.

[70] While the NPRM (at 75 FR 76223) stated that drivers avoided the staged backover crash test objects only 7 percent of the time (as opposed to 18 percent), the NPRM data did not include results from the study where NHTSA conducted a similar controlled backover experiment to see if drivers would react better to rear visibility countermeasures in a setting where they expected the presence of children (the study was conducted in a day care parking lot). The NPRM referenced this study (at 75 FR 76226) and indicated that this study would be placed into the docket. Further, the agency docketed the results from this study on December 3, 2010 (Docket No. NHTSA–2010–0162–0001)—shortly before the publication of the NPRM. However, as NHTSA was unable to include the results from the day care study at that time, we have included those results in our analysis for today's final rule. We have included these results in our analysis. For further information, please reference Docket No. NHTSA–2010–0162–0001 and the Final Regulatory Impact Analysis prepared in support of this rule (available in the docket number referenced at the beginning of this document).

[71] *See* Docket No. NHTSA–2010–0162–0001, Drivers' Use of Rearview Video and Sensor-Based Backing Aid Systems in a Non-Laboratory Setting.

Brigade agreed that sensors do not provide adequate protection because the commercially available systems do not detect small children reliably and that if a single system must be chosen, it should be a video system. Magna also agreed that sensors alone are ineffective by stating that ultrasonic waves do not travel through dry air with sufficient speed so as to react quickly enough to a moving object behind the vehicle. However, both of these commenters expressed support for combination sensor and video systems as a possibility for providing increased protection to pedestrians.

Other commenters on the NPRM also expressed support for combination sensor and video systems. For example, the Consumers Union commented that audible cues would be useful to prompt the driver to look at the rearview image when an obstacle is detected. Similarly, the Automotive Occupant Restraints Council asserted that a combination system can compensate for the fact that the driver cannot be looking at a rearview image and looking backwards at the same time. While noting support for combination systems, Rosco agreed with the proposed rule that the final rule should not require specific additional equipment beyond the rearview image. Rosco contended that this will afford manufacturers the flexibility to utilize additional driver aids as required by different market segments. In its comments, Gentex cautioned against concluding that combination systems would be inferior to video-only systems as studies have not been conducted on combination systems involving a rearview mirror-mounted display.

Separately, several commenters stated that the final rule should not preclude future technologies that may develop and instead should encourage the development of advanced rear visibility systems. Delphi and MEMA suggested that an NCAP-type system be established to encourage the development of new rear visibility technologies. In addition, Continental and BMW expressed concern that the proposal would inhibit technologies such as thermal imaging and automatic pedestrian detection with automatic braking.

Separately, some commenters expressed support for a system which would activate the vehicle brakes automatically upon detecting a pedestrian. The Automotive Occupant Restraints Council suggested in its comments that a rear visibility system would be more effective if the electronic stability control system would intervene to prevent the driver from a backover crash if the system detects that such a crash is imminent. IFM also suggested that a vehicle should automatically intervene to stop the vehicle when a backover crash is imminent regardless of whether the vehicle utilizes a sensor or a visual system.

Finally, Ford continued to express the opinion that NHTSA should consider alternatives for passenger cars such as adopting the ECE R.46 requirements for side view mirrors. Further, Brigade generally suggested in its comments that there would be a great advantage in harmonizing the requirements of this rulemaking with those of ECE R.46.

Agency Response

We acknowledge that some commenters disagreed with our tentative conclusion in the NPRM regarding the current need for providing a visual image of the area immediately behind the vehicle. However, we continue to believe, based on the types of currently available technology, the weight of the research, our consideration of the public comments, and other available information, that systems affording drivers the ability to see the area behind their vehicles are the most effective way of achieving Congress' goal of reducing backover crashes. The technology used to achieve that goal must not only detect the pedestrian behind the vehicle, but also effectively influence the driver to stop his or her backing maneuver. The agency continues to believe that in order to identify an effective technology for reducing backover crashes one must evaluate not only system performance, but also driver performance when assessing the overall effectiveness of a backover crash countermeasure. When taking these considerations into account, the data show that systems (such as sensor-only systems) that do not afford drivers a view of the area behind the vehicle do not effectively assist drivers in avoiding the backover crashes contemplated by Congress in the K.T. Safety Act.

Ultrasonic Sensor Systems Do Not Effectively Assist Drivers in Avoiding Backover Crashes

To be effective, a sensor-only system that does not afford the driver a view of the area behind the vehicle must reliably detect the presence of a person, detect a person at a sufficient distance, and drivers must react appropriately to avoid the crash.[72] A sufficient distance means a distance greater than the distance that a vehicle travels between the time when the person first enters within the detection zone of the sensors and the time when the driver brings the vehicle to a halt. Reliable detection means that the system must issue a warning to the driver when a person, regardless of size or orientation, is located within the detection zone of the sensor system. Appropriate driver response means that the driver heeds the warning of the system and reacts so as to avoid the crash.

Ultrasonic sensor systems are the most common type of sensor system found in automotive applications. However, through its research, the agency has found various significant limitations on the ability of these systems to perform sufficiently in the three aforementioned areas. First, the available data indicate that the ability of sensor-only systems to detect reliably an object that is within its design range varies significantly depending on the material and the surface area of the object. In the static tests run in NHTSA's 2006 sensor study,[73] the agency conducted tests of sensor-only systems using test objects that were easily detected by those systems (e.g., a 36-inch traffic cone and a 40-inch PVC pole) to determine the extent of the ultrasonic sensor detection range. The sensors generally detected the objects at a range between 5 and 8 feet.[74] However, the performance of the ultrasonic sensor systems deteriorated significantly when the agency tested objects that were smaller (i.e., had less surface area) and/or did not reflect sensor signals as well. In the agency's research, 1 and 3-year-old children (and Anthropomorphic Dummies) were detected poorly by the sensors.[75] A

[72] These three requirements closely follow the three factors considered in the Final Regulatory Impact Analysis: Crash avoidability (F_A), system detection reliability (F_S), and driver use of the system (F_{DR})—discussed further in Section IV. *Estimated Costs and Benefits, infra.*

[73] Mazzae, E.N., Garrott, W.R., (2006) Experimental Evaluation of the Performance of Available Backover Prevention Technologies. National Highway Traffic Safety Administration, DOT HS 810 634.

[74] We believe that these objects illustrate the design detection range of the sensor systems as they are objects that can be easily detected by these systems and were the objects that were most consistently detected at the greatest range in our testing. The only system that could detect beyond 5–8 feet was the Lincoln Navigator system which utilized two ultrasonic sensors and a radar sensor. Our general observations of this setup indicate that, while the radar sensor on the Navigator had a significantly greater range that the ultrasonic sensors, it also was significantly less consistent in detecting across its detection area than the ultrasonic sensors.

[75] NHTSA's 2006 sensor study tested 1 and 3 year old Anthropomorphic Dummies (ATDs) (29.4 inches and 37.2 inches in height, respectively) dressed in clothing. The study found that these ATDs were inconsistently detected by some systems

shorter traffic cone, with better reflectivity than the children and child-like objects, was detected significantly better by all tested systems.[76] On the other hand, although the adult test objects have similar material qualities to the children, despite also having poor reflectivity, detection was better because they have greater surface area when compared to children.[77] Thus, the data indicate the ultrasonic sensors are less able to detect children within their design detection zone as children generally do not reflect sensor signals as well as the test objects in the 2006 study and children generally do not have a large surface area to compensate for poor sensor signal reflectivity.

Second, the ability of ultrasonic sensor systems to reliably detect an object that is within its design range also varies significantly depending on the height/orientation of the object. Regardless of the surface area or reflectivity of an object, an object may be imperceptible to the ultrasonic sensor system if it is too close to the ground. For example, even though an adult that is lying on the floor has a large surface area to compensate for poor reflectivity, the data show that he/she will not be detected in this situation because the ultrasonic sensor systems have not been mounted/programmed so as to detect objects close to the ground. While the aforementioned 36-inch traffic cone was reliably detected up to a distance of between 5 and 8 feet in the 2006 sensor study, the same systems in that study were virtually unable to detect the 12-inch traffic cone (which had the same general material and composition as the 36-inch traffic cone).[78] One of the systems improved with detecting the 18-inch traffic cone.[79] However, systems were generally not able to match the detection zone of the 36-inch traffic cone until the traffic cone height was increased to at least 28 inches.[80] Thus, even though sensor systems tested by NHTSA had a design detect range extended up to between 5 and 8 feet, the above data demonstrate that there can be considerable areas where objects are not detectable within this design detection range when considering shorter test objects or certain object orientations.[81]

Third, even if the object is easily detected by the sensors, the design detection range of the ultrasonic sensor systems is generally not sufficient to enable a driver to avoid a backing crash. Although the data show that ultrasonic sensors detect adults up to between 5–8 feet from the vehicle bumper, drivers backing at a speed greater than approximately 2.0 mph will be unlikely to avoid the crash.[82] The data show that, it would take between 4.7 to 6.4 feet to stop the vehicle from 2.0 mph and 13.4 to 17.5 feet to stop the same vehicle from 5.0 mph.[83] Further, the available data suggest that most drivers conduct backing maneuvers at speeds greater than 2.0 mph.[84] Thus, in situations where the pedestrian enters the sensor design detection zone after the vehicle has started backing, it is unlikely that the driver will avoid the crash (even assuming perfect sensor detection and quick driver response).

Finally, our research continues to indicate that drivers tend not to react in a timely and sufficient manner in response to sensor warnings to avoid a backover crash with an unexpected pedestrian. In NHTSA's 2008, 2009, and 2010 studies on driver use of these systems, drivers only avoided collisions with the unseen test object using sensor systems in 18% of the cases despite the fact that the sensor system detected the object and warned the driver in all cases.[85] In both the NHTSA studies mentioned above and in a GM study referenced in the ANPRM,[86] many drivers responded to a sensor warning by exhibiting precautionary behavior (e.g., braking slightly or stopping the vehicle to check surroundings again). However, very few stopped fully to avoid the crash. In GM's study, 87% collided with the test object, but 68% of drivers exhibited precautionary behavior.[87] Thus, even when assuming that the driver is backing at a sufficiently low speed and that the sensor system detects the rear obstacle perfectly, drivers often do not react appropriately so as to avoid the crash when the obstacle is unexpected or unseen.

Thus, after considering the above data, the agency does not believe that ultrasonic sensor-based systems meet the need for safety (i.e., able to detect pedestrians and lead to a sufficient percentage of drivers avoiding the backover crash). These systems leave little room for driver error/indecision and poor system reliability with regard

when placed in locations close to the vehicle bumper and that all the tested systems could only detect the ATDs reliably up to a range between 2 and 6 feet. *See* Mazzae E.N., (2006) Experimental Evaluation of the Performance of Available Backover Prevention Technologies, *supra.* This study also found similar (but slightly worse in certain locations) results with real children aged 1 and 3 (30 inches and 40 inches tall, *See id.* respectively).

[76] NHTSA's 2006 sensor study found that a 28 inch traffic cone—slightly shorter than both the ATDs and the real children—could be detected up to a range of 5 to 8 feet. *See id.*

[77] The 2006 sensor study also found that an adult male was detected about as well as the idealized test objects (i.e., the system could detect the adult male up to a distance of between 5 and 8 feet rearward of the rear bumper). *See id.*

[78] Of the systems that detected the 12 inch cone, they were only able to do so at distances greater than 4 feet but no greater than 8 feet from the bumper. In other words, for short objects, even the best sensors systems had a significant zone between the vehicle's bumper and 4 feet from the bumper where the 12 inch traffic cone was undetectable. *See id.*

[79] *See id.*

[80] *See id.*

[81] The NHTSA 2006 sensor study also tested an adult male lying down parallel to the vehicle bumper at different locations. Detection by all systems was inconsistent and only one system could detect the adult close to the bumper. *See id.*

[82] For reference, the NHTSA 2006 sensor study measured the *idling* speed of the vehicles (i.e., speed when vehicle is in reverse and no brake or throttle is being applied) in the study. Of the vehicles utilized by NHTSA in that study, the idling speed ranged from 4.0 mph to 7.0 mph. This data suggest that vehicles traveling backward at an idle engine speed travel at speeds that can be double the 2.0 mph speed where drivers can be reasonably expected to bring a vehicle to stop within 5–6 feet. *See* Mazzae E.N., (2006) Experimental Evaluation of the Performance of Available Backover Prevention Technologies, *supra.*

[83] *See id.* The agency calculated these distances based on a start time that assumed the vehicle is already traveling at the given speed (2.0 mph or 5.0 mph). Then the calculation took into account driver reaction time (i.e., time it takes for driver to apply brakes after receiving a warning), sensor system detection response time (i.e., time between the presentation of the test object and the system warning signal), and brake application time (i.e., time between initiation of braking and maximum deceleration rate is reached). The agency further assumed that vehicles decreased speed at a constant rate (the maximum deceleration rate) once the initial brake application time had elapsed. Driver reaction time was 1.17 seconds. *See* Mazzae, E.N., Baldwin, G.H.S., Barickman, F.S., Forkenbrock, G.J. (2003) Examination of driver crash avoidance behavior using conventional and antilock brake systems, National Highway Traffic Safety Administration, DOT HS 809 561. Brake application time was assumed to be 0.25 seconds and system response time ranged from 0.18 to 0.74 seconds. *See* Mazzae E.N., (2006) Experimental Evaluation of the Performance of Available Backover Prevention Technologies, *supra.*

[84] In NHTSA's 2008 driver use study, drivers conducted backing maneuvers and at average speed of 2.26 mph and drivers' average *maximum* backing speed was 3.64 mph. *See* Mazzae, E.N., et al. (2008) On-Road Study of Drivers' Use of Rearview Video Systems (ORSDURVS), *supra.* A separate NHTSA study from 1995 also found similar results by observing that the average maximum backing speeds were generally 3.0 mph (when excluding the extended backing maneuvers that can be as fast as 11 mph). *See* Huey, R. Harpster, H., Lerner, N., (1995) Field Measurement of Naturalistic Backing Behavior. National Highway Traffic Safety Administration. DOT HS 808 532.

[85] *See* Mazzae, E.N., et al. (2008) On-Road Study of Drivers' Use of Rearview Video Systems (ORSDURVS), *supra, see also* Docket No. NHTSA–2010–0162–0001, Drivers' Use of Rearview Video and Sensor-Based Backing Aid Systems in a Non-Laboratory Setting. Drivers utilizing rearview video systems avoided the collision in 48% of the tests and drivers utilizing no countermeasure avoided the collision in 0% of the tests.

[86] *See* ANPRM, 74 FR 9495, *see also* Green, C. and Deering, R. (2006) Driver Performance Research Regarding Systems for Use While Backing, SAE Paper No. 2003–01–1982.

[87] *See id.*

to object detection. As shown above, these systems generally do not detect persons reliably in their detection zones. Their ability to detect humans can degrade significantly due to material composition (e.g., clothing), surface area, and height/orientation. Even assuming perfect detection, ultrasonic sensor systems do not have adequate range to assist drivers in avoiding crashes with pedestrians that appear in the sensor detection zone after the backing maneuver has begun. In addition, typical driver reactions to the sensor system warnings do not result in crashes being averted. These limitations lead the agency to conclude in today's final rule that sensor-only systems would not adequately address the backover crash problem that Congress directed NHTSA to address in the K.T. Safety Act.

Redesigning Ultrasonic Systems Is Unlikely To Improve Driver Performance

The agency is aware that many ultrasonic systems have been designed as parking aids (i.e., mounted at certain angles and programmed so that they pick up large objects as opposed to small children) and that certain adjustments to these systems may increase the likelihood that these systems will detect people and children. However, the potential solutions that the agency is aware of do not seem to adequately address the safety need in question in this rulemaking. Should the agency design a test procedure that addresses the concerns regarding poor detection of children, manufacturers may adjust the pitch of their sensors and sensitivity of their sensors to detect the agency's test objects designed to mimic children. However, in this scenario, the sensors would also detect curbs and other objects resulting in a greater number of false positives (i.e., issue alerts when no obstacle exists behind the vehicle) than they currently do when mounted so as to only detect large objects (such as a parked car). As mentioned above, the available research indicates that drivers generally do not react sufficiently to warnings regarding objects behind the vehicle when they cannot visually confirm the presence of an obstacle or when drivers do not expect the presence of an obstacle. The agency's concern that drivers do not trust the sensor warnings would be aggravated by the potential solutions to improve ultrasonic sensor performance (that would also increase false positives). Therefore, the agency does not believe that redesigning ultrasonic sensor systems is practicable at this time and would not help drivers avoid the types of backover crashes contemplated by Congress in the K.T. Safety Act.

Other Sensor-Only Systems Also Do Not Effectively Assist Drivers in Avoiding a Backover Crash

While the agency is aware of other sensor technologies and that there are potential future technologies that may perform better than ultrasonic sensors, the agency is not aware of any currently available sensor-only system that has demonstrated safety benefits that equal or exceed rearview video systems. For example, although radar systems have a longer detection range when compared to ultrasonic sensor systems, radar-based sensor systems exhibit similar tendencies to produce false positives as ultrasonic sensors (their ability to detect objects varies significantly based on the size, orientation, and composition of the object). Another example of an alternative sensor-only system is the Doppler radar systems suggested by Sense Technologies. While Doppler radar based systems can also detect at a greater range than ultrasonic sensors, the agency is not aware of any source of Doppler radar systems for automotive applications that presents a safety advantage over rearview video systems. To date, the agency is not aware of any OEM vehicle manufacturer that has elected to utilize Doppler radar systems on their vehicles. Further, the agency is aware of only one supplier that provides Doppler systems for automotive applications and it currently sells these systems for around $300 (an amount that exceeds the estimated costs of both rearview video and ultrasonic sensor-based systems).[88]

Further, the Doppler radar system presents various technical challenges that could also create safety concerns. First, the increased range of radar systems, including Doppler radar systems, can lead to an increase in false positives. Second, Doppler radar sensors rely on a change in relative speed in order for the object to be detected. This is a safety concern for the agency because this type of system would not warn the driver in a situation where a stationary pedestrian is located close to the bumper prior to the beginning of the backing maneuver. It will only warn the driver after the driver has begun accelerating into the pedestrian behind the vehicle. Given the short distance that can exist between the vehicle and the pedestrian, it is unlikely that the driver would be able to avoid a crash in these types of situations. Third, moving pedestrians can change direction and velocity. These changes in direction and velocity could affect the propensity of the Doppler radar to warn the driver as they can contribute to significant changes in relative speed (i.e., if the pedestrian is traveling at the same speed as the vehicle at one moment, but no longer doing so in the next moment, the warning may be inconsistent). These inconsistent warnings can also degrade the driver's ability to heed the warning and bring the vehicle to a stop before the crash. Finally, any potential sensor system must still address the fact that drivers tend not to react sufficiently to sensor warnings so as to avoid a crash—regardless of its ability to reliably detect pedestrians.

As in the case of the Doppler radars, the agency is not aware of any other types of currently available sensor-only systems that can address the backover safety concern better than rearview video systems. Sensor systems do not meet the need for motor vehicle safety in the types of backover crashes contemplated by Congress in the K.T. Safety Act not only because of the aforementioned technical limitations in the systems, but also because of the significant evidence that drivers do not react sufficiently to sensor warnings in order to avoid these crashes. While the agency's research focused mostly on ultrasonic sensor systems, the agency does not believe that any other type of sensor-based system would provide more benefits than rearview video systems.

Possible Future Developments Regarding the Rearview Image

The agency is aware of the development of potential technologies (such as automatic braking) which may address both the agency's concerns of accurate pedestrian detection and ensuring an appropriate and sufficient response to such detection without the necessity of providing an image of the area behind the vehicle. However, the available research at this time does not afford the agency sufficient information to develop performance requirements or assess the effectiveness of such systems to accurately detect pedestrians behind the vehicle and avoid a crash. During the course of this rulemaking, no commenter (on the ANPRM, on the NPRM, at the public hearing, or at the technical workshop) was able to provide information that would enable the agency to develop a minimum set of performance requirements capable of anticipating the design, benefits, and any associated safety risks of these new and future systems. Further, no commenter offered information regarding the ability of such systems to

[88] *See* Sense Technologies, *http://www.sensetech.com.*

more accurately detect pedestrians behind the vehicle when compared to the various sensor-based systems tested by the agency. While it may be possible that automatic braking or other future systems offer comparable or greater protection to the public without the use of a rearview image, the agency is not currently aware of any established, objective, and practicable way of testing such systems to ensure that they offer a minimum level of protection to the public.

Thus, the agency continues to believe that drivers of vehicles using technologies that do not afford some type of automatic intervention (e.g., automatic braking) need visual confirmation of the presence and nature of an unexpected obstacle in order to be motivated to take the steps necessary to avoid a backover crash. Rear visibility systems and the agency's performance requirements will need to address not only sensor system accuracy but also the aforementioned human factors findings (the ability of drivers to heed the sensor warning and take the appropriate action to avoid a backover crash) if they are to be effective in reducing backover crashes. If systems that can effectively and reliably avoid backover crashes without presenting the driver with an image of the area behind the vehicle become available in the future, it will then be feasible for the agency to evaluate their potential and use that information to consider whether any regulatory changes are desirable. While the agency shares the desire of a number of commenters for requirements that are technologically as neutral as possible, the agency emphasizes the statutory requirement to ensure that its performance requirements ''meet the need for motor vehicle safety.'' NHTSA believes that, under the current circumstances, the requirements in today's final rule are as technologically neutral as the agency can make them and still ensure that they ''meet the need for motor vehicle safety.'' We continue to believe that providing a driver with a view of the area behind the vehicle is currently the most effective way available to reduce backover crashes, as demanded by the K.T. Safety Act.

The Agency Continues To Encourage Future Research and Will Consider Future Rulemaking

NHTSA has made regulatory decisions within this rule based upon the best currently available scientific data and information. Consistent with its obligations under Executive Order (E.O.) 13563, Improving Regulation and Regulatory Review (Jan. 18, 2011), and E.O. 13610 on the retrospective review of regulations, NHTSA will review relevant new evidence and may propose revisions to the rule as necessary and appropriate to reflect the current state of the evidence and improve this regulatory program. NHTSA has already begun to obtain and review additional empirical evidence relevant to the real-world effectiveness of rearview video systems. NHTSA will gather and analyze additional data in this area—for example by monitoring trends in fatalities and injuries from backover crashes and additional information collections associated with other rulemakings or safety-related efforts. NHTSA also may consider additional collections of information that may trigger the Paperwork Reduction Act, and, would notify the public of these collections through the separate **Federal Register** Notices required under that Act. Further information collected by NHTSA could be used to inform future analyses. NHTSA may also identify and pursue additional issues for new research or conduct further research with regards to existing issues addressed in the rule.

Further, we note that the public (including industry) is able to petition NHTSA to modify the requirements of FMVSS No. 111 pursuant to the procedures established in 49 C.F.R. Part 552. Such modifications may be necessary in the future to accommodate new rear visibility system designs and the agency would consider these modifications in consultation with the public through the notice and comment rulemaking process. As we noted above, we encourage petitioners to provide data to demonstrate that new rear visibility systems can effectively address the backover safety problem by showing that these systems are not only able to accurately detect pedestrians behind the vehicle, but also induce drivers to react to avoid the crash. The agency would encourage petitioners to provide any relevant information regarding new potential systems that could be similar (but not limited to) the types of laboratory tests examined by the agency during this rulemaking process. We acknowledge that the research relevant for evaluating a new technology would vary depending on the type of technology considered. For example, an evaluation of an automatic braking system would ideally consider any relevant data on the system's ability to reliably detect a pedestrian behind the vehicle and apply the brakes. We further encourage petitioners to provide any relevant data or suggestions on how the agency could objectively test potential new systems. In summary, the agency will consider petitions for rulemaking to accommodate new systems designed to prevent backover crashes and the agency encourages petitioners to provide as much information as possible to enable the agency to effectively consider the petition.

Combination Systems Utilizing More Than One Countermeasure

Further, while we acknowledge the Consumers Union and the Automotive Occupant Restraints Council's comments encouraging the agency to examine combining sensors and rearview video systems, we decline to require any additional countermeasure technologies beyond a visual rear visibility system in today's final rule. As we noted in the ANPRM, our research seemed to indicate that drivers with multiple-technology rear visibility systems avoided unexpected obstacles less successfully than drivers equipped with video-only systems. While we requested comment on this counter-intuitive finding, the agency is currently not aware of any additional research that could help quantify any potential increase in safety benefit through requiring multiple countermeasure technologies. Accordingly, we do not believe that it is appropriate to require any additional rearview countermeasures at this time.

However, we note that today's final rule does not preclude manufacturers from utilizing sensors, mirrors, or other potential future technologies to augment the functionality of the rear visibility systems required by today's final rule. Technologies such as the cross-view mirrors suggested by Sense Technologies, thermal imaging systems suggested by Continental and BMW, the 3D Photonic Mixer Device suggested by IFM, and automatic brake intervention as suggested by the Automotive Occupant Restraints Council may be used by manufacturers to supplement the rear visibility systems installed to meet the requirements of today's final rule. However, as mentioned above, the agency currently does not have data to adequately assess the potential safety benefits of these additional systems. Conversely, the agency also does not wish to preclude the development of new potential rearview safety features which may reduce crash risk more effectively than those supplemental systems we have investigated. A system that successfully sensed a human behind the vehicle and automatically applied the brakes could be more effective than a system that provides an image and relies upon the driver to see

the image and respond in a timely manner.[89] However, the agency has not evaluated a production version of such a system to be able to accurately determine its possible benefits, disadvantages and costs. Thus, while today's final rule does not include any provisions that require the aforementioned technologies; it also does not preclude their application.

NCAP-Type Evaluation of Rear Visibility Systems

Additionally, MEMA and Delphi suggested that the agency encourage the development of new rearview technologies through an NCAP-type system. As we noted above, the agency has already updated NCAP to include rearview video systems. However, this recent update to NCAP did not change the program in the manner suggested by the commenters. The new update offers comparative information on vehicle models and their equipment levels (i.e., allows consumers to identify the models that have rearview video systems). However, it does not include comparative information assessing the different types of rear visibility systems relatively against each other.

As in our earlier discussion of alternative countermeasure technologies, we believe that additional research would be needed in order to develop the appropriate test procedures that can objectively evaluate and offer useful comparative consumer information on additional countermeasure technologies in the manner suggested by the commenters. While the agency does not preclude the possibility of developing such test procedures in the future, it is unable to implement such a program as a part of today's final rule.

Convex Side View Mirrors

Finally, we disagree with Ford and Brigade that today's rule should adopt the requirements in ECE R.46 for driver-side side view rearview mirrors. As we noted in the NPRM, the convex driver-side side view mirrors permitted by the ECE R.46 regulation do not enable the driver to detect pedestrians directly behind the vehicle, so they would not be able to cover the highest risk areas directly behind the vehicle. Thus, we did not propose a change to the driver-side side view mirror requirement in the NPRM nor do we adopt such a change today. We decline to amend FMVSS No. 111 to match the requirements of ECE R.46 in today's final rule.

d. Field of View

The NPRM proposed a field of view minimum requirement that covers 5 feet from either side of the vehicle center line to 20 feet longitudinally from the vehicle's rear bumper and a test procedure to ensure compliance as delineated by the seven test objects shown below in Figure 1. Commenters generally expressed concern in regards to three aspects of this proposal: (1) Whether the 20-foot by 10-foot field of view coverage area is appropriate, (2) whether the test procedure and test objects appropriately cover all the necessary areas behind the vehicle, and (3) whether or not visual overlays (such as guidance markers or controls) are considered when evaluating the field of view performance requirement. The following paragraphs will respond to these concerns in turn.

BILLING CODE 4910–59–P

[89] As described above, the agency continues to be interested in any relevant research that shows the effectiveness of such systems (e.g., in accurately detecting persons behind the vehicle) and an objective manner with which to test these potential new systems.

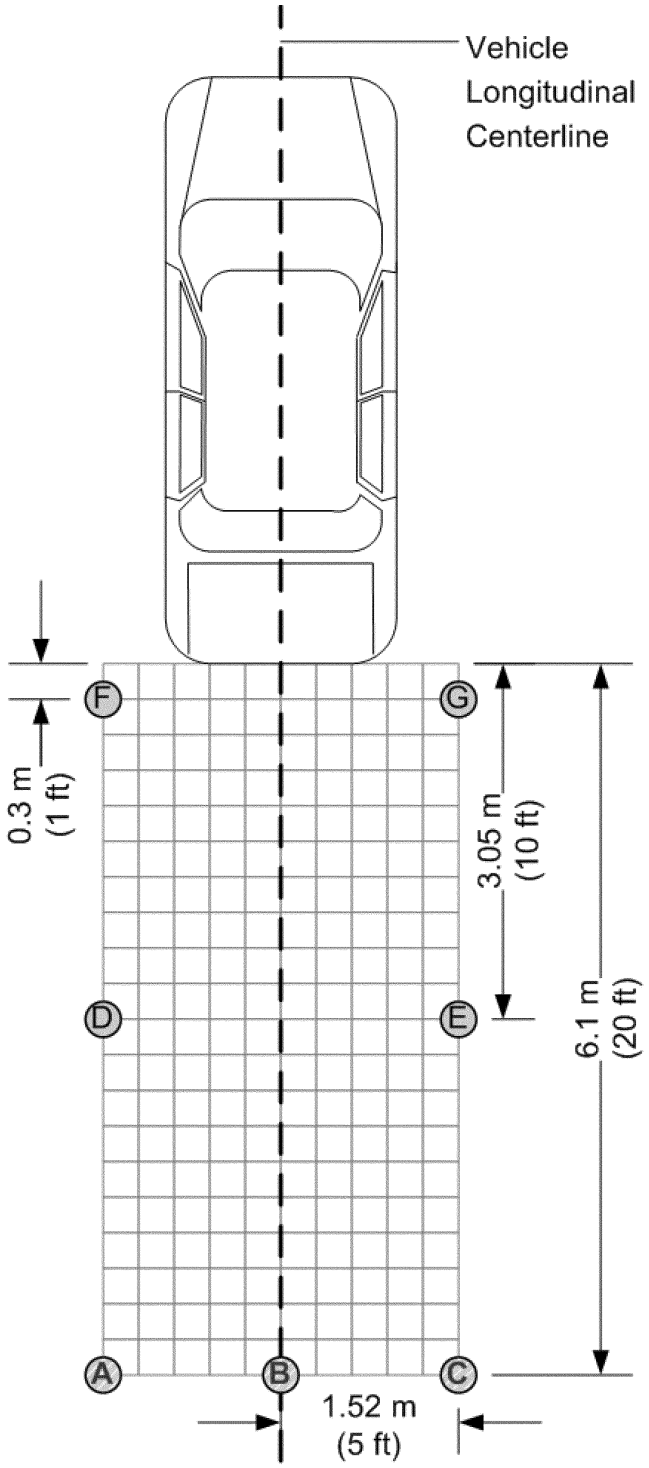

Figure 1. Countermeasure Performance Test Area Illustration and Required Test Object Locations (Units are meters)

BILLING CODE 4910–59–C

Coverage Area

In the ANPRM, the agency solicited comment on what areas behind the vehicle should be visible to the driver in order to best improve safety. In doing so, the agency tentatively suggested a 50-foot by 50-foot area coverage area as a possible option. In response to the lateral requirements, multiple organizations (such as Sony, the Advocates, and KidsAndCars.org) stressed the importance of covering the possibility that children may enter the area directly behind the vehicle from each side. In terms of longitudinal distance, advocacy groups such as the Advocates, KidsAndCars.org, and the Consumers Union recommended that any ''gaps'' between the rear coverage zone and the vehicle's rear bumper

should be eliminated. The Advocates further noted that there should be ''no reason why a rearview video system could not provide an optimal coverage area that . . . extends at least 20-feet behind the vehicle.'' However, other organizations such as the Automotive Occupant Restraints Council, General Motors, and Honda stated that a small gap (of approximately a foot or less) would be advantageous in lowering the costs of the system while still providing an adequate amount of protection.

After considering the comments on the ANPRM and the data from the SCI and Monte Carlo simulation research, the agency proposed in the NPRM a minimum field of view that covers 5 feet from either side of the vehicle centerline over an area extending 20 feet behind the vehicle's rear bumper. In regard to the lateral coverage area, we noted in the NPRM that while the Monte Carlo simulation data shows that there is at least a small level of crash risk as far as 9 feet laterally to each side from the vehicle centerline, the vast majority of the crash risk is encompassed within an area extending 5 feet laterally from the vehicle centerline. We further noted that while the Monte Carlo simulation data shows that some level of crash risk extends as far as 33 feet longitudinally from the rear vehicle bumper, the actual SCI case data show that 77 percent of the backover crashes would have been covered by a 20-foot longitudinal field of view.[90] Thus, in considering the available data, the agency proposed a 20-foot by 10-foot minimum field of view coverage area in the NPRM and proposed to test this coverage area using seven test objects placed along the perimeter of the 20-foot by 10-foot zone.

Comments

In response to the NPRM's proposed minimum field of view, the commenters raised various concerns. First, the Advocates expressed concern that manufacturers are not required to cover the area between the test objects. They stated that it could be possible for two cameras to be used to display all the required test objects but create a large blind zone in the areas between the test objects. Second, KidsAndCars.org stated in its comments that a 180-degree (horizontal angle) camera would offer the most protection as it would help the driver detect children that enter the path of the moving vehicle from the side. Sony similarly advocated for a more stringent field of view requirement that induces manufacturers to use 180-degree cameras. Sony stated that this would help cover lateral intrusions and that using 180-degree cameras would not create a significant increase in cost.

Third, General Motors, Volkswagen, and the Alliance suggested in their comments that the required field of view should not be wider than the width of the vehicle because the outboard targets will be visible in the rear view mirrors and because this penalizes smaller vehicles. Fourth, Sense Technologies questioned whether using a minimum field of view requirement is appropriate as it is prejudicial towards technologies that do not present the rearview in the form of an image and does not offer the same coverage as its product of persons/objects entering into the path of the backing vehicle from the side. Finally, the IIHS commented that the 20-foot longitudinal field of view coverage is inconsistent with the Monte Carlo research data because the data in the ANPRM does not show a clear inflection point at 20 feet and that there is a 0.3 probability of a pedestrian being struck by a vehicle at up to 27 feet.

Agency Response

Today's final rule adopts the minimum field of view requirement proposed in the NPRM, which extends 20 feet longitudinally from the vehicle's rear bumper and 5 feet to either side of the vehicle centerline as delineated by the seven test objects. After considering all the comments received on the NPRM, we believe that the proposed field of view continues to be the most appropriate.

However, as the Advocates points out in its comments, it is conceivable that a manufacturer could comply with the proposed field of view requirement while still leaving a significant blind zone by using two cameras to cover only the test objects along the perimeter of required field of view. While it is unlikely that a manufacturer may utilize this configuration, we agree with the Advocates that this is a safety risk as such a configuration would likely create a blind zone where there is the highest risk for a backover crash. In order to address this concern, we have amended the definition of ''rearview image'' to require that the image be ''detected by means of a single source.'' We believe that this definition more accurately reflects the research and the discussion in this rulemaking which has continuously utilized only one camera when considering the rearview video system countermeasure option. We agree with the Advocates that this point was not made explicit in the proposed rule regulatory text and today's final rule adopts the aforementioned definition in order to avoid such confusion.

On the other hand, we do not agree with KidsAndCars.org and Sony that the agency should specify a 180-degree camera requirement or increase the field of view so as to induce a 180-degree camera requirement. As noted previously, a goal of this rulemaking has been to increase the required field of view available to drivers while affording manufacturers flexibility in selecting methods to achieve that field of view. Thus, we decline to specify a camera angle requirement as suggested by KidsAndCars.org.

We also decline to expand the required field of view in order to induce manufacturers to utilize 180-degree cameras as suggested by Sony. We believe that any modification to the required field of view should be based on the associated crash risks of the different areas behind the vehicle as opposed to the type of equipment we anticipate manufacturers will use to fulfill those requirements. While the agency acknowledges the concerns of Sony and KidsAndCars.org that pedestrians may enter the backing path of the vehicle from the left or right, the agency continues to believe that the 20-foot by 10-foot area covers the relevant areas behind the vehicle with the highest crash risk. In making this assessment, the agency examined both data from the SCI cases and from the Monte Carlo simulation.

While as many as 41 of the SCI cases involved the crash victims entering the backing path of the vehicle from the left or right sides, the data do not identify accurately the location, direction, and speed of the crash victim at the beginning of the backing maneuver because SCI cases are post-crash analyses of real world crashes. In these analyses, the agency is only able to reconstruct the events of the accidents using its best estimates based on the available information. Therefore, a more refined assessment of the crash risks associated with the areas to the left or right of the vehicle from which pedestrians may enter the path of the backing vehicle is not possible through the SCI case data.

However, through the Monte Carlo simulation, the agency has been able to assess the crash risks associated with the areas to the left and right of the backing vehicle. As mentioned previously, the Monte Carlo simulation assigns crash risks to 1-foot by 1-foot areas behind the backing vehicle based on the location of the pedestrian at the moment the vehicle begins its backing maneuver. In other words, the Monte Carlo simulation generates the

[90] 75 FR 76228.

probability that a pedestrian, positioned at a given location behind the vehicle at the beginning of the backing maneuver, would be struck by the backing vehicle. The Monte Carlo data show that the vast majority of the crash risk is encompassed within an area extending 5 feet laterally of the vehicle's longitudinal centerline. The agency believes that the data from the Monte Carlo simulation cover the lateral intrusion crash risk contemplated both by Sony and KidsAndCars.org because the Monte Carlo data show that pedestrians originating from locations beyond 5 feet laterally from the vehicle centerline at the beginning of the backing maneuver have a significantly reduced risk of being struck by the backing vehicle.

Absent any additional information regarding the crash risks associated with the areas beyond 5 feet laterally from the vehicle's longitudinal centerline, we believe that the 10-foot wide lateral specification for the field of view requirement in the NPRM is appropriate for today's final rule. In addition, while we acknowledge Sony's comment that the costs of implementing requirements for 180-degree cameras may be less than anticipated in the NPRM, we note that it did not provide any additional information that the agency could use to provide a more accurate estimate. Although the agency has attempted to better quantify the costs of the various technologies that can be used to fulfill the requirements of today's final rule, we are not aware of additional supportive information regarding the crash risks of the areas that would be encompassed by an expanded field of view. Thus, we decline to modify the field of view in today's final rule for the sole purpose of encouraging manufacturers to utilize a wider angle camera.

In addition, we do not agree with the IIHS that the available data do not support the establishment of the 20-foot longitudinal field of view requirement. In setting the longitudinal requirement for the field of view, the agency also examined both the SCI and Monte Carlo simulation data and established the 20-foot requirement based on these data. While the agency does not believe that the SCI cases can help assess lateral crash risk, the agency believes that the SCI case data are more useful in assessing the longitudinal crash risks associated with backover crashes. Unlike assessing the crash risks resulting from side incursions where the position and trajectory of the pedestrian at the beginning of the backing maneuver is crucial, the assessment of the longitudinal crash risk can be derived from the distance traveled by the backing vehicle before striking the pedestrian. Unlike the position of the pedestrian, the position of the vehicle and the distance it traveled can be accurately determined through SCI cases. Thus, the agency believes that the SCI case data are useful in determining the longitudinal crash risks behind a backing vehicle.

However, unlike in the evaluation of the lateral crash risks, the Monte Carlo simulation data do not afford the agency a clear inflection point where the agency could reasonably delineate a limit. In previous documents released by the agency, the data from the Monte Carlo simulation were truncated in order to simplify our presentation of the information. After the NPRM was published, we docketed [91] the raw data results from the Monte Carlo simulation. These data show a gradual decrease in crash risk as the distance increases from the rear of the vehicle. Thus, while the agency relied on the Monte Carlo simulation data to determine the lateral boundaries of the field of view requirement, the agency believes it is more appropriate to consider the SCI case data in conjunction with the Monte Carlo simulation data to determine the longitudinal boundaries for the field of view because the SCI case data do contain a clear inflection point where the agency can reasonably establish a limit.

We acknowledge the comment from IIHS that a crash risk probability of 0.3 exists beyond the 20-foot mark in the Monte Carlo simulation. However, we do not believe the agency can reasonably rely upon the data change from a probability of 0.3 to 0.2 to establish a standard because the raw data from the Monte Carlo simulation show a gradual decrease in crash risk as the distance from the rear of the vehicle increased. However, when the Monte Carlo simulation data is considered in conjunction with the SCI case data, we believe it is rational to conclude that the 20-foot longitudinal requirement will cover all the areas behind the vehicle that are associated with the highest crash risk.

For the purposes of delineating the longitudinal extent of the required field of view, the SCI backover case data show a clear drop in number of crashes where the impact of the crash victim occurred after the vehicle had traveled 20 feet. When considering these data along with the data from the Monte Carlo simulation that show a probability crash risk of approximately 0.3 at 20 feet from the vehicle bumper, the agency believes that it is rational to conclude that a longitudinal requirement of 20 feet will cover the relevant areas behind the vehicle associated with the highest crash risk. For those reasons, today's final rule adopts the proposed requirements from the NPRM which require a 20-foot by 10-foot field of view as delineated by seven test objects located along its perimeter.

We also do not agree with the Alliance's comment that the width of the test object placement should be proportional to the width of the vehicle, and we have maintained the test object locations at a width of 5 feet to the left and right of the longitudinal centerline of the vehicle for the purposes of today's final rule. As in our response to Sony's comment on increasing the required field of view, we note here that the data from the Monte Carlo simulation indicate that the vast majority of the crash risk is encompassed within an area extending 5 feet laterally from the vehicle centerline.[92] Further, we believe that a consistent field of view requirement does not significantly penalize narrower vehicles because we anticipate that similar equipment will be used to comply with today's final rule irrespective of vehicle width and there are no data to indicate that narrower or small vehicles are responsible for fewer instances of backover crashes (resulting in either fatalities or injures). Finally, as we are unaware of any potential safety or other benefit in altering the required field of view according to vehicle width, and we are conscious of the increased complexity of compliance that can result from certifying vehicles to different fields of view, we believe that it is appropriate to establish a single field of view requirement for all vehicles.

Finally, we do not agree with Sense Technologies that a field of view requirement is not appropriate for this rulemaking. While we understand the concern that, by requiring a view, certain types of backover countermeasures are not sufficient by themselves, our research to date shows that systems that afford drivers the ability to see the pedestrian behind the vehicle are the most successful at helping drivers avoid striking the pedestrian. While products like cross view mirrors can help increase a driver's left and right field of view, the research has shown that they do not

[91] Docket No. NHTSA–2010–0162–0220

[92] The Monte Carlo simulation analysis we described in previous sections of this document shows that most of the crash risk in areas behind the vehicle are between 5 feet left and right of the vehicle centerline (assuming a vehicle width of six feet). *See* Docket No. NHTSA–2010–0162–0220.

allow a driver to detect objects within the backing path of the vehicle. The relative merits of sensor and mirror systems were further explored earlier in this document as well as in the NPRM and ANPRM.

Test Objects

It has been the agency's position that test objects should be used to evaluate the field of view and that these test objects should be based on the height and width dimensions of a toddler. In the ANPRM, the agency suggested utilizing test object dimensions based on a 1-year-old toddler since 26 percent of victims in backover crashes were 1-year-old toddlers. Commenters on the ANPRM suggested that utilizing the average dimensions of an 18-month-old toddler may be a more appropriate representation of the data presented in the SCI cases. In the NPRM, the agency noted the small difference in average dimensions between the 1-year-old and 18-month-old toddlers [93] and agreed with the principle of basing the test object on the dimensions of the 18-month-old toddler. Thus, the NPRM proposed a cylindrical test object with a height of 32 inches and a diameter of 12 inches, consistent with an 18-month-old toddler.

The agency further proposed in the NPRM to demonstrate vehicles' compliance with the minimum field of view requirement by placing seven test objects (with the aforementioned dimensions) along the perimeter of the 20-foot by 10-foot minimum coverage area behind the vehicle. As the agency was conscious that it may not be feasible for certain vehicles to mount a rearview camera above 32 inches, we proposed to require the entire height and width of each test object be visible only for those test objects located 10 feet or farther from the rear bumper of the vehicle. However, for the remaining test objects F and G (located only 1 foot behind the rear bumper of the vehicle), we proposed that a width of 5.9 inches must be visible along any point on the test object. The agency reasoned that this criterion would result in a 5.9 inch square or larger portion of a child be visible. Since 5.9 inches corresponds to the average width of an 18-month-old toddler's head, the agency believed that this would give the driver sufficient information to result in visual recognition of a child.

For testing purposes, two different design patterns were proposed for the test objects. To aid in the assessment of whether or not the required 150 mm (5.9 inch) width of test objects F and G are visible, the NPRM proposed to place a 150 mm wide stripe, of a contrasting color, over the entire height of these two test objects. As discussed later in this document, the NPRM proposed that test objects A through E be marked with a horizontal band covering the uppermost 150 mm of the height of each test object in order to aid in the assessment of the required image size.

Comments

In response to the NPRM, the advocacy groups expressed a number of concerns with the proposed visibility requirements as they relate to the test objects. First, the Advocates were concerned that the requirement that only 5.9 inches of the width of the F and G test objects be visible could allow a blind zone to exist as high as 38 inches vertical from the ground next to the bumper and extend at a descending angle rearward as far as 9 feet into the required field of view. Second, the Advocates, KidsAndCars.org, and the Consumers Union commented that the final rule should eliminate the 1-foot (0.3-meter) gap between the rear bumper and test objects F and G. These organizations claimed that this gap creates a blind zone directly behind the bumper which has a high probability of backover crashes (according to the Monte Carlo simulation). Conversely, Magna commented that many current rearview video systems do cover the rear bumper surface and do not have a 0.3-meter gap behind the bumper even though the test objects may be 0.3 meters away from the bumper.

On the other hand, the manufacturers generally raised two issues in their comments regarding the proposed test procedure. First, the Alliance expressed concern that low-profile vehicles, such as an Audi R8, will not have a camera mounted high enough to capture all the test objects because the vehicle's height is below the height of the test objects. Volkswagen suggested NHTSA resolve this concern by establishing that the field of view be limited by the height of the mounting point of the camera. Second, by noting that the agency assumed in the NPRM that a 130-degree camera would be able to cover the required field of view, Porsche, the Alliance, Volkswagen, and BMW all expressed concern that the 130-degree camera will not be able to cover all of the required portions of each test object because test objects F and G are located beyond a 130-degree angle coverage from the vehicle centerline. These commenters expressed concern that the location of the F and G test objects will effectively require a wider angle camera. Conversely, Magna noted in its comments that a 130-degree camera can sufficiently cover the field of view when the mounting height and angle are taken into account. Thus, Magna asserted that there is no need to utilize a 180-degree camera as some commenters suggested.

Various commenters also noted that the visibility requirement for test objects F and G do not include height requirements. Global Automakers sought clarification in its comments as to where the 150 mm (5.9 inch) width will be measured on test objects F and G. Similarly, Delphi and MEMA requested that NHTSA clarify the specific portions of the F and G test objects that must be viewable (without making a specific recommendation). On the other hand, Sony's comments suggested a 150-mm by 150-mm requirement for the area that must be visible on the F and G test objects in order to address concerns regarding the lack of a vertical specification.

The agency also received comments on the visual composition of the test objects. The Alliance requested clarification on whether or not test objects F and G can be rotated in order to aim the 150-mm stripe towards the camera during the test. Honda further sought clarification as to whether the proposed rule required a 150-mm radius or circumference of the F and G test objects be visible. Delphi commented that the vertical stripe on test objects F and G does not clearly show the portions of the test object that must be viewable and instead suggested a pattern of 4-in. by 4-in. squares to be painted on the test objects. Additionally, MEMA sought clarification as to what a ''color that contrasts with both the rest of the test object and the test surface'' means in the test procedure under paragraph S14.1.3 describing the test object. Finally, Volkswagen recommended that all test objects be marked with the same pattern in order to simplify the test procedure.

Agency Response

After considering the aforementioned comments, we have concluded that the field of view test object requirements, as proposed in the NPRM, are most appropriate for today's final rule. We have considered the scenario described by the Advocates in which a camera is mounted so as to provide a view of only the top of test objects F and G, and then the full height of test objects D and E. We believe that such an arrangement is highly unlikely because the camera

[93] 75 FR 76222; CDC, Clinical Growth Charts. Birth to 36 months: Boys; Length-for-age and Weight-for-age percentiles. Published May 30, 2000 (modified 4/20/2001) CDC, Clinical Growth Charts. Birth to 36 months: Girls; Length-for-age and Weight-for-age percentiles. Published May 30, 2000 (modified 4/20/2001).

angle would be aimed primarily toward the sky. Such a rear visibility system would have a camera mounted intentionally to meet the bare minimum of our requirements, while offering no apparent benefit to the consumer or to the manufacturer. It seems unlikely that such a configuration would meet the vehicle manufacturer's customer expectations and does not apparently allow the manufacturer to avoid incurring any costs—making this situation unlikely in the real world.

In addition to this situation being highly unlikely, the agency believes that the proposed width-only requirements for test objects F and G are necessary because they enable the field of view requirements to apply to all different vehicle types and sizes. As we are conscious of the fact that vehicle size and rear configuration can vary widely between small low-speed vehicles, low riding sports cars, and buses up to a GVWR of 10,000 pounds, we have designed the field of view test object requirements to be applicable to all the aforementioned vehicle types. In order to preclude manufacturers from utilizing the unlikely camera arrangement described by the Advocates, this rule would need to require that manufacturers construct vehicles so as to enable the rear visibility system see a larger portion of the F and G test objects. As this would likely unnecessarily restrict vehicle design, we have concluded that the unlikelihood of a manufacturer electing to pursue the camera arrangement described by the Advocates does not warrant the additional costs associated with increasing the field of view requirements for the F and G test objects.

The agency also does not agree with the Consumers Union, the Advocates, and KidsAndCars.org that the placement of the F and G test objects, 0.3 meters from the vehicle's rear bumper, creates a blind zone that may create a significant safety risk. We note that the center axis of each of the test objects designated F and G is located 1.52 meters (5 feet) laterally from the vehicle longitudinal centerline and 0.3 meters rearward of the vehicle's rear bumper. Because the location specifications the test objects are defined according to each test object's center axis, the requirement that the rear visibility system cover a 150-mm width of test objects F and G (each with a diameter of 0.3 meters) will effectively require the field of view to cover a significant area inward of 0.3 meters behind the vehicle bumper (at a lateral distance of 1.52 meters from the vehicle's longitudinal centerline). The agency acknowledges that a rear visibility system meeting the above requirements many not cover the required 150-mm width of a test object with a center axis less than 0.3 meters rearward of the vehicle bumper at the lateral distance of 1.52 meters from the vehicle's longitudinal centerline. However, the agency is currently not aware of any vehicle, covered by today's final rule, which has a vehicle width which exceeds 1.52 meters on either side from the vehicle's longitudinal centerline. Accordingly, a child located in front of the F or G test objects, and outside of the required field of view, would not be struck by a reversing vehicle.

In order to be struck by a reversing vehicle, the child must move towards the vehicle centerline. As the child moves towards the vehicle centerline, the possible blind zone that can exist behind the bumper will be significantly smaller than 0.3 meters. Because blind zones will be significantly decreased for areas behind vehicles that are within the width of the vehicle, the agency does not believe that rear visibility systems which meet the requirements of today's final rule will be unable to view a 150-mm width of any test object located directly along the bumper of any vehicle covered by today's final rule. While today's final rule does not include test objects at locations directly along the vehicle bumper in order to accommodate the wide variety of vehicle sizes and designs covered by today's final rule, we believe the requirements in today's rule are a reasonable proxy for ensuring that test objects in those locations would be sufficiently visible to the driver through the required rear visibility system. Further, because the test objects utilized in today's rule are designed to simulate the height and width of an 18-month-old toddler, we do not believe that the locations for the F and G test objects 0.3 meters behind the vehicle rear bumper will create a significant safety risk.

Today's final rule also denies the Alliance's request that the agency afford additional accommodation for vehicles that have low-mounted rear visibility systems. Specifically, we do not agree with Volkswagen that rear cameras mounted at a lower height than the height of the test objects will be unable to cover all the required vertical portions of the field of view. As mentioned earlier, we designed the field of view requirements conscious of the fact that vehicle height can vary greatly and we are unaware of any camera that has a vertical angle limitation which would prevent it from easily being mounted at a pitch which covers the full height of test objects A through E. Separately, we also disagree with Porsche, the Alliance, Volkswagen, and BMW that a 130-degree camera is unable to cover the required horizontal portions of the field of view. We believe that the diagrams presented by the commenters regarding the inability of the 130-degree camera to cover test objects F and G (located 5 feet laterally from the vehicle center line and 1 foot longitudinally from the rear bumper) failed to consider the three-dimensional properties of a camera's viewing angles. As Magna commented, a 130-degree camera can readily cover the 150-mm width requirements of test objects F and G when mounting height and camera pitch is considered. We further note, that in testing conducted by the agency, the vast majority of vehicles were capable of meeting the field of view requirements as proposed in the NPRM.[94] Thus, today's final rule adopts those requirements from the NPRM.

Today's final rule also responds to the commenters' concern regarding the portions of test objects F and G that must be visible. We confirm, in today's notice, that the visibility requirements for those test objects are width-only (and do not include a vertical specification). As stated above, the 150-mm width represents the width of the average 18-month-old toddler's head. We continue to believe that if a horizontal width of 150 mm of the F and G test objects is visible through the rearview image, that a sufficient area of the average 18-month-old child will be visible to the driver such that a driver can visually recognize the child and avoid a crash. As noted above, we are cautious against increasing a vertical specification of the F and G test objects (as suggested by Sony) because we are conscious that the requirements of today's final rule must be flexible enough to accommodate a wide variety of vehicles and configurations. We also note that to require a vertical specification would increase the cost and complexity of the test procedure by requiring some level of vertical measurement of the F and G test objects. While horizontal measurement requirements are easily confirmed using the vertical stripe pattern adopted in today's final rule for test objects F and G, measuring the vertical distance along those test objects presents greater practical challenges. Thus, in the absence of a clear increase in potential safety benefit, we decline to include a vertical specification for the required view of the F and G test objects.

[94] *See* Docket No. NHTSA–2010–0162–0133, Vehicle Rearview Image Field of View and Image Quality Measurement.

In this document, we also seek to address and clarify the various commenters' concerns regarding the placement and orientation of the test objects. As Honda indicated in its comments, the proposed regulatory text in the NPRM did not clearly identify whether the 150-mm width requirement for test objects F and G would be measured along the circumference of the test object or would be measured in some other manner. We agree that this uncertainty should be clarified and have modified the regulatory text to indicate that the 150-mm width requirement will be measured along the circumference of test objects F and G. In a related matter, we acknowledge the Alliance's concern regarding whether or not test objects F and G can be rotated in order aim the 150-mm-vertical stripe towards the camera. We note that the requirements from the proposed rule (and adopted in today's final rule) merely requires that a 150-mm width of test objects F and G be visible and does not restrict the orientation of the vertical stripe on those test objects.

However, we do not agree with Delphi and Volkswagen regarding their recommendations on the visual patterns that should be used for the test objects. It seems that, as the 4-inch by 4-inch squares proposed by Delphi would not correspond easily to any of the requirements of today's final rule, it would not aid in the assessment of whether or not a given rear visibility system can meet the requirements in today's final rule. Further, we decline to adopt the same visual pattern for all test objects as recommended by Volkswagen because the different patterns are intended to aid in the assessment of different requirements. The horizontal stripe on test objects A, B, and C assists in evaluating compliance with the image size requirement whereas the vertical stripes on the F and G test objects assist in evaluating compliance with the field of view requirement. Accordingly, we adopt the visual patterns for all the test objects as proposed in the regulatory text in the NPRM in today's final rule.

Finally, we acknowledge MEMA's concern that the test procedure does not specify what constitutes a ''color that contrasts with both the rest of the cylinder and the test surface.'' However, similarly to the orientation of the F and G test objects, the requirements of today's final rule merely state that a 150-mm-wide portion of the test objects (along the circumference) must be visible and that test objects A, B, and C must be displayed at an average subtended angle of no less than 5 minutes of arc. Using a contrasting color band primarily assists in the accurate measurement of the test object image width using the photographic data. Therefore, any color may be used in order to determine the compliance of a given rear visibility system.

Overlays

In the ANPRM, NHTSA solicited comments regarding different methods of presenting information to drivers. Multiple commenters responded with information regarding the use of overlays as visual warnings or indicators to help assist drivers. In the NPRM, the agency chose not to propose any requirements regarding overlays, but acknowledged the potential benefit of using overlays in conjunction with sensor-based technologies to better assist the driver.

Comments

In their comments on the NPRM, the manufacturers were concerned that overlays will obscure the required view of the test objects during the field of view test procedure and cause their systems to be considered non-compliant. Commenters such as the Alliance suggested that overlays (such as guidelines, arrows, icons, controls) are generally helpful to drivers and that, in practice, they will not operate to obscure an entire child. Specifically, Global Automakers suggested that the agency account for overlays by extending the width-only, 150 mm requirements of test objects F and G to apply to test objects A through E as well. Additionally, Global Automakers was concerned that as certain overlays may react to driver input from the steering wheel, the overlays on the video screen may be in different positions depending on the position of the steering wheel. Thus, it suggested that the test condition should specify that the steering wheel should be in the straight ahead position during the test. Honda's comments also expressed support for specifying the position of the steering wheel in the test condition.

Agency Response

The agency agrees with the commenters that video image overlays may have potential to add safety-related features to rear visibility systems.[95] On the other hand, the agency is also conscious that such overlays have the potential to be applied to the rearview image in both safe and unsafe manners. Depending on their size, location, and orientation, overlays have the potential to create unsafe blind zones in the rearview image and to mask small obstacles, such as children. However, without further research, the agency is not currently aware of a practical method of regulating these aspects of the use of overlays. The agency currently is not aware of any data which would support threshold values for regulating the size, location, and orientation of overlays. Thus, today's final rule does not limit the use of overlays so long as the overlays do not violate any of the existing requirements established by today's final rule.

However, we note that overlays can be designed to appear automatically in the rearview image in locations which cover the required portions of the test objects. In such a situation (e.g. guidelines showing the backing path of a vehicle which pass through any of test objects A through E), the overlays would violate the field of view requirements of today's final rule. However, as discussed in the sections below, today's final rule allows manufacturers to design systems which permit drivers to modify the field of view so long as a field of view compliant with today's final rule is displayed, by default, at the beginning of each backing event. Therefore, overlays would not violate the requirements of today's final rule if manually activated by the driver or if they do not cover any of the required portions of the test objects when displayed automatically.

While today's final rule contains no specific provisions regulating overlays, we also decline to create special exclusions or accommodations for overlays as suggested by various commenters. Although we agree that overlays have the potential to add safety-related features to the rear visibility system, we do not agree with the Alliance and other commenters that suggest that overlays cannot operate in practice to obscure a child. Thus, we decline to amend the field of view requirements so as to disregard overlays or to apply the same 150 mm width-only requirement to all the test objects as suggested by Global Automakers. We note that while the F and G test objects have width-only requirements in order to accommodate the large degree of size variation that can exist in vehicles covered by today's final rule, there is no similar concern for the remaining test objects.

However, we acknowledge the Global Automakers' concern that on-screen overlays may react to driver use of the steering wheel and that the steering wheel position can affect a vehicle's compliance with the requirements of

[95] Several commenters stated that future rear visibility systems may be able to perform advanced functions such as object detection which could utilize overlays to warn drivers of pedestrians located behind the vehicle.

today's final rule. Like the non-interactive overlays above, the agency is currently unaware of a practicable method of separating safe applications of overlays from unsafe applications of overlays. Thus, today's final rule also does not establish any specific provisions regulating the use of overlays which react to steering wheel orientation.

However, in order to ensure test repeatability, the agency clarifies the steering wheel test condition by stating in the test procedure that the steering wheel will be placed in a position where the longitudinal centerline of all vehicle tires are parallel to the vehicle longitudinal centerline. This steering wheel position is meant to simulate the straight ahead steering wheel position suggested by Global Automakers. Using this test condition, overlays in the form of guidelines which show the backing path of the vehicle would be prohibited from covering the required portions of the test objects when the steering wheel is placed in the straight ahead position. We believe that this steering wheel position is appropriate because it is likely the position which most closely reflects the real world driving conditions experienced by drivers conducting a backing maneuver along a driveway connecting a place of residence to a street. While we acknowledge that not all backing maneuvers will be conducted along a straight path, we believe that straight ahead steering wheel position most appropriately approximates the likely steering wheel positions during a backing maneuver when compared to the other available steering wheel positions.

The agency agrees that overlays can be designed to enhance the safety features of the rear visibility system. While we have not made any special accommodations for overlays, we expect that most of the currently used overlays will comply (or can easily be adjusted to comply) with our current requirements. By establishing the steering wheel condition and clarifying how the requirements of today's rule apply to overlays, we do not expect that existing overlay designs will prevent rearview video systems from meeting the requirements of today's rule. However, the agency remains concerned that future overlay designs have potential to operate unsafely depending on their size, orientation, and placement in the rearview image. Although the agency is currently unaware of a practicable method of regulating these aspects of the overlays, we expect that manufacturers will design overlays conscious of the fact that the rear visibility system is required by the provisions of today's final rule for an important safety purpose. We note that our decision not to regulate overlays does not relieve manufacturers from designing their system overlays so as to afford their customers a reasonable ability to see the required field of view.

e. Image Size

Beginning with the ANPRM, the agency has consistently expressed the position that the display of the required rear visibility system should produce images of a sufficient size so as to enable a driver to discern that objects are present behind the vehicle. Through the ANPRM, NHTSA requested comment on potential solutions to this problem such as including requirements restricting image size, overall display size, display resolution, image distortion, or image minification. In response to the ANPRM, multiple commenters advocated for various overall display size requirements based on different methods of calculating what a person can reasonably see. For example, Ford suggested that a 2.4-inch screen would be sufficient based on the measurement technique of New South Wales' Technical Specification No. 149 and its experience regarding customer acceptance of screens of this size. Magna cited studies conducted by General Motors and the Virginia Tech Transportation Institute which indicated that screens of 3.5 inches or larger led to the highest rates of crash avoidance.

Rather than propose a minimum overall display size as commenters suggested, the NRPM proposed to regulate the image size as measured by the apparent size of test objects as displayed to the driver through the rear visibility system. In general, NHTSA is concerned with setting performance standards which directly address the safety concern while still affording manufacturers as much design flexibility as possible. Thus, the NPRM did not include a minimum overall display size as a driver's ability to perceive an object displayed is affected not only by the display size, but also by the display location within the vehicle. To avoid setting restrictions on both the size and the location of the display within vehicle, the NPRM proposed to adopt an image size requirement which regulates how large the displayed objects will appear to the driver.

Thus, the NPRM proposed that test objects A, B, and C, (the three test objects located 20 feet behind the rear vehicle bumper in the field of view test procedure) be displayed with sufficient size resulting in an average subtended visual angle of no less than 5 minutes of arc [96] when tested in accordance with the proposed test procedures.[97] Additionally, each of the individual test objects A, B, and C may not be displayed at a size resulting in a subtended visual angle of less than 3 minutes of arc. This proposed requirement was based on research originally published by Satoh, Yamanaka, Kondoh, Yamashita, Matsuzaki and Akisuzuki in 1983 which examined the relationship between an object's visual subtended angle, and the subject ability of a person to perceive that object. This study concluded that an object must subtend to at least 5 minutes of arc in order for a person to make judgments about the object.

The NPRM also noted that NHTSA had previously based regulatory requirements, in part, on the Satoh research. For example, the school bus mirror requirements contained in paragraph S9.4 of FMVSS No. 111 require that the worst-case test object (cylinder P) be displayed at a subtended angle of no less than 3 minutes of arc. The NPRM reasoned that a value less than 3 minutes of arc is appropriate for school bus mirrors because school bus drivers are specifically trained not only to operate commercial vehicles, but also to use the school bus-specific mirrors. Further, the cross-view mirrors required by paragraph S9.4 of FMVSS No. 111 are intended for use while the school bus is stationary—thus affording the driver as much time as necessary to assess the objects in the mirror. As the images presented in passenger vehicles are intended for average drivers during moving situations, the NPRM tentatively concluded that an image size requirement based on the 5 minutes of arc recommendation from the Satoh research would be the most appropriate to address the safety risk contemplated by Congress in the K.T. Safety Act.

[96] A minute of arc is a unit of angular measurement that is equal to one-sixtieth of a degree. The angle which an object or detail subtends at the point of observation; usually measured in minutes of arc. If the point of observation is the pupil of a person's eye, the angle is formed by two rays, one passing through the center of the pupil and touching the left edge of the observed object and the other passing though the center of the pupil and touching the right edge of the object.

[97] As discussed later in this document, a test procedure which takes a still photograph of the rearview image from the simulated eye point of the 50th percentile male driver was proposed in order to evaluate compliance of a rear visibility system with both the image size requirements discussed in this section and the field of view requirements discussed previously. The image size is then measured using an in-photo ruler as reference as detailed in the proposed regulatory text in the NPRM.

Comments

In response to the NPRM, the Advocates noted two concerns with the proposed requirements. First, the Advocates stated that the proposed requirements are not supported by the Satoh research as the proposed rule allows for an *average* of 5 minutes of arc over the three rearmost test objects instead of a minimum of 5 minutes arc for each test object that the Satoh research indicates would be the minimum necessary for a driver to perceive the displayed object. Second, the Advocates stated that the test procedure should take into account the different image sizes that may result from the different possible eye points of different drivers such as the 95th percentile male and the 5th percentile female.

Separately, MEMA noted in its comments that the 5 minutes of arc standard is based on a study that assumes drivers possess 20/20 vision. Since most states allow persons to obtain driver's licenses with 20/40 vision, MEMA suggested that the final rule should require greater image size. Supporting MEMA's concerns, Delphi added that the requirement should be amended to 10 minutes of arc.

Finally, Ms. Kathleen Hartman commented that the display location should be near the back window so that a driver is able to both look backwards and look at the display simultaneously. However, both Gentex and Brigade expressed an opinion against regulating the location of the rearview display. Gentex reasoned that, since drivers are accustomed to viewing the rearview mirror during and before backing maneuvers, the rule should not preclude manufacturers the option to place the rear visibility system's display in the rearview mirror that may increase the likelihood that drivers would utilize such a system.

Agency Response

The agency has considered all the comments presented and continues to believe that the requirements and test method proposed in the NPRM for image size are most appropriate for today's final rule. We do not agree with the Advocates that an image size requirement which requires an average of 5 minutes of arc is not supported by the Satoh research. The test method, proposed in the NPRM and adopted by today's final rule, utilizes a still image camera to take a photograph of the rearview display with an in-photo ruler as reference. The visual angle subtended by the test objects is then calculated using information derived from the in-photo ruler, the distance between the camera and the rearview image, and the formula provided in the regulatory text. As the Satoh research concluded that an object must subtend to at least 5 minutes of arc in order for a person to make judgments about the object, today's final rule requires that test objects A, B, and C be displayed at an average subtended angle of no less than 5 minutes of arc. In response to the Advocates' comment on the averaging method, the agency does not anticipate large differences in the actual apparent size of the three furthest objects, nor do we anticipate any individual test object having an actual apparent size significantly less than 5 minutes. Thus, we adopt in today's final rule the requirements and test method proposed in the NPRM as there is data to indicate that a minimum subtended angle of 5 minutes of arc would yield greater safety benefits than an average subtended angle of 5 minutes of arc.

Considering the Advocates' request to establish apparent image size requirements for both a 95th percentile male as well as a 5th percentile female, we conclude in today's final rule that such a requirement would increase compliance costs without any significant benefit to safety. The agency previously explored this issue by calculating a simple mirror and seat configuration. We found that the subtended angle calculation does not vary greatly with the driver's seated height. In the configuration calculated by the agency, with a mirror height of 31.5 inches above the driver's seat and a 24 inch nominal distance to the driver's eye, the difference between a 5th percentile female and a 95th percentile male apparent image size was only 0.03 minutes of arc for a nominal apparent image size of 5 minutes arc. As requiring manufacturers to certify compliance to varying driver seating positions would increase costs without providing any significant safety benefit, this final rule continues to use the single measurement location close to the 50th percentile male which is intended to best approximate the eye points of most drivers.

As the agency was conscious of the existence of both in-mirror and in-dash rearview displays, our intent in the NPRM was to afford manufacturers the flexibility to place the rearview display in a location that is most appropriate for use by their customers. This final rule continues to allow flexibility with regard to the location of the display. We note the comments from Gentex which reasoned that drivers are most accustomed to viewing the rearview mirror during and before backing maneuvers. We also note Ms. Hartman's request that the agency require a display located such that the driver must look rearward. While the agency is not currently aware of data that show that a rear-mounted display or in-mirror display is the most appropriate location for the rearview image, today's final rule does not restrict these configurations. Consistent with our current rearview mirror requirements, today's final rule will exclude head restraints as an obstruction to the rearview display in the test procedure. Through this limited exclusion, we acknowledge the possibility that manufacturers may wish to utilize rear-mounted displays. While we note the separate safety benefit that is afforded by the head restraints required in FMVSS No. 202 and 202a, we believe that a driver who is looking rearward will move in such a way as to avoid the head restraint as an obstacle in his or her view a rearview display.

Finally, the agency declines to raise the minimum requirement that objects subtend to an angle of 5 minutes of arc as suggested by MEMA and Delphi. While the agency acknowledges that states allow drivers that do not have 20/20 vision to operate motor vehicles, we also recognize that these furthest locations and apparent image sizes will increase as the vehicle moves closer to them. Further, as mentioned above, the agency is interested in ensuring that certain display locations (such as the rearview mirror) are not precluded as an option for compliance. As an increased image size requirement (such as the 10 minutes of arc suggested by Delphi) would require a significantly larger display (which can preclude a manufacturer from installing an in-mirror rear visibility system), we believe that such a requirement is unnecessarily design restrictive without yielding significant benefits to safety. Therefore, today's final rule adopts image size requirements which remain unchanged from those proposed in the NPRM.

f. Test Procedure

In the ANPRM, NHTSA suggested that the test procedure currently utilized in FMVSS No. 111 for evaluating compliance of school bus mirrors could be modified for the purposes of this rule. Such a procedure would set up a still photography camera such that its imaging sensor is located at the eye point of a 50th percentile male. A photograph would be taken of the test objects as they are presented in the rearview image via the rear visibility system display. This photograph would then be used to assess the compliance of the rear visibility system.

The NPRM tentatively concluded, as suggested in the ANPRM, that an adapted version of the school bus mirror test in FMVSS No. 111 would be appropriate for evaluating compliance with this rule. In order to develop an objective and repeatable test, the proposed test procedure established additional elements of the test such as an ambient light condition, vehicle load test conditions, a driver seating position, and a ''test reference point'' to determine the location of the still imaging sensor. This proposed test procedure was designed to evaluate compliance with not only the field of view requirements but also the image size requirements of the proposed rule. The proposed regulatory text in the NPRM specified the instructions on how to conduct the proposed test. However, the commenters on the NPRM had various concerns regarding the proposed test procedure.

Test Reference Point

In the NPRM, we proposed to establish a ''test reference point'' which would simulate the eye point (eye location) of a 50th percentile male. In the ANPRM, NHTSA requested comment as to the appropriateness of utilizing the eye point of the 50th percentile male as not only the test reference point for evaluating compliance of a rear visibility system, but also as a reference point for measuring a vehicle's rear visibility without an additional rear visibility system.[98] In response to the ANPRM, commenters offered a variety of suggestions. General Motors suggested this rule apply a requirement consistent with the rear visibility requirements already existing in FMVSS No. 111 and utilize the 95th percentile eye-ellipse during the test procedure. Similarly, Nissan recommended that the rule adopt the eye ellipse method from SAE Standard J941 (which was incorporated by FMVSS No. 104 and also FMVSS No. 111). Further, the Alliance recommended that the eye reference points for this rule be harmonized with the equivalent standards from ECE R.46. Separately, Sony and the Consumers Union suggested the agency include tests for the other scenarios such as the 5th percentile female or the 25th percentile female. However, Honda cautioned that including multiple eye reference points may unduly increase costs, especially for evaluating mirror-based countermeasures.

The NPRM tentatively concluded that a test reference point simulating the eye point of the 50th percentile male driver is the most appropriate for this rule. Using the anthropometric data from a NHTSA-sponsored study of the dimensions of 50th percentile male drivers seated with a 25-degree seat-back angle (''Anthropometry of Motor Vehicle Occupants'' [99]), the NPRM proposed specifications for the left and right infraorbitale (a point just below each eye), the head/neck joint center at which the head rotates about the spine, the location of the center of the eye in relation to the infraorbitale, and the point in the mid-sagittal plane (the vertical/longitudinal plane of symmetry of the human body) of the driver's body along which the forward-looking eye mid-point can be rotated. All of these specifications were given in relation to the hip location of a driver in the driver seating position (the H point). For a further discussion of these specifications, please reference the NPRM.[100]

Using these specifications, the NPRM proposed a test procedure whereby an initial forward-looking eye midpoint of the driver (M_f) is located 632 mm vertically above the H point and 96 mm aft of the H point. Further, the proposed procedure located the head/neck joint center (J) 100 mm rearward of the forward-looking eye midpoint and 588 mm vertically above the H point. A point of rotation (J_2) would then be determined by drawing an imaginary horizontal line between the forward-looking eye midpoint (M_f) and a point vertically above the head/neck joint center (J). Finally, the proposed test procedure would locate the test reference point (M_r) by rotating the forward-looking eye midpoint about the aforementioned point of rotation until the straight-line distance between test reference point and the center of the visual display reaches the shortest possible value. The locations of these points are visually represented in Figure 2.

BILLING CODE 4910–59–P

[98] In the ANPRM, the agency also considered whether or not this rulemaking should limit the application of the rearview countermeasure to vehicles with a blind zone larger than a certain threshold. In that situation, the measurement of the vehicle's rear blind zone size would have also required a ''test reference point'' to determine the applicability of the rule. Thus the ANPRM solicited comments on the test reference point for both contexts. While many of the comments to the ANPRM in regards to the test reference point were in the context of evaluating the rear blind zone threshold, these comments are relevant to the more narrow discussion regarding the appropriateness of the proposed test reference point for evaluating compliance of the rearview countermeasure itself.

[99] Schneider, L.W., Robbins, D.H., Pflüg, M.A. and Snyder, R.G. (1985). Anthropometry of Motor Vehicle Occupants; Volume 1—Procedures, Summary Findings and Appendices. National Highway Traffic Safety Administration, DOT 806 715.

[100] 75 FR 76232.

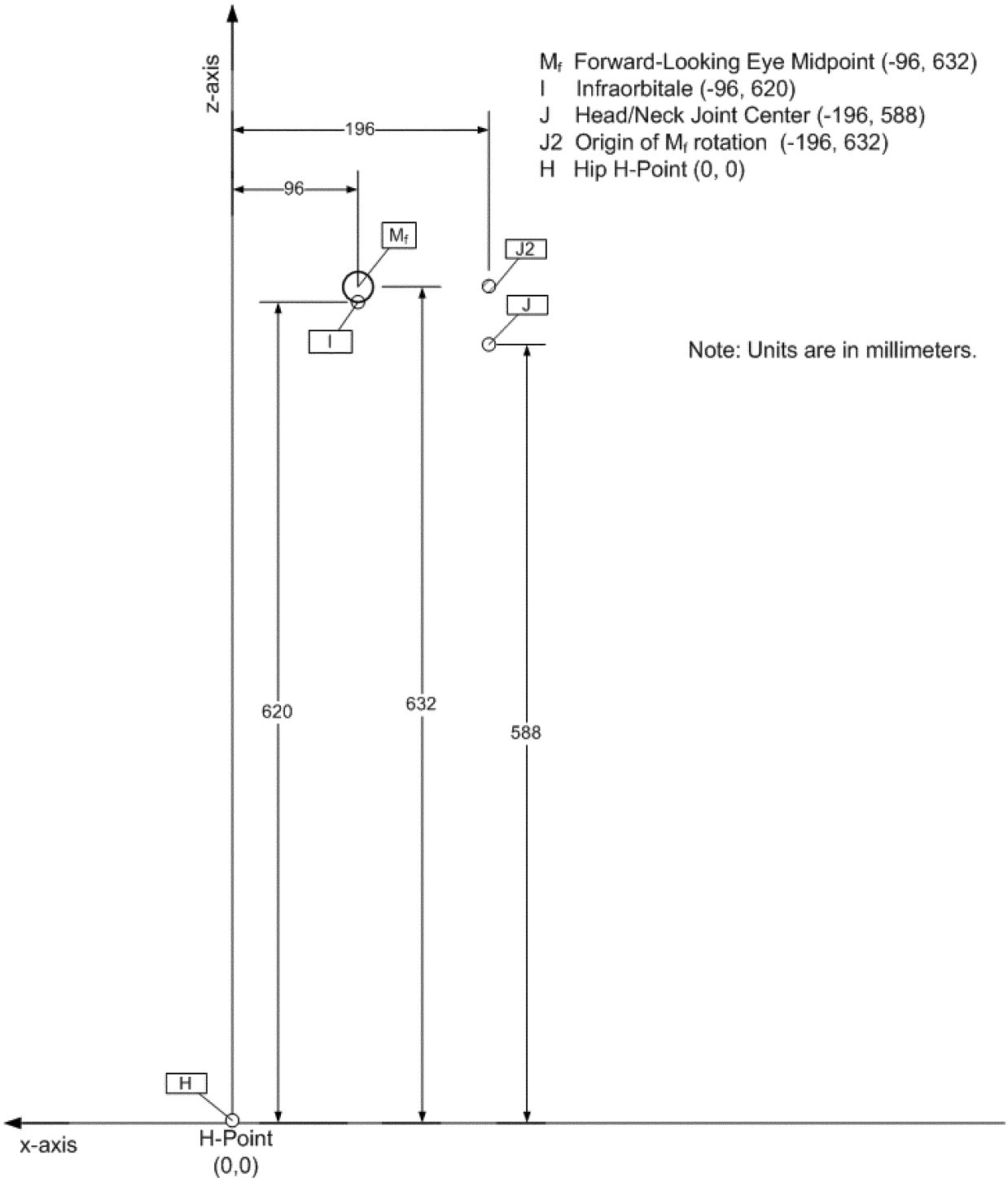

Figure 2. Coordinates of the Forward-Looking Eye Midpoint and Joint Center of Head/Neck Rotation of a 50th Percentile Male Driver with respect to the H point in the Sagittal Body Plane

BILLING CODE 4910–59–C

Comments

In response to the NPRM, the agency received comments requesting that the values proposed in the test procedure be harmonized with other test procedures already utilized in other FMVSSs. The Alliance noted that while the forward looking eye midpoint of the driver (M_f) is located 632 mm vertically above the H point in the proposed rule, FMVSS No. 104 references a horizontal plane 635 mm vertically above the H point. In order to increase consistency across the various standards, the Alliance requested that the final rule place the forward looking eye midpoint of the driver (M_f) 635 mm above the H point. Toyota's comments also expressed support for the Alliance comments on this issue.

Agency Response

After reviewing the comments from Toyota and the Alliance, we agree that the requirements of FMVSS No. 104 and

today's final rule should be harmonized. We note that, as the requirements for other regulated equipment in FMVSS No. 111 incorporate the eye point defined in FMVSS No. 104, utilizing the eye point from FMVSS No. 104 would have the effect of harmonizing the agency's test procedures across FMVSS No. 111. The 632 mm eye point referenced in the proposed rule was established using an eye point for the 50th percentile male driver. As previously noted in our discussion on image size, the agency has analyzed the sensitivity of moving the eye point for testing purposes. Our calculations found that the difference between a 5th percentile female and a 95th percentile male apparent image size was only 0.03 minutes of arc for a nominal apparent image size of 5 minutes arc. Based on that analysis, we believe that a 3 mm testing height modification from the requirements proposed in the NPRM does not have any significant impact on the test results. As such a modification would decrease the complexity of compliance with FMVSS No. 111 as a whole, we agree with the Alliance and Toyota that an eye height of 635 mm above the H point is most appropriate for today's final rule.

Measurement Procedure Camera Positioning

In the NPRM, we also proposed a measurement procedure which located a 35 mm or larger format still camera, video camera, or digital equivalent such that the center of the camera's image plane is located at point M_r (as defined above in our discussion of the test reference point). The test procedure further instructed that the camera lens be directed at the center of the visual display's rearview image.

Comments

Two concerns were raised during the technical workshop in regards to this procedure. First, the Alliance requested clarification as to what constitutes the image plane in the camera. Second, the Alliance also recommended that the agency set a test condition regarding the position and orientation of the rearview mirror during testing. Such a condition would ensure that when the camera lens is directed to the center of the visual display's rearview image, a rearview mirror mounted display would also be facing the camera in the test procedure.

Agency Response

In response to the Alliance's first concern regarding the image plane, we note that the image plane is the film or sensor location within the camera used pursuant to this test procedure. This clarification is consistent with the manner in which agency has conducted the test procedure for school bus mirrors in FMVSS No. 111. In response to the Alliance's second concern, we agree that for adjustable displays such as in-mirror displays, there may be various possible orientations which could affect the measurement of the image size and field of view through the camera used in the test procedure. Thus, we have clarified in the test procedure in today's final rule that an adjustable display will be adjusted such that it is normal to the vector established by points M_r and J_2 or as close to normal as the adjustment mechanism will permit if the range of adjustment will not allow the display to be positioned normal to the vector established by M_r and J_2. This additional specification will ensure that any adjustable rearview display will be oriented such that it is facing the camera used pursuant to this test procedure.

Driver Seating Position

In the ANPRM, we noted that the driver vertical seating position recommended by manufacturers for agency crash tests is generally at the lowest adjustable position. We requested comment on whether this adjustment position would be suitable for the 50th percentile male. In response, Nissan, General Motors, and the Alliance indicated that their comments on the ANPRM regarding the test reference position were also applicable in regards to driver seating position. Honda also reiterated its concern that a regulation accommodating varying driver sizes would increase costs, especially when applied to mirror-based countermeasures.

After considering these comments, the NPRM proposed a driver seating position which utilized the recommendation from the ANPRM that the driver seating position be adjusted to the lowest possible vertical setting. In order to add clarity, the NPRM also proposed to adjust the driver seat position to the midpoint along its longitudinal adjustment range. Finally, the NPRM also proposed that a three dimensional SAE J826 (rev. Jul 95) manikin be used to adjust the driver seat back angle to 25 degrees.

Comments

In its comments on the NPRM, the Alliance suggested that the Driver Seating Position condition in the proposed test procedure be harmonized with the test procedure in FMVSS No. 208. Specifically, the organization requested that the test procedure specify the seat back angle be adjusted to the ''nominal design riding position'' recommended by the manufacturer. It further recommended that the agency clarify that if no midpoint exists in the longitudinal adjustment range, the closest adjustment position to the rear of the midpoint should be used. These suggestions were supported by both Toyota and Volkswagen.

Agency Response

The agency has considered these comments on the driver seating position. However, we decline to adopt the nominal seating position test condition as proposed by the Alliance in today's final rule. Unlike in FMVSS No. 208, we believe it is necessary to specify the seating position in FMVSS No. 111 because these standards address different safety concerns. While FMVSS No. 208 regulates crash protection, FMVSS No. 111 regulates rear visibility. Unlike in FMVSS No. 208, minor variations in the seating position can significantly affect the eye point used to evaluate compliance with the requirements of today's final rule (particularly with respect to the possibility that certain interior features of vehicle cabin can become obstacles between the specified eye point in the test procedure and the rearview image). Because the seating position is an important condition which can significantly affect the test results, the agency does not believe it is appropriate to allow manufacturers to certify using a nominal seating position (defined by the manufacturers) in this rule. To evaluate compliance using the nominal seating position in this rule would introduce a variable into the test procedure which may affect the objectivity and repeatability of the test procedure. Thus, today's final rule does not adopt a nominal seating position test condition as requested by the commenter.

However, we agree with the Alliance that the regulatory text should clarify the longitudinal adjustment setting of the driver seat should no adjustment position exist at the exact longitudinal midpoint. We agree with the Alliance's recommendation that in this situation, the closest adjustment position to the rear of the longitudinal midpoint should be used. Thus, today's final rule adjusts the regulatory text accordingly in paragraph S14.1.2.5.1.

Lighting Conditions

In the ANPRM, NHTSA requested comment on possible lighting conditions that could be used during the test procedure. In response to the ANPRM, KidsAndCars.org and Rosco commented that the rear visibility

systems should be required to work during nighttime conditions. General Motors and Sony also offered different low-light ambient lighting conditions such as 3 and 5 lux but recommended that the vehicle's reverse lights be activated during the test. Finally, the Automotive Occupant Restraints Council recommended that the test condition specify a minimum and maximum ambient light condition that simulates daytime driving conditions. The NPRM tentatively agreed with the Automotive Occupant Restraints Council. We reasoned that since 95 percent of the SCI backover cases occurred during daytime conditions, conducting the compliance test in a worst-case nighttime condition may be an unnecessarily challenging requirement relative to real world conditions. Thus, we proposed in the NPRM an ambient lighting condition of 10,000 lux and proposed that the ambient lighting condition be measured at the center of exterior surface of the vehicle's roof.

Comments

In response to the NPRM, the Consumers Union, the Advocates, and KidsAndCars.org suggested the agency adopt lighting conditions that are intended to simulate nighttime conditions. KidsAndCars.org commented that in approximately 30% of backover incidents that they have reviewed, the backover incident occurred during nighttime lighting conditions. Thus, these organizations suggested that it is necessary to specify the test conditions to reflect low-light conditions.

On the other hand, Global Automakers commented that because the majority of backover incidents occur during daytime conditions which can vary from 10,000 lux to 100,000 lux, automakers should have the option of setting the ambient lighting conditions to above 10,000 lux during testing. Honda requested that the agency set a tolerance level in order to allow for consistent and repeatable testing. Separately, Global Automakers requested clarification in the technical workshop as to how the agency would measure the ambient lighting condition at the center of the exterior surface of the vehicle's roof if the vehicle is designed with a removable roof panel or convertible top.

Agency Response

While we acknowledge the concerns expressed by the advocacy groups regarding the performance of rear visibility systems under low light conditions, we do not specify (in today's final rule) low light test conditions which would establish minimum requirements for low light performance of rear visibility systems. As noted in the NPRM, the vast majority of the SCI cases reviewed by the agency occurred during daylight hours. Accordingly, the proposed rule in the NPRM did not include provisions regulating performance under night time or low-light testing conditions. While we acknowledge that approximately 30% of the cases reviewed by KidsAndCars.org occurred during night time hours, the data still demonstrate that a large majority of backover crashes occur during daylight hours. We also note that the agency currently requires backup lamps on all the vehicles covered by today's final rule. FMVSS No. 108 contains various minimum photometric intensity requirements depending on the angle in which measurement is taken. For the downward angles (angles pointing towards the ground), the minimum requirements can range between 30 candela and 160 candela. While we acknowledge that these lamps do not provide the same lighting conditions as normal daylight conditions, we believe that these lamps will augment the ability of rear visibility systems to successfully detect pedestrians behind the vehicle.

Finally, we note that the current test procedure has been designed for daytime conditions and might not be objective if it were performed under low light conditions because the view of each test object's visibility would be less clear. In other words, under low light conditions, the current test procedure does not offer a clear and objective method for distinguishing between rear visibility systems that can sufficiently display the required portions of the test objects (under low light conditions) from those that cannot. Without additional research, the agency is currently unaware of a test procedure that it can use to determine objectively the sufficiency of the view of the required portions of the test objects in low light conditions. Thus, we decline to adopt a low-light testing condition as requested by KidsAndCars.org in today's final rule.

However, even though the agency is unable to establish minimum low light performance standards for rear visibility systems in today's final rule, we expect that manufacturers will design their rear visibility systems so as to afford their customers the reasonable ability to utilize this important safety equipment under a variety of lighting conditions. In addition, the agency plans to monitor the rear visibility systems utilized to meet the requirements of today's final rule and will initiate additional rulemaking to establish minimum low light performance requirements for rear visibility systems should additional requirements become necessary in the future.

Separately, the agency declines to adopt the recommendations of Global Automakers and Honda to allow for a lighting tolerance above 10,000 lux. While we agree that lighting conditions under the sun can be as bright as 100,000 lux, such a testing condition would be impracticable to achieve in a lab testing environment. However, we do agree with the commenters that the lighting condition should allow the testing facility a level of tolerance. We believe this is appropriate in order to reduce the burden of requiring such precision in this test condition and do not believe that this change will have any practical impact of the results of the test. Thus, we have modified the regulatory text in today's final rule to allow for a range of lighting conditions between 7,000 lux and 10,000 lux in order to simulate dim daylight conditions which can be achieved in a test laboratory setting.

Finally, we acknowledge Global Automaker's inquiry regarding the measurement procedure for the ambient lighting for vehicles with removable roof panels or convertible tops. In response, we note that the ambient lighting test procedure would assume that such roof panels or convertible tops are in place so that the measurement of the ambient lighting condition can be measured from the center of the exterior surface of the vehicle's roof.

Other Vehicle Test Conditions

In addition to the test reference point, driver seating position, and lighting conditions, the NPRM also proposed other test conditions to ensure test repeatability. These conditions specified that the vehicle tires be inflated to the manufacturer's recommended cold inflation pressure, the fuel tank is full, and that vehicle is carrying the simulated weight of the driver and four passengers. The weight of each driver or passenger is simulated at 68 kg in the NPRM with 45 kg being loaded in the seat pan and 23 kg on the floorboard.

Comments

In its comments on the NPRM, the Alliance noted that the proposed vehicle loading test conditions in the proposed rule differed from the loading conditions for the other requirements in FMVSS No. 111. The Alliance recommended that, given the minimal impact that these loading conditions will have on the field of view

measurement, the loading requirements should be harmonized for both the rearview mirror and rearview camera tests at simply the average occupant weight of 68 kg. In addition, the Alliance requested clarity during the technical workshop in regards to how the vehicle would be loaded if there are more than 5 designated seating positions.

Separately, Honda expressed concern in its comments that no vehicle testing condition is specified in regards to the positioning of vehicle openings such as hatches and doors. As openings (such as hatches) may contain rearview cameras, Honda requested that the regulatory text specify that the hatches and doors of the vehicle are closed during the test procedure.

Agency Response

Considering the Alliance's comment concerning the occupant weight, the agency notes that the weight distribution may not be critical in many vehicle configurations. However, we are concerned that in some cases it may impact the vehicle's pitch in a way that alters the outcome of the visibility test. Unlike the mirror requirements of FMVSS No. 111, today's final rule does not require the rear visibility system to be adjustable in the horizontal and vertical direction, therefore the potential impacts of vehicle pitch because of weight is more critical than in the mirror provisions of FMVSS No. 111. Furthermore, the agency believes that splitting the weight about the seat and floor pan more accurately simulates an actual vehicle occupant. Accordingly, we decline to amend the vehicle loading requirements as requested by the Alliance.

However, we agree with the Alliance that the loading conditions proposed in the NPRM did not clearly state how the vehicle would be loaded if a vehicle has more than 5 designated seating positions. Thus, we have amended the regulatory text in today's final rule to specify that when a vehicle has more than 5 designated seating positions, the 68 kg weights simulating each of the five occupants shall be placed in the driver's designated seating position and any other available designated seating position in the vehicle.

We also acknowledge Honda's concern that the vehicle test condition does not specify that all the vehicle doors and hatches must be closed during the test. We agree with Honda that many rear visibility systems may have exterior components which collect the rearview image from a source mounted on a rear hatch or trunk lid. We further agree that opening or closing these trunk lids or rear hatches have the potential to affect test results for compliance purposes. Therefore, we are specifying in the test procedure in today's final rule that rear trunk lids and hatches are closed and latched in their normal vehicle operating state during the test.

Display Obstructions

In addition to the aforementioned concerns, Global Automakers and Honda expressed concern in their comments that certain vehicle interior design features may obscure the rearview display during testing.

Comments

Honda explained in its comments that they have designed rearview displays that are placed some distance behind a protective transparent cover. It requested clarification on how measurements of such images displayed in these screens would be accomplished. Also expressing this concern, Global Automakers commented that the test procedures specify these protective covers be removed during testing. Further, Global Automakers also requested clarification as to whether or not dashboard intrusions, which may partially obstruct the view of the display screen from the perspective of the testing view point, would affect the compliance of the view screen.

Agency Response

In order for today's final rule to be effective, it is necessary for the driver of the vehicle to see the required portions of the test objects in the rearview image. We define visibility based on a picture taken of the rearview image, at a defined point which approximates the eye point of a 50th percentile male driver, showing various test objects located behind the vehicle. If this view is obstructed by vehicle equipment (such as dashboard intrusions), the ability for the driver to detect objects behind the vehicle may be compromised. While we acknowledge that drivers are able to adjust their head position in order to accommodate certain small obstructions, this rule establishes at least a central location that is free of obstructions so that most drivers will be able to easily adjust their head (if needed) in order to see the entire rearview image. Thus, today's final rule makes no special accommodation for dashboard intrusions that obscure portions of the rearview image. The required portions of the test objects, as shown in the rearview image, must be visible to the driver from the eye point defined in the test procedure.

Finally, we acknowledge Honda's concern that certain rearview displays may be placed behind transparent covers that may affect the ability to affix a ruler to the rearview display as described the test procedure. Depending on the specific situation, we note that it may be necessary to remove the transparent cover or use an alternative method to obtain the measurement of the subtended angle. The agency believes that, as long as the measurement of the subtended angle is valid, accommodating rear visibility systems with transparent covers over the rearview display in the performance of the test will not alter the test results.

g. Linger Time, Deactivation, and Backing Event

As part of the agency's effort to ensure the rearview image presents the required field of view at the appropriate time, the agency has explored the possibility of restricting when the rearview image may be displayed. In the ANPRM, the agency noted that a maximum linger time (which discontinues the rear view display after a certain period of time) may be desirable in order to prevent driver distraction. However, the ANPRM also expressed our concern that some linger time may be desirable in certain instances where frequent interchange between reverse and forward directions are common (such as during trailer hitching or parallel parking). Thus, the agency tentatively suggested a linger time requirement of not less than 4 seconds but no greater than 8 seconds.

During the comment period for the ANPRM, commenters raised a variety of suggestions for an appropriate restriction on image linger time. Nissan suggested that there is little utility for extending the linger time greater than 200 milliseconds whereas General Motors suggested an image linger time of 10 seconds or a speed based limit of 5 mph. The Alliance, on the other hand, suggested 10 seconds or 20 kph (12.4 mph). Further, both General Motors and the Alliance commented that a maximum linger time would address the agency's concern and that it is not necessary to specify a minimum time. In considering these comments, the agency agreed that a maximum linger time would sufficiently address NHTSA's safety concern and that a minimum linger time requirement is not necessary. Accordingly, we noted the commenters' findings based on actual driving data and proposed in the NPRM a maximum linger time of 10 seconds.

In addition to the linger time requirement, we proposed in the NPRM a deactivation restriction. This

requirement was designed to ensure that the safety feature required by this rule would not be permanently or accidentally disabled. Thus, in addition to the maximum linger time requirement, the proposed regulatory text in the NPRM stated that the ''rearview image shall not be extinguishable by any driver-controlled means.''

Comments

Vehicle and equipment manufacturers expressed various concerns regarding these two proposed requirements. The first concern was expressed primarily by the vehicle manufacturers in regards to only the linger time requirement. In their comments, the vehicle manufacturers asked for flexibility in the manner in which they can approach the maximum linger time requirement. Similar to its comments on the ANPRM, the Alliance requested that manufacturers be afforded three linger time requirement options: (1) A time based option of 10–15 seconds, (2) speed based option of 5–10 mph, and forward travel distance based option of less than 10 meters. The organization contended that manufacturers need the ability to set the linger time that is appropriate for the consumer expectations for each specific type of vehicle. Other manufacturers also requested that the agency adopt variations of the Alliance recommendation. BMW suggested a 10 mph, 10 seconds, or 10 meters linger time requirement, whereas Mercedes-Benz requested a linger time of up to 15 seconds in order to accommodate its current system designs.

The second concern is expressed by both vehicle and equipment manufacturers with regard to both the proposed linger time and deactivation restrictions. In general, the commenters expressed concern that the deactivation and linger time restrictions could function to prohibit designs which include camera/video features other than the field of view required by this rule. For example, the Alliance and Sony suggested that the proposed rule could preclude manufacturers from offering certain additional views such as ''trailer tow zooming'' and ''top view'' displays. To address this, both recommended that the standard require the video display default to a FMVSS No. 111-compliant view, but afford the option to the driver of manually switching the view. Additionally, Global Automakers and Honda were concerned that the deactivation requirement could preclude driver controlled overlays on the screen. They contended that some of these elements need to be displayed concurrently with the rearview image in order to properly afford the driver the ability to adjust various aspects of the rearview display (such as screen brightness and contrast). Volkswagen also commented that the deactivation requirement would prohibit visual display screens that can be pushed back into a stow position that are not visible to the driver. Finally, Sony commented that the maximum linger time could preclude views such as a 360-degree view which drivers may wish to use while the vehicle is in motion to enhance situational awareness.

Separate from the aforementioned main concerns, the agency also received comments questioning the appropriateness of these requirements in this rule. First, Honda's comments suggested that the linger time should not be a requirement because the rearview image is no more distracting than a simple rearview mirror and further requested that any linger time requirement not affect the driver's use of other camera features. Sony expresses a similar concept stating that the linger time requirement does not advance the goals of this rulemaking because the requirement is focused on preventing driver distraction as opposed to increasing rear visibility. Additionally, Rosco contended that NHTSA should exclude commercial vehicles from the linger time requirement because those vehicles may utilize the camera for lane changing safety and other uses. And finally, Brigade expressed agreement in its comments with NHTSA's analysis that a minimum linger time would not be necessary as it would restrict designs that would alter the view displayed after the vehicle direction selector is shifted away from reverse.

Agency Response

After reviewing the comments, we agree with the arguments advanced by many commenters regarding the need for increased flexibility to accommodate different vehicle designs and additional camera functions. The agency remains concerned that the rearview image may become a distraction to drivers during forward driving maneuvers and that drivers may permanently or accidentally deactivate the rearview safety feature. However, the agency does not intend to preclude this design flexibility in today's final rule and believes that the following revisions appropriately balance our safety concerns with the commenters' request for design flexibility.

Thus, today's final rule addresses the concerns of the aforementioned commenters through establishing a ''backing event'' that would serve as the reference for the maximum linger time and deactivation requirements. Today's final rule includes an additional definition which defines a backing event as ''an amount of time which starts when the vehicle's direction selector is placed in reverse, and ends at the manufacture's choosing, when the vehicle forward motion reaches either; (a) a speed of 10 mph, (b) a distance of 10 meters traveled, or (c) a continuous duration of 10 seconds.'' In light of this new definition, today's final rule requires that within 2.0 seconds of the beginning of each backing event, a rearview image compliant with today's final rule must be displayed and that rearview image must not be displayed beyond the end of the backing event. However, today's final rule permits manufacturers to design the vehicle to enable the driver to manually select a different view during the backing event so long as the default view presented to the driver at the beginning of each backing event is compliant with the requirements of today's rule.

Since the agency agrees with both the Alliance and BMW that the appropriate end of a backing event can vary depending on the type of maneuvers anticipated to be performed in each vehicle model, we have established a ''backing event'' definition in today's final rule which affords such flexibility. Further, the agency does not anticipate the additional flexibility included in today's final rule to have a discernible impact on safety. We agree with the parking example from BMW's comment that the optional 10-meter limit is reasonable based on the likelihood that when vehicles travel forward at a greater distance than 10 meters, the driver's intention to park in a given spot has concluded. Likewise, the agency believes that in situations such as a trailer hitching maneuver, a driver whose speed has increased to 10 mph will have concluded that maneuver and should no longer be presented with this rule's required rearview image. After one of these limits has been reached, the backing event is finished. Therefore, if the transmission is then shifted to reverse, a new backing event is initialized and the rearview image defined in this rule must then be displayed.[101]

[101] We note that the requirement to show the FMVSS No. 111-compliant field of view *at the beginning of each backing event* differs from the test procedures used to assess the performance criteria for rearview video systems for the purposes of NCAP. As explained in the NCAP final decision notice, we verify conformity with the NCAP field of view criterion by assessing the initial view shown by the system after an ignition cycle. We

Considering the comments on additional views, the agency does not intend to restrict currently available alternative views such as ''top view'' and ''trailer mode'' or other potential views that may be developed in the future. Additionally, the agency recognizes that screen adjustments such as brightness and contrast are consistent with the goal of affording the driver a clear view behind the vehicle and may reasonably be overlaid on top of the required rearview image as long as they are manually activated by the driver. However, the agency does believe that the field of view defined by this final rule is vital to ensuring that drivers are able to avoid the backover crashes contemplated by Congress in the K.T. Safety Act. To reasonably balance this safety concern while still affording the aforementioned flexibility of design, today's final rule does not restrict manufacturers from providing a driver-controlled means by which the rearview image defined in this rule can be altered, provided that the vehicle displays the required rearview image at the beginning of every backing event.

On the other hand, the agency does not agree with Sony and Honda that this rule should not provide restrictions against excessive linger time. We do not agree that the rearview image display is no more distracting than a rearview mirror as an illuminated display has fundamentally different properties when compared to a mirror. For instance, the prolonged illumination of the required image at night would be particularly distracting when the vehicle is traveling forward. Furthermore, unlike mirrors required on passenger cars and trucks, the required field of view coverage under this rule does not provide useful information for the driver while the vehicle is moving forward. We also do not agree that driver distraction is not a proper concern of this rulemaking. As in every rule, NHTSA desires to be cautious and avoid situations that can potentially increase safety risks.

Finally, today's final rule also does not include an exclusion from the linger time requirement for commercial vehicles as requested by Rosco. Rosco requested this additional flexibility as it could be advantageous for certain vehicles such as small school buses, airport shuttles, or local delivery vehicles to constantly monitor the rear of the vehicle. While the rearview image defined in this final rule has been designed to enable a driver to detect pedestrians such as small children directly behind the vehicle during backing maneuvers, we have not evaluated the safety implications of using this rearview image in high speed forward moving situations as it was not part of the safety problem today's rule is designed to address. Further, as stated above, the agency desires to be very cautious not to increase safety risk by allowing this novel application of the rearview safety equipment. Therefore, today's final rule does not include any exclusion that would allow commercial vehicles to continue to display the required image after the end of a backing event.

h. Image Response Time

The agency has expressed concern that if the rear visibility system does not display the required field of view promptly, the safety benefit of this system will be reduced because drivers may begin backing maneuvers before the field of view is displayed. Thus, in both the ANPRM and NPRM, the agency has explored a response time requirement that would limit the amount of time that can pass between driver's selection of the reverse gear and the video screen display of the required field of view. The ANPRM requested comment on a possible resolution to this issue by suggesting a preliminary maximum response time of 1.25 seconds. After considering the comments on the ANPRM, the agency proposed a 2.0 second response time requirement in the NPRM.

In proposing the 2.0 second requirement, the agency cited two technological limitations that necessitated a longer maximum response time. First, the agency took note that both GM and Gentex indicated a need for additional tolerances for their systems to produce the required image in part because their systems conduct image quality control checks before displaying the image. Both manufacturers stated in their comments that a required image response time of 1.25 may adversely affect the image quality displayed.

Second, the agency noted that liquid crystal displays (LCDs) require time to warm-up before they can display an image and that this time may vary depending on the location of the visual display. The agency acknowledged that in-mirror displays (which are only activated when the reverse gear is selected) may require additional warm-up time when compared to in-dash displays (which may be already in use for other purposes such as route navigation). For these reasons, the proposed rule in the NPRM extended the image response time requirement. As the agency was not aware of any rationale that justified extending the response time requirement beyond 2.0 seconds, the agency stated that a 2.0 second response time would be appropriate.

Separately, the NPRM took note of the comments from the Advocates which recommended that vehicles be equipped with an interlock feature which would prevent the vehicle from reversing until the rear visibility system has fully initialized. The Advocates contended that this feature would ensure that drivers have the required field of view available when the driver commences the backing maneuver. In response to the Advocates' comment, NHTSA expressed concern that such a feature may cause annoyance with drivers. While we did not propose an interlock requirement in the NPRM, we requested comment on the merits of such a feature.

Comments

Generally, the advocacy groups have commented that the response time should be reduced. These groups share the agency's concern that if drivers are not quickly presented with the required field of view, they may begin their backing maneuvers without waiting for the rear view display. Therefore, the Advocates stated that the standard should require a 1.0 second maximum response time and require an interlock feature for vehicles that do not meet the 1.0 second requirement. Similarly, the Consumers Union suggested the agency adopt the 2.0 second requirement or a shorter technologically feasible response time and that we grant no allowance for system initialization. The Consumers Union noted that image response time can be significantly longer when the vehicle is first initializing.

Conversely, the manufacturers were generally concerned that the 2.0 second response time requirement proposed in the NPRM is too stringent when

made this decision in NCAP because we believed that prior to today's final rule (and during this rule's phase-in period) consumers would benefit from information on rearview video systems being listed as a ''Recommended Advanced Technology Feature'' even if these systems did not show the default view at the beginning each backing event. On balance, we believed that consumers would realize many benefits from systems that at least show the relevant field of view at the beginning of each ignition cycle and NCAP should recommend those systems to consumers. However, in light of the decision in today's final rule to accommodate manufacturers' prior system designs during the phase-in period (by delaying implementation of the performance requirements beyond the field of view), we believe it is appropriate for the long-term performance requirements to require the default view (that is compliant with FMVSS No. 111) at the beginning of each backing event. By using these slightly different approaches in NCAP and in today's final rule, we believe that the agency can maximize the value of information given to consumers in the short-term and the safety benefits of rear visibility systems in the long-term.

considered with the system initialization process. Global Automakers suggested that the 2.0 second response time is inappropriate for situations where the vehicle is shifted into reverse immediately after starting the engine. They contended that this is an abnormally quick process compared to real world conditions and recommended that the agency establish a test procedure where the vehicle is running for at least 10 seconds before shifting the vehicle into reverse and measuring the 2.0 second response time. Using similar reasoning, the Alliance and Volkswagen proposed a 3.0 second response time requirement when tested within 4–20 seconds of opening the driver side door. The Alliance and Mercedes-Benz also stated that this change is necessary in order to accommodate existing rear view systems, which have not been designed to meet the 2.0 second response time requirement. They cautioned that requiring the manufacturers to change these designs apart from the normal product cycle would significantly increase costs. On the other hand, Honda did not request any change to the response time requirement because their newer systems will be redesigned to meet the proposed requirement. Thus, they requested that the image response time requirement be delayed until the end of the phase-in period.

The equipment manufacturers generally stated in their comments that their products will be able to meet the proposed 2.0 second response time requirement. Magna stated that the proposed requirement in the NPRM ''appears to be both technically and practically achievable.'' However, Panasonic echoed the manufacturers' concerns by asking the agency to consider the initialization process, ambient conditions, and the drop in voltage experienced during engine crank start. On the other hand, Brigade cautioned that drivers may not wait for a delayed image and requested a 1.0 second response time requirement. Finally, Magna noted that the research conducted by this agency seems to indicate that drivers with video displays may wait for the display to appear before commencing the backing maneuver.

Additionally, the manufacturers and one supplier requested that the test condition for image response time specify an ambient room temperature in order to accommodate for response time variation due to temperature. Magna requested that the test condition for response time be set to 20 degrees Celsius +/− 5 degrees Celsius. On the other hand, Volkswagen and the Alliance recommended that the test condition be set to a temperature of 70 +/− 10 degrees Fahrenheit. During the technical workshop, the Alliance also recommended that the agency specify a test condition for the gear position for manual vehicles which could be initiated with the transmission in the reverse position.

Finally, in response to our request for comment on the merits of interlocks in the NPRM, Magna commented that drivers would view an interlock feature, which removes direct and immediate control from the driver, with ill-regard. The company stated that drivers often may need to reverse a vehicle quickly at a red light-controlled intersection in order to avoid being struck by a reversing vehicle in front which has unintentionally intruded into the intersection. The Alliance raised similar arguments by raising the concern that drivers may need to reverse quickly when conducting three-point turns in traffic. Further, the Alliance stated it is unaware of any practical methods of incorporating such an interlock into a vehicle without creating a danger of sudden acceleration as such a feature would create a disconnect between the driver's command and the vehicle response.

NCAP Request for Comments and Final Decision Notice

The agency also examined this particular issue in the context of updating NCAP to include rearview video systems. In the NCAP request for comments, the agency stated (in order to address the aforementioned concerns from manufacturers regarding the state of the vehicle prior to testing) its plan to use a vehicle conditioning procedure prior to assessing the NCAP image response time criterion. The procedure announced in the NCAP request for comments was as follows:

Image response time test procedure. The temperature inside the vehicle during this test is any temperature between 15 °C and 25 °C. Immediately prior to commencing the actions listed in subparagraphs (a)–(c) of this paragraph, all components of the rearview video system are in a powered off state. Then:

(a) Open the driver's door,

(b) activate the starting system using the key,[102] and

(c) place the vehicle in reverse at any time not less than 4 seconds after the driver's door is opened.

[102] We stated in our NCAP request for comments that the terms ''starting system'' and ''key'' have the same meanings that these terms have in FMVSS No. 114, *Theft protection and rollaway prevention. See* 49 CFR Part 571.114.

We intended this procedure to establish not only the state of the vehicle's rear visibility systems prior to testing, but also to establish the temperature conditions during the test. We believed that this procedure established an appropriate balance between ensuring that the view of the area behind the vehicle associated with the highest crash risk is available to the driver in a timely fashion and affording the vehicle manufacturers all reasonable design flexibility. We reasoned that a vehicle conditioning procedure lasting no less than 4.0 seconds would be appropriate because our naturalistic driving data [103] indicate that approximately 90% of drivers do not select the reverse gear to begin the backing maneuver less than 4.25 seconds after opening the vehicle's door.[104] In other words, only approximately 10% of the time drivers enter their vehicle and select the reverse gear in less than 4.25 seconds. Thus, we believed that a vehicle conditioning procedure that could test a vehicle in as little as 4.0 seconds after the beginning of the procedure would most closely mimic the vast majority of real world conditions.

In response to our NCAP request for comments, various manufacturers stated

[103] These data are information NHTSA prepared in support of the research report titled ''On-Road Study of Drivers' Use of Rearview Video Systems.'' *See* Mazzae, E. N., et al. (2008). On-Road Study of Drivers' Use of Rearview Video Systems (ORSDURVS), *supra.* A summary of these naturalistic driving data prepared for that study (as it pertains to the length of time drivers take to select the reverse gear) is available in Docket No. NHTSA–2010–0162–0227.

[104] The naturalistic driving data indicate that 90% of drivers did not select the reverse gear less than 4.25 seconds after the system began collecting data. The systems used in this study may have initialized as a result of triggers which can include the door opening, the door unlocking, or using the key fob. While the agency acknowledges that the system may have begun recording data before the door was opened, we continue to believe that approximately 90% of drivers did not select the reverse gear in less than 4.25 seconds. The agency believes that the time difference resulting from the different triggers would only affect the test results for drivers who took around 4.25 seconds to select the reverse gear because drivers taking significantly longer than 4.25 seconds to select the reverse gear most likely would not have selected the reverse gear in less than 4.25 seconds even if the system began recording data upon unlocking the vehicle door or using the key fob. The agency further believes that, for drivers that take around 4.25 seconds to select the reverse gear, the data recording must have been initialized while the driver was very close to opening the vehicle door in order for the driver to complete all the tasks required in order to start the vehicle engine and select the reverse gear in around 4.25 seconds. Thus, while the data from the naturalistic study indicate that 90% of drivers selected the reverse gear not less than 4.25 seconds after the system began recording data and not after the driver opened the door, we continue to believe that approximately 90% of drivers selected the reverse gear not less than 4.25 seconds after opening the door.

a need for a maximum vehicle conditioning procedure time. They explained that vehicles are often designed to power down their electronic systems after a certain amount of time has elapsed. For example, GM recommended a maximum procedure time of 60 seconds and Ford recommended a maximum time of 5 seconds. We agreed in our NCAP final decision notice with the commenters that the vehicle conditioning procedure should have a maximum time limit. We therefore established a maximum test procedure time of 6.0 seconds. When we designed the vehicle conditioning procedure, we intended to test the system as closely to 4.0 seconds as possible to mimic real world driving conditions. Thus, in order to establish a practical test that clearly defined the conditions under which the system would be tested, we stated that the rearview video systems in NCAP would be assessed after the vehicle was conditioned according to the conditioning procedure that lasted between 4.0 to 6.0 seconds.[105]

Agency Response

We share the advocacy groups' concerns that drivers may begin their backing maneuvers without the benefit of the rear visibility system if they are not presented with the rearview image quickly enough. As we discussed in our analysis of SCI cases involving rearview video systems, the 2013 case involving a BMW X5 demonstrated the importance of having a response time requirement that is as stringent as technologically feasible. If the response time of vehicle's rear visibility system had been longer in that case, it is possible that the injuries to the pedestrian would have been more severe.

However, we are unable to reduce the response time below 2.0 seconds in today's final rule for a variety of reasons. First, we believe that to reduce the response time requirement below 2.0 seconds would unnecessarily restrict potentially safety-beneficial alternatives. When we consider both in-dash and in-mirror displays, we believe the current state of technology does not seem to be able to consistently achieve a response time of less than 2.0 seconds. Because in-mirror displays are generally not designed to be used for other purposes such as navigation or infotainment applications, in-mirror displays generally are only powered when the rearview image is required. Using currently available technology, it does not seem feasible for these displays to power up and display the required field of view in less than 2.0 seconds. However, as the agency is aware of the possibility that in-mirror displays may be a more natural location for certain drivers or vehicle types and such systems may have a shorter initialization time than in-dash displays, we believe it is not in the interests of safety to establish a response time requirement which would preclude this type of display.

Second, the data show that approximately 95% of drivers do not begin backing the vehicle until at least 1.0 second has elapsed after the vehicle has been placed into reverse.[106] Thus, for the vast majority of drivers, the rearview image will be available in less than one second after the driver is ready to begin the backing the vehicle. As the naturalistic driving data available to the agency currently reflect the behavior of drivers that are accustomed to backing without the assistance of the rear visibility system or viewing the rear visibility system as a convenience feature rather than a safety feature, the agency believes that it is reasonable to anticipate that, through further incorporation and driver education regarding rear visibility systems, drivers will become accustomed to waiting an additional (less than) 1.0 second for the rearview image to appear. While we encourage manufacturers to drive the rear visibility system image response time to a minimum, as well as to educate their customers regarding the proper use of this important safety feature, to require a response time below 2.0 seconds would unnecessarily restrict rear visibility systems from using in-mirror displays. Therefore, after considering all of these factors, today's final rule adopts the proposed requirement from the NPRM which requires that the rearview image be displayed within 2.0 seconds[107] of the start of a backing event.[108]

However, in regard to initialization time, the agency recognizes that for compliance testing purposes it is important to establish the state of the vehicle prior to the transmission being shifted into reverse. We acknowledge the difficulties noted by the manufacturers that the system initialization process may impede the ability of the rear visibility system to display the required rearview image within 2.0 seconds. We further note the aforementioned naturalistic driving data that indicate that approximately 90% of drivers do not select the reverse gear to begin the backing maneuver less than 4.25 seconds after opening the vehicle's door. Thus, we believe that the NPRM, which would have required the 2.0 second response time regardless of vehicle state, did not fully account for real world driving situations that provide time for the vehicle's rear visibility system to initialize.

However, we decline to adopt the specific recommendations from the manufacturers as they do not reflect real world driving conditions as reflected in

[105] In addition, we note that the NCAP final decision notice and the accompanying test procedure document also added clarifying details to the test procedure. It established: (1) A minimum width that the driver door should be opened (234 mm—or 9.2 in—the width of a 50th percentile male's chest); (2) that driver door is considered open at the "first detected movement when the door edge of the driver's door is no longer flush with the exterior body panel at the B-pillar;" and (3) that the driver door is shut afterwards.

[106] Mazzae, E. N., et al. (2008). On-Road Study of Drivers' Use of Rearview Video Systems (ORSDURVS), *supra.* Our data analysis currently does not enable us to conclude how far drivers generally travel between the 1.0 second after some drivers start backing the vehicle and the 2.0 second response time requirement. To ascertain this information, we would need to consider not only the time at which drivers generally begin their backing maneuvers, but also the rate at which they accelerate their vehicles and the speed to which they accelerate. In our studies, we observed a variety of average backing speed (e.g., 3.3 ft/second and 1.5 ft/second in Studies 1 and 3, respectively). However, we do not have information that indicates at what rate drivers accelerate the vehicle. As the rate of acceleration is crucial towards understanding how much distance a driver generally covers in the first second of the backing maneuver, we do not believe the current data enable us to make any conclusions on this matter.

[107] We note that, in response to the NCAP request for comments, the Alliance commented (without any additional reasoning) that a 3.0 second response time is the most appropriate. Similarly, GM commented that a 2.5 second response time is needed to accommodate systems using integrated console displays (as opposed to in-mirror displays). They reasoned that integrated console displays would take longer to initialize than in-mirror displays. As we stated in our NCAP final decision notice, these comments did not compel the agency to change the 2.0 second response time criterion for the purposes of NCAP. We reiterated our concern that, even if a system shows the appropriate view of the area behind the vehicle at an appropriate size, the driver will not be able to avoid a crash if the system is not active when the vehicle is moving in reverse. We also restated that the 2.0 second image response time was proposed originally in the NPRM for this rulemaking to accommodate in-mirror displays that would take longer than integrated console display to initialize because they are not normally activated prior to the backing maneuver for other purposes (e.g., for infotainment or navigation functions). Without any reasoning to support why integrated console displays now require additional time beyond that of the in-mirror displays to initialize, we declined to extend the response time criterion for the purposes of NCAP. In addition, for the purposes of today's final rule, we believe the same facts continue to be true. Thus, we also conclude in today's final rule that 2.0 seconds is the appropriate response time.

[108] As discussed previously in this document, today's final rule establishes a backing event which begins when the vehicle is placed into reverse. Thus, altering the response time requirement to 2.0 seconds after the beginning of the backing event does not substantively change this requirement from the proposed rule in the NPRM.

the available data. While we note that manufacturers currently use various triggers to begin the initialization process, we believe that both the 10 second initialization condition recommended by Global Automakers and the 4 to 20 second initialization condition recommended by the Alliance is not appropriate for this safety equipment. As it does not seem reasonable to expect drivers to wait 10–20 seconds for rear visibility systems to initialize before commencing their backing maneuvers, following the manufacturer's recommendation would aggravate our safety concern that drivers may begin backing maneuvers before the rearview image is available.[109]

Thus, in an effort to address the aforementioned safety concern while not imposing a regulatory burden that does not reflect real world driving conditions, the agency is adopting the vehicle conditioning test procedure from the NCAP final decision notice that will condition the vehicle prior to the rearview image response time testing in section S14.2 of today's final rule. For the reasons we stated above (and in the NCAP final decision notice) we believe that the 4.0 to 6.0-second vehicle conditioning procedure adopted for the purposes of NCAP would also be suitable for assessing compliance with the requirements adopted in today's final rule. We believe that this procedure establishes an objective and practicable testing method that appropriately addresses the safety need (i.e., ensuring that the rearview image is available during the backing maneuver) while also affording manufacturers as much design flexibility as possible.

In this procedure, the vehicle condition will be established by opening the driver's side door,[110] closing the driver's side door,[111] activating the vehicle's starting system using the key, and selecting the vehicle's reverse direction. This procedure, starting with the opening of the vehicle door, and ending with selecting the vehicle's reverse direction,[112] will occur in no less than 4.0 seconds and no more than 6.0 seconds in order to reflect the naturalistic driving data mentioned above. While the requirements of today's final rule do not impose the burden on testing facilities to place the vehicle into reverse at exactly 4.0 seconds, today's rule allows for the agency to test for compliance with the 2.0 second rearview image response time requirement at any point between 4.0 and 6.0 seconds after the initiation of the test procedure.

However, the agency recognizes that current visibility systems response times vary considerably between manufacturers and even within each manufacturer. We further recognize that the aforementioned test procedure will not accommodate all the available rear visibility systems currently used by manufacturers. However, as noted by Honda in its comments, we believe that newer systems have been (and will be) developed to reduce initialization and response time. We further acknowledge the Alliance's concern that compelling the immediate compliance of all rear visibility systems with the response time requirements would significantly increase costs by forcing manufacturers to conduct expensive redesigns outside of the normal product cycle. Thus, as will be further discussed later in this document, we have adjusted the phase-in schedule in today's final rule to no longer require that manufacturers comply with the image response time requirement until the end of the 48-month statutory phase-in deadline.

In addition to the aforementioned test condition, we also agree with Magna, Volkswagen, and the Alliance that large discrepancies in ambient room temperature may create unnecessary variation in response time testing. We agree with Magna's recommendation and believe that a temperature condition range from 15 degrees Celsius to 25 degrees Celsius most closely approximates the temperature environment and capabilities of the available testing facilities. Thus, today's final rule adopts the temperature condition range of between 15 and 25 degrees Celsius (as measured from the interior of the vehicle) from the NCAP final decision notice to ensure test repeatability.

Separately, we decline to specify a manual transmission gear position as suggested by the Alliance in the technical workshop. As the test conditions in S14.2 now specify that the compliance technician shall place the vehicle direction selector into reverse, there is no need to specify a gear position for manual transmissions because the conditions in S14.2 assume that the transmission condition cannot be in reverse prior to the beginning of the test.

Finally, the agency has considered the Advocates' suggestion of requiring an interlock which would prohibit the vehicle from moving in reverse prior to the rearview image being active. The agency has particular concern with both the technical aspects of such a requirement as well its potential unintended consequences. As mentioned earlier in this document, the agency is particularly cautious that it does not wish to create additional, unintended safety risks. We acknowledge interlocks as a possible solution to the safety concern that drivers may begin backing maneuvers without the benefit of the rearview image. However, we are also cautious of

[109] For the same reason, we do not adopt the suggestion from the Global Automakers' comments to the NCAP request for comments suggesting that the vehicle conditioning procedure begin when the vehicle ignition is activated. While we recognize that manufacturers may design their rearview video systems to activate at the same time as the ignition, we do not believe it is necessary or appropriate to adjust the vehicle conditioning procedure for the image response time to begin at that point. Nothing in the vehicle conditioning procedure adopted in today's final rule precludes manufacturers from designing their systems to initialize when the vehicle's ignition is activated. However, to adjust the vehicle conditioning procedure to begin at a later time would aggravate our safety concern that the rearview image may not be available to drivers when they begin their backing maneuvers.

[110] As in the NCAP test procedure, today's final rule includes various details in the test procedure to clearly define the conditions of the test. However, instead of specifying a minimum width that the driver door should be opened, today's rule states that the driver door is open "to any width." We believe that this test condition is more appropriate in this context for a few reasons. First, it defines the possible conditions under which the vehicle may be tested. Second, it does not require a testing facility to test under an exact door opening width condition when the performance requirements are based on time measured from the point when the door opens. In other words, the exact width at which the door is opened is not determinative of the outcome of the test so long as the door is opened. Today's final rule also adopts the clarifying detail to define when the driver door is open. The test procedure states that "driver door is open when the edge of the driver's door opposite of the door's hinge is no longer flush with the exterior body panel" We believe that, given the importance of timing in this test procedure, it is important to establish as clearly as possible when the test procedure begins. However, this language is slightly different from the NCAP test procedure (which assumed the door opening would also be along the B-pillar) in order to accommodate any vehicles with driver doors that open using a different mechanism.

[111] We've adopted this procedure from the NCAP test procedure as well as we believe this more fully simulates the real world conditions under which the systems will operate (i.e., drivers will not generally begin backing maneuvers without first closing the door).

[112] We note that the NCAP final decision notice adopted a vehicle conditioning procedure that ended with the "selection of the reverse direction" of the vehicle as opposed to placing the vehicle in the reverse direction. We received comments in response to the NCAP request for comments seeking clarification about how the agency would determine whether the vehicle was in reverse. Some commenters suggested using the vehicle's backup lamps as a reasonable proxy for determining that the vehicle is in reverse. We responded in the NCAP final decision notice by stating our intention that the vehicle conditioning procedure begin with the selection of the reverse direction. We also stated that, while it is possible that the activation of the backup lamps is a reasonable proxy for determining when reverse has been selected, it is not the only valid method. We believe that these clarifications on when the vehicle conditioning procedure ends are also useful for the purposes of today's final rule. Thus, we have adopted this language in S14.2.

the possibility that such a requirement could lead to increased safety risks (such as when conducting three-point turns in traffic). Without additional research, the agency does not believe that it can thoroughly evaluate the economic costs, the safety benefits, and the potential safety risks of such a requirement at this time. Therefore, this final rule does not incorporate an interlock requirement.

i. Display Luminance

In order to ensure adequate visibility for the driver of the test objects in the display under a variety of conditions, the agency suggested in the ANPRM that a minimum brightness requirement may be necessary. In response to the ANPRM, the agency received one comment from Gentex suggesting that a 500 cd/m^2 would be appropriate. Based on this comment, the NPRM proposed to require that when tested in accordance with the proposed test procedure, the luminance of an interior visual display used to present the rearview image shall not be less than 500 cd/m^2. While the display units that had been reviewed by the agency seemed to have adequate display brightness, the agency reasoned that it is necessary to propose a minimum brightness level in order to ensure that drivers can see the rearview image under all lighting conditions.

Comments

The comments on the NPRM generally agreed that the 500 cd/m^2 requirement is inappropriate and cited a number of concerns. First, the manufacturers stated that the 500 cd/m^2 requirement is too bright for most driving situations. The Advocates supported the concerns of the manufacturers that the 500 cd/m^2 requirement is set too high. Second, the manufacturers stated that simply regulating display brightness is not a practicable standard because there are many different factors (such as contrast ratio, color chromaticity, uniformity, reflectance, etc.) which contribute to the quality of the video display. Finally, both manufacturers and suppliers such as Panasonic and Brigade stated that display luminance must be driver-adjustable in order to be practicable in all real-world driving conditions.

However, commenters suggested different approaches in setting a practicable standard. The Advocates suggested that the agency adopt SAE J1757 in place of the 500 cd/m^2 requirement. Toyota's comments supported the Advocates' suggestion of SAE J1757, but also recommended, in the alternative, that the agency consider ISO 15008. On the other hand, comments from the Alliance assert that the requirements of FMVSS No. 101 would adequately regulate display luminance. Further, Ford stated in its comments that FMVSS No. 101 currently does not regulate video displays and would require changes to the regulatory text to apply in this situation.

Finally, two commenters raised concerns regarding the proposed test procedure for display luminance. Global Automakers expressed concern that many of the parameters for the display luminance test have not been specified and requested that NHTSA specify parameters such as temperature, positioning of the measuring device, etc. Additionally, Panasonic requested in its comments that the testing procedure require an all-white screen test pattern.

Agency Response

The agency continues to believe that the ability of a driver to view a display with a high-quality rearview image is important. However, the agency has elected not to include minimum display performance requirements in today's final rule without conducting additional research. After reviewing the comments on the NPRM, the agency believes that specifying objective and practicable requirements in this area of performance has many complex challenges and the agency is not aware of any performance requirements that can objectively and practicably address our concern.

We note that while the commenters stated that the single value 500 cd/m^2 luminance requirement for a display performance will not be appropriate under the majority of ambient lighting conditions, the agency did not intend for rearview displays to achieve 500 cd/m^2 under all driving conditions. The NPRM proposed that rearview displays achieve 500 cd/m^2 under the conditions specified in the test procedures and did not seek to preclude manufacturers from providing drivers the means with which to adjust the display luminance. However, the agency agrees with the commenters that display luminance alone does not provide a complete evaluation of the screen's ability to provide the driver with a rear image suitable for detecting objects such as children behind the vehicle. For instance a display that provides a very bright image, but does not provide adequate contrast, will not provide an image where an object within the field of view is discernible. Similarly, two screens with identical luminance and contrast can manage glare in ways that are different enough to provide significantly different display performance in various ambient conditions. Additionally, the agency notes that adopting only a luminance requirement may be unnecessarily restrictive of technologies such as transflective LCD technologies which can combine traditional backlighting and reflective lighting in order provide improved image quality in all ambient lighting conditions.

In response to commenters' suggestion that that the agency instead consider adopting SAE J1757 or ISO 15008, NHTSA has reviewed these industry standards and has concluded that they are not suitable for incorporation in this rule. In regards to the Advocates suggestion that the agency adopt SAE J1757, the agency found that SAE J1757 provides detailed test processes for measuring various aspects that influence display performance. However, SAE J1757 does not provide threshold values for which the agency could use in setting minimum performance requirements. Thus, the agency does not believe SAE J1757 is appropriate for this rule. Similarly, the agency also considered ISO 15008. While ISO 15008 offers minimum standards in relation to basic factors such as character legibility and color recognition, we agree with as the Alliance's comments which noted that the ISO industry standard is not intended to apply to displays which utilize video images such as those that will likely be used by the manufacturers to fulfill the requirements of today's final rule. ISO 15008 specifically states that it is not applicable to more complex display technologies such as head up displays, maps/navigation systems, and rearview cameras. For these reasons, NHTSA believes that ISO 15008 is also inappropriate for incorporation into this rule.

Separately, NHTSA has considered both the Alliance and Ford's comments regarding utilizing the illumination requirements of FMVSS No. 101 to regulate display luminance. For the reasons mentioned above regarding the complexity of the factors that determine display performance, the agency no longer believes that adopting only a luminance requirement will adequately ensure display performance. Thus, we decline to adopt the changes suggested by the Alliance and Ford which would utilize the performance tests from FMVSS No. 101 to regulate display performance in today's final rule.

For the aforementioned reasons, the agency concludes today that we are not aware of any performance requirements that can objectively and practicably address our concern regarding the importance for the driver to have access

to a display which presents a high-quality rearview image. However, as the agency previously noted in the ANPRM, we are currently not aware of any display units installed by manufacturers which do not have adequate display performance under a majority of lighting conditions. Further, we recognize that the display performance aspect of the rear visibility system is readily apparent to a driver. Therefore, the agency expects vehicle manufacturers to continue to use capable displays in order to meet the expectations of their customers. Additionally, we note that our decision to not include minimum display performance requirements in today's final rule does not relieve the manufacturers from providing a reasonable level of display performance to ensure that their customers are able to successfully utilize this important safety feature.

Finally, given the agency's decision not to include a minimum display performance requirement, we note that the concerns cited by Global Automakers and Panasonic in regards to the display luminance test procedure are no longer applicable to today's final rule.

j. Durability Testing

In the ANRPM, the agency expressed concern regarding the reliability of rear visibility systems and how well such systems would perform under prolonged exposure to varying weather conditions. In response to the ANPRM, IIHS commented that current rear visibility systems have a wide range of quality in regards to weather resistance and recommended NHTSA pursue a minimum standard. On the other hand, Sony commented that cameras utilized in rear visibility systems are generally well protected against the elements. Considering these comments, the NRPM proposed to include vehicle level durability performance requirements which stated that the rear view system must still be able to display a compliant field of view after exposure to corrosion, humidity, and temperature tests. We reasoned that adopting existing requirements from our lighting standard (FMVSS No. 108) would be appropriate as exterior rear visibility system components are typically mounted similarly to vehicle lamps and are exposed to similar weather conditions.

Comments

In general, the comments from manufacturers state that the durability requirements proposed in the NPRM were impracticable as they were proposed as vehicle standards. The Alliance noted that the durability tests that were modeled after FMVSS No. 108 are frequently performed at the component level when certified to FMVSS No. 108. Global Automakers further stated that conducting these tests at the vehicle level creates impracticable challenges. For example, its members are unaware of any facility that will be able to perform the temperature variation test on an item as large as a whole vehicle.

On the other hand, comments from suppliers took varying positions. For example, Rosco agreed with the manufacturers that the standard should require a component test instead of a vehicle test because commercial vehicles have varying body styles and it would be impractical to test all the different vehicle configurations. Sony commented that its systems should not have any problem meeting the durability requirements as they were proposed in the NPRM. Using a different approach, Brigade recommended in its comments that the agency instead consider ISO standards and consider adopting the International Protection (dust/water resistance) rating of IP67 as a minimum standard for durability. More specifically, Bosch recommended that the agency consider the following standards: IEC 600068–2–1 Cold, IEC 60068–2–2 Dry Heat, IEC 60068–2–11 Salt Mist, IEC 60068–2–14 Temperature Cycling, IEC 60068–2–27 Shock, IEC 60068–2–30 Damp Heat, IEC 60068–2–38 Temperature and Humidity Cycling, IEC 60068–2–52 Salt Mist, ISO 16750–1 General Environment, ISO 16750–2 Electric Loads, ISO 16750 Mechanical Loads, ISO 16750 Climatic Loads, and ISO 16750 Chemical Loads.

Separately, Global Automakers requested clarification as to the test procedure and whether or not the durability tests would be performed in succession of each other.

Agency Response

Based on the comments received, the agency agrees that the vehicle based durability requirements of the NPRM are impracticable and therefore has adjusted these requirements to apply only to external components. We believe that the requirements, as proposed in the NPRM, would impose unnecessary certification costs without providing significant additional safety benefits to the public beyond those achievable through component level testing. We continue to be concerned that component failure as a result of temperature variations, water incursion, or corrosion may pose a safety risk to pedestrians and believe that the tests proposed in the NPRM are the appropriate tests to address this safety concern. However, we believe that testing durability at a component level will provide substantially similar protections to the public. Thus, in lieu of a vehicle standard, the agency adopts the durability standards proposed in the NPRM for external components.[113]

Component Level Testing

The agency agrees with the Alliance that the durability requirements in the NPRM contain considerable technical challenges for a vehicle testing facility and that component level testing would be more appropriate. A test facility capable of evaluating a vehicle for the proposed temperature exposure test would require a vehicle sized chamber to maintain a 176 °F temperature and within 5 minutes reduce the temperature to 32 °F. The agency recognizes that although such test facilities exist on a much smaller scale for component level equipment such as vehicle lighting, a vehicle sized chamber capable of removing the internal energy (heat) stored within the mass of a vehicle and the air within the chamber would require considerably greater power. Similarly, the agency agrees that precise control of both temperature and humidity required by

[113] In addition to adopting the proposed durability requirements from the NPRM on a component level, today's final rule also makes a technical adjustment to the proposed salt spray test procedure by using a newer version of the same ASTM salt spray testing procedure. The NPRM proposed to subject the vehicle to two 24-hour cycles of salt spray testing in accordance with ASTM Standard B117–73 (with one hour of rest in between each cycle). This procedure proposed in the NPRM was the 1973 version of the ASTM ''Standard Method of Salt Spray (Fog) Testing.'' While this ASTM standard does not establish threshold values for how long to expose a given test specimen to the salt spray testing, it does provide the methodology for conducting the test (e.g. specifications for the water used in the test, the test chamber, etc.). Since the agency has already incorporated by reference the 2003 version of this same standard (ASTM B117–03) in FMVSS No. 106, the agency decided to review both ASTM B117–73 and ASTM B117–03 to determine if it would be more appropriate to incorporate the newer standard in today's final rule. After conducting our review, we have concluded that there are no differences between the 2003 version and 1973 version of ASTM B117 that would lead to any significant changes in the results of the salt spray testing. While we discovered that in various instances (such as the water specifications and air supply specifications) the 2003 version of the test procedure is more specific (has a narrower tolerance range) than the 1973 version of the test, the agency does not believe this will significantly alter the test results or the burden of conducting the test. As in the NPRM, the test specimens would still be subjected to two 24-hour salt spray cycles with 1 hour of rest in between. Thus, as the agency believes that the 2003 version of the ASTM standard may be more readily available to the public and that the 2003 version does not contain any significant changes as compared to the 1973 version, the agency has decided to incorporate the 2003 version of ASTM B117 into today's final rule.

the proposed humidity exposure test for a vehicle is not practical for testing the rear visibility system. Finally, the agency notes that a vehicle based corrosion test would require considerable quantities of salt solution and application nozzles. While such a test facility may be practical for the corrosion test, the agency believes that a component level test is capable of achieving similar evaluations with much less cost. Thus, today's final rule adopts the durability tests proposed in the NPRM, but instead applies these tests on a component level.

We believe that individual components, which are exposed to the exterior of the vehicle, can be tested using an appropriate test fixture to simulate the critical areas of interest and potential failure. In order to accomplish this, the agency is specifying in the regulatory text that an environmental test fixture be used during compliance testing to simulate the body condition with respect to the external components' orientation and sealing. We believe that proper consideration of the orientation is an important factor in evaluating both a component's ability to dissipate heat as well as to manage water. Additionally we believe that a proper camera to body seal simulation is important in predicting the level of performance of the component's resistance to water intrusion when installed on the actual vehicle. We believe that considering such conditions, component level testing can achieve similar results as the vehicle tests presented in the NPRM.

Adoption of Temperature, Humidity, and Salt Tests From the NPRM

The agency believes that the tests proposed in the NPRM are a reasonable proxy for ensuring that rear visibility systems will not be prone to failure when subjected to prolonged exposure to a range of typical environmental conditions, representative of those experienced in real-world vehicle use. The agency continues to believe that, because the exterior components of rear visibility systems will be mounted on a vehicle in locations which are exposed to similar weather conditions as vehicle lamps, tests based on the requirements of FMVSS No. 108 are appropriate. These durability tests from FMVSS No. 108 appropriately ensure that manufacturers account for various unique design challenges that are present in automotive applications of the components that the agency anticipates will be used in rear visibility systems. The agency is concerned that without proper consideration and testing, a rear visibility system utilizing a camera may experience electronic component failure when exposed to thermal cycles. Likewise, the lens portion of the optical system of the camera may be prone to fogging or water intrusion as a result of exposure to humidity variations or road spray conditions and thereby not provide a visible rearview image.

The temperature and humidity tests both account for the ability of rear visibility system exterior components to manage condensation. The agency believes that is one of the most likely areas of failure for rear visibility systems because designing exterior components with both the ability to manage potential condensation inside the component, during humidity and temperature variations, while also managing external water intrusion is a particularly difficult engineering challenge. The failure to manage either of these two water sources may damage the rear visibility system. Further, it is important that exterior components on a rear visibility system be designed to resist salt corrosion. Unlike equipment designed for other applications, equipment designed for application on a motor vehicle are exposed to a significant amount of salt during normal use as many vehicles subject to the requirements in today's final rule will be used on roads that have been treated with salt for cold weather conditions.

To further ensure that the proposed tests in the NPRM are appropriate for application to rear visibility systems, the agency has evaluated several currently available rearview camera systems, on a component level, utilizing a procedure based on the durability tests proposed in the NPRM.[114] As the agency anticipated, the majority of rearview camera systems it evaluated performed well. However, because these results were not consistent over the entire set of rearview camera systems evaluated, the agency questions whether all rear visibility systems used to fulfill the requirements of today's final rule will perform well when subjected to the aforementioned tests.

We believe these types of system failures can create safety risks and are the likely modes of failure for rear visibility systems. Therefore, the agency believes that rear visibility systems should be designed to resist these typical ambient conditions. Thus, while the agency does not adopt the proposal in the NPRM to conduct these durability tests on a vehicle level, the agency believes that these tests continue to be important for ensuring the real-world reliability of these important safety systems and adopts these tests on a component level.

Consideration of Voluntary Industry Consensus Standards

As required under the National Technology Transfer and Advancement Act, the agency examined standards from various standards organizations in order to ascertain if any voluntary industry consensus standards were suitable for inclusion in today's final rule. Similarly to the comments from Bosch and Brigade, we concluded that various aspects of certain ISO standards and the IP rating system address similar concerns that are covered by the durability tests adopted in today's final rule. However, we have not included those standards in today's final rule for several reasons.

First, while we agree with Bosch that ISO 16750–1 General Environment, ISO 16750–2 Electric Loads, ISO 16750 Mechanical Loads, ISO 16750 Climatic Loads, or ISO 16750 Chemical Loads can be used to evaluate a rear visibility system's ability to resist environmental conditions, we decline to adopt them in their entirety because these standards cover performance requirements beyond those being considered by the agency. The aforementioned ISO standards are collections of various other voluntary industry standards which address many aspects of performance that are useful for a manufacturer designing a vehicle but not suitable for inclusion in a minimum safety standard. Beyond the safety concerns that we identified in the paragraphs above, the aforementioned ISO standards include aspects of performance such as vibration/shock load protection and chemical resistance. In addition to raising questions as to whether such additional requirements would be within the scope of notice of this rulemaking, these voluntary consensus standards cover aspects of performance where the agency does not anticipate frequent failure. For example, the vibration/shock load standard may be useful in evaluating the performance of other motor vehicle equipment, but does not seem to be as crucial for a rear visibility system where the agency anticipates manufacturers will use equipment with few (if any) vulnerable moving parts.[115] Further, the agency does not anticipate rear visibility system components to fail due to an inability to resist chemicals as rear visibility components generally have a smaller

[114] Mazzae, E. N., Andrella, A. (2011). Rear Visibility System Durability Testing Applied to Model Year 2010–2012 Light Vehicles. National Highway Traffic Safety Administration, Docket No. NHTSA–2010–0162–0226.

[115] For this same reason, we are not adopting IEC 60068–2–27 Shock.

exterior surface than other exterior vehicle equipment and therefore have limited exposure to chemicals such as gasoline and windshield washer fluids. Additionally, these components will likely be designed and mounted so as to dissipate liquids in order to meet our humidity and salt spray performance standards. Thus, while the agency encourages manufacturers to design rear visibility systems to be as reliable as possible, the agency does not adopt any of the aforementioned ISO standards as they cover additional aspects of performance that are not suitable for inclusion in a minimum safety standard.

Second, the agency considered the portions of the ISO standards which directly address temperature, humidity, and salt resistance. These portions of the ISO standards are IEC standards which have been designed to test the aforementioned aspects of performance. IEC 600068–2–1 Cold, IEC 60068–2–2 Dry Heat, and IEC 60068–2–14 Temperature Cycling address the ability of the rear visibility system exterior component to resist significant temperature variations. IEC 60068–2–30 Damp Heat and IEC 60068–2–38 Temperature and Humidity Cycling address the ability of those same components to manage water and dissipate condensation. Finally, IEC 60068–2–11 Salt Mist and IEC 60068–2–52 Salt Mist address the ability of those exterior components to resist corrosion due to prolonged exposure to salt. While many of these standards are suitable for manufacturer use in designing vehicles we conclude today that they are not suitable for incorporation into today's final rule.

In regards to the temperature variation standards, IEC 600068–2–1 Cold, IEC 60068–2–2 Dry Heat are not suitable for incorporation into today's rule because these standards merely establish a methodology for exposing a given component to hot and cold conditions but do not establish threshold values that the agency could use as a standard. Thus, the agency examined IEC 60068–2–14 Temperature Cycling which provides a test and the associated requirements to determine the ability of components to withstand rapid changes in ambient temperature. This standard is similar to the temperature test we have adopted in today's final rule except for one significant difference. Our proposed test requires that the sample be exposed to a high temperature and then transitioned to exposure at a low temperature within 5 minutes. IEC 60068–2–14 Temperature Cycling requires this transition of temperatures to take place within no more than 3 minutes. This rate of temperature change is significantly more severe than what we proposed, and more severe than we believe is necessary. During our tests of the exterior components of currently available rear visibility systems, we found that durability performance was not consistent among all the components tested.[116] As the rear visibility systems selected by the agency represent the type and quality of rear visibility systems we expect manufacturers to be using to meet the requirements of today's rule, the agency is concerned that this significant increase in stringency of the temperature cycle test could impose a significantly greater burden than is necessary. Accordingly, without additional information regarding the possible benefits to be gained by this increased stringency, the agency does not believe it is appropriate to adopt a standard which requires the temperature variation between hot and cold to occur within 3 minutes at this time. Therefore, we have not included the requirements of IEC 60068–14 in this final rule.

We also decline to adopt the two IEC standards which evaluate the resistance of a component to temperature cycling in a high humidity environment. We have not adopted IEC 60068–2–30 Damp Heat because it does not contain a temperature range at the freezing point of water. The agency believes that it is important for our humidity test to include a freezing temperature condition because many vehicles sold in the United States will be regularly exposed to these temperatures. It is important that manufacturers design rear visibility systems which properly manage condensation and its potential to freeze within the rear visibility system component. If such condensation is not properly managed, the agency is concerned that freezing condensation can create a part failure when rear visibility systems are exposed to such temperatures.

On the other hand, IEC 60068–2–38 Temperature and Humidity Cycling does include a testing temperature below freezing. However, it contains a temperature range which is significantly greater than those proposed in the NPRM. IEC 60068–2–38 Temperature and Humidity Cycling requires that components be exposed to a high temperature of 65 °C and a low temperature of −10 °C. As the purpose of the temperature cycle is to test the ability of an exterior component to manage water condensation which forms as the temperature decreases, we do not believe such a large temperature range is necessary. The test included in today's final rule includes temperatures which simulate a hot and humid climate and then reduces that temperature to freezing. We believe that this temperature range is sufficient to create the conditions of water condensation on the exterior components being tested and the freezing of that condensation. The agency is not aware of any need to include in the humidity test temperature conditions as varied as those from IEC 60068–2–38 Temperature and Humidity Cycling as the agency will still test the ability of these components to resist significant temperature variations through the temperature cycling test. Further, as mentioned above in our discussion of IEC 60068–2–14 Temperature Cycling, the agency does not wish to introduce requirements in today's final rule that may be more stringent or costly than those proposed in the NPRM without any information demonstrating an increased safety benefit to the public. Therefore, we have not included IEC 60068–2–38 in this final rule.

In today's final rule, we also have not adopted IEC 60068–2–11 and IEC 60068–2–52, which relate to salt mist. In our review of IEC 60068–2–11, we found that this test is designed primarily for the purpose of comparing the resistance to corrosion from salt mist of specimens of similar construction. Such a test seems to be for the purpose of ensuring that when a manufacturer is producing many copies of the same product, they all conform to the same quality standards. As this test is most useful as a quality/uniformity measurement, and not as a minimum performance standard, we have chosen not to use this test in this final rule.

However, the second salt mist test (IEC 60068–2–52) is similar to our proposed test in many ways. As with our proposal, this test exposes the test sample to a salt mist within a high humidity environment using atomizers at an elevated temperature. The primary difference is that the IEC standard cycle (specifically the severity levels (3) through (6) which are applicable to automotive applications) expose the test sample to a salt mist for 2 hours, and then expose the sample to a high humidity climate for 22 hours. Our proposed test cycle subjects the sample to a salt mist for 24 hours, with a 1 hour rest period. However, in spite of the different durations of application for the salt mist, we believe that the tests are similar because continued exposure to a high humidity environment is the most

[116] Mazzae, E. N., Andrella, A. (2011). Rear Visibility System Durability Testing Applied to Model Year 2010–2012 Light Vehicles, *supra.*

important condition that needs to be maintained during the test cycle. Maintaining conditions of high-humidity is crucial because after the application of the salt mist, increased humidity encourages corrosion. As this condition occurs in both tests, we do not anticipate that one test will be more or less stringent than the other.[117] In spite of this similarity, today's final rule adopts the salt mist test proposed in the NPRM because it is a standard that industry has experience using for the purposes of certifying compliance with FMVSS No. 108 and because it also utilizes a voluntary industry consensus standard (from ASTM [118]). Therefore, we have chosen not to use the IEC standard 60068–2–52 for the corrosion test of this final rule.

Separately, we note that Brigade suggested IP67 as an appropriate minimum standard. The IP rating is a system which rates a component's resistance to solid and liquid substance intrusion. The first number following the IP letters is the solid substance intrusion rating and the second number is the liquid substance rating. We decline to adopt IP67 as a minimum standard because we are concerned that IP67 may be too stringent. The number 6 in IP67 prohibits any level of solid substance intrusion (including dust intrusion). We note that a level 5 on the same IP rating scale would permit a small amount of dust intrusion. Dust is not one of the major failure modes that the agency has identified and the agency is concerned that establishing a solid substance intrusion standard of 6 may be overly stringent considering the fact that the agency is less concerned with dust intrusion than with the ability of the rear visibility system component to dissipate condensation. The agency is also concerned that the use of the standard of 7 for the liquid substance intrusion may be overly stringent. Establishing the liquid substance intrusion standard of 7 in IP67 would require that the component be immersed in water at a depth of up to 1 meter for a duration of 30 minutes. To test the exterior component in this fashion, would not take into account the mounting angle/orientation of the component (and possibly other design features) that can be used to dissipate water. Thus, to require an IP67 rating for rear visibility system exterior components may preclude certain water/moisture management strategies and may be unnecessarily design restrictive without offering any significant additional protection to the public.

Clarification of Order of Testing

In response to Global Automakers request for clarification as to the order of testing, we agree that the proposed test procedure in the NPRM did not describe the order in which the tests will be performed and when the rear visibility equipment will be evaluated for the field of view and image size requirements. Thus, we have amended the regulatory text to clarify that the field of view and image size performance requirements will be evaluated at the conclusion of each of the three durability tests.

k. Phase-In

The K.T. Safety Act requires that regulations established by this rule prescribe a phase-in schedule which requires full compliance with this rule no later than 48 months after the issuance of today's final rule. The K.T. Safety Act further instructs NHTSA to consider prioritizing different vehicle types in the phase-in schedule based on data on the frequency by which different vehicle types are involved in backing incidents. In comments on the ANPRM, Honda and AIAM expressed concern over the feasibility of a 48-month phase-in schedule. They noted that depending on the requirements of the final rule, a 48-month phase-in schedule could require manufacturers to conduct expensive ''off-cadence'' redesigns for their vehicles outside of the normal redesign schedule. Instead, these commenters suggested that a six year phase-in schedule would be reasonable.

The NPRM declined to allow a six year phase-in schedule as the K.T. Safety Act requires a phase-in schedule which mandates full compliance by 48 months. However, in order to address the commenters' concerns, the NPRM proposed a ''rear-loaded'' phase-in schedule with a first year phase-in requirement that is lower than the number of vehicles already anticipated to be equipped with rear visibility systems. Specifically, we proposed a phase-in schedule which would have no requirements for the first year after publication of the final rule, require 10 percent in the second year, 40 percent in the third year, and full compliance at the end of the 48-month statutory period. The NPRM proposed to apply this same phase-in schedule separately to passenger cars and MPVs.

To provide additional flexibility, the NPRM proposed to include limited carry-forward credits in order to enable manufacturers to count early compliance towards the phase-in targets. To accomplish this, the proposed regulatory text expanded the period during which manufacturers could count compliant vehicles for the second and third year targets of the phase-in period. For the second year phase-in target of 10 percent, the proposed text allowed manufacturers to count all vehicles produced between the publication of the final rule and the end of the second year. For the third year phase-in target of 40 percent, the proposed text allowed manufacturers to count all vehicles produced between the publication of the final rule and the end of the third year (as long as those vehicles had not been counted towards the second year's target). As the K.T. Safety Act requires full compliance with this regulation by the end of the 48-month period, the carry-forward credit system proposed in the NPRM did not allow for credits to be carried beyond the 48-month deadline.

Finally, we proposed to exclude limited line, small, and multistage manufacturers from the phase-in schedule and proposed to require that they be fully compliant by the end of the statutory phase-in period of 48-months. The agency reasoned that small, limited line, and multistage manufacturers face unique circumstances which necessitate additional flexibility. We noted that these manufacturers have longer product cycles and lack the sufficient number of product lines in order to efficiently apply redesigns to only a portion of their fleet as contemplated by a phase-in schedule. Thus we proposed, as we have in previous rules that provided a phase-in, to afford these manufacturers additional flexibility.

Comments

In response to the NPRM, the agency received comments from manufacturers generally expressing concern that the proposed phase-in schedule would require manufacturers to conduct expensive, ''off-cadence'' redesigns of their vehicles. The Alliance noted that while many manufacturers are currently installing rear visibility systems on their vehicles, the majority of these systems are unable to meet the entire set of performance requirements proposed in the NPRM. In order to increase flexibility and ensure that the regulation remains practicable, the Alliance

[117] The continued application of salt mist creates a high-humidity condition. Therefore, while one test applies the salt mist for 2 hours and the other for 24 hours, both tests maintain a high humidity condition for 24 hours of each test cycle.

[118] As noted above, today's final rule utilizes the 2003 version of the ASTM standard instead of the 1973 version because the agency has determined that there are no significant differences between these two versions of the standard and the agency believes that the 2003 version will be more readily accessible to the public.

comments (supported by many of the individual manufacturer comments) offered a number of suggestions.

First, the Alliance comments suggested delaying all requirements other than the field of view requirements until the end of the 48-month phase-in period. Noting the additional supply constraints from the March 2011 earthquake and tsunami in Japan, the Alliance stated that enabling individual manufacturers to incorporate the additional rearview image performance requirements during the 48-month phase-in period would allow time for proper system design and validation. Second, the Alliance recommended combining the passenger and light truck fleets in order to maximize flexibility for meeting the phase-in targets. General Motors asserted that the NPRM offered no support for a separate phase-in schedule between passenger and light truck fleets. Conversely, Porsche requested that the phase-in schedule be completely eliminated.

Finally, the Alliance also recommended that the agency adopt ''carry forward'' credits in order to expedite the implementation of rear visibility systems. In addition, varying suggestions from individual manufacturers express different positions on whether or not the carry forward credits should be allowed for use against the 48-month, 100% compliance deadline. For example, BMW specifically requested that carry forward credits be available for the final, 48-month, 100% compliance deadline. Volkswagen recommended a slightly different scenario requesting the agency allow carry forward credits for the 48-month, 100% compliance deadline but eliminate those credits a year after the 48-month compliance deadline.

Separately, the Alliance comments also requested that incomplete vehicles/multistage manufacturers be afforded an additional year beyond the normal phase in schedule. NTEA supported this concern by requesting that multistage manufacturers be given an additional year of phase-in time in order to have time to determine their compliance strategy after the OEMs have come into full compliance.

Agency Response

The phase-in schedule established by today's rule, excluding small volume and multi-stage manufacturers, is as follows:

- 0% of the vehicles manufactured before May 1, 2016;
- 10% of the vehicles manufactured on or after May 1, 2016, and before May 1, 2017;
- 40% of the vehicles manufactured on or after May 1, 2017, and before May 1, 2018; and
- 100% of the vehicles manufactured on or after May 1, 2018.

The phase-in schedule proposed in the NPRM was based on an assumption that most of the current systems met the requirements of the rule or could be easily modified to comply with the requirements of the rule. Based on comments received, the agency has learned that many of the currently available systems are unable to comply with all of the additional requirements beyond those involving the required field of view without significant design modifications. As the agency wishes to maximize today's final rule safety benefits while avoiding imposing a significant additional cost burden on manufacturers beyond those anticipated in the NPRM, today's final rule delays the compliance date for all the performance requirements other than field of view until the end of the 48-month phase-in deadline mandated by the K.T. Safety Act.[119]

In spite of this adjustment to the phase-in schedule, the agency does not expect a negative impact on the estimated safety benefits of today's final rule. While the image size, response time, deactivation, durability and linger time requirements are important in addressing various safety concerns, the delay of these requirements in the phase-in is not expected to significantly affect the estimated effectiveness because the research conducted by NHTSA utilized systems which were not designed to conform to all of the requirements of today's final rule. In addition, the agency believes that this adjustment to the phase-in schedule can lead to a net increase in safety benefits as it will enable manufacturers to focus, in the near term, their resources on installing rear visibility systems on more vehicles instead of utilizing those resources to conform existing rear visibility systems to all the requirements of this rule by the second year phase-in target.

However, the agency continues to believe that the requirements beyond those pertaining to the field of view in today's final rule are important to ensure the long-term quality of this important safety equipment. The agency notes that rear visibility systems have currently been designed to be equipped on vehicles as a cost-option or for more expensive vehicles. As rear visibility systems are required under today's final rule to be equipped to all vehicles with a GVWR less than 10,000 pounds, the agency is concerned with ensuring that these rear visibility systems will meet minimum performance standards even when installed on relatively low-cost vehicles in the future. The agency believes that, while relieving the manufacturers of the burden of complying with the requirements of today's rule beyond the field of view requirements during the phase-in period can lead to a net increase in safety benefits in the near term, all the requirements in today's final rule are important towards ensuring the long-term quality of rear visibility systems.

As mentioned above, the comments on the NPRM demonstrate that the costs of bringing existing rear visibility systems into compliance with all of the requirements of today's final rule (by the second year phase-in target) are significantly greater than the agency anticipated. In the NPRM we proposed a ''rear-loaded'' phase-in period which required a second year phase-in target of 10% and a third year target of 40% in order to afford the manufacturers a significant amount of flexibility. However, we acknowledge the comments from the manufacturers and agree that to require rear visibility systems which currently do not comply with all of the requirements in today's final rule to become compliant by the second year phase-in target would compel manufacturers to conduct significant redesigns outside of the normal product cycle. In the NPRM, we considered the proposed phase-in schedule to be appropriate as we assumed that most rear visibility systems currently available on the market would be able to meet the requirements proposed in the NPRM. In addition, the costs/benefits analysis in the NPRM was also based on this assumption as it did not consider the costs of redesigning rear visibility systems within the phase-in period. In order to avoid significantly increasing the costs of this rule, today's final rule does not require that manufacturers conduct costly product redesigns by the second year phase-in target. As

[119] We note that, during this phase-in period, manufacturers will still have an incentive to design systems that meet the image size and image response time criteria in NCAP. As mentioned above, in order to be listed as a ''Recommended Advanced Technology Feature'' in NCAP, rearview video systems will need to meet field of view, image size, and image response time criteria that are similar to the requirements adopted in today's final rule. While the agency does not believe that it is practical to compel manufacturers to redesign their systems to meet all these requirements during the phase-in period, NCAP will still offer consumers comparative information on rearview video systems. NCAP will help consumers identify rearview video systems that meet these additional criteria and are better able to assist drivers in avoiding backover crashes.

suggested by the Alliance, allowing additional flexibility for manufacturers to incorporate the additional design changes at any point before the 48 month deadline will allow time for proper system design and validation.

However, today's final rule adopts the phase-in schedule proposed in the NPRM in regards to the field of view requirements. We believe that the field of view requirements are the most appropriate requirements to phase-in according to the schedule adopted by today's final rule because they are crucial requirements that enable drivers to see and avoid striking pedestrians behind the vehicle. In addition, testing conducted by the agency indicates that the vast majority of rear visibility systems are currently able to meet the field of view requirements of today's final rule. Thus, by only requiring that the field of view requirements be phased-in according to the schedule in today's final rule, we believe that most, if not all, current systems can now be used to meet the phase-in requirements as anticipated in the NPRM.

Further, today's final rule no longer requires separate phase-in schedules for passenger cars and MPVs, trucks, low-speed vehicles, and buses. As we have noted on many occasions, while the crash data suggest that larger vehicles such as MPVs represent a larger portion of the fatalities, they do not represent a disproportionate amount of backover crashes in general. Thus, the agency agrees with the comments from General Motors that a separate phase-in schedule would not support the safety goals of this rulemaking. As noted in the regulatory impact analysis, manufacturers have installed a greater portion of their rear visibility systems on larger vehicles such as trucks and MPVs.[120] As the agency anticipates that manufacturers will continue this pattern with a combined fleet phase-in schedule, the agency has added the flexibility for manufacturers to combine their passenger car and light truck fleets for the purposes of phase-in compliance.

Considering this additional flexibility, the agency no longer believes the carry forward credit system is necessary as suggested by the Alliance, BMW, and Volkswagen for the following reasons. First, we note that the carry-forward credit systems proposed by BMW and Volkswagen cannot be implemented as they extend beyond the 48-month ''full compliance'' deadline required by the K.T. Safety Act. As we interpret the K.T. Safety Act, allowing carry-forward credits to be used towards the final, 100% compliance, year of the phase-in would not constitute ''full compliance'' within the meaning of the Act. Second, as the agency has adjusted the phase-in schedule to afford additional flexibility through minimizing the requirements that must be met at the beginning of the schedule, we no longer believe it is necessary to utilize a carry-forward credit system to further alleviate the burden of compliance. We also note that adopting a carry-forward credit system will instead increase the compliance burden on manufacturers by requiring manufacturers to file additional compliance documents with the agency while still being unable to afford the additional flexibility beyond the 48-month statutory deadline as requested by the commenters. Therefore, today's final rule has not included a carry-forward credit system with the phase-in schedule.

Today's final rule also adopts the exclusions proposed in the NPRM for limited line, small, and multistage manufacturers from the phase-in schedule and simply requires full compliance at the 48-month statutory deadline. The agency continues to reason that small, limited line, and multistage manufactures face unique circumstances, mentioned above, which support the need for additional flexibility. However, due to the restrictions in the K.T. Safety Act, we cannot accommodate the request of multistage manufacturers to be afforded a phase-in schedule which allows an extension beyond the 48-month deadline.

Finally, we note that the phase-in schedule has been adjusted so that the first year of the schedule begins on May 1, 2014 (with the first compliance year as between May 1, 2016 and April 30, 2017). The agency believes that adjustment in the phase-in schedule is appropriate in order to ensure that manufacturers would have the amount of time that Congress authorized the agency to allot for the phase-in period under the K.T. Safety Act.

l. Remaining Issues

Finally, the agency received other comments on the NPRM on the following additional issues. We have examined these comments and respond to them in turn in the paragraphs that follow.

Executive Order 13045

In addition to their comments mentioned above, KidsAndCars.org noted that Executive Order 13045 requires that federal agencies evaluate the environmental health or safety effects that an economically significant rule may have on children and explain why the approach selected is preferable to other potentially effective and reasonably feasible alternatives. KidsAndCars.org stated in its comments that this rulemaking is economically significant and that NHTSA is required, under Executive Order 13045, to provide the aforementioned analysis.

Agency Response

As explained below in section V, *Regulatory Analyses,* we agree that Executive Order 13045 is applicable to this rulemaking. Pursuant to the criteria set forth in Executive Orders 12866 and 13563, we agree with KidsAndCars.org that this rulemaking is economically significant and is subject to the requirements of Executive Order 13045. As we have noted below in section V, the health and safety effects of this rule on children are a central concern of this rulemaking. Thus, the environmental health and safety effects, and the potential alternatives to this rule are extensively discussed directly in this preamble and the accompanying regulatory impact analysis for today's final rule.

Driver Education and Driver Distraction

As noted in above is section II, *Background and Notice of Proposed Rulemaking,* many individual commenters stated that driver education would contribute significantly towards reducing backover crashes. In addition, KidsAndCars.org also commented that driver education will be crucial in ensuring that drivers are trained and able to effectively utilize the required rear visibility systems. In a related issue, individual commenters also expressed concern that drivers will be distracted by rearview images and focus on the displays instead of being aware of their surroundings.

Agency Response

While we noted in the NPRM that driver education may lead to greater effectiveness statistics for rear visibility systems, NHTSA currently has not yet established a new driver education campaign to complement this rulemaking. In the K.T. Safety Act, Congress was concerned with the expansion of the required field of view behind the vehicle in order to avoid backover crashes. Thus, this rulemaking focused on the possible rearview countermeasures and how they could be used to expand the rear field of view as contemplated by Congress. In general, the agency is aware of the benefit of driver education when it comes to all

[120] *See* Final Regulatory Impact Analysis, available in the docket number referenced at the beginning of this document.

crash avoidance technologies. We will continue to use *www.safercar.gov* to support these efforts and carefully consider if any additional action is warranted.

In addition, as described in our earlier discussion on linger time, deactivation, and backing event, NHTSA shares the individual commenters' concern that drivers may be distracted by the rearview images from being aware of their surroundings. Thus, we have aimed in today's final rule to ensure that the rearview image is presented to the driver only under appropriate circumstances by including restrictions on when the image shall be displayed in relation to the defined backing event. While the agency notes that the rearview image will divert some driver attention away from the rearview mirrors or windows during a backing maneuver, we believe that the increased field of view afforded to the driver through the rear visibility system will, on the whole, increase the driver's awareness of his or her surroundings.

Color/Real-time Rear Visibility Systems

While the NPRM did not propose specifications to require that rear visibility systems display the rearview image in color or in real time, two suppliers commented that such requirements would be appropriate. Sony commented that, as third party research indicates that humans possess a greater ability to recognize objects in a color environment, a color camera and display system should be required. In addition, Rosco was concerned that when a rearview video system is integrated with various other vehicle systems, there may be a time delay in which could affect the rear visibility system's effectiveness.

Agency Response

While the agency acknowledges the concerns from Sony and Rosco, the agency is unaware of any rearview video systems, currently offered on the market, which do not offer a rearview that is both in color and in real-time. We note that, as rearview displays are items of automotive equipment that drivers will frequently interact with, we believe it is reasonable to expect the decision making process of manufacturers to be significantly influenced by consumer expectations. Thus, we decline to establish requirements in today's final rule requiring that rear visibility systems use color displays as suggested by Sony. To do as Sony suggests would unnecessarily complicate today's rule and the cost of compliance as manufacturers would be required to certify not only that their vehicles have color displays—but color displays that meet a certain minimum standard. We also decline to set a ''real-time video'' performance standard as requested by Rosco for similar reasons. To require manufacturers meet to real-time video performance standards would increase the cost of compliance, while providing no demonstrated increase in safety benefit from the rear visibility systems that we expect manufacturers to be utilizing to meet the requirements of today's rule.

Multistage Vehicles

In its comments, NTEA requested that testing be conducted more on the component level in order to afford the multistage manufacturers maximum flexibility in utilizing different cameras to meet the standard. Further, NTEA requested confirmation that the rear visibility camera would not have to be mounted behind temporarily attached equipment such as a salt or sand spreader which is temporarily mounted to the trailer hitch of a pickup truck.

Agency Response

The agency appreciates the concerns of the multistage manufacturers. We recognize that many of the requirements of today's final rule are dependent on the presentation of the test objects behind the vehicle, through a rear visibility system, in relation to the vehicle and the driver. Since the goals of today's final rule include the driver's ability to view pedestrians within the backing path of his or her vehicle, it is necessary to establish performance requirements in relation to attributes such as the driver eye point and the vehicle rear bumper. Thus, the test procedure adopted by today's final rule inevitably must incorporate various tests on the vehicle level. However, we note that the test procedure in today's final rule prescribes the method by which the agency will conduct compliance testing. Thus, it does not preclude manufacturers (such as multistage vehicle manufacturers) from conducting testing in a different manner as long as the rear visibility system will meet all the requirements of today's rule when installed and tested, by the agency, according to the test procedure described in today's rule.

Finally, we also acknowledge NTEA's concerns that temporary equipment installed by the vehicle owner, such as salt or sand spreaders, may be restricted by today's final rule. However, we note that today's rule does not apply to trailers and other temporary equipment that can be installed by the vehicle owner.

Persons With Disabilities

The K.T. Safety Act directs the agency not only to issue a regulation to reduce death and injury resulting from backover crashes, but to particularly examine crashes involving small children and disabled persons. As described above, the agency examined the FARS and NASS–GES databases to determine whether or not persons with disabilities are frequently involved in backover crashes. While the agency identified various cases in the databases between the years 2007 and 2010 that involved persons with disabilities, the data do not indicate that such persons were frequently involved in backover crashes.

The FARS and NASS–GES data (from 2007–2010) show one case that involves a vision-impaired individual that resulted in a fatality and two cases involving persons in a wheelchair that resulted in injuries. As we noted above, the agency found other cases where the individual was specified as ''impaired'' (1 in FARS, and 11 in NASS–GES). For these cases, the agency is not able to identify whether the person was ''impaired'' due to a physical disability (temporary or otherwise) or due to some other cause. However, even considering all the aforementioned cases, the data suggests (on the whole) that persons with disabilities are infrequently involved in backover crashes.

While the data do not suggest persons with disabilities are frequently involved with backover cases, the agency believes that such persons will benefit from the requirements of today's final rule in a similar way to other pedestrians. While persons using wheelchairs would generally be lower in height when compared to a standing adult, such persons would unlikely be shorter than the 18-month-old toddler (upon which agency has based the 0.8-meter height of its test objects). As described in our discussion of our test objects and field of view requirements in today's final rule, using the 0.8 meter test object located beyond the width of the vehicle (at 5 feet to either side of the vehicle longitudinal centerline) enables the agency to ensure that the 18-month-old toddler will be covered by the required rear visibility system as he/she moves towards the vehicle's longitudinal centerline. The same is true for persons in wheelchairs. As it is highly unlikely that a person in a wheelchair would be shorter than the 0.8 meter test object, the agency believes that such persons would be visible in all the relevant areas behind the vehicle (through the required rear visibility system) that are associated with the highest crash risk.

Similarly, the agency believes that persons with other forms of disabilities will also be visible to a driver using a rear visibility system meeting the requirements of today's final rule. Persons using crutches or other similar mobility aides will also generally be taller than the 0.8-meter test object as these individuals are generally standing when using their mobility aid. Further, vision- or hearing-impaired persons will also be readily visible to the driver using a rear visibility system meeting the requirements of today's final rule as such a person would also be typically standing when located in the relevant areas behind the vehicle.

Further, the available data indicate that persons with disabilities would not move into the vehicle blind zone at a speed that is significantly greater or different than the test speed used by NHTSA in the 2012 research that used a moving obstacle presentation (2.3 mph).[121] In the agency's review of the available research, the agency found various studies that state that persons using wheelchairs generally travel at a speed between 0.96 and 2.42 mph.[122] As the agency does not anticipate that persons with other types of disabilities may move into the vehicle's blind zone at a speed greater than persons using wheelchairs, the agency believes that drivers will be able to use the rear visibility system required by today's final rule to avoid backover crashes with persons with disabilities. Thus, while the data do not indicate that persons with disabilities are frequently involved in backover crashes, the agency believes that the requirements in today's final rule will nonetheless enable drivers to detect and to avoid potential backover crashes that may involve a person with a disability.

Additional Research From IIHS and UMTRI

While the NCAP request for comments and final decision notices are a separate agency action that is independent from the actions taken in today's final rule, various commenters to the NCAP request for comments mentioned additional research that may contain information relevant to this rulemaking action. The first comment was from the Alliance regarding the potential contents of a forthcoming study by the University of Michigan Transportation Research Institute (UMTRI). The second comment was from IIHS on data that they obtained through their Highway Loss Data Institute (HLDI).

Forthcoming UMTRI Study

The Alliance and General Motors both commented to the NCAP request for comments that a forthcoming study from the University of Michigan Transportation Research Institute (UMTRI) examining the effectiveness of rear video systems is likely to be available soon. They asserted that, if the study shows that rearview video systems are already having a significant impact on reducing crashes, then it may not be necessary to include various performance requirements for these systems.

As we stated in the NCAP final decision notice, the agency is encouraged that organizations continue to devote resources to researching backover crashes. Unfortunately, this additional information from the referenced UMTRI study is currently unavailable for analysis. However, the agency believes that the information resulting from this study is unlikely to alter the agency's regulatory decisions in today's final rule. As the commenters suggest, the results of the study may indicate that rearview video systems are already having an effect on reducing backover crashes.

However, even if the results of the study are as the commenters anticipate, the agency believes that minimum performance requirements are still appropriate and necessary in order to ensure that the rear visibility systems installed on vehicles in compliance with FMVSS No. 111 are systems that can assist drivers in avoiding backover crashes. While the currently available systems being equipped on vehicles may already help drivers avoid backover crashes, the available data still indicate that the performance requirements adopted in today's final rule address various conditions under which a poor-performing system could lead to increased backover safety risk. As we noted above in our discussion of SCI cases with rearview video systems, it is important that future systems be designed to show the rearview image to the driver as early as possible so that the driver will be able to see any pedestrian behind the vehicle and avoid the crash.

Further, we believe that minimum performance requirements are necessary—even if current systems meet those requirements. Without performance requirements established in an FMVSS, NHTSA would not be able to ensure that future systems would continue to be effective in helping drivers avoid backover crashes.

IIHS Highway Loss Data Institute Information

Separately, IIHS commented in response to the NCAP request for comments that they support NHTSA's efforts to promote countermeasures that assist drivers in avoiding backover crashes. They also noted that the available data show that rearview video systems greatly increase visibility behind the vehicle and should create a measureable effect on reducing backing crashes. However, they stated that the preliminary data that they have gathered from their Highway Loss Data Institute (HLDI), to date, provide little evidence at this time that these systems are preventing crashes and reducing loss at a measurable rate.[123] We have reviewed the available information from HLDI that shows a lack of a statistical difference in one instance and a statistically significant increase in claims in another instance.[124] However, due to the preliminary nature and the directional inconsistencies in the data, we do not believe that this information should lead the agency to conclude differently on the effectiveness of the available technologies considered in this document.

In their HLDI study, IIHS compared insurance claim frequencies for various categories such as physical damage to the at-fault vehicle (collision coverage)

[121] *See* Docket No. NHTSA–2010–0162–0253, Rearview Video System Use by Drivers of a Sedan in an Unexpected Obstacle Scenario.

[122] *See generally* Tolerico, M.L., Ding, D., Cooper, R.A., Spaeth, D.M., Fitzgerald, S.G., Cooper, R., Kelleher, A., Boninger, M.L., (2007) Assessing mobility characteristics and activity levels of manual wheelchair users, J Rehabil Res Dev. 2007;44(4):561–71; Kaminski, B.A, (2004) Application of a Commercial Datalogger to Electric Powered and Manual Wheelchairs of Children, *available at http://etd.library.pitt.edu/ETD/available/etd-11292004-115314/unrestricted/Thesis2.pdf;* Sonenblum, S.E., Sprigle, S., Lopez, R.A., (2012) Manual Wheelchair Use: Bouts of Mobility in Everyday Life, *available at http://www.hindawi.com/journals/rerp/2012/753165/*; Cooper, R.A., Thorman, T., Cooper, R., Dvorznak, M.J., Fitzgerald, S.G., Ammer W., Guo, S.F., Ph.D., Boninger, M.L., (2002) Driving Characteristics of Electric-Powered Wheelchair Users: How Far, Fast, and Often Do People Drive?, *available at http://www.cs.cmu.edu/~cga/behavior/epw-datalogger.pdf;* Ikeda, H., Mihoshi A., Nomura T., Ishibashi T., (2003) Comparison of Electric and Manual Wheelchairs Using an Electrocardiogram, *available at http://www.union-services.com/aevs/449-452.pdf.*

[123] This apparent inconsistency between the cited substantial increase in rear visibility and the lack of reduction in real world insurance data claims may be associated with a few potential factors. First, there is a limited amount of insurance data due to these systems being relatively new. Second, these crashes are a relatively small proportion of the overall vehicle claims. Finally, the study considers data beyond backover crash data. This comparison may contain confounding factors that do not reduce the utility of this information for the purposes of IIHS, but it does not contain information specific enough for make conclusions about rearview video systems for the purposes of this analysis.

[124] Bulletin Vol. 28, No. 13: December 2011 and Bulletin Vol. 29, No. 7: April 2012

and physical damage to a struck vehicle or property (property damage liability coverage). This study focused on select Mazda and Mercedes-Benz vehicle models with and without rearview video systems. In general, they stated that, for these models, they did not observe statistically significant reductions in claim frequencies and in some cases found that cars with cameras had increased claims.[125] For example, in their analysis of crash data for Mercedes-Benz vehicles (a more robust data set than the analysis of the Mazda vehicles[126]) with and without rearview video systems, IIHS did not find a statistically significant difference in any of the claim frequencies (which may be partially attributable to the data's wide confidence interval). In addition, the authors of the study of Mercedes-Benz vehicles noted that the transmission status was unknown (i.e., whether the vehicle was in reverse or not). Thus, for those vehicles, all crash types were considered—including those for which rearview video systems cannot be reasonably expected to prevent.[127]

The agency understands that the types of crashes contemplated by Congress in the K.T. Safety Act (backover crashes) occur much less frequently than all property damage crashes. This makes it more difficult to find statistical significance using the Highway Loss Data Institute methodology. As IIHS stated in their comments, this data is still preliminary data. Further, this data is not designed to isolate the effect of rearview video systems on the specific type of crashes that we are addressing in this document—backover crashes. Thus, when considering these studies as well as the other available studies completed by NHTSA and other organizations, including all the limitations within the methodologies, the data continue to show that the installation of rear visibility systems meeting the requirements of today's final rule will decrease the risk of pedestrian backover crashes. However, with more data, the HLDI methodology may be valuable in the future for examining the overall effect of rearview video systems.

m. Effective Date

Section 30111(d) of title 49, United States Code, provides that a Federal motor vehicle safety standard may not become effective before the 180th day after the standard is prescribed or later than one year after it is prescribed except when a different effective date is, for good cause shown, in the public interest. Pursuant to the K.T. Safety Act (requiring that the agency establish a phase-in schedule with a full compliance date no later than 48 months after this final rule is issued), today's final rule requires compliance in accordance with a phase-in schedule. This schedule establishes May 1, 2016 as the first compliance date with full compliance being required by May 1, 2018. For the reasons mentioned in our discussion of the phase-in, above, the agency believes that there is good cause and it is in the public interest to use the aforementioned phase-in schedule. The agency believes that the phase-in schedule contained in today's final rule affords the manufacturers an appropriate amount of time to meet the phase-in production targets and achieve full compliance by May 1, 2018.

IV. Estimated Costs and Benefits

Based on the data from FARS, NASS–GES, and NiTS, NHTSA estimates that backing crashes result in 410 fatalities and 42,000 injuries annually. Of these backing crashes, backover crashes (which involve a vehicle striking a non-occupant of the vehicle) contribute to an estimated 267 fatalities and about 15,000 injuries[128] annually. However, backover crashes involving vehicles with a GVWR of under 10,000 pounds account for an estimated 210 fatalities and 15,000 injuries annually.

a. System Effectiveness

As we mentioned in the NPRM, three factors must be present for a rear visibility system to avoid a backover crash and thereby provide a safety or other benefit. We have designated these factors F_A, F_S, and F_{DR}. In the agency's estimates regarding the effectiveness of the countermeasure required by today's final rule, we combine all three of these factors in order to determine the impact that countermeasures meeting the requirements of today's final rule will have in preventing backover crashes.

Defining Factors F_A, F_S, and F_{DR}

The first factor is designated as factor F_A. This factor examines whether or not the crash is one that is ''avoidable'' through the use of the device. In this factor, the pedestrian must be within the target range (i.e., design range) for the sensor, or the viewable area of the camera or mirror. In other words, the details and geometric parameters of the specific crash scenario must be such that (assuming perfect system function and driver use) the crash would be avoidable. In summary, factor F_A separates the avoidable crash scenarios from the unavoidable crash scenarios.

The second factor is designated as factor F_S. This factor assesses whether or not the system will detect the presence of a pedestrian behind the vehicle and output the appropriate visual display or otherwise warn the driver. This factor assumes that the pedestrian is within the system's design range and that the driver will react appropriately to the warning. In other words, this factor asks whether or not the device will successfully detect the pedestrian that is located within the range that the device is designed to detect. Thus, this factor assumes that the crash is an avoidable crash in factor F_A and assumes that the driver will react in the appropriate manner to avoid the backover crash.

Finally, the third factor is designated as F_{DR}. This factor examines whether or not (given that the crash is avoidable in F_A, and that the system has detected the pedestrian in F_S) the driver will be able to successfully use the technology in order to avoid the backover crash. In this factor, the driver must both perceive the information presented by the rear visibility system and respond appropriately before impact with the pedestrian. Thus, this factor evaluates the ability of drivers to use the rear visibility system that has detected a pedestrian in an avoidable crash situation.

Estimating F_A, F_S, and F_{DR} and Total Rear Visibility System Effectiveness

As the rear visibility systems under today's final rule are required to display an image of the area behind the vehicle to the driver, such systems will convey information to the driver regarding obstacles behind the vehicle (that are within its design detection range) 100% of the time. Thus, for the purposes of estimating the effectiveness of the rear visibility systems required under today's final rule, F_S is 100% and the relevant factors for discussion, are F_A and F_{DR}.

[125] For Mazda vehicles ''the only significant effect on claim frequency was a paradoxical increase in collision claims. There was also a decrease in high-severity claims for bodily injury, suggesting a reduction in collisions with nonoccupants.'' For Mercedes vehicles there were no statistically significant changes in any of the five insurance coverage types.

[126] Mercedes vehicles had four times as many insured vehicle years in the database as Mazda vehicles.

[127] A more detailed discussion of these studies is available in the Final Regulatory Impact Analysis—available in the docket referenced at the beginning of this document.

[128] Due to rounding, injuries for light vehicles and all vehicles are estimated to be 15,000.

In order to determine F_A, the agency conducted a study that reviewed 50 SCI cases that were available at the time of the study. The purpose of this study was to analyze whether or not the specific crash occurred at a location that is within the zone that a given countermeasure was designed to detect.[129] In other words, the study sought to identify the crashes in the 50 SCI cases studied that would have been avoidable by the driver—assuming an ideal (or perfect) driver response. This factor takes into consideration the fact that, even when a rear visibility system warns the driver regarding a potential backover crash and the driver reacts appropriately to the warning, the physics and geometric parameters of the particular situation may not allow for the backover crash to be avoided. In order to determine whether or not each SCI case would have been avoidable using a rear visibility system, the study considered factors such as the movement of the pedestrian (e.g., direction, speed), whether or not the pedestrian would have been visible to the driver using the rear visibility system, the general trajectory and speed of the vehicle etc. The study found that between 76% and 90% of the cases reviewed would have been avoidable cases using rear visibility systems meeting the requirements in today's final rule.[130]

In order to determine F_{DR}, the agency performed research by presenting an unexpected test object (with an image of a child pedestrian affixed to the test object) to drivers that were executing backing maneuvers. These studies examined the likelihood that the driver will react to the information from the rear visibility system sufficiently so as to avoid the crash by controlling test conditions such that the test object would always be presented in a location and in a manner where the rear visibility system would detect the test object (and inform the driver of the presence of the object). The agency conducted four separate studies (designated in this discussion as Studies 1, 2, 3, 4a, and 4b) since 2008 to examine the ability of drivers to avoid backover crashes when utilizing rear visibility systems.[131] Through these studies, the agency observed drivers (with various demographic characteristics) utilizing different rear visibility systems and different vehicle types when subject to different test object presentation methods. By carefully selecting the test parameters to be changed from one iteration of the study to the next, the agency is able to use these data to arrive at a reasonable estimate of drivers' ability to utilize rear visibility systems required under today's rule while also ensuring that potential variations (such as driver and vehicle type) in real-world circumstances will not have an unanticipated impact on the agency's estimates. The general parameters and results of the four studies are presented in the table below:

TABLE 12—NHTSA RESEARCH ON DRIVER USE OF REAR VISIBILITY SYSTEMS

	Study 1 (2008) 2007 Honda Odyssey & Study 2 (2009) 2007 Honda Odyssey		Study 3 (2010) 2007 Honda Odyssey		Study 4a (2012) 2012 Nissan Altima		Study 4b (2012) 2012 Nissan Altima	
Obstacle:	Centered op-Up		Centered Pop-Up		Centered Pop-Up		Laterally Moving	
Test Setting:	Laboratory Garage/Parking Lot		Daycare Garage/Parking Lot		Laboratory Garage/Parking Lot		Laboratory Garage/Parking Lot	
	N	% Crashes	N	% Crashes	N	% Crashes	N	% Crashes
Baseline (No System)	12	100	36	100			56	91
RV, 7.8″, in-dash	12	58	36	61				
RV 4.25″, in-dash					36	67	51	69
RV, 3.5″ in-mirror	10	30	23	52				

This table shows the basic information for each of the four studies conducted by the agency. In this table, ''N'' represents the number of participants for each test condition and the percentage of those participants that crashed is shown. For the baseline condition, no rearview video system was installed on the vehicle, while the size and location of the display is shown in each of the other conditions.

By observing drivers under these various conditions, the agency believes that a reasonable estimate for F_{DR} can be obtained for the rear visibility systems required by today's final rule. In each of the agency's tests, participants performed backing maneuvers either with or without a rear visibility system. Regardless of the specific conditions used in the particular test (e.g., driver/vehicle type, obstacle presentation, etc.), drivers with rearview video systems were consistently able to avoid crashes with the test object at a rate that is statistically greater than drivers without any rear visibility system.

As described above, the original research referenced in the NPRM (Studies 1 and 2 conducted in 2008 and 2009, respectively) utilized a Honda Odyssey as the test vehicle and tested the ability of drivers to avoid a pop-up test object located in the vehicle's blind zone. This research included participants age 25 to 55 and a mixture of male and female drivers. The research revealed that, while drivers were universally unable to avoid crashes with the test object without a rear visibility system, the drivers were able to avoid a crash with the pop-up test object approximately 55% of the time with a rearview video system.[132] While the research referenced in the NPRM

[129] For further information, please reference the Final Regulatory Impact Analysis prepared in support of this final rule, available in the docket number referenced at the beginning of this document.

[130] The agency decided to use the SCI cases to perform this analysis due to the level of detail required in order to analyze whether or not the totality of the facts would suggest that a case could have been avoided with a rear visibility system. The agency is not aware of any other source of information that could provide the same level of detail about crashes that would enable the agency determine circumstances of the crash such as the general trajectory/speed of both the pedestrian and the backing vehicle. The agency believes it is reasonable to use the results of this study to estimate F_A in this instance.

[131] *See* Docket No. NHTSA–2010–0162–0253, Rearview Video System Use by Drivers of a Sedan in an Unexpected Obstacle Scenario.

[132] 75 FR 76228.

accurately and effectively isolated the incremental benefit of the rearview video system over a uniform set of conditions (e.g., vehicle model, obstacle presentation, and driver demographics), NHTSA considered other research in conjunction with the information referenced in the NPRM in order to enhance the robustness of our analysis for the purposes of today's final rule. Although this additional research refines the agency's estimates of the potential benefits of the rear visibility systems required under today's final rule, the additional research does not alter the agency's decision.

In considering the subsequent research, the agency aimed to investigate whether or not a different test setting, a different vehicle type, different driver demographics, and a different obstacle presentation method would lead to an unanticipated effect on the agency's previous estimates on drivers' ability to utilize rear visibility systems to avoid a backover crash. In other words, the agency examined the available data from the additional studies to determine if there was any evidence that the aforementioned factors could lead to a statistically different test result.

In order to examine whether or not drivers would utilize rear visibility systems differently in a setting where drivers may expect the presence of children, the agency examined data from an additional study that was conducted in a day care center parking lot (Study 3 conducted in 2010).[133] This study showed that, given the same vehicle, driver demographic, and obstacle presentation parameters, the new setting (the day care center) did not influence drivers to avoid or crash with the test object at a statistically different rate.

The agency also conducted additional studies in 2012 (Studies 4a and 4b) where the agency utilized an additional vehicle model (the Nissan Altima) and expanded driver demographics (including a more balanced distribution of male and female participants [134] and including participants under age 25 and over age 55). The 2012 research contained two parts in order to enable the agency to examine whether or not the test object presentation method would lead to statistically different driver performance results. As discussed above, the two studies did not indicate that the expanded driver and vehicle types or the different obstacle presentation method caused drivers to avoid a crash with the test object at a statistically different rate.[135]

As the additional research examined by the agency since the NPRM did not indicate that the additional test parameters created statistically different results, the agency decided to incorporate the new data as additional data points in calculating its estimate of F_{DR}. In other words, to perform an analysis of the driver's ability to avoid a backover crash using rear visibility systems required by today's final rule, the participants from Studies 3, 4a, and 4b were combined with NHTSA's previous studies (Studies 1 and 2) as additional test participants in order to expand the total number of participants examined. The agency believes this is a reasonable approach as the agency was not able to find a statistical difference between these test participants and increasing the number of participants considered in NHTSA's analysis will increase the overall robustness of NHTSA's estimates regarding the ability of drivers to avoid a backover crash when using the rear visibility systems required by today's final rule.[136] When considering the data from these studies, the agency estimates that F_{DR} is 37%. In other words, 37% of the time, drivers would be able to avoid a backover crash when utilizing a rear visibility system meeting the requirements of today's final rule when the crash is an avoidable crash (under F_A).[137]

On the basis of the agency's research into these three factors, the agency believes that the rear visibility systems required under today's final rule will have a predicted effectiveness of between 28 and 33 percent. Below is a table showing the aforementioned effectiveness factors and the estimated system effectiveness for each of the regulatory alternatives considered during the rulemaking process. As mentioned above, these effectiveness estimates differ from the NPRM because the agency has incorporated the new information obtained from the tests performed at the day care center parking lot and NHTSA's subsequent study that utilized a Nissan Altima along with the pop-up test object presentation.[138] While the NPRM was unable to include these updated numbers for the tests performed at the day care center (Study 3) in its analysis, the NPRM referenced this material and NHTSA included it in the NPRM docket.[139]

[133] *See* Docket No. NHTSA–2010–0162–0001, Drivers' Use of Rearview Video and Sensor-Based Backing Aid Systems in a Non-Laboratory Setting.

[134] While the agency sought to more evenly balance the gender distribution in its 2012 study, the information from NHTSA's previous studies indicate that male and female drivers did not crash with the pop-up test object behind the vehicle at statistically different rates. In Studies 1–3, male drivers crashed 77.8% of the tests whereas female drivers crashed 75.5% of the tests.

[135] *See* Section II, g. *Additional 2012 Research, supra.* As we noted previously, testing additional participants may have enabled the agency to observe statistically different results for some of these new test parameters (e.g., age). The raw results of the data in Study 4 (*See* Docket No. NHTSA–2010–0162–0253) show that drivers older than 55 and younger than 25 did crash with the unexpected test object more frequently than drivers between age 25 and 55. (We did not test different age groups in Studies 1–3 because we did not anticipate that there would be a difference across age groups). However, the data do not show that these differences were statistically significant. While testing additional participants may have revealed a statistically significant difference, the agency was unable to identify more participants (that are familiar with the vehicle model and the technology) for this study.

[136] While we acknowledge that the tests conducted in Study 4b used a different object presentation method, we believe that these results can be included and analyzed in conjunction with Studies 1, 2, 3, and 4a. As we described above in our discussion of the research, we designed the moving test object presentation method with test parameters that were as close to the pop-up test object presentation method as possible (e.g., exposure time of the object in the rearview image). We reasoned that this approach would enable both presentation methods to mimic the same types of crash scenarios that we believe are the most prevalent (i.e., scenarios where the driver reacts to the unexpected presence of a pedestrian behind the vehicle). As these methods were designed with similar parameters, were design to mimic the same crash scenarios, and did not yield a statistically significant difference, we believe it's appropriate to incorporate Study 4b in our analysis of F_{DR}. We note that some participants were able to avoid a collision with the moving test object in the baseline (no rearview video system) condition in Study 4b. We have taken this baseline condition into account when calculating the effectiveness of rearview video systems in the moving test object presentation method.

[137] All the available data continue to indicate that rear visibility systems meeting the requirements of today's final rule (e.g., rearview video systems) would be the best technology that can address the backover safety concern that Congress directed the agency to address. Separate from our aforementioned concern that Study 4b lacks a clear method for isolating the incremental effect of the rearview video system, the agency is also not aware of any method of incorporating the data from Study 4b (in analyzing F_{DR}) that would produce a total system effectiveness for rearview video systems that would be inferior to any of the other available countermeasure technologies. Thus, while the agency believes that it is not appropriate to incorporate the data from Study 4b into its analysis of F_{DR}, the agency notes that it is unaware of any method of incorporating the data from Study 4b that would provide a rational basis for the agency to alter its decisions in today's final rule.

[138] *See* Docket No. NHTSA–2010–0162–0001.

[139] *See* Docket No. NHTSA–2010–0162–0001.

[140] In NHTSA's sensor system tests, one vehicle model was able to detect our plastic test object placed in the test location 100% of the time. The other detected the same test object in the same location approximately 40% of the time. By combining the number of trials for both vehicle models and the number of positive alerts for both vehicle models the agency roughly estimates that sensor systems will detect objects within their designed detection zone 84% of the time. However, the agency believes that this figure may represent the sensor system's performance under idealized conditions. As the primary purpose of these studies were to determine the ability of the driver to react to the output information from either a sensor or

TABLE 13—ESTIMATED SYSTEM EFFECTIVENESS

[In percents]

System	Final effectiveness	F_A	F_S	F_{DR}
180° RV	33	90	100	37
130° RV	28	76	100	37
Ultrasonic	8	49	* * * 84	18
Radar	8	54	* * * 84	18
Rear-Mounted Convex Mirrors	0	33 *	100	0 **

* F_A for mirrors is taken from a separate source due to lack of inclusion in the SCI case review that generated F_A for cameras and sensors.

** F_{DR} for mirrors is taken from a small sample size of 20 tests. It is 0% because throughout testing, drivers did not take advantage of either cross-view or lookdown mirrors to avoid the obstacle in the test.

* * * F_S for sensors was obtained from the agency's tests regarding the driver's ability to utilize sensor systems to avoid a backover crash with a test object. Thus, this figure involves the sensors' ability to detect the test object under idealized conditions.[140]

b. Benefits

On the basis of its application of the predicted effectiveness of the rear visibility systems that can be utilized to satisfy the requirements of today's final rule to the annual target population of 210 fatalities and 15,000 injuries, the agency estimates that the requirements of today's final rule will save between 13 and 15 lives per year and prevent between 1,125 and 1,332 injuries per year.[141] These updated estimates are lower than the estimates in the NPRM for a few reasons. First, the updated estimates account for the increased market penetration of rearview video systems since the publication of the NPRM[142] and the projected market penetration as a result of voluntary adoption of rear visibility systems through the year 2018. Second, the estimates take into account new data that has revised the size of the target population. Finally, the estimates have been revised based on new information available regarding the effectiveness of the rear visibility systems required under today's final rule. While this new information refines the agency's ability to better assess the costs and benefits of the countermeasure required in today's rule, the available data continue to indicate that rear visibility systems meeting the requirements of today's final rule are the most effective countermeasure for addressing the backover crashes contemplated by Congress in the K.T. Safety Act.

As further discussed in the sections that follow, the agency is aware that rear visibility systems are being adopted in the market. This adoption by the industry of rear visibility systems is estimated and accounted for in our analysis of the costs and benefits of today's final rule. However, the safety benefits that would be realized from these rear visibility systems are not included as benefits in this section because they do not result from the vehicles that are not projected to have rear visibility systems by 2018.

For the purposes of our analysis, we have assumed that the benefit of installing a rear visibility system is the same for each vehicle. Therefore, the voluntary adoption of rear visibility systems due to market factors create a proportional decline in both costs and benefits attributable to today's rule. As the agency is not aware of any data to indicate whether the vehicles voluntarily installed with rear visibility systems have a higher or lower risk of being involved in a backover crash, we have used this assumption in our analysis.

TABLE 14—ESTIMATED ANNUAL QUANTIFIABLE BENEFITS

Benefits	
Fatalities Reduced	13 to 15.
Injuries Reduced	1,125 to 1,332.

Beyond avoiding injuries and fatalities, the agency expects that benefits will accrue over the life of the vehicle as a result of avoiding property damage. While damage to rear visibility systems are a potential source of additional repair cost as a result of rear-end collisions, the agency calculates that these costs will be offset by the benefits realized by vehicle owners as a result of avoiding property damage only backing collisions. Across the 3 and 7 percent discount level (over the lifetime of the vehicle), the agency expects the net impact of rear visibility systems on property damage only crashes is a net benefit which ranges between $10 and $13 per vehicle.[143]

In addition to these quantifiable benefits, the agency continues to believe that today's final rule will contribute significantly toward achieving many unquantifiable benefits. NHTSA believes that a simple quantitative analysis is not sufficient when evaluating the benefits of this rulemaking. We note that Executive Order 12866 (reaffirmed by Executive Order 13563) refers expressly to considerations of equity by directing that agencies, ''choosing among alternative regulatory approaches . . . should select those approaches that maximize net benefits (including . . . equity).'' Executive Order 13563 explicitly states not only that each agency shall ''use the best available techniques to quantify anticipated present and future benefits and costs as

rearview video system, the test object was not designed with properties such as motion and material in mind. As discussed in Section III, c. *Alternative Countermeasures, supra,* various technical limitations on the sensors ability to detect objects within its design detection range suggest that the ability of the sensor system to detect a child may not be similar to the sensor system's ability to detect a plastic test object.

[141] In order to compare the annual costs of equipping the fleet to the benefits that can be realized from the equipped fleet, these estimates reflect the number of lives that can be saved annually once the full fleet of vehicles operating have been equipped with the rear visibility systems required by today's final rule. We anticipate that the number of vehicles with this safety equipment will rise steadily and be in all vehicles operated on the public roads by 2054. It also does not count any benefits that would be attributable to systems that the manufacturers are already installing on their vehicles prior to the first full year of mandatory full compliance (2018).

[142] While Model Year (MY) 2014 sales are not yet complete, the agency has information on the models that will offer rearview video systems as standard or optional equipment. When comparing this information to the sales projections and historic sales trends for each model, we are able to determine that approximately 57% of MY2014 vehicles will have rearview video systems. Further, if the sales trend after MY2014 continues to follow the historic sales trend, we anticipate that 73% of MY2018 vehicles will have rearview video systems. We discuss this issue further in the sections that follow and additional details about our projections are in the Final Regulatory Impact Analysis available in the docket referenced at the beginning of this document.

[143] *See* Final Regulatory Impact Analysis, available in the docket number referenced at the beginning of this document.

accurately as possible,'' but also that each agency ''may consider (and discuss qualitatively) values that are difficult or impossible to quantify, including equity, human dignity, fairness, and distributive impacts.''

These values—especially equity, fairness, and distributive impacts—are directly relevant to this final rule. There are strong reasons, grounded in unquantifiable considerations, to take action to prevent the deaths and injuries at issue here, including:

(1) We believe it is important to reduce the risk that drivers will be the direct cause of the death or injury of a person, particularly a small child at one's own place of residence or that of a relative or close friend. In many cases, parents are responsible for the deaths of their own children. We continue to believe that avoiding that horrible outcome is a significant benefit which is not fully or adequately captured in the traditional measure of the value of a statistical life. Of course, any death of a young child is a tragedy, but we believe that this traditional measure also does not adequately account for the value of reducing the risk that parents will be responsible for the death of or serious injury to their own children.

(2) We noted that 37 percent of the deaths and 7 percent of the injuries at issue here involve young children (under the age of five), and there is an important social interest in avoiding such deaths and injuries. While the agency has used the Department's standard monetary figure for the value of a statistical life, we acknowledge that various studies have placed the value of a statistical life at a higher value and the value of a statistical life of a child even higher. However, we note that the literature is in a state of development.

(3) The victims of the relevant crashes here include not only children but also people with disabilities and the elderly. Especially in the context at issue, such people lack relevant control over the situation and are not in a good position to protect themselves. There are strong considerations, rooted in fairness and equity, to reduce these risks that they face.

(4) The focus of the benefits analysis is on the prevention of deaths and injuries, and the avoidance of property damage, but the requirements of the rule will also provide a range of additional benefits. Drivers will benefit in numerous ways from increases in rear visibility. For example, parking will be simplified, especially in congestion. The evolution of the automobile market attests to these benefits. The agency believes that apart from the monetized values, increase in ease and convenience will provide significant, but not yet quantifiable, benefits to drivers.

c. Costs

The agency estimates that to equip each vehicle with a rear visibility system compliant with the requirements of today's final rule will cost between $132 and $142 per vehicle. For vehicles already equipped with a suitable display, the incremental cost of equipping the vehicle with a compliant rear visibility system is estimated to be $43 to $45. Given these per unit costs (and the current state of the market), the agency estimates that the cost to equip the entire fleet of new passenger vehicles sold annually (estimated at 16.0 million vehicles) with rear visibility systems meeting the requirements of today's final rule is between $546 and $620 million.[144]

These cost estimates differ from those in the NPRM, where the agency estimated that rearview video systems would cost between $159 and $203 for each vehicle not already equipped with a suitable display unit, $58 for each vehicle that was already equipped with a suitable display unit, and a total fleet cost of $1.9 billion to $2.7 billion annually.[145] In response to these estimates, the agency received comments from both equipment manufacturers and advocacy groups stating that the agency had overestimated the potential costs of these systems.[146] Specifically, both the Advocates and the American Academy of Pediatrics commented that the agency did not sufficiently estimate the potential reduction of costs for rearview video systems over time as manufacturers of such products gain experience in producing these systems. In addition, Sony and Magna commented that they expect that manufacturers will realize significant cost reductions through increased production levels and refinements in the manufacturing process. Further, Sony commented that voluntary adoption of this technology will conservatively double by 2013—even absent a final rule.

Thus, in response to these comments, the agency reexamined the cost estimates of the NPRM in order to obtain more accurate estimates regarding the annual costs of today's final rule. As the first year requiring full compliance with today's final rule is 2018, the agency has used the following information in order to more accurately predict the costs of today's rule in 2018.

First, the agency conducted a teardown analyses of representative rearview video systems which afforded updated cost estimates for individual rearview video systems that would meet the requirements of today's rule.[147]

Second, the agency also took a closer look at the rate of voluntary adoption of rear visibility systems through 2018. While the agency agrees with Sony that (even absent today's rule) rear visibility systems will experience increased market penetration, we did not rely on Sony's assertion that rearview video systems will increase two-fold by 2013. Instead, the agency took a different approach of basing its projections of the voluntary adoption of rearview video systems in 2018 on a combination of the data on the historical adoption trend for these systems and the agency's information on the vehicle models that will have rearview video systems in Model Year (MY) 2014. While MY2014 sales are not yet complete, we have information on the models that will offer these systems (either as standard or optional equipment). When we combine this information with the sales projections for each model, we are able to determine that approximately 57% of MY2014 vehicles will have rearview video systems. Further, if the sales trend after MY2014 continues to follow the historic sales trend, we anticipate that 73% of MY2018 vehicles will have rearview video systems.[148] We discuss this issue further in the sections that follow.

Finally, the agency also agrees with the commenters that manufacturers will realize cost reductions through increased familiarity with the manufacturing process and through economies of scale. However, because the agency did not receive any detailed information from the commenters regarding the extent of these particular possible cost savings, the agency has applied a general learning factor (based

[144] These costs do not include costs attributable to systems that will already be installed by vehicle manufacturers prior to 2018.

[145] 75 FR 76236. This estimate assumed a market adoption rate of 19.8% (across the fleet) prior to a final rule. $1.9 to $2.7 billion is the range of costs for rearview video systems only (does not include the cost range for sensor systems).

[146] Conversely, we note that the agency did not receive any substantial comment stating that the agency had overestimated the per unit price. We did receive comments from vehicle manufacturers that our phase-in schedule would create additional design/development costs for the industry and we believe we have accommodated these concerns through adjusting the phase-in requirements in today's final rule. However, those comments did not address the long-term per-unit costs that we use to calculate the costs of today's rule.

[147] *See* Final Regulatory Impact Analysis, available in the docket number referenced at the beginning of this document.

[148] *See id.*

on historic data on the adoption of automotive safety technologies [149]) to the information received from the teardown study. Using a constant learning factor (a 7% cost savings) over each cumulative doubling of production, the agency obtained what it believes is a more accurate estimate of the potential cost of rearview video systems in 2018.[150] Using this learning analysis method, the agency predicts that the per-unit costs in 2018 will be between $132 and $142 per vehicle (and $43-$45 per vehicle for vehicles that already have a suitable screen).

Using the aforementioned information (the new teardown study, the new adoption rate, and the new per-unit cost after learning), the agency estimates that the cost to equip the entire fleet of new passenger vehicles sold annually with rear visibility systems meeting the requirements of today's final rule is between $546 and $620 million.

TABLE 15—ESTIMATED INSTALLATION COSTS

Costs (2010 $)	
Full system installation per vehicle.	$132 to $142.
Camera-only installation per vehicle.	$43 to $45.
Total Fleet	$546 M to $620 M.

While the agency agrees with the commenters and conducted the aforementioned analyses to refine its estimates of the actual costs of today's final rule, the agency notes that these updated cost estimates do not affect any of the agency decisions regarding the requirements in today's final rule. The agency continues to believe that the requirements we've adopted in today's final rule are the only effective way of fulfilling the requirements of the K.T. Safety Act.

Separately, in estimating the above costs, the agency did not include ultrasonic or other rear sensor systems as part of the analyses because the systems examined by NHTSA are not able to meet the requirements of today's final rule. However, the agency did conduct a teardown analyses for ultrasonic sensor systems and found these systems to be much more expensive than the agency had previously estimated. In the NPRM, the estimated costs of various rear object sensor systems ranged between $52 and $92 to equip each vehicle. After conducting the teardown analyses and applying the learning factor, the agency now estimates that to equip each vehicle with ultrasonic systems would cost between $79 and $138.

d. Market Adoption Rate

In order to estimate the likely benefits and costs of this regulation, NHTSA has considered different methods for establishing a baseline market adoption rate of rear visibility systems against which to measure the effects of the regulation. Applying OMB Circular A–4, a baseline(s) would reflect ''what the world would look like'' in the absence of regulation.

Towards this end, the above sections measure the impact of equipping the vehicles that are not projected to have rear visibility systems by 2018. Thus, we have projected (based on the available data) what the market adoption of rear visibility systems would be by 2018 (the 100% compliance date in the phase-in schedule established by today's final rule). By comparing this projection to 100% compliance in 2018, our analysis shows the costs and benefits that are attributable to those remaining vehicles. The data indicate that many vehicle models are already being sold with rear visibility systems as standard or optional equipment. As described above, NHTSA projects that 73% of new light-duty vehicles will be sold with rear visibility systems by 2018.

However, calculating the costs and benefits based only on these vehicles that would not have rear visibility systems by 2018 does not account for other potential events that could affect market adoption. It is possible that some of the projected 73% market adoption in 2018 is attributable to events that are beyond ''pure market forces'' (e.g., the K.T. Safety Act and the rulemaking process). However, it is difficult to know with any certainty how many of these vehicles would be so equipped in the absence of this regulation, the rulemaking process, and the K.T. Safety Act. In other words, how much of the increase in the popularity of these systems is driven purely by market forces and how much is the result of manufacturers acting in anticipation of the regulation taking effect?

For several reasons NHTSA believes market forces are responsible for the majority of the recent increase in the number of rearview video systems projected to be installed by MY 2018. Typically, the market forces that lead to a surge in popularity of a technology are a decline in their cost and/or an increase in consumer demand. There is strong evidence that both of these factors are affecting the adoption of cameras in light-duty vehicles. For example, the increasing popularity of other features that require screens (such as navigation and infotainment systems) has significantly reduced the incremental cost of adding a video system since the screen is already there. It is also likely that consumers are beginning to better appreciate the value of such systems for safety reasons as well as their value to assist parking.

At the same time, NHTSA cannot rule out the possibility that some of the recent increase in projected future installations is due to manufacturers' anticipation of the regulation and would not be in the fleet were it not for the statutory requirement that NHTSA issue a regulation. If manufacturers believe that a regulation is imminent and they are in the process of redesigning models, they may add rear video systems now because it is usually less costly to integrate new features at the vehicle-redesign stage than at other times.

However, there is reason to believe that this factor has been less important than market forces. For example, some manufacturers have begun offering rear video systems in models before the normal re-design cycle. Such sales growth is more likely reflective of market forces rather than regulation. In addition, at least one major car manufacturer, Honda, had already in 2013 made rear-visibility cameras a standard feature in 94% of its vehicles. The fact that automakers have greatly increased the output of cars with rearview video systems suggests the demand for those devices is largely consumer driven and perhaps bound up with consumers' desire for the convenience of such cameras as well as their safety benefits. Additional evidence that adoption is market driven is that sales of aftermarket rear visibility kits that customers themselves install, despite being under no possible regulatory mandate to do so, are projected by industry sources to grow very rapidly.[151] The advertising of rearview video systems as a safety feature by several manufacturers has

[149] The agency examined the historical data for the following automotive safety technologies: driver air bags, antilock braking systems, manual lap/shoulder belts, adjustable head restraints, dual master brake cylinders. *See* ''Preliminary Regulatory Impact Analysis, Corporate Average Fuel Economy for MY2017–MY2025 Passenger Cars and Light Trucks'', November 2011, Docket No. 2010–0131–0167, (discussing our analysis of the learning curve discussion on pages 577–591).

[150] For additional information regarding the method that the agency used to calculate the cost savings over time due to learning, please reference the Final Regulatory Impact Analysis, available in the docket number referenced at the beginning of this document.

[151] CE Outlook, ''Backup Camera Sales to Near Double,'' 2/21/2012.

likely fueled further consumer demand for these devices.

In addition, we believe that now that rear visibility cameras have become a common safety device on many models, manufacturers may have some concern that they face potential tort liability if they market models that do not offer this safety feature. Finally, we note that once a manufacturer has designed a vehicle model to include a rearview video system, regardless of the motivation for that action, a variety of considerations, including consumer expectations and product liability, will preclude the possibility of the manufacturer's ceasing to offer cameras in future model years vehicles. In other words, those are costs that the industry have already incorporated into their production plans and thus are not affected by this rulemaking action.

Given the above, NHTSA finds substantial evidence that market forces are driving the increase in the rate of adoption of rearview video systems, but is unable to determine with any reasonable certainty the precise extent to which the prospect of regulation might also be a factor. Thus, in order to reflect this uncertainty about how to attribute the existing market adoption rate, we have conducted an additional analysis that presents a range of both the benefits and costs of this rule. In developing this analysis we are attempting to estimate the range of adoption of rear visibility systems which might have occurred by 2018 if Congress had not passed the K.T. Safety Act, NHTSA did not initiate a rulemaking on this subject, and no final rule were adopted.

At the top-end of this range, we adopt the assumption that *all* current and projected installations are due purely to market forces and that none are due to the rule. We recognize that this is a strong assumption, but we think that in light of the evidence discussed above it is a reasonable one on which to base an upper bound of the range of projected adoption levels. As noted above, our latest projection shows that 73% of the new vehicle fleet will be equipped with rearview video systems by 2018. We based this calculation on data on the historical adoption trend of these systems and the agency's information on which vehicle models will have these systems in MY2014. Using both historical sales data and the information the agency has about the vehicle models that will have rearview video systems as standard or optional equipment in 2014, NHTSA is able to estimate that approximately 57% of MY2014 vehicles will have rearview video systems. Then, if the sales trend after MY2014 continues to follow the historic sales trend established up to and including 2012 and we assume that this is all attributable to market forces (and none to the rule), we obtain a 73% baseline MY2018 rate of adoption rearview video systems.[152]

At the low-end of the range, we adopt the assumption that *half* of the increase in the market adoption trend as a result of the data from MY2014 is attributable to ''pure market forces'' and half is not. In other words, we make the following two assumptions for this low end estimate: (1) That the MY2008 to MY2012 historic adoption trend represents ''pure market forces'' and that this trend would have continued apart from the K.T. Safety Act and NHTSA's rulemaking process in response to the Act; and (2) that half of the difference between that continuation of the MY2008 to MY2012 trend (through to 2018) and our top end of the range estimate (that produces a 73% market adoption rate in 2018) represents a shift in ''pure market forces.'' We believe these assumptions are appropriate as a low end of the range estimate because we believe it is unlikely that *none* of the projected increase in installation for MY2014 (and beyond) are due to market forces (i.e., that all is due to anticipation of the rule). However, in the case of this rulemaking, the available information does not enable the agency to make any reliable determinations as to what portion of the market adoption (between our top and low end estimates) is due to ''pure market forces'' as opposed to other factors. As discussed above, we think the evidence supports ascribing a substantial majority of the increased adoption rate to market forces. Thus, we believe that the top and low-end estimates described above both represent somewhat strong assumptions and sufficiently capture the uncertainty surrounding what portion of the market adoption is attributable to ''pure market forces.''

Thus, in addition to reporting our data on the market adoption in MY2014 and our projections for 2018, this analysis considers what the costs and benefits (the effect) of the rule, the rulemaking process, and the K.T. Safety Act are. Using the top and low end estimated adoption trends described above, we believe that the market adoption in 2018 would be between 59% and 73%. Assuming this range of market adoption, we believe that $546 million to $924 million in costs and $265 million to $595 million in monetized benefits are attributable to today's final rule, the rulemaking process, and the K.T. Safety Act.[153]

e. Net Impact

Table 16 below presents the lifetime monetized benefits, lifetime costs, and presents their difference—the net impact. The table monetizes the aforementioned installation costs and fatality/injury reduction benefits and combines these values with maintenance costs and property damage only crash avoidance benefits. The costs in Table 16 do not vary by discount rate because this part of Table 16 only includes the costs that are incurred in order to produce the rear visibility system and install it on the vehicle (the installation costs). All these costs are incurred on the year the vehicle is produced. Thus, the costs vary by 180° or 130° camera and display type but do not vary by discount rate.

However, the benefits do vary by both discount rate and camera selection. Depending on the type of equipment used by the manufacturer (180° or 130° camera) and the discount rate (3% or 7%) the agency expects today's final rule to save between 20 and 30 equivalent lives per year.[154] Using the most up-to-date value of a statistical life from the Department's guidance[155], the agency expects the annual benefit of the rule (due to fatality and injury reduction) to be between $206 million and $317 million. We anticipate that the benefits from societal costs avoided due to fatality and injury reduction[156] will be $16 million to $24 million. Further, the net benefits[157] from property

[152] Further details on the agency's estimates are available in the Final Regulatory Impact Analysis. This document can be found in the docket cited at the beginning of this document.

[153] Further information on these calculations is available in the Final Regulatory Impact Analysis. This analysis is available in the docket referenced at the beginning of this document.

[154] These benefits do not include those lives that would be saved by rearview video systems voluntarily installed by the industry.

[155] *See* Guidance on Treatment of the Economic Value of a Statistical Life in U.S. Department of Transportation Analyses, *available at http://www.dot.gov/sites/dot.dev/files/docs/VSL%20Guidance%202013.pdf.*

[156] These are costs that would be incurred as a result of a fatality or injury that is apart from the value of the life lost or the quality of life lost (e.g., medical costs.

[157] While rearview video systems enable a driver to avoid property damage only crashes in addition to crashes resulting in injuries and fatalities, the property damage only cases also include cases where the crash was either not avoided or unavoidable (such as a rear-end collision) which would result in the additional expense of repairing the rearview video system. When considering these cases, the benefit of avoiding property damage outweighed costs of repairing rearview video systems when such crashes were not avoided. Thus, this value is expressed as a net benefit and is included in the benefits section of Table 16.

damage avoided range from $44 million to $57 million. Thus, the agency expects the total benefits from today's rule to range from $265 million to $396 million when considering injuries avoided, fatalities avoided, and property damage across the 3 and 7 percent discount rates.[158] Note that for the 180° camera options (the Low and High Estimates), the lifetime monetized benefits are the same, but the cost of display placement differs based on display type.

In this case, the monetized costs outweigh the monetized benefits and therefore the net impacts are cost figures. However, as mentioned above, there are significant benefits to this rule that cannot be quantified in monetary terms. The Primary Estimate is the lowest installation cost option (which assumes manufacturers will use a 130° camera and will utilize any existing display units already offered in their vehicles). The Low Estimate and High Estimate provide the estimated *minimum and maximum net impacts* possible. The Low Estimate is the 180° camera and assumes that manufacturers will install a new display to meet the requirements of today's rule. It represents the minimum overall benefit estimate as it has the largest negative net impact. Conversely, the High Estimate is the 180° camera and assumes that manufacturers that currently offer vehicles with display units are able and choose to use those existing display units to meet the requirements of today's rule. This represents the maximum overall benefit estimate because it has the smallest negative net impact.

TABLE 16—SUMMARY OF BENEFITS AND COSTS PASSENGER CARS AND LIGHT TRUCKS (MILLIONS 2010$) MY2018 AND THEREAFTER

Benefits	Primary estimate	Low estimate	High estimate	Discount rate (percent)
Lifetime Monetized	$265	$305	$305	7
Lifetime Monetized	344	396	396	3
Costs:				
Lifetime Monetized	546	620	557	7
Lifetime Monetized	546	620	557	3
Net Impact:				
Lifetime Monetized	−281	−315	−252	7
Lifetime Monetized	−202	−224	−161	3

f. Cost Effectiveness and Regulatory Alternatives

Based on the aforementioned revised figures for costs and quantifiable benefits, and on the relevant discount rates of 3 and 7 percent, the net cost per equivalent life saved for rearview video systems ranges from $15.9 to $26.3 million. However, as discussed above, the agency believes that today's rule also affords significant unquantifiable benefits in the form of reducing a safety risk that disproportionately affects particularly vulnerable population groups (such as young children), and exacts a significant emotional cost on relatives and caretakers who backover their own children. In addition, the rear visibility systems required under today's rule are the only effective means of addressing the backover crash safety concern and fulfilling the requirements of the K.T. Safety Act. Further, after considering the totality of the information, we find that the requirements of today's rule are the most cost-effective way of achieving the objectives of the K.T. Safety Act.

TABLE 17—ESTIMATED COST EFFECTIVENESS

	Cost per Equivalent Life Saved
Rearview Video Systems.	$15.9 to $26.3 million.*

*The range presented is from a 3% to 7% discount rate.

To devise an appropriate regulatory approach to address the safety risks presented by backover crashes and the requirements of the K.T. Safety Act, the agency considered various technologies and applications of those technologies over the course of this rulemaking, beginning with the ANPRM and continuing through to the development of this final rule. As previously noted, the three main technologies considered included rearview video systems, sensor systems, and additional rearview mirrors. While various commenters suggested alternative sensor-based systems, none of these systems were able to address our concerns that the data indicate that without visual confirmation of the presence of a child or other pedestrian behind the vehicle, sensors simply did not induce a sufficient and timely response from the driver so as to avoid the crash. While rearview video systems were the most expensive technology considered, the agency's research found that rearview video systems were also the only effective technology. Because of the significantly lower effectiveness of sensor systems that do not afford the driver a visual image of the area behind the vehicle, the NPRM estimated a significantly higher cost per equivalent life saved for rear object detection sensor systems than rearview video systems. In spite of the lower per vehicle cost estimate for sensor systems in the NPRM, their very low effectiveness resulted in the agency's estimating that the cost per equivalent life saved by these sensor systems would be between $95.5 and $192.3 million. While the new information that the agency received through the day care study has improved the estimated effectiveness of sensor systems somewhat, the agency still estimates that the cost per equivalent life saved for sensor systems would range from $44.6 to $94.1 million.[159] This means

[158] The benefits estimates in this paragraph are expressed in ranges. Each range represents the highest and lowest figure when considering the different discount rates and camera types. However, the same combination of camera type and discount rate do not produce the highest and lowest figure in each of the ranges specified in this paragraph. Thus, the sum of highest and lowest figures in fatality/injury reduction benefits range and the property damage only benefits range do not correspond to the highest and lowest figures in the total benefits range. The Final Regulatory Impact Analysis contains the exact figures that show the total monetized benefit (as the sum of the fatality, injury, and property damage reduction benefits) for each combination of camera type and discount, available in the docket number referenced at the beginning of this document.

[159] For further information, please reference the Final Regulatory Impact Analysis prepared in support of this final rule, available in the docket number referenced at the beginning of this document.

that sensors would cost more than twice the amount per life saved when compared to rearview video technology. Thus, the agency continues to believe that rearview video systems are significantly more cost effective than rear sensor systems and that rearview video systems are the most cost effective technology available that can address the backover safety concern. While we believe that the statutory mandate in the K.T. Safety Act compels the agency to take regulatory action to address the backover safety risk (even in situations where the regulatory action may not be cost beneficial when comparing monetized cost to benefits), we believe that mandate is more rationally achieved through the alternative that saves substantially more lives at substantially less cost per life than the potential alternatives.

Finally, while the agency considered the application of rear visibility countermeasures to certain vehicle types or size, the agency understands the requirements of the K.T. Safety Act as directing the agency to make revisions to FMVSS No. 111 to expand the required field of view for all vehicles with a GVWR under 10,000 pounds except for motorcycles and trailers. Although the agency is afforded the limited discretion of applying different rear visibility countermeasures to different vehicle types, the agency does not believe that the effectiveness data from our research or our cost estimates support applying a different rear visibility countermeasure based on vehicle type. As mentioned above, to apply sensor or mirror-based countermeasures, instead of the rear visibility system requirements of today's final rule, to certain vehicle types would forgo important safety benefits. Further, such application would increase the cost per equivalent life saved as the reduction in the costs of these alternative countermeasures would not offset the greater reduction in the effectiveness of the countermeasure. Given this information, the agency concludes in today's final rule that the rear visibility systems required in today's rule are the only effective means of achieving a meaningful reduction in backover crash fatalities and injuries.

Therefore, after considering the aforementioned technological and regulatory alternatives, the agency reiterates its conclusion above that the rear visibility systems required under today's rule are not only the single effective way of addressing the backover safety risk and meeting the requirements of the K.T. Safety Act, but also the most cost effective way of doing so.

V. Regulatory Analyses

Executive Order 12866, Executive Order 13563, and DOT Regulatory Policies and Procedures

Executive Order 12866, Executive Order 13563, and the Department of Transportation's regulatory policies require this agency to make determinations as to whether a regulatory action is ''significant'' and therefore subject to OMB review and the requirements of the aforementioned Executive Orders. The Executive Order 12866 defines a ''significant regulatory action'' as one that is likely to result in a rule that may:

(1) Have an annual effect on the economy of $100 million or more or adversely affect in a material way the economy, a sector of the economy, productivity, competition, jobs, the environment, public health or safety, or State, local, or Tribal governments or communities;

(2) Create a serious inconsistency or otherwise interfere with an action taken or planned by another agency;

(3) Materially alter the budgetary impact of entitlements, grants, user fees, or loan programs or the rights and obligations of recipients thereof; or

(4) Raise novel legal or policy issues arising out of legal mandates, the President's priorities, or the principles set forth in the Executive Order.

We have considered the potential impact of this final rule under Executive Order 12866, Executive Order 13563, and the Department of Transportation's regulatory policies and procedures and have determined that today's final rule is economically significant. This rulemaking is economically significant because it is likely to have an annual effect on the economy of $100 million or more. Thus it was reviewed by the Office of Management and Budget under E.O. 12866 and 13563. The rulemaking action has also been determined to be significant under the Department's regulatory policies and procedures. The regulatory impact analysis (RIA) fully discusses the estimated costs and benefits of this rulemaking action. The costs and benefits are also summarized in section IV of this preamble, *supra.*

Executive Order 13609: Promoting International Regulatory Cooperation

The policy statement in section 1 of Executive Order 13609 provides, in part:

> The regulatory approaches taken by foreign governments may differ from those taken by U.S. regulatory agencies to address similar issues. In some cases, the differences between the regulatory approaches of U.S. agencies and those of their foreign counterparts might not be necessary and might impair the ability of American businesses to export and compete internationally. In meeting shared challenges involving health, safety, labor, security, environmental, and other issues, international regulatory cooperation can identify approaches that are at least as protective as those that are or would be adopted in the absence of such cooperation. International regulatory cooperation can also reduce, eliminate, or prevent unnecessary differences in regulatory requirements.

NHTSA is not currently aware of any ''regulatory approaches taken by foreign governments'' that would address the safety concerns raised in this rulemaking. While today's amendments to FMVSS No. 111 establish new requirements, the agency is not aware of any approaches taken by foreign governments that would address Congress' concern in the K.T. Safety Act regarding fatalities and injuries resulting from backover crashes. Thus, the agency is not aware of any such approach that would be at least as protective as the approach adopted by the agency in today's final rule.

Regulatory Flexibility Act

Pursuant to the Regulatory Flexibility Act (5 U.S.C. 601 et seq., as amended by the Small Business Regulatory Enforcement Fairness Act (SBREFA) of 1996), whenever an agency is required to publish a notice of proposed rulemaking or final rule, it must prepare and make available for public comment a regulatory flexibility analysis that describes the effect of the rule on small entities (i.e., small businesses, small organizations, and small governmental jurisdictions). The Small Business Administration's regulations at 13 CFR Part 121 define a small business, in part, as a business entity ''which operates primarily within the United States.'' (13 CFR 121.105(a)). No regulatory flexibility analysis is required if the head of an agency certifies the proposal will not have a significant economic impact on a substantial number of small entities. SBREFA amended the Regulatory Flexibility Act to require Federal agencies to provide a statement of the factual basis for certifying that a proposal will not have a significant economic impact on a substantial number of small entities.

I hereby certify that this proposed rule would not have a significant economic impact on a substantial number of small entities. We believe that the rulemaking will not have a significant economic impact on the small vehicle manufacturers because the systems are not technically difficult to develop or install and the cost of the systems ($44 to $147) is a small proportion of the

overall vehicle cost for most of these specialty cars.

Today's final rule will directly affect motor vehicle manufacturers and final-stage manufacturers. The majority of motor vehicle manufacturers will not qualify as a small business. There are ten manufacturers of passenger cars that are small businesses.[160] These manufacturers, along with manufacturers that do not qualify as a small business, are already required to comply with the current mirror requirements of FMVSS No. 111. Similarly, there are several manufacturers of low-speed vehicles that are small businesses.[161] Previously, FMVSS No. 111 did not apply to low-speed vehicles, although they were required to have basic mirrors pursuant to FMVSS No. 500, Low-speed vehicles (including the option of having either an exterior driver-side mirror or an interior rearview mirror). The addition of a rearview video system can be accomplished via the purchase of an exterior video camera, integration of a console video screen or the addition of an interior rearview mirror-mounted screen, and wiring to connect the two as well as to connect them to the vehicle.

Because the K.T. Safety Act applies to all motor vehicles with a GVWR of 10,000 pounds or less (except motorcycles and trailers) in its mandate to reduce backovers, all of these small manufacturers are affected by the requirements in today's final rule. However, the economic impact upon these entities will not be significant for the following reasons.

(1) Potential cost increases are small compared to the price of the vehicles being manufactured.

(2) Today's final rule provides four years lead-time, the limit permitted by the K.T. Safety Act, and will allow small volume manufacturers the option of waiting until the end of the phase-in (until May 1, 2018) to meet the rear visibility requirements.[162]

In the NPRM, the agency had also considered several alternatives that could help to reduce the burden on small businesses. The agency considered an alternative under which passenger cars would be required to be equipped with either a visibility system or with a system that utilizes an ultrasonic sensor that monitors the specified area behind the vehicle and an audible warning. This alternative would have lower installation costs but also substantially lower safety benefits. Thus, it would have significantly higher costs per equivalent life saved.

Executive Order 13132 (Federalism)

NHTSA has examined today's final rule pursuant to Executive Order 13132 (64 FR 43255, August 10, 1999) and concluded that no additional consultation with States, local governments or their representatives is mandated beyond the rulemaking process. The agency has concluded that the rulemaking would not have sufficient federalism implications to warrant consultation with State and local officials or the preparation of a federalism summary impact statement. Today's final rule does not have ''substantial direct effects on the States, on the relationship between the national government and the States, or on the distribution of power and responsibilities among the various levels of government.''

NHTSA rules can have preemptive effect in two ways. First, the National Traffic and Motor Vehicle Safety Act contains an express preemption provision:

When a motor vehicle safety standard is in effect under this chapter, a State or a political subdivision of a State may prescribe or continue in effect a standard applicable to the same aspect of performance of a motor vehicle or motor vehicle equipment only if the standard is identical to the standard prescribed under this chapter.

49 U.S.C. 30103(b)(1). It is this statutory command by Congress that preempts any non-identical State legislative and administrative law addressing the same aspect of performance.

The express preemption provision described above is subject to a savings clause under which ''[c]ompliance with a motor vehicle safety standard prescribed under this chapter does not exempt a person from liability at common law.'' 49 U.S.C. 30103(e) Pursuant to this provision, State common law tort causes of action against motor vehicle manufacturers that might otherwise be preempted by the express preemption provision are generally preserved. However, the Supreme Court has recognized the possibility, in some instances, of implied preemption of State common law tort causes of action by virtue of NHTSA's rules—even if not expressly preempted.

This second way that NHTSA rules can preempt is dependent upon the existence of an actual conflict between an FMVSS and the higher standard that would effectively be imposed on motor vehicle manufacturers if someone obtained a State common law tort judgment against the manufacturer—notwithstanding the manufacturer's compliance with the NHTSA standard. Because most NHTSA standards established by an FMVSS are minimum standards, a State common law tort cause of action that seeks to impose a higher standard on motor vehicle manufacturers will generally not be preempted. However, if and when such a conflict does exist—for example, when the standard at issue is both a minimum and a maximum standard—the State common law tort cause of action is impliedly preempted. See *Geier v. American Honda Motor Co.,* 529 U.S. 861 (2000).

Pursuant to Executive Order 13132, NHTSA has considered whether this rule could or should preempt State common law causes of action. The agency's ability to announce its conclusion regarding the preemptive effect of one of its rules reduces the likelihood that preemption will be an issue in any subsequent tort litigation.

To this end, the agency has examined the nature (e.g., the language and structure of the regulatory text) and objectives of today's final rule and finds that this rule, like many NHTSA rules, prescribes only a minimum safety standard. Accordingly, NHTSA does not intend that this final rule preempt state tort law that would effectively impose a higher standard on motor vehicle manufacturers than that established by today's final rule. Establishment of a higher standard by means of State tort law would not conflict with the minimum standard established in this document. Without any conflict, there could not be any implied preemption of a State common law tort cause of action.

NHTSA solicited comments from the States and other interested parties on this assessment of issues relevant to E.O. 13132 in the NPRM. However, we did not receive any comments with regard to this issue.

Executive Order 12988 (Civil Justice Reform)

When promulgating a regulation, Executive Order 12988 specifically requires that the agency must make every reasonable effort to ensure that the regulation, as appropriate: (1) Specifies in clear language the preemptive effect; (2) specifies in clear language the effect

[160] Carbon Motor, CODA, Fisker Automotive Inc., GGT Electric, Mosler Automotive, Panoz Auto Development Company, Saleen, Shelby American Inc., Standard Taxi, Tesla Motors Inc.

[161] Columbia ParCar Corp., Club Car, LLC, Miles Electric Vehicles LLC, STAR Electric Car Sales, Tomberlin, Wheego Electric Cars, Inc., and Wildfire.

[162] While the agency currently does not have information that would show how long it would take for small manufacturers to implement the requirements in today's final rule, we do not have the statutory flexibility to afford small manufacturers more lead time beyond the four-year statutory limit.

on existing Federal law or regulation, including all provisions repealed, circumscribed, displaced, impaired, or modified; (3) provides a clear legal standard for affected conduct rather than a general standard, while promoting simplification and burden reduction; (4) specifies in clear language the retroactive effect; (5) specifies whether administrative proceedings are to be required before parties may file suit in court; (6) explicitly or implicitly defines key terms; and (7) addresses other important issues affecting clarity and general draftsmanship of regulations. Pursuant to this Order, NHTSA notes as follows. The preemptive effect of this final rule is discussed above in connection with Executive Order 13132. NHTSA notes further that there is no requirement that individuals submit a petition for reconsideration or pursue other administrative proceeding before they may file suit in court.

Executive Order 13045 (Protection of Children From Environmental Health and Safety Risks)

Executive Order 13045, ''Protection of Children from Environmental Health and Safety Risks,'' (62 FR 19885; April 23, 1997) applies to any proposed or final rule that: (1) Is determined to be ''economically significant,'' as defined in Executive Order 12866, and (2) concerns an environmental health or safety risk that NHTSA has reason to believe may have a disproportionate effect on children. If a rule meets both criteria, the agency must evaluate the environmental health or safety effects of the rule on children, and explain why the rule is preferable to other potentially effective and reasonably feasible alternatives considered by the agency.

Today's final rule is subject to Executive Order 13045 because it is economically significant and available data demonstrate that the safety risk addressed by this proposal disproportionately involves children, especially very young ones. As the safety risk to children is a central concern of this rulemaking, the issues that must be analyzed under this Executive Order are discussed extensively in the preamble above and in the RIA.

National Technology Transfer and Advancement Act

Under the National Technology Transfer and Advancement Act of 1995 (NTTAA) (Pub.L. 104–113), ''all Federal agencies and departments shall use technical standards that are developed or adopted by voluntary consensus standards bodies, using such technical standards as a means to carry out policy objectives or activities determined by the agencies and departments.'' Voluntary consensus standards are technical standards (e.g., materials specifications, test methods, sampling procedures, and business practices) that are developed or adopted by voluntary consensus standards bodies, such as the Society of Automotive Engineers (SAE). The NTTAA directs us to provide Congress, through OMB, explanations when we decide not to use available and applicable voluntary consensus standards.

Pursuant to the above requirements, the agency conducted a review of voluntary consensus standards to determine if any were applicable to today's final rule. While the agency did not discover any voluntary consensus standards that can be applied to the entirety of rear visibility systems, we found various voluntary consensus standards which could be utilized for durability and luminance requirements for today's final rule. The agency considered the possibility of using these voluntary consensus standards. However, we have found these standards to be unsuitable for incorporation into an FMVSS at this time. Our analysis of each of the applicable voluntary consensus standards can be found in our discussion of the durability and luminance requirements in earlier sections of this preamble. Further, in response to comments, NHTSA endeavored to establish requirements that are as performance based and technologically-neutral as possible, to allow maximum design freedom while still meeting the performance requirements needed for safety.

Unfunded Mandates Reform Act

The Unfunded Mandates Reform Act of 1995 requires agencies to prepare a written assessment of the costs, benefits and other effects of proposed or final rules that include a Federal mandate likely to result in the expenditure by State, local or tribal governments, in the aggregate, or by the private sector, of more than $100 million annually (adjusted for inflation with base year of 1995). NHTSA must comply with that requirement in connection with this rulemaking as today's final rule would result in expenditures by the private sector of over $100 million annually.

As noted previously, the agency has prepared a detailed economic assessment in the RIA. In that assessment, the agency analyzes the benefits and costs of the rear visibility systems required under today's final rule for passenger cars, MPVs, trucks, buses, and low-speed vehicles with a GVWR of 10,000 pounds or less. NHTSA's analysis indicates that today's final rule could result in private expenditures of up to $1.7 billion annually.

The RIA and the PRIA (published in conjunction with the NPRM) analyzed the expected benefits and costs of alternative countermeasure options, including mirrors, cameras, and sensors, as specified in the K.T. Safety Act. The agency subjected several types of each class of countermeasure to thorough effectiveness testing and cost-benefit analysis. Additionally, the agency previously published a detailed ANPRM, NPRM, and PRIA, in order to explain its thoughts on the technological solutions available and solicit information on costs, benefits, and applications on all possible solutions to the safety concern. NHTSA received a large variety of comments on the ANPRM, NPRM, and PRIA and used that information in formulating today's final rule.

As explained in detail in the RIA and the preamble for today's final rule, after carefully exploring all possible alternatives to meet the statutory mandate of the Act, NHTSA concluded that rearview video systems offer not only the highest overall benefits, but also the most efficient cost per life saved ratio.

In addition, NHTSA has performed a probabilistic uncertainty analysis to examine the degree of uncertainty in its cost and benefit estimates and included that analysis in the RIA.

National Environmental Policy Act

NHTSA has analyzed this rulemaking action for the purposes of the National Environmental Policy Act. The agency has determined that implementation of this action would not have any significant impact on the quality of the human environment.

Paperwork Reduction Act

Under the Paperwork Reduction Act of 1995 (PRA), a person is not required to respond to a collection of information by a Federal agency unless the collection displays a valid OMB control number. Today's final rule includes a collection of information, i.e., the phase-in reporting requirements. If approved, these requirements would require manufacturers of passenger cars and of trucks, buses, MPVs, and low-speed vehicles with a GVWR of 10,000 pounds or less, to annually submit a report for each of two years (with requirements in the phase-in period) concerning the number of such vehicles that meet the rear visibility system requirements. In

the preamble of the NPRM, the agency solicited public comment on the following information collection request. In response, the agency did not receive any comments.

Accordingly, the Department of Transportation is submitting the following information collection request to OMB for review and clearance under the PRA. The following information is identical to the information the agency offered for public comment in the NPRM except that the agency discovered an error in the *Estimated Costs* calculation and in the estimated number of manufacturers. While the agency believes that this information request will create a small recordkeeping burden on the manufacturers, we do not expect that manufacturers will incur any additional costs beyond that recordkeeping burden. Thus, we have adjusted the *Estimated Costs* to be $0. In addition, while the agency correctly calculated 42 total burden hours (2 hours per manufacturer), the agency stated, in error, that there were 24 total manufacturers. We have corrected the number of manufacturers to 21 and the total burden hours continue to be 42 total hours. The agency will complete the information collection request process before the beginning of the phase-in schedule on May 1, 2016.

Agency: National Highway Traffic Safety Administration (NHTSA).

Title: Phase-In Production Reporting Requirements for Rear Visibility Systems.

Type of Request: New request.

OMB Clearance Number: None assigned.

Form Number: This collection of information will not use any standard forms.

Affected Public: The respondents are manufacturers of passenger cars, multipurpose passenger vehicles, trucks, buses, and low-speed vehicles having a gross vehicle weight rating of 4,536 kg (10,000 pounds) or less. The agency estimates that there are approximately 21 such manufacturers.

Estimate of the Total Annual Reporting and Recordkeeping Burden Resulting from the Collection of Information: NHTSA estimates that the total annual burden is 42 hours (2 hours per manufacturer per year). Two reports per manufacturer would be collected.

Estimated Costs: NHTSA estimates that the total annual cost burden, in U.S. dollars, will be $0. No additional resources would be expended by vehicle manufacturers to gather annual production information because they already compile this data for their own purposes.

Summary of the Collection of Information: This collection would require manufacturers of passenger cars, multipurpose passenger vehicles, trucks, buses, and low-speed vehicles having a gross vehicle weight rating of 4,536 kg (10,000 pounds) or less to provide motor vehicle production data for the following two years: May 1, 2016 through April 30, 2017; and May 1, 2017 through April 30, 2018.

Description of the Need for the Information and the Proposed Use of the Information: The purpose of the reporting requirements will be to aid NHTSA in determining whether a manufacturer has complied with the requirements of Federal Motor Vehicle Safety Standard No. 111, Rear visibility, during the phase-in of new requirements for rear visibility systems.

Regulation Identifier Number (RIN)

The Department of Transportation assigns a regulation identifier number (RIN) to each regulatory action listed in the Unified Agenda of Federal Regulations. The Regulatory Information Service Center publishes the Unified Agenda in April and October of each year. You may use the RIN contained in the heading at the beginning of this document to find this action in the Unified Agenda.

VI. Regulatory Text

List of Subjects in 49 CFR Part 571

Imports, incorporation by reference, motor vehicle safety, reporting and recordkeeping, tires.

In consideration of the foregoing, NHTSA amends 49 CFR part 571 as follows:

PART 571—FEDERAL MOTOR VEHICLE SAFETY STANDARDS

■ 1. The authority citation for Part 571 of Title 49 continues to read as follows:

Authority: 49 U.S.C. 322, 30111, 30115, 30117, and 30166; delegation of authority at 49 CFR 1.95.

■ 2. Section 571.5 is amended by revising paragraphs (d)(5) and (k)(26) to read as follows:

§ 571.5 Matter incorporated by reference.

* * * * *

(d) * * *

(5) ASTM B117–03, ''Standard Practice for Operating Salt Spray (Fog) Apparatus,'' approved October 1, 2003, into §§ 571.106; 571.111.

* * * * *

(k) * * *

(26) SAE Standard J826 JUL95, ''Devices for Use in Defining and Measuring Vehicle Seating Accommodation,'' revised July 1995, into §§ 571.10; 571.111; 571.202; 571.202a; 571.216a.

* * * * *

■ 3. Section 571.111 is amended by
■ a. Revising the section heading;
■ b. Revising S1;
■ c. Revising S3;
■ d. Adding, in alphabetical order, the definitions of ''Backing event,'' ''Environmental test fixture,'' ''External component,'' ''Key,'' ''Limited line manufacturer,'' ''Rearview image,'' ''Rear visibility system,'' ''Small manufacturer,'' and ''Starting system'' to S4;
■ e. Adding S5.5 through S5.5.7;
■ f. Revising S6;
■ g. Adding S6.2 through S6.2.7;
■ h. Adding S14 through S14.3;
■ i. Adding S15 through S15.7; and
■ j. Adding Figures 5 and 6 to read as follows:

§ 571.111 Standard No. 111; Rear visibility.

S1. *Scope.* This standard specifies requirements for rear visibility devices and systems.

* * * * *

S3. *Application.* This standard applies to passenger cars, multipurpose passenger vehicles, trucks, buses, school buses, motorcycles and low-speed vehicles.

S4. * * *

Backing event means an amount of time which starts when the vehicle's direction selector is placed in reverse, and ends at the manufacturer's choosing, when the vehicle forward motion reaches:

(a) a speed of 10 mph,

(b) a distance of 10 meters traveled, or

(c) a continuous duration of 10 seconds.

* * * * *

Environmental test fixture means a device designed to support the external components of the rear visibility system for testing purposes, using any factory seal which would be used during normal vehicle operation, in a manner that simulates the on-vehicle component orientation during normal vehicle operation, and prevents the exposure of any test conditions to portions of the external component which are not exposed to the outside of the motor vehicle.

External component means any part of the rear visibility system which is exposed to the outside of the motor vehicle.

Key means a physical device or an electronic code which, when inserted into the starting system (by physical or electronic means), enables the vehicle operator to activate the engine or motor.

Limited line manufacturer means a manufacturer that sells three or fewer carlines, as that term is defined in 49 CFR 583.4, in the United States during a production year, as that term is defined in S15.

Rearview image means a visual image, detected by means of a single source, of the area directly behind a vehicle that is provided in a single location to the vehicle operator and by means of indirect vision.

Rear visibility system means the set of devices or components which together perform the function of producing the rearview image as required under this standard.

Small manufacturer means an original vehicle manufacturer that produces or assembles fewer than 5,000 vehicles annually for sale in the United States.

Starting system means the vehicle system used in conjunction with the key to activate the engine or motor.

* * * * *

S5.5 *Rear visibility.*

(a) *Phase-in period requirements.* For passenger cars with a GVWR of 4,536 kg or less manufactured on or after May 1, 2016, but not later than April 30, 2018, a percentage of each manufacturer's production, as specified in S15, shall display a rearview image meeting the requirements of S5.5.1.

(b) *Final requirements.* Each passenger car with a GVWR of 4,536 kg or less manufactured on or after May 1, 2018, shall display a rearview image meeting the requirements of S5.5.1 through S5.5.7.

S5.5.1 *Field of view.* When tested in accordance with the procedures in S14.1, the rearview image shall include:

(a) A minimum of a 150-mm wide portion along the circumference of each test object located at positions F and G specified in S14.1.4; and

(b) The full width and height of each test object located at positions A through E specified in S14.1.4.

S5.5.2 *Size.* When the rearview image is measured in accordance with the procedures in S14.1, the calculated visual angle subtended by the horizontal width of

(a) All three test objects located at positions A, B, and C specified in S14.1.4 shall average not less than 5 minutes of arc; and

(b) Each individual test object (A, B, and C) shall not be less than 3 minutes of arc.

S5.5.3 *Response time.* The rearview image meeting the requirements of S5.5.1 and S5.5.2, when tested in accordance with S14.2, shall be displayed within 2.0 seconds of the start of a backing event.

S5.5.4 *Linger time.* The rearview image meeting the requirements of S5.5.1 and S5.5.2 shall not be displayed after the backing event has ended.

S5.5.5 *Deactivation.* The rearview image meeting the requirements of S5.5.1 and S5.5.2 shall remain visible during the backing event until either, the driver modifies the view, or the vehicle direction selector is removed from the reverse position.

S5.5.6 *Default view.* The rear visibility system must default to the rearview image meeting the requirements of S5.5.1 and S5.5.2 at the beginning of each backing event regardless of any modifications to the field of view the driver has previously selected.

S5.5.7 *Durability.* The rear visibility system shall meet the field of view and image size requirements of S5.5.1 and S5.5.2 after each durability test specified in S14.3.1, S14.3.2, and S14.3.3.

S6. *Requirements for multipurpose passenger vehicles, low-speed vehicles, trucks, buses, and school buses with GVWR of 4,536 kg or less.*

* * * * *

S6.2 *Rear visibility.*

(a) *Phase-in period requirements.* For multipurpose passenger vehicles, low-speed vehicles, trucks, buses, and school buses with a GVWR of 4,536 kg or less manufactured on or after May 1, 2016, but not later than April 30, 2018, a percentage of each manufacturer's production, as specified in S15, shall display a rearview image meeting the requirements of S6.2.1.

(b) *Final requirements.* Each multipurpose passenger vehicle, low-speed vehicle, truck, bus, and school bus with a GVWR of 4,536 kg or less manufactured on or after May 1, 2018, shall display a rearview image meeting the requirements of S6.2.1 through S6.2.7.

S6.2.1 *Field of view.* When tested in accordance with the procedures in S14.1, the rearview image shall include:

(a) A minimum of a 150-mm wide portion along the circumference of each test object located at positions F and G specified in S14.1.4; and

(b) The full width and height of each test object located at positions A through E specified in S14.1.4.

S6.2.2 *Size.* When the rearview image is measured in accordance with the procedures in S14.1, the calculated visual angle subtended by the horizontal width of

(a) All three test objects located at positions A, B, and C specified in S14.1.4 shall average not less than 5 minutes of arc; and

(b) Each individual test object (A, B, and C) shall not be less than 3 minutes of arc.

S6.2.3 *Response time.* The rearview image meeting the requirements of S6.2.1 and S6.2.2, when tested in accordance with S14.2, shall be displayed within 2.0 seconds of the start of a backing event.

S6.2.4 *Linger time.* The rearview image meeting the requirements of S6.2.1 and S6.2.2 shall not be displayed after the backing event has ended.

S6.2.5 *Deactivation.* The rearview image meeting the requirements of S6.2.1 and S6.2.2 shall remain visible during the backing event until either, the driver modifies the view, or the vehicle direction selector is removed from the reverse position.

S6.2.6 *Default view.* The rear visibility system must default to the rearview image meeting the requirements of S6.2.1 and S6.2.2 at the beginning of each backing event regardless of any modifications to the field of view the driver has previously selected.

S6.2.7 *Durability.* The rear visibility system shall meet the field of view and image size requirements of S6.2.1 and S6.2.2 after each durability test specified in S14.3.1, S14.3.2, and S14.3.3.

* * * * *

S14. *Rear visibility test procedure.*

S14.1 *Field of view and image size test procedure.*

S14.1.1 *Lighting.* The ambient illumination conditions in which testing is conducted consists of light that is evenly distributed from above and is at an intensity of between 7,000 lux and 10,000 lux, as measured at the center of the exterior surface of the vehicle's roof.

S14.1.2 *Vehicle conditions.*

S14.1.2.1 *Tires.* The vehicle's tires are set to the vehicle manufacturer's recommended cold inflation pressure.

S14.1.2.2 *Fuel tank loading.* The fuel tank is full.

S14.1.2.3 *Vehicle load.* The vehicle is loaded to simulate the weight of the driver and four passengers or the designated occupant capacity, if less. The weight of each occupant is represented by 45 kg resting on the seat pan and 23 kg resting on the vehicle floorboard placed in the driver's designated seating position and any other available designated seating position.

S14.1.2.4 *Rear hatch and trunk lids.* If the vehicle is equipped with rear hatches or trunk lids, they are closed and latched in their normal vehicle operating condition.

S14.1.2.5 *Driver's seat positioning.*

S14.1.2.5.1 Adjust the driver's seat to the midpoint of the longitudinal

adjustment range. If the seat cannot be adjusted to the midpoint of the longitudinal adjustment range, the closest adjustment position to the rear of the midpoint shall be used.

S14.1.2.5.2 Adjust the driver's seat to the lowest point of all vertical adjustment ranges present.

S14.1.2.5.3 Using the three dimensional SAE Standard J826 JUL95 (incorporated by reference, see § 571.5) manikin, adjust the driver's seat back angle at the vertical portion of the H-point machine's torso weight hanger to 25 degrees. If this adjustment setting is not available, adjust the seat-back angle to the positional detent setting closest to 25 degrees in the direction of the manufacturer's nominal design riding position.

S14.1.3 *Test object.* Each test object is a right circular cylinder that is 0.8 m high and 0.3 m in external diameter. There are seven test objects, designated A through G, and they are marked as follows.

(a) Test objects A, B, C, D, and E are marked with a horizontal band encompassing the uppermost 150 mm of the side of the cylinder.

(b) Test objects F and G are marked on the side with a solid vertical stripe of 150 mm width extending from the top to the bottom of each cylinder.

(c) Both the horizontal band and vertical stripe shall be of a color that contrasts with both the rest of the cylinder and the test surface.

S14.1.4 *Test object locations and orientation.* Place the test objects at locations specified in S14.1.4(a)-(f) and illustrated in Figure 5. Measure the distances shown in Figure 5 from a test object to another test object or other object from the cylindrical center (axis) of the test object as viewed from above. Each test object is oriented so that its axis is vertical.

(a) Place test objects F and G so that their centers are in a transverse vertical plane that is 0.3 m to the rear of a transverse vertical plane tangent to the rearmost surface of the rear bumper.

(b) Place test objects D and E so that their centers are in a transverse vertical plane that is 3.05 m to the rear of a transverse vertical plane tangent to the rearmost surface of the rear bumper.

(c) Place test objects A, B and C so that their centers are in a transverse vertical plane that is 6.1 m to the rear of a transverse vertical plane tangent to the rearmost surface of the rear bumper.

(d) Place test object B so that its center is in a longitudinal vertical plane passing through the vehicle's longitudinal centerline.

(e) Place test objects C, E, and G so that their centers are in a longitudinal vertical plane located 1.52 m, measured laterally and horizontally, to the right of the vehicle longitudinal center line.

(f) Place test objects A, D, and F so that their centers are in a longitudinal vertical plane located 1.52 m, measured laterally and horizontally, to the left of the vehicle longitudinal center line.

S14.1.5 *Test reference point.* Obtain the test reference point using the following procedure.

(a) Locate the center of the forward-looking eye midpoint (M_f) illustrated in Figure 6 so that it is 635 mm vertically above the H point (H) and 96 mm aft of the H point.

(b) Locate the head/neck joint center (J) illustrated in Figure 6 so that it is 100 mm rearward of M_f and 588 mm vertically above the H point.

(c) Draw an imaginary horizontal line between M_f and a point vertically above J, defined as J_2.

(d) Rotate the imaginary line about J_2 in the direction of the rearview image until the straight-line distance between M_f and the center of the display used to present the rearview image required in this standard reaches the shortest possible value.

(e) Define this new, rotated location of M_f to be M_r (eye midpoint rotated).

S14.1.6 *Display adjustment.* If the display is mounted with a rotational adjustment mechanism, adjust the display such that the surface of the display is normal to the imaginary line traveling through M_r and J_2 or as near to normal as the display adjustment will allow.

S14.1.7 *Steering wheel adjustment.* The steering wheel is adjusted to the position where the longitudinal centerline of all vehicle tires are parallel to the longitudinal centerline of the vehicle. If no such position exists, adjust the steering wheel to the position where the longitudinal centerline of all vehicle tires are closest to parallel to the longitudinal centerline of the vehicle.

S14.1.8 *Measurement procedure.*

(a) Locate a 35 mm or larger format still camera, video camera, or digital equivalent such that the center of the camera's image plane is located at M_r and the camera lens is directed at the center of the display's rearview image.

(b) Affix a ruler at the base of the rearview image in an orientation perpendicular with a test object cylinder centerline. If the vehicle head restraints obstruct the camera's view of the display, they may be adjusted or removed.

(c) Photograph the image of the visual display with the ruler included in the frame and the rearview image displayed.

S14.1.8.1 *Extract photographic data.*

(a) Using the photograph, measure the apparent length, of a 50 mm delineated section of the in-photo ruler, along the ruler's edge, closest to the rearview image and at a point near the horizontal center of the rearview image.

(b) Using the photograph, measure the horizontal width of the colored band at the upper portion of each of the three test objects located at positions A, B, and C in Figure 5.

(c) Define the measured horizontal widths of the colored bands of the three test objects as d_a, d_b, and d_c.

S14.1.8.2 *Obtain scaling factor.* Using the apparent length of the 50 mm portion of the ruler as it appears in the photograph, divide this apparent length by 50 mm to obtain a scaling factor. Define this scaling factor as s_{scale}.

S14.1.8.3 *Determine viewing distance.* Determine the actual distance from the rotated eye midpoint location (M_r) to the center of the rearview image. Define this viewing distance as a_{eye}.

S14.1.8.4 *Calculate visual angle subtended by test objects.* Use the following equation to calculate the subtended visual angles:

$$\theta_i = 60 \sin^{-1}\left(\frac{d_i}{a_{eye} s_{scale}}\right)$$

where *i* can take on the value of either *test object A, B,* or *C,* and arcsine is calculated in units of degrees.

S14.2 *Image response time test procedure.* The temperature inside the vehicle during this test is any temperature between 15°C and 25°C. Immediately prior to commencing the actions listed in subparagraphs (a)–(c) of this paragraph, all components of the rear visibility system are in a powered off state. Then:

(a) Open the driver's door to any width,

(b) Close the driver's door

(c) Activate the starting system using the key, and

(d) Select the vehicle's reverse direction at any time not less than 4.0 seconds and not more than 6.0 seconds after the driver's door is opened. The driver door is open when the edge of the driver's door opposite of the door's hinge is no longer flush with the exterior body panel.

S14.3 *Durability test procedures.* For the durability tests specified in S14.3.1, S14.3.2, and S14.3.3, the external components are mounted on an environmental test fixture.

S14.3.1 *Corrosion test procedure.* The external components are subjected to two 24-hour corrosion test cycles. In each corrosion test cycle, the external components are subjected to a salt spray (fog) test in accordance with ASTM

B117–03 (incorporated by reference, see § 571.5) for a period of 24 hours. Allow 1 hour to elapse without spray between the two test cycles.

S14.3.2 *Humidity exposure test procedure.* The external components are subjected to 24 consecutive 3-hour humidity test cycles. In each humidity test cycle, external components are subjected to a temperature of 100°+7° − 0° F (38°+4° − 0° C) with a relative humidity of not less than 90% for a period of 2 hours. After a period not to exceed 5 minutes, the external components are subjected to a temperature of 32° +5° − 0 °F (0° +3° − 0° C) and a humidity of not more than 30% ± 10% for 1 hour. Allow no more than 5 minutes to elapse between each test cycle.

S14.3.3 *Temperature exposure test procedure.* The external components are subjected to 4 consecutive 2-hour temperature test cycles. In each temperature test cycle, the external components are first subjected to a temperature of 176° ± 5 °F (80° ± 3° C) for a period of one hour. After a period not to exceed 5 minutes, the external components are subjected to a temperature of 32° +5° − 0 °F (0° +3° -0° C) for 1 hour. Allow no more than 5 minutes to elapse between each test cycle.

BILLING CODE 4910–59–P

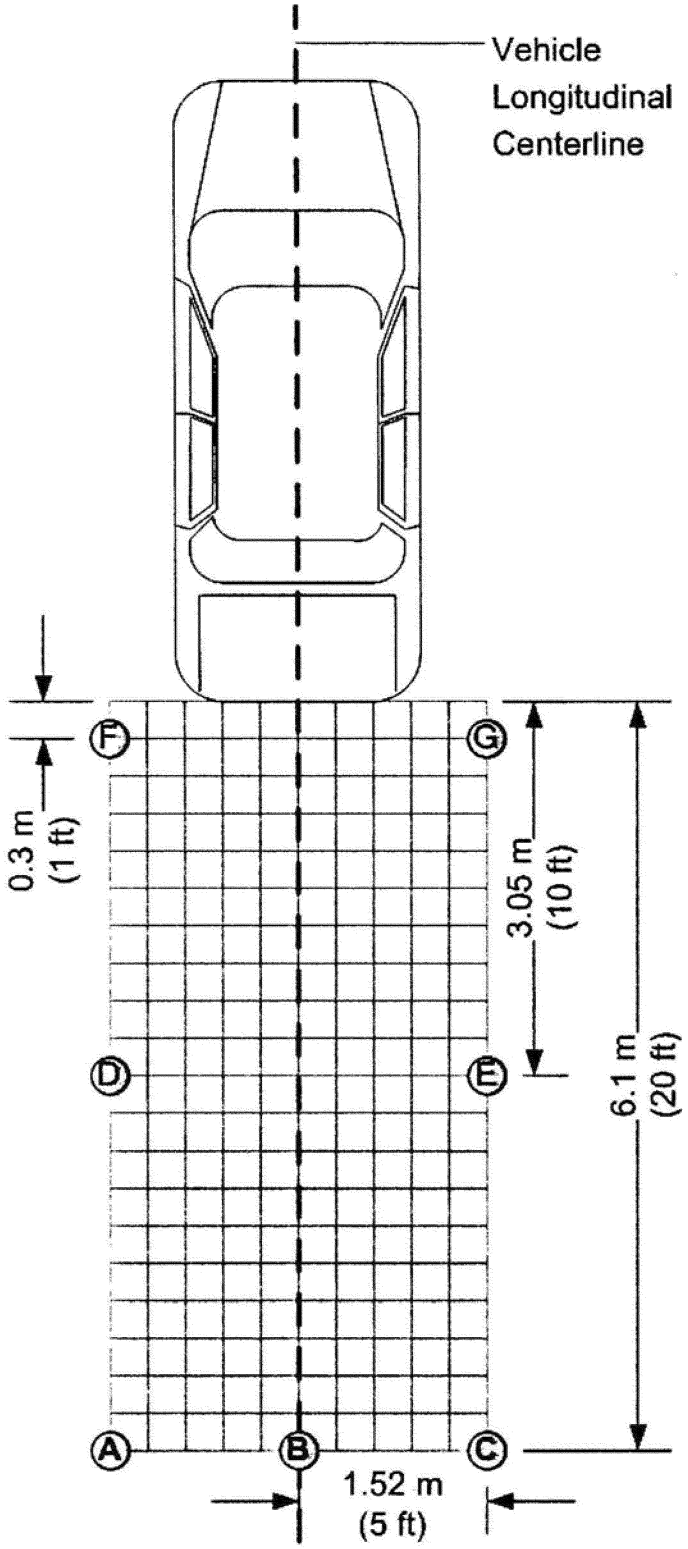

FIGURE 5: TEST CYLINDER LOCATIONS

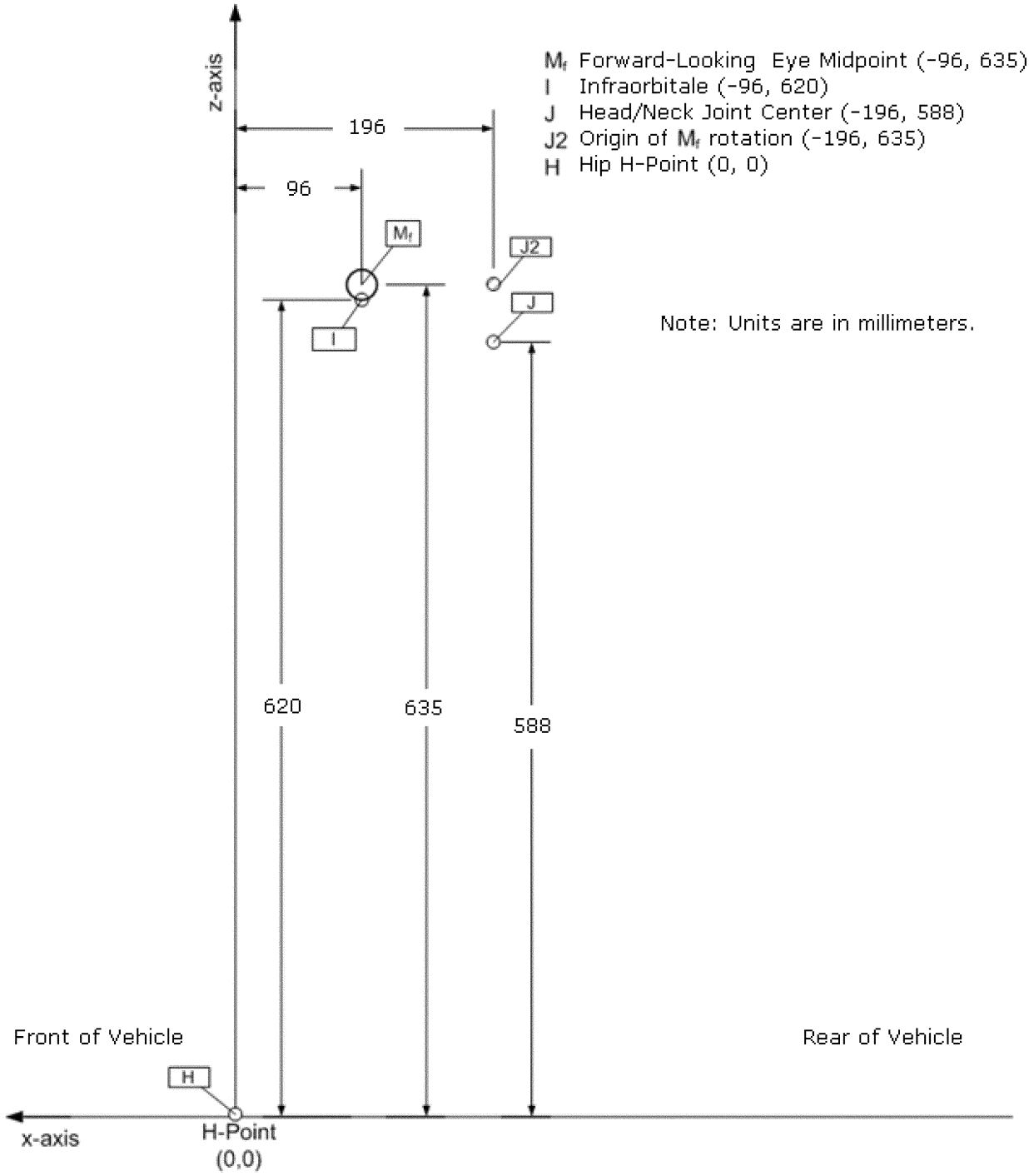

FIGURE 6: EYE MIDPOINT LOCATION (M_f) IN THE MID-SAGITTAL PLANE WITH RESPECT TO H POINT FOR FORWARD-LOOKING 50TH PERCENTILE MALE DRIVER SEATED WITH 25 DEGREE SEAT BACK ANGLE

BILLING CODE 4910–59–C

S15 *Rear visibility phase-in schedule.* For the purposes of the requirements in S15.1 through S15.7, production year means the 12-month period between May 1 of one year and April 30 of the following year, inclusive.

S15.1 *Vehicles manufactured on or after May 1, 2016 and before May 1, 2018.* At any time during or after the production years ending April 30, 2017 and April 30, 2018, each manufacturer shall, upon request from the Office of Vehicle Safety Compliance, provide information identifying the vehicles (by make, model and vehicle identification number) that have been certified as complying with S5.5.1 or S6.2.1 of this standard. The manufacturer's designation of a vehicle as a certified vehicle is irrevocable.

S15.2 *Vehicles manufactured on or after May 1, 2016 and before May 1, 2017.* Except as provided in S15.4, for passenger cars, multipurpose passenger vehicles, trucks, buses, and low-speed vehicles with a GVWR of 4,536 kg or less, manufactured by a manufacturer on or after May 1, 2016, and before May

1, 2017, the number of such vehicles complying with S5.5.1 or S6.2.1 shall be not less than 10 percent of the manufacturer's—

(a) Production of such vehicles during that period; or

(b) Average annual production of such vehicles manufactured in the three previous production years.

S15.3 *Vehicles manufactured on or after May 1, 2017 and before May 1, 2018.* Except as provided in S15.4, for passenger cars, multipurpose passenger vehicles, trucks, buses, and low-speed vehicles with a GVWR of 4,536 kg or less, manufactured by a manufacturer on or after May 1, 2017, and before May 1, 2018, the number of such vehicles complying with S5.5.1 or S6.2.1 shall be not less than 40 percent of the manufacturer's—

(a) Production of such vehicles during that period; or

(b) Average annual production of such vehicles manufactured in the three previous production years.

S15.4 *Exclusions from phase-in.* The following vehicles shall not be subject to the requirements in S15.1 through S15.3 but shall achieve full compliance with this standard at the end of the phase-in period in accordance with S5.5(b) and S6.2(b):

(a) Vehicles that are manufactured by small manufacturers or by limited line manufacturers.

(b) Vehicles that are altered (within the meaning of *49 CFR 567.7*) before May 1, 2017, after having been previously certified in accordance with part 567 of this chapter, and vehicles manufactured in two or more stages before May 1, 2018.

S15.5 *Vehicles produced by more than one manufacturer.* For the purpose of calculating average annual production of vehicles for each manufacturer and the number of vehicles manufactured by each manufacturer under S15.1 through S15.3, a vehicle produced by more than one manufacturer shall be attributed to a single manufacturer as follows, subject to S15.6—

(a) A vehicle that is imported shall be attributed to the importer.

(b) A vehicle manufactured in the United States by more than one manufacturer, one of which also markets the vehicle, shall be attributed to the manufacturer that markets the vehicle.

S15.6 A vehicle produced by more than one manufacturer shall be attributed to any one of the vehicle's manufacturers specified by an express written contract, reported to the National Highway Traffic Safety Administration under 49 CFR part 585, between the manufacturer so specified and the manufacturer to which the vehicle would otherwise be attributed under S15.5.

S15.7 *Calculation of complying vehicles.*

(a) For the purposes of calculating the vehicles complying with S15.2, a manufacturer may count a vehicle if it is manufactured on or after May 1, 2016 but before May 1, 2017.

(b) For purposes of complying with S15.3, a manufacturer may count a vehicle if it is manufactured on or after May 1, 2017 but before May 1, 2018 and,

(c) For the purposes of calculating average annual production of vehicles for each manufacturer and the number of vehicles manufactured by each manufacturer, each vehicle that is excluded from having to meet the applicable requirement is not counted.

■ 4. Section 571.500 is amended by adding S5(b)(11) to read as follows:

§ 571.500 Standard No. 500; Low-speed vehicles.

* * * * *

S5. * * *

(b) * * *

(11) Low-speed vehicles shall comply with the rear visibility requirements specified in paragraphs S6.2 of FMVSS No. 111.

PART 585—PHASE–IN REPORTING REQUIREMENTS

■ 5. The authority citation for part 585 is revised to read as follows:

Authority: 49 U.S.C. 322, 30111, 30115, 30117, and 30166; delegation of authority at 49 CFR 1.95.

■ 6. Add Subpart M to Part 585 to read as follows:

Subpart M—Rear Visibility Improvements Reporting Requirements

Sec.

585.121 Scope.
585.122 Purpose.
585.123 Applicability.
585.124 Definitions.
585.125 Response to inquiries.
585.126 Reporting requirements.
585.127 Records.

Subpart M—Rear Visibility Improvements Reporting Requirements

§ 585.121 Scope.

This part establishes requirements for manufacturers of passenger cars, of trucks, buses, multipurpose passenger vehicles and low-speed vehicles with a gross vehicle weight rating (GVWR) of 4,536 kilograms (kg) (10,000 pounds (lb)) or less, to submit a report, and maintain records related to the report, concerning the number of such vehicles that meet the rear visibility requirements in paragraphs S5.5 and S6.2 of Standard No. 111, Rear visibility (49 CFR 571.111).

§ 585.122 Purpose.

The purpose of these reporting requirements is to assist the National Highway Traffic Safety Administration in determining whether a manufacturer has complied with the rear visibility requirements in paragraphs S5.5 and S6.2 of Standard No. 111, Rear visibility (49 CFR 571.111).

§ 585.123 Applicability.

This part applies to manufacturers of passenger cars, of trucks, buses, multipurpose passenger vehicles and low-speed vehicles with a gross vehicle weight rating (GVWR) of 4,536 kilograms (kg) (10,000 pounds (lb)) or less.

§ 585.124 Definitions.

(a) All terms defined in 49 U.S.C. 30102 are used in their statutory meaning.

(b) Bus, gross vehicle weight rating or GVWR, low-speed vehicle, multipurpose passenger vehicle, passenger car, and truck are used as defined in § 571.3 of this chapter.

(c) Production year means the 12-month period between May 1 of one year and April 30 of the following year, inclusive.

§ 585.125 Response to inquiries.

At anytime during the production years ending April 30, 2017, and April 30, 2018, each manufacturer shall, upon request from the Office of Vehicle Safety Compliance, provide information identifying the vehicles (by make, model and vehicle identification number) that have been certified as complying with the rear visibility requirements in paragraphs S5.5 and S6.2 of Standard No. 111, Rear visibility (49 CFR 571.111). The manufacturer's designation of a vehicle as a certified vehicle is irrevocable.

§ 585.126 Reporting requirements.

(a) *Phase-in reporting requirements.* Within 60 days after the end of each of the production years ending April 30, 2017 and April 30, 2018, each manufacturer shall submit a report to the National Highway Traffic Safety Administration concerning its compliance with the rear visibility requirements in paragraphs S5.5 and S6.2 of Standard No. 111 (49 CFR 571.111) for its vehicles produced in that year. Each report shall provide the

information specified in paragraph (b) of this section and in § 585.2 of this part.

(b) *Phase-in report content*— (1) *Basis for phase-in production goals.* Each manufacturer shall provide the number of vehicles manufactured in the current production year, or, at the manufacturer's option, in each of the three previous production years. A new manufacturer that is, for the first time, manufacturing vehicles for sale in the United States must report the number of vehicles manufactured during the current production year.

(2) *Production of complying vehicles.* Each manufacturer shall report, for the production year being reported on, information on the number of vehicles that meet the rear visibility requirements in paragraphs S5.5 and S6.2 of Standard No. 111 (49 CFR 571.111).

§ 585.127 Records.

Each manufacturer shall maintain records of the Vehicle Identification Number for each vehicle for which information is reported under § 585.126 until April 30, 2022.

Issued in Washington DC, on March 31, 2014 under authority delegated in 49 CFR part 1.95.

David J. Friedman,

Acting Administrator.

[FR Doc. 2014–07469 Filed 4–1–14; 4:15 pm]

BILLING CODE 4910–59–P

FEDERAL REGISTER

Vol. 79 Monday,

No. 66 April 7, 2014

Part III

Department of Commerce

National Oceanic and Atmospheric Administration

Takes of Marine Mammals Incidental to Specified Activities; Taking Marine Mammals Incidental to Buccaneer Energy Drilling Activities in Upper Cook Inlet, 2014; Notice

DEPARTMENT OF COMMERCE

National Oceanic and Atmospheric Administration

RIN 0648–XD165

Takes of Marine Mammals Incidental to Specified Activities; Taking Marine Mammals Incidental to Buccaneer Energy Drilling Activities in Upper Cook Inlet, 2014

AGENCY: National Marine Fisheries Service (NMFS), National Oceanic and Atmospheric Administration (NOAA), Commerce.

ACTION: Notice; proposed incidental harassment authorization; request for comments.

SUMMARY: NMFS has received an application from Buccaneer Alaska Operation, LLC (Buccaneer) for an Incidental Harassment Authorization (IHA) to take marine mammals, by harassment, incidental to conducting a multi-well offshore exploratory drilling program in upper Cook Inlet during the 2014 open water season. Pursuant to the Marine Mammal Protection Act (MMPA), NMFS is requesting comments on its proposal to issue an IHA to Buccaneer to incidentally take, by Level B harassment only, marine mammals during the specified activity.

DATES: Comments and information must be received no later than May 7, 2014.

ADDRESSES: Comments on the application should be addressed to Jolie Harrison, Supervisor, Incidental Take Program, Permits and Conservation Division, Office of Protected Resources, National Marine Fisheries Service, 1315 East-West Highway, Silver Spring, MD 20910. The mailbox address for providing email comments is *ITP.Nachman@noaa.gov.* NMFS is not responsible for email comments sent to addresses other than the one provided here. Comments sent via email, including all attachments, must not exceed a 25-megabyte file size.

Instructions: All comments received are a part of the public record and will generally be posted to *http://www.nmfs.noaa.gov/pr/permits/incidental.htm* without change. All Personal Identifying Information (e.g., name, address) voluntarily submitted by the commenter may be publicly accessible. Do not submit Confidential Business Information or otherwise sensitive or protected information.

An electronic copy of the application containing a list of the references used in this document may be obtained by writing to the address specified above, telephoning the contact listed below (see **FOR FURTHER INFORMATION CONTACT**), or visiting the internet at: *http://www.nmfs.noaa.gov/pr/permits/incidental.htm.* Documents cited in this notice may also be viewed, by appointment, during regular business hours, at the aforementioned address.

FOR FURTHER INFORMATION CONTACT: Candace Nachman, Office of Protected Resources, NMFS, (301) 427–8401.

SUPPLEMENTARY INFORMATION:

Background

Sections 101(a)(5)(A) and (D) of the MMPA (16 U.S.C. 1361 *et seq.*) direct the Secretary of Commerce to allow, upon request, the incidental, but not intentional, taking of small numbers of marine mammals by U.S. citizens who engage in a specified activity (other than commercial fishing) within a specified geographical region if certain findings are made and either regulations are issued or, if the taking is limited to harassment, a notice of a proposed authorization is provided to the public for review.

Authorization for incidental takings shall be granted if NMFS finds that the taking will have a negligible impact on the species or stock(s), will not have an unmitigable adverse impact on the availability of the species or stock(s) for subsistence uses (where relevant), and if the permissible methods of taking, other means of effecting the least practicable impact on the species or stock and its habitat, and requirements pertaining to the mitigation, monitoring and reporting of such takings are set forth. NMFS has defined ''negligible impact'' in 50 CFR 216.103 as ''. . . an impact resulting from the specified activity that cannot be reasonably expected to, and is not reasonably likely to, adversely affect the species or stock through effects on annual rates of recruitment or survival.''

Except with respect to certain activities not pertinent here, the MMPA defines ''harassment'' as: ''Any act of pursuit, torment, or annoyance which (i) has the potential to injure a marine mammal or marine mammal stock in the wild [Level A harassment]; or (ii) has the potential to disturb a marine mammal or marine mammal stock in the wild by causing disruption of behavioral patterns, including, but not limited to, migration, breathing, nursing, breeding, feeding, or sheltering [Level B harassment].''

Summary of Request

On August 30, 2013, NMFS received an IHA application from Buccaneer for the taking of marine mammals incidental to a multi-well, multi-year offshore exploratory drilling program in upper Cook Inlet during the 2014 open water season (typically mid-April through October). This request was for 1-year of the program. NMFS determined that the application was adequate and complete on November 25, 2013. However, on February 13, 2014, Buccaneer informed NMFS that a portion of the activity contained in the application is no longer proposed. As described in more detail below, Buccaneer proposes to drill four wells instead of six during this multi-year program.

Buccaneer proposes to drill up to four exploratory wells during this multi-year program and will likely drill up to two wells each year at locations in upper Cook Inlet. The proposed activity for this IHA (if issued) would occur during the open water months in 2014, which is typically from April through October. The following specific aspects of the proposed activities are likely to result in the take of marine mammals: Driving of the conductor pipe; exploratory drilling; towing of the jack-up drill rig; and vertical seismic profiling (VSP). Take, by Level B harassment only, of six marine mammal species is anticipated to result from the specified activity.

Description of the Specified Activity

Overview

Buccaneer proposes to conduct exploratory drilling operations at multiple well sites in upper Cook Inlet during the 2014 summer and fall open water (ice-free) season, using the *Endeavour-Spirit of Independence* (*Endeavour*) jack-up drill rig. The rig will be towed between drilling locations and winter moorage by ocean-going tugs. The activities of relevance to this IHA request include: Mobilization and demobilization of the drill rig to and from the well locations at the start and end of the season; driving of the conductor pipe; exploratory drilling; and VSP seismic operations. Buccaneer proposes to utilize both helicopters and vessels to conduct resupply, crew change, and other logistics during the exploratory drilling program.

Dates and Duration

The 2014 exploratory drilling program (which is the subject of this IHA request) would occur during the 2014 open water season (April 15 through October 31). Drilling will take approximately 30 to 75 days per well, and well testing will take another 7 to 15 days per well. Buccaneer proposes to drill at up to two well locations in 2014 in upper Cook Inlet. During this time period, conductor pipe driving would only occur for a period of 1 to 3 days

at each location, and VSP seismic operations would only occur for a period of less than 1 to 2 days at each location. The rig tows will take approximately 2 days to complete during mobilization and demobilization from upper Cook Inlet, and the shorter tow between the two well locations in upper Cook Inlet will take a few hours. This IHA (if issued) would be effective from date of issuance through October 31, 2014.

Specified Geographic Region

Buccaneer's proposed program would occur at up to two of four possible well locations in upper Cook Inlet. The Tyonek Deep well sites are the priority for the 2014 season. However, we are analyzing that activity could occur at either Tyonek Deep #1, Tyonek Deep #2, Southern Cross #1, or Southern Cross #2 to allow for operational flexibility. Figure 1 in Buccaneer's IHA application depicts the location of these four well sites. All of these wells are located in State of Alaska oil and gas leases in Cook Inlet.

Detailed Description of Activities

1. Drill Rig Mobilization and Towing

Buccaneer proposes to conduct the exploratory drilling program using the *Endeavour,* which is an independent leg, cantilevered jack-up drill rig of the *Marathon LeTourneau* Class 116–C and is capable of drilling up to 25,000 ft in water depths from 15–300 ft. Additional specifications can be found in Appendix A of the IHA application. The rig will be towed between drilling locations and winter moorage by ocean-going tugs licensed to operate in Cook Inlet. While under tow, the rig operations will be monitored by Buccaneer and the drilling contractor management, both aboard the rig and onshore.

The jack-up rig would be towed up to three times during the summer and fall seasons of 2014. It is estimated that the longer tows will take 2 days to complete, while the shorter tows between the upper Cook Inlet wells will take but a few hours (distance between the two wells is less than 5 miles).

The rig will be wet-towed by two or three ocean-going tugs licensed to operate in the Cook Inlet. Tugs generate their loudest sounds while towing due to propeller cavitation. While these continuous sounds have been measured at up to 171 dB re 1 μPa-m (rms) at 1-meter source (broadband), they are generally emitted at dominant frequencies of less than 5 kHz (Miles *et al.,* 1987; Richardson *et al.,* 1995, Simmonds *et al.,* 2004). The distance to the 120-dB isopleth, assuming a 171 dB source, is 1,715 feet (523 meters) using Collins *et al.*'s (2007) 171–18.4 Log(R)—0.00188 R spreading model developed from Cook Inlet. For the most part, the dominant noise frequencies from propeller cavitation are significantly lower than the dominant hearing frequencies for pinnipeds and toothed whales, including beluga whales (Wartzok and Ketten, 1999).

2. Conductor Pipe Driving

A conductor pipe is a relatively short, large-diameter pipe driven into the sediment prior to the drilling of oil wells. This section of tubing serves to support the initial sedimentary part of the well, preventing the looser surface layer from collapsing and obstructing the wellbore. The pipe also facilitates the return of cuttings from the drill head. Conductor pipes are usually installed using drilling, pile driving, or a combination of these techniques. In offshore wells, the conductor pipe is also used as a foundation for the wellhead. Buccaneer proposes to drive approximately 300 ft (90 m) of 30-inch conductor pipe at each of the upper Cook Inlet wells prior to drilling using a Delmar D62–22 impact hammer. This hammer has impact weight of 13,640 pounds (6,200 kg) and reaches a maximum impact energy of 165,215 foot-pounds (224 kilonewton-meters) at a drop height of 12 feet (3.6 meters).

Blackwell (2005) measured the noise produced by a Delmar D62–22 driving 36-inch steel pipe in upper Cook Inlet and found sound pressure levels to exceed 190 dB re 1μPa-m (rms) at about 200 ft (60 m), 180 dB re 1μPa-m (rms) at about 820 ft (250 m), and 160 dB re 1μPa-m (rms) at just less than 1.2 mi (1.9 km). Each conductor pipe driving event is expected to last 1 to 3 days, although actual sound generation (pounding) would occur only intermittently during this period.

3. Exploratory Drilling and Standard Operation

The jack-up drilling rig *Endeavour*'s drilling platform and other noise-generating equipment is located above the sea's surface, and there is very little surface contact with the water compared to drill ships and semi-submersible drill rigs; therefore, lattice-legged jack-up drill rigs are relatively quiet (Richardson *et al.,* 1995; Spence *et al.,* 2007).

The *Spartan 151,* the only other jack-up drilling rig operating in the Cook Inlet, was hydro-acoustically measured by Marine Acoustics, Inc. (2011) while operating in 2011. The survey results showed that continuous noise levels exceeding 120 dB re 1μPa extended out only 164 ft (50 m), and that this sound was largely associated with the diesel engines used as hotel power generators.

The *Endeavour* was hydro-acoustically tested during drilling activities by Illingworth and Rodkin (2013a) in May 2013 while the rig was operating at a lower Cook Inlet well site (Cosmopolitan #1). The results from the sound source verification indicated that noise generated from drilling or generators were below ambient sound levels. The generators used on the *Endeavour* are mounted on pedestals specifically to reduce noise transfer through the infrastructure, and they are enclosed in an insulated engine room, which may further have reduced underwater sound transmission to levels below those generated by the *Spartan 151.* Also, as mentioned above, the lattice legs limit transfer of noise generated from the drilling table to the water.

The sound source verification revealed that the submersed deep-well pumps that charge the fire-suppression system and cool the generators (in a closed water system) generate sound levels exceeding 120 dB re 1μPa out a distance of approximately 984 ft (300 m). It was not clear at the time of measurements whether the sound was a direct result of the pumps or was from the systems discharge water falling approximately 40 ft (12 m) from the deck. Thus, after the falling water was enclosed in pipe extending below the water surface in an effort to reduce sound levels, the pump noise levels were re-measured in June 2013 (I&R, 2013b) with results indicating that piping the falling water had a modicum of effect on reducing underwater sound levels; nevertheless, the 120-dB radius still extended out to 853 ft (260 m) in certain directions. Thus, neither drilling operations nor running generators on the *Endeavour* drill rig generate underwater sound levels exceeding 120 dB re 1μPa. However, the *Endeavour*'s submersed deep-well pumps generate continuous sound exceeding 120 dB re 1μPa to a maximum distance of 853 ft (260 m).

4. Vertical Seismic Profiling

Once a well is drilled, accurate follow-up seismic data can be collected by placing a receiver at known depths in the borehole and shooting a seismic airgun at the surface near the borehole. This gathered data provides not only high resolution images of the geological layers penetrated by the borehole but can be used to accurately correlate (or correct) the original surface seismic data. The procedure is known as VSP.

Buccaneer intends to conduct VSP operations at the end of drilling each

well using an array of airguns with total volumes of between 600 and 880 cubic inches (in^3). Each VSP operation is expected to last less than 1 or 2 days. Assuming a 1-meter source level of 227 dB re 1μPa (based on manufacturer's specifications) for an 880 in^3 array and using Collins *et al.*'s (2007) transmission loss model for Cook Inlet (227—18.4 Log(R)—0.00188), the 190 dB radius from the source was estimated at 330 ft (100 m), the 180 dB radius at 1,090 ft (332 m), and the 160 dB radius at 1.53 mi (2.46 km).

Illingworth and Rodkin (2013c) measured the underwater sound levels associated with the July 2013 VSP operation using a 720 in^3 array and found sound levels exceeding 160 dB re 1 μPa (rms) extended out 1.54 mi (2.47 km), virtually identical to the modeled distance. The measured radius to 190 dB was 246 ft (75 m) and to 180 dB was 787 ft (240 m). The best fit model for the empirical data was 227—19.75 log(R)—0.0 (I&R 2013c).

5. Helicopter and Supply Vessel Support

Helicopter logistics for project operations will include transportation for personnel, groceries, and supplies. Helicopter support will consist of a twin turbine Bell 212 (or equivalent) helicopter certified for instrument flight rules land and over water operations. Helicopter crews and support personnel will be housed in existing Kenai area facilities. The helicopter will be based at the Kenai Airport to support rig crew changes and cargo handling. Fueling will take place at these facilities. No helicopter refueling will take place on the rig.

Helicopter flights to and from the rig are expected to average two per day. Flight routes will follow a direct route to and from the rig location, and flight heights will be maintained 1,000 to 1,500 feet above ground level to avoid take of marine mammals (Richardson *et al.,* 1995). At these altitudes, there are not expected to be impacts from sound generation on marine mammals. The aircraft will be dedicated to the drilling operation and will be available for service 24 hours per day. A replacement aircraft will be available when major maintenance items are scheduled.

Major supplies will be staged on-shore at the Kenai OSK Dock. Required supplies and equipment will be moved from the staging area by contracted supply vessels and loaded aboard the rig when the rig is established on a drilling location. Major supplies will include fuel, drilling water, mud materials, cement, casing, and well service equipment. Supply vessels also will be outfitted with fire-fighting systems as part of fire prevention and control as required by Cook Inlet Spill Prevention and Response, Inc. The specific supply vessels have not been identified; however, typical offshore drilling support work vessels are of steel construction with strengthened hulls to give the capability of working in extreme conditions. Additional information about logistics and fuel and waste management can be found in Section 1.2 of Buccaneer's IHA application.

Description of Marine Mammals in the Area of the Specified Activity

The marine mammal species under NMFS's jurisdiction that could occur near the exploratory drilling sites in upper Cook Inlet include two cetacean species, both odontocetes (toothed whales): beluga whale (*Delphinapterus leucas*) and harbor porpoise (*Phocoena phocoena*) and one pinniped species: harbor seal (*Phoca vitulina richardsi*). The marine mammal species that is likely to be encountered most widely (in space and time) throughout the period of the planned surveys is the harbor seal. While killer whales (*Orcinus orca*) and Steller sea lions (*Eumetopias jubatus*) have been sighted in upper Cook Inlet, their occurrence is considered rare in that portion of the Inlet. There have also been a few sightings in the last couple of years of gray whales (*Eschrichtius robustus*) in the upper inlet; however occurrence is rare. Gray whales, killer whales, Steller sea lions, minke whales (*Balaenoptera acutorostrata*), and Dall's porpoises (*Phocoenoides dalli*) are more likely to occur in lower Cook Inlet (where rig towing would occur).

Of these marine mammal species, Cook Inlet beluga whales and the western distinct population segment (DPS) of Steller sea lions are listed as endangered under the Endangered Species Act (ESA). The eastern DPS was recently removed from the endangered species list (78 FR 66139, November 4, 2013) but currently retains its status as ''depleted'' under the MMPA along with the western DPS and Cook Inlet beluga whales.

Despite these designations, Cook Inlet beluga whales and the western DPS of Steller sea lions have not made significant progress towards recovery. Data indicate that the Cook Inlet population of beluga whales has been decreasing at a rate of 1.1 percent annually between 2001 and 2011 (Allen and Angliss, 2013). A recent review of the status of the population indicated that there is an 80% chance that the population will decline further (Hobbs and Shelden 2008). Counts of non-pup Steller sea lions at trend sites in the Alaska western stock increased 11% from 2000 to 2004 (Allen and Angliss, 2013). These were the first region-wide increases for the western stock since standardized surveys began in the 1970s and were due to increased or stable counts in all regions except the western Aleutian Islands. Between 2004 and 2008, Alaska western non-pup counts increased only 3%: eastern Gulf of Alaska (Prince William Sound area) counts were higher and Kenai Peninsula through Kiska Island counts were stable, but western Aleutian counts continued to decline. Johnson (2010) analyzed western Steller sea lion population trends in Alaska and concluded that the overall 2000–2008 trend was a decline 1.5% per year; however, there continues to be considerable regional variability in recent trends (Allen and Angliss, 2013). NMFS has not been able to complete a non-pup survey of the AK western stock since 2008, due largely to weather and closure of the Air Force base on Shemya in 2009 and 2010.

Pursuant to the ESA, critical habitat has been designated for Cook Inlet beluga whales and Steller sea lions. The proposed action falls within critical habitat designated in Cook Inlet for beluga whales but is not within critical habitat designated for Steller sea lions. Buccaneer's Southern Cross and Tyonek Deep well sites occur in areas identified as Area 2 in the critical habitat designation. The wells are located south of the Area 1 critical habitat designation where belugas are particularly vulnerable to impacts due to their high seasonal densities and the biological importance of the area for foraging, nursery, and predator avoidance. Area 2 is based on dispersed fall and winter feeding and transit areas in waters where whales typically appear in smaller densities or deeper waters (76 FR 20180, April 11, 2011).

Buccaneer did not request take of beluga whales or Steller sea lions. Informal consultation pursuant to section 7 of the ESA was conducted for this project, and it was determined that the activity is not likely to adversely affect listed species or critical habitat based upon the nature of the activities and specific mitigation measures to ensure that take of these species or adverse habitat impacts are unlikely. This is discussed further in the ''Proposed Mitigation'' section later in this document.

Other species of mysticetes that have been observed infrequently in lower Cook Inlet include: humpback whale (*Megaptera novaeangliae*) and fin whale (*Balaenoptera physalus*). Because of

their infrequent occurrence Cook Inlet, they are not included in this proposed IHA notice. Sea otters also occur in Cook Inlet. However, sea otters are managed by the U.S. Fish and Wildlife Service and are therefore not considered further in this proposed IHA notice. Information summaries for the species for which take is requested is provided next.

Cetaceans

1. Killer Whales

In general, killer whales are rare in upper Cook Inlet, where transient killer whales are known to feed on beluga whales, and resident killer whales are known to feed on anadromous fish (Shelden *et al.,* 2003). The availability of these prey species largely determines the likeliest times for killer whales to be in the area. Between 1993 and 2004, 23 sightings of killer whales were reported in the lower Cook Inlet during aerial surveys by Rugh *et al.* (2005). Surveys conducted over a span of 20 years by Shelden *et al.* (2003) reported 11 sightings in upper Cook Inlet between Turnagain Arm, Susitna Flats, and Knik Arm. No killer whales were spotted during recent surveys by Funk *et al.* (2005), Ireland *et al.* (2005), Brueggeman *et al.* (2007a, 2007b, 2008), or Prevel Ramos *et al.* (2006, 2008). Eleven killer whale strandings have been reported in Turnagain Arm, six in May 1991 and five in August 1993. Therefore, very few killer whales, if any, are expected to approach or be in the vicinity of the action area.

2. Harbor Porpoise

The most recent estimated density for harbor porpoises in Cook Inlet is 7.2 per 1,000 km^2 (Dahlheim *et al.,* 2000) indicating that only a small number use Cook Inlet. Harbor porpoise have been reported in lower Cook Inlet from Cape Douglas to the West Foreland, Kachemak Bay, and offshore (Rugh *et al.,* 2005). Small numbers of harbor porpoises have been consistently reported in upper Cook Inlet between April and October, except for a recent survey that recorded higher than usual numbers (Prevel Ramos *et al.,* 2008). Prevel Ramos *et al.* (2008) reported 17 harbor porpoises from spring to fall 2006, while other studies reported 14 in the spring of 2007 (Brueggeman *et al.* 2007) and 12 in the fall of 2007 (Brueggeman *et al.* 2008). During the spring and fall of 2007, 129 harbor porpoises were reported between Granite Point and the Susitna River; however, the reason for the increase in numbers of harbor porpoise in the upper Cook Inlet remains unclear and the disparity with the result of past sightings suggests that it may be an anomaly. The spike in reported sightings occurred in July, which was followed by sightings of 79 harbor porpoises in August, 78 in September, and 59 in October 2007. It is important to note that the number of porpoises counted more than once was unknown, which suggests that the actual numbers are likely smaller than those reported. In addition, recent passive acoustic research in Cook Inlet by the Alaska Department of Fish and Game and the National Marine Mammal Laboratory have indicated that harbor porpoises occur in the area more frequently than previously thought, particularly in the West Foreland area in the spring (NMFS 2011); however overall numbers are still unknown at this time.

3. Gray Whale

The gray whale is a large baleen whale known to have one of the longest migrations of any mammal. This whale can be found all along the shallow coastal waters of the North Pacific Ocean.

The Eastern North Pacific stock, which includes those whales that travel along the coast of Alaska, was delisted from the ESA in 1994 after a distinction was made between the western and eastern populations (59 FR 31094, June 16, 1994). It is estimated that approximately 18,000 individuals exist in the eastern stock (Allen and Angliss, 2012).

Although observations of gray whales are rare within Cook Inlet, marine mammal observers noted individual gray whales on nine occasions in upper Cook Inlet in 2012 while conducting marine mammal monitoring for seismic survey activities under an IHA NMFS issued to Apache Alaska Corporation: four times in May; twice in June; and three times in July (Apache, 2013). Annual surveys conducted by NMFS in Cook Inlet since 1993 have resulted in a total of five gray whale sightings (Rugh *et al.,* 2005). Although Cook Inlet is not believed to comprise either essential feeding or social ground, and gray whales are typically not observed within upper Cook Inlet, there may be some encounters in lower Cook Inlet during towing activities and perhaps an incidental encounter in the upper Inlet.

4. Minke Whale

Minke whales are the smallest of the rorqual group of baleen whales. There are no population estimates for the North Pacific, although estimates have been made for some portions of Alaska. Zerbini *et al.* (2006) estimated the coastal population between Kenai Fjords and the Aleutian Islands at 1,233 animals. During Cook Inlet-wide aerial surveys conducted from 1993 to 2004, minke whales were encountered only twice (1998, 1999), both times off Anchor Point 16 mi northwest of Homer. A minke whale was also reported off Cape Starichkof in 2011 (A. Holmes, pers. comm.) and 2013 (E. Fernandez and C. Hesselbach, pers. comm.), suggesting this location is regularly used by minke whales, including during the winter. There are no records north of Cape Starichkof, and this species is unlikely to be seen in upper Cook Inlet. There is a chance of encountering this whale during towing operations through lower Cook Inlet.

5. Dall's Porpoise

Dall's porpoise are widely distributed throughout the North Pacific Ocean including Alaska, although they are not found in upper Cook Inlet and the shallower waters of the Bering, Chukchi, and Beaufort Seas (Allen and Angliss, 2013). The Alaskan population has been estimated at 83,400 animals (Allen and Angliss, 2013), making it one of the more common cetaceans in the state. Dall's porpoise have been observed in lower Cook Inlet, including Kachemak Bay and near Anchor Point (Glenn Johnson, pers. comm.), but sightings there are rare. There is only the remote chance that Dall's porpoise might be observed during Buccaneer towing operations through lower Cook Inlet.

Pinnipeds

1. Harbor Seals

Harbor seals inhabit the coastal and estuarine waters of Cook Inlet and are one of the more common marine mammal species in Alaskan waters. Harbor seals are non-migratory; their movements are associated with tides, weather, season, food availability, and reproduction. The major haulout sites for harbor seals are located in lower Cook Inlet, and their presence in the upper inlet coincides with seasonal runs of prey species. For example, harbor seals are commonly observed along the Susitna River and other tributaries along upper Cook Inlet during the eulachon and salmon migrations (NMFS, 2003). During aerial surveys of upper Cook Inlet in 2001, 2002, and 2003, harbor seals were observed 24 to 96 km (15 to 60 mi) south-southwest of Anchorage at the Chickaloon, Little Susitna, Susitna, Ivan, McArthur, and Beluga Rivers (Rugh *et al.,* 2005). Montgomery *et al.* (2007) recorded over 200 haulout sites in lower Cook Inlet alone. However, only a few dozen to a couple hundred seals seasonally occur in upper Cook

Inlet (Rugh *et al.,* 2005), mostly at the mouth of the Susitna River where their numbers vary in concert with the spring eulachon and summer salmon runs (Nemeth *et al.,* 2007, Boveng *et al.,* 2012). Montgomery *et al.* (2007) also found seals elsewhere in Cook Inlet to move in response to local steelhead and salmon runs. However, aerial surveys conducted in June 2013 for the proposed Susitna Dam project noted nearly 700 harbor seals in the Susitna Delta region (Alaska Energy Authority, 2013). Harbor seals may be encountered during rig tows to and from Cape Starichkof, and possibly during drilling in upper Cook Inlet.

As mentioned previously, take of marine mammals listed under the ESA will not occur because of mitigation measures to ensure no take of those species. Buccaneer's application contains information on the status, distribution, seasonal distribution, and abundance of each of the species under NMFS jurisdiction mentioned in this document. Please refer to the application for that information (see **ADDRESSES**). Additional information can also be found in the NMFS Stock Assessment Reports (SAR). The Alaska 2012 SAR is available on the Internet at: *http://www.nmfs.noaa.gov/pr/sars/pdf/ak2012.pdf.*

Potential Effects of the Specified Activity on Marine Mammals

This section includes a summary and discussion of the ways that the types of stressors associated with the specified activity (e.g., driving of the conductor pipe; exploratory drilling; towing of the jack-up drill rig; and VSP) have been observed to or are thought to impact marine mammals. This section may include a discussion of known effects that do not rise to the level of an MMPA take (for example, with acoustics, we may include a discussion of studies that showed animals not reacting at all to sound or exhibiting barely measurable avoidance). The discussion may also include reactions that we consider to rise to the level of a take and those that we do not consider to rise to the level of a take. This section is intended as a background of potential effects and does not consider either the specific manner in which this activity will be carried out or the mitigation that will be implemented or how either of those will shape the anticipated impacts from this specific activity. The ''Estimated Take by Incidental Harassment'' section later in this document will include a quantitative analysis of the number of individuals that are expected to be taken by this activity. The ''Negligible Impact Analysis'' section will include the analysis of how this specific activity will impact marine mammals and will consider the content of this section, the ''Estimated Take by Incidental Harassment'' section, the ''Mitigation'' section, and the ''Anticipated Effects on Marine Mammal Habitat'' section to draw conclusions regarding the likely impacts of this activity on the reproductive success or survivorship of individuals and from that on the affected marine mammal populations or stocks.

The likely or possible impacts of the proposed drilling program in upper Cook Inlet on marine mammals could involve both non-acoustic and acoustic stressors. Potential non-acoustic stressors could result from the physical presence of the equipment and personnel. Petroleum development and associated activities introduce sound into the marine environment. Impacts to marine mammals are expected to primarily be acoustic in nature. Potential acoustic effects on marine mammals relate to sound produced by drilling activity, conductor pipe driving, and rig towing, as well as the VSP airgun array.

Acoustic Impacts

When considering the influence of various kinds of sound on the marine environment, it is necessary to understand that different kinds of marine life are sensitive to different frequencies of sound. Based on available behavioral data, audiograms have been derived using auditory evoked potentials, anatomical modeling, and other data, Southall *et al.* (2007) designate ''functional hearing groups'' for marine mammals and estimate the lower and upper frequencies of functional hearing of the groups. The functional groups and the associated frequencies are indicated below (though animals are less sensitive to sounds at the outer edge of their functional range and most sensitive to sounds of frequencies within a smaller range somewhere in the middle of their functional hearing range):

- Low frequency cetaceans (13 species of mysticetes): Functional hearing is estimated to occur between approximately 7 Hz and 30 kHz;
- Mid-frequency cetaceans (32 species of dolphins, six species of larger toothed whales, and 19 species of beaked and bottlenose whales): Functional hearing is estimated to occur between approximately 150 Hz and 160 kHz;
- High frequency cetaceans (eight species of true porpoises, six species of river dolphins, Kogia, the franciscana, and four species of cephalorhynchids): Functional hearing is estimated to occur between approximately 200 Hz and 180 kHz;
- Phocid pinnipeds in Water: Functional hearing is estimated to occur between approximately 75 Hz and 100 kHz; and
- Otariid pinnipeds in Water: Functional hearing is estimated to occur between approximately 100 Hz and 40 kHz.

As mentioned previously in this document, six marine mammal species (five cetacean and one phocid pinniped) may occur in the exploratory drilling area or in the rig tow area. Of the five cetacean species likely to occur in the proposed project area and for which take is requested, two are classified as low-frequency cetaceans (i.e., minke and gray whales), one is classified as a mid-frequency cetacean (i.e., killer whale), and two are classified as a high-frequency cetaceans (i.e., harbor and Dall's porpoises) (Southall *et al.,* 2007). A species' functional hearing group is a consideration when we analyze the effects of exposure to sound on marine mammals.

1. Tolerance

Numerous studies have shown that underwater sounds from industry activities are often readily detectable by marine mammals in the water at distances of many kilometers. Numerous studies have also shown that marine mammals at distances more than a few kilometers away often show no apparent response to industry activities of various types (Miller *et al.,* 2005; Bain and Williams, 2006). This is often true even in cases when the sounds must be readily audible to the animals based on measured received levels and the hearing sensitivity of that mammal group. Although various baleen whales, toothed whales, and (less frequently) pinnipeds have been shown to react behaviorally to underwater sound such as airgun pulses or vessels under some conditions, at other times mammals of all three types have shown no overt reactions (e.g., Malme *et al.,* 1986; Richardson *et al.,* 1995; Madsen and Mohl, 2000; Croll *et al.,* 2001; Jacobs and Terhune, 2002; Madsen *et al.,* 2002; Miller *et al.,* 2005). Weir (2008) observed marine mammal responses to seismic pulses from a 24 airgun array firing a total volume of either 5,085 in^3 or 3,147 in^3 in Angolan waters between August 2004 and May 2005. Weir recorded a total of 207 sightings of humpback whales (n = 66), sperm whales (n = 124), and Atlantic spotted dolphins (n = 17) and reported that there were no significant differences in encounter rates (sightings/hr) for

humpback and sperm whales according to the airgun array's operational status (i.e., active versus silent). The airgun arrays used in the Weir (2008) study were much larger than the array proposed for use during the limited VSP (total discharge volumes of 600 to 880 in^3 for 1 to 2 days per well). In general, pinnipeds and small odontocetes seem to be more tolerant of exposure to some types of underwater sound than are baleen whales. Richardson *et al.* (1995b) found that vessel noise does not seem to strongly affect pinnipeds that are already in the water. Richardson *et al.* (1995b) went on to explain that seals on haul-outs sometimes respond strongly to the presence of vessels and at other times appear to show considerable tolerance of vessels.

2. Masking

Masking is the obscuring of sounds of interest by other sounds, often at similar frequencies. Marine mammals use acoustic signals for a variety of purposes, which differ among species, but include communication between individuals, navigation, foraging, reproduction, avoiding predators, and learning about their environment (Erbe and Farmer, 2000; Tyack, 2000). Masking, or auditory interference, generally occurs when sounds in the environment are louder than, and of a similar frequency as, auditory signals an animal is trying to receive. Masking is a phenomenon that affects animals that are trying to receive acoustic information about their environment, including sounds from other members of their species, predators, prey, and sounds that allow them to orient in their environment. Masking these acoustic signals can disturb the behavior of individual animals, groups of animals, or entire populations.

Masking occurs when anthropogenic sounds and signals (that the animal utilizes) overlap at both spectral and temporal scales. The sounds generated by the proposed equipment for the exploratory drilling program will consist of low frequency sources (most under 500 Hz). Lower frequency man-made sounds are more likely to affect detection of communication calls and other potentially important natural sounds such as surf and prey noise. There is little concern regarding masking near the jack-up rig during exploratory drilling operations, as the species most likely to be found in the vicinity are mid- to high-frequency cetaceans or pinnipeds and not low-frequency cetaceans. Additionally, masking is not expected to be a concern from airgun usage due to the brief duration of use (less than a day to up to 2 days per well) and the low-frequency sounds that are produced by the airguns. However, at long distances (over tens of kilometers away), due to multipath propagation and reverberation, the durations of airgun pulses can be ''stretched'' to seconds with long decays (Madsen *et al.,* 2006), although the intensity of the sound is greatly reduced.

This could affect communication signals used by low frequency mysticetes when they occur near the noise band and thus reduce the communication space of animals (e.g., Clark *et al.,* 2009) and cause increased stress levels (e.g., Foote *et al.,* 2004; Holt *et al.,* 2009); however, no baleen whales are expected to occur within the proposed action area in the upper Inlet. A few may be encountered in the lower Inlet during the rig towing. Marine mammals are thought to sometimes be able to compensate for masking by adjusting their acoustic behavior by shifting call frequencies, and/or increasing call volume and vocalization rates. For example, blue whales are found to increase call rates when exposed to seismic survey noise in the St. Lawrence Estuary (Di Iorio and Clark, 2010). The North Atlantic right whales (*Eubalaena glacialis*) exposed to high shipping noise increase call frequency (Parks *et al.,* 2007), while some humpback whales respond to low-frequency active sonar playbacks by increasing song length (Miller *el al.,* 2000). Additionally, beluga whales have been known to change their vocalizations in the presence of high background noise possibly to avoid masking calls (Au *et al.,* 1985; Lesage *et al.,* 1999; Scheifele *et al.,* 2005). Although some degree of masking is inevitable when high levels of manmade broadband sounds are introduced into the sea, marine mammals have evolved systems and behavior that function to reduce the impacts of masking. Structured signals, such as the echolocation click sequences of small toothed whales, may be readily detected even in the presence of strong background noise because their frequency content and temporal features usually differ strongly from those of the background noise (Au and Moore, 1988, 1990). The components of background noise that are similar in frequency to the sound signal in question primarily determine the degree of masking of that signal.

Redundancy and context can also facilitate detection of weak signals. These phenomena may help marine mammals detect weak sounds in the presence of natural or manmade noise. Most masking studies in marine mammals present the test signal and the masking noise from the same direction. The sound localization abilities of marine mammals suggest that, if signal and noise come from different directions, masking would not be as severe as the usual types of masking studies might suggest (Richardson *et al.,* 1995). The dominant background noise may be highly directional if it comes from a particular anthropogenic source such as a ship or industrial site. Directional hearing may significantly reduce the masking effects of these sounds by improving the effective signal-to-noise ratio. In the cases of higher frequency hearing by the bottlenose dolphin, beluga whale, and killer whale, empirical evidence confirms that masking depends strongly on the relative directions of arrival of sound signals and the masking noise (Penner *et al.,* 1986; Dubrovskiy, 1990; Bain *et al.,* 1993; Bain and Dahlheim, 1994). Toothed whales, and probably other marine mammals as well, have additional capabilities besides directional hearing that can facilitate detection of sounds in the presence of background noise. There is evidence that some toothed whales can shift the dominant frequencies of their echolocation signals from a frequency range with a lot of ambient noise toward frequencies with less noise (Au *et al.,* 1974, 1985; Moore and Pawloski, 1990; Thomas and Turl, 1990; Romanenko and Kitain, 1992; Lesage *et al.,* 1999). A few marine mammal species are known to increase the source levels or alter the frequency of their calls in the presence of elevated sound levels (Dahlheim, 1987; Au, 1993; Lesage *et al.,* 1993, 1999; Terhune, 1999; Foote *et al.,* 2004; Parks *et al.,* 2007, 2009; Di Iorio and Clark, 2009; Holt *et al.,* 2009).

These data demonstrating adaptations for reduced masking pertain mainly to the very high frequency echolocation signals of toothed whales. There is less information about the existence of corresponding mechanisms at moderate or low frequencies or in other types of marine mammals. For example, Zaitseva *et al.* (1980) found that, for the bottlenose dolphin, the angular separation between a sound source and a masking noise source had little effect on the degree of masking when the sound frequency was 18 kHz, in contrast to the pronounced effect at higher frequencies. Directional hearing has been demonstrated at frequencies as low as 0.5–2 kHz in several marine mammals, including killer whales (Richardson *et al.,* 1995a). This ability may be useful in reducing masking at these frequencies. In summary, high

levels of sound generated by anthropogenic activities may act to mask the detection of weaker biologically important sounds by some marine mammals. This masking may be more prominent for lower frequencies. For higher frequencies, such as that used in echolocation by toothed whales, several mechanisms are available that may allow them to reduce the effects of such masking.

3. Behavioral Disturbance

Behavioral responses to sound are highly variable and context-specific. Many different variables can influence an animal's perception of and response to (in both nature and magnitude) an acoustic event. An animal's prior experience with a sound or sound source affects whether it is less likely (habituation) or more likely (sensitization) to respond to certain sounds in the future (animals can also be innately pre-disposed to respond to certain sounds in certain ways; Southall *et al.,* 2007). Related to the sound itself, the perceived nearness of the sound, bearing of the sound (approaching vs. retreating), similarity of a sound to biologically relevant sounds in the animal's environment (i.e., calls of predators, prey, or conspecifics), and familiarity of the sound may affect the way an animal responds to the sound (Southall *et al.,* 2007). Individuals (of different age, gender, reproductive status, etc.) among most populations will have variable hearing capabilities and differing behavioral sensitivities to sounds that will be affected by prior conditioning, experience, and current activities of those individuals. Often, specific acoustic features of the sound and contextual variables (i.e., proximity, duration, or recurrence of the sound or the current behavior that the marine mammal is engaged in or its prior experience), as well as entirely separate factors such as the physical presence of a nearby vessel, may be more relevant to the animal's response than the received level alone.

Exposure of marine mammals to sound sources can result in (but is not limited to) no response or any of the following observable responses: Increased alertness; orientation or attraction to a sound source; vocal modifications; cessation of feeding; cessation of social interaction; alteration of movement or diving behavior; avoidance; habitat abandonment (temporary or permanent); and, in severe cases, panic, flight, stampede, or stranding, potentially resulting in death (Southall *et al.,* 2007). The biological significance of many of these behavioral disturbances is difficult to predict, especially if the detected disturbances appear minor. However, the consequences of behavioral modification have the potential to be biologically significant if the change affects growth, survival, or reproduction. Examples of significant behavioral modifications include:

- Drastic change in diving/surfacing patterns (such as those thought to be causing beaked whale stranding due to exposure to military mid-frequency tactical sonar);
- Habitat abandonment due to loss of desirable acoustic environment; and
- Cessation of feeding or social interaction.

Detailed studies regarding responses to anthropogenic sound have been conducted on humpback, gray, and bowhead whales and ringed seals. Less detailed data are available for some other species of baleen whales, sperm whales, small toothed whales, and sea otters. The following sub-sections provide examples of behavioral responses that provide an idea of the variability in behavioral responses that would be expected given the different sensitivities of marine mammal species to sound. However, baleen whales are unlikely to occur in the vicinity of the well sites and are only somewhat likely to occur in the lower portions of Cook Inlet during rig towing activities.

Baleen Whales—Richardson *et al.* (1995a) reported changes in surfacing and respiration behavior and the occurrence of turns during surfacing in bowhead whales exposed to playback of underwater sound from drilling activities. These behavioral effects were localized and occurred at distances up to 1.2–2.5 mi (2–4 km).

Richardson *et al.* (2008) reported a slight change in the distribution of bowhead whale calls in response to operational sounds on BP's Northstar Island. The southern edge of the call distribution ranged from 0.47 to 1.46 mi (0.76 to 2.35 km) farther offshore, apparently in response to industrial sound levels. This result however, was only achieved after intensive statistical analyses, and it is not clear that this represented a biologically significant effect.

Richardson *et al.* (1995a) and Moore and Clarke (2002) reviewed a few studies that observed responses of gray whales to aircraft. Cow-calf pairs were quite sensitive to a turboprop survey flown at 1,000 ft (305 m) altitude on the Alaskan summering grounds. In that survey, adults were seen swimming over the calf, or the calf swam under the adult (Ljungblad *et al.,* 1983, cited in Richardson *et al.,* 1995b and Moore and Clarke, 2002). However, when the same aircraft circled for more than 10 minutes at 1,050 ft (320 m) altitude over a group of mating gray whales, no reactions were observed (Ljungblad *et al.,* 1987, cited in Moore and Clarke, 2002). Malme *et al.* (1984, cited in Richardson *et al.,* 1995b and Moore and Clarke, 2002) conducted playback experiments on migrating gray whales. They exposed the animals to underwater noise recorded from a Bell 212 helicopter (estimated altitude=328 ft [100 m]), at an average of three simulated passes per minute. The authors observed that whales changed their swimming course and sometimes slowed down in response to the playback sound but proceeded to migrate past the transducer. Migrating gray whales did not react overtly to a Bell 212 helicopter at greater than 1,394 ft (425 m) altitude, occasionally reacted when the helicopter was at 1,000–1,198 ft (305–365 m), and usually reacted when it was below 825 ft (250 m; Southwest Research Associates, 1988, cited in Richardson *et al.,* 1995b and Moore and Clarke, 2002). Reactions noted in that study included abrupt turns or dives or both. Green *et al.* (1992, cited in Richardson *et al.,* 1995b) observed that migrating gray whales rarely exhibited noticeable reactions to a straight-line overflight by a Twin Otter at 197 ft (60 m) altitude. Restrictions on aircraft altitude will be part of the proposed mitigation measures (described in the ''Proposed Mitigation'' section later in this document) during the proposed drilling activities, and overflights are likely to have little or no disturbance effects on baleen whales. Any disturbance that may occur would likely be temporary and localized.

Southall *et al.* (2007, Appendix C) reviewed a number of papers describing the responses of marine mammals to non-pulsed sound, such as that produced during exploratory drilling operations. In general, little or no response was observed in animals exposed at received levels from 90–120 dB re 1 μPa (rms). Probability of avoidance and other behavioral effects increased when received levels were from 120–160 dB re 1 μPa (rms). Some of the relevant reviews contained in Southall *et al.* (2007) are summarized next.

Baker *et al.* (1982) reported some avoidance by humpback whales to vessel noise when received levels were 110–120 dB (rms) and clear avoidance at 120–140 dB (sound measurements were not provided by Baker but were based on measurements of identical vessels by Miles and Malme, 1983).

Malme *et al.* (1983, 1984) used playbacks of sounds from helicopter

overflight and drilling rigs and platforms to study behavioral effects on migrating gray whales. Received levels exceeding 120 dB induced avoidance reactions. Malme *et al.* (1984) calculated 10%, 50%, and 90% probabilities of gray whale avoidance reactions at received levels of 110, 120, and 130 dB, respectively. Malme *et al.* (1986) observed the behavior of feeding gray whales during four experimental playbacks of drilling sounds (50 to 315 Hz; 21- min overall duration and 10% duty cycle; source levels of 156–162 dB). In two cases for received levels of 100–110 dB, no behavioral reaction was observed. However, avoidance behavior was observed in two cases where received levels were 110–120 dB.

Richardson *et al.* (1990) performed 12 playback experiments in which bowhead whales in the Alaskan Arctic were exposed to drilling sounds. Whales generally did not respond to exposures in the 100 to 130 dB range, although there was some indication of minor behavioral changes in several instances.

McCauley *et al.* (1996) reported several cases of humpback whales responding to vessels in Hervey Bay, Australia. Results indicated clear avoidance at received levels between 118 to 124 dB in three cases for which response and received levels were observed/measured.

Palka and Hammond (2001) analyzed line transect census data in which the orientation and distance off transect line were reported for large numbers of minke whales. The authors developed a method to account for effects of animal movement in response to sighting platforms. Minor changes in locomotion speed, direction, and/or diving profile were reported at ranges from 1,847 to 2,352 ft (563 to 717 m) at received levels of 110 to 120 dB.

Biassoni *et al.* (2000) and Miller *et al.* (2000) reported behavioral observations for humpback whales exposed to a low-frequency sonar stimulus (160- to 330-Hz frequency band; 42-s tonal signal repeated every 6 min; source levels 170 to 200 dB) during playback experiments. Exposure to measured received levels ranging from 120 to 150 dB resulted in variability in humpback singing behavior. Croll *et al.* (2001) investigated responses of foraging fin and blue whales to the same low frequency active sonar stimulus off southern California. Playbacks and control intervals with no transmission were used to investigate behavior and distribution on time scales of several weeks and spatial scales of tens of kilometers. The general conclusion was that whales remained feeding within a region for which 12 to 30 percent of exposures exceeded 140 dB.

Frankel and Clark (1998) conducted playback experiments with wintering humpback whales using a single speaker producing a low-frequency ''M-sequence'' (sine wave with multiple-phase reversals) signal in the 60 to 90 Hz band with output of 172 dB at 1 m. For 11 playbacks, exposures were between 120 and 130 dB re 1 μPa (rms) and included sufficient information regarding individual responses. During eight of the trials, there were no measurable differences in tracks or bearings relative to control conditions, whereas on three occasions, whales either moved slightly away from (n=1) or towards (n=2) the playback speaker during exposure. The presence of the source vessel itself had a greater effect than did the M-sequence playback.

Finally, Nowacek *et al.* (2004) used controlled exposures to demonstrate behavioral reactions of northern right whales to various non-pulse sounds. Playback stimuli included ship noise, social sounds of conspecifics, and a complex, 18-min ''alert'' sound consisting of repetitions of three different artificial signals. Ten whales were tagged with calibrated instruments that measured received sound characteristics and concurrent animal movements in three dimensions. Five out of six exposed whales reacted strongly to alert signals at measured received levels between 130 and 150 dB (i.e., ceased foraging and swam rapidly to the surface). Two of these individuals were not exposed to ship noise, and the other four were exposed to both stimuli. These whales reacted mildly to conspecific signals. Seven whales, including the four exposed to the alert stimulus, had no measurable response to either ship sounds or actual vessel noise.

Baleen whale responses to pulsed sound (e.g., seismic airguns) have been studied more thoroughly than responses to continuous sound (e.g., drill rigs). Baleen whales generally tend to avoid operating airguns, but avoidance radii are quite variable. Whales are often reported to show no overt reactions to pulses from large arrays of airguns at distances beyond a few kilometers, even though the airgun pulses remain well above ambient noise levels out to much greater distances (Miller *et al.,* 2005). However, baleen whales exposed to strong noise pulses often react by deviating from their normal migration route (Richardson *et al.,* 1999). Migrating gray and bowhead whales were observed avoiding the sound source by displacing their migration route to varying degrees but within the natural boundaries of the migration corridors (Schick and Urban, 2000; Richardson *et al.,* 1999; Malme *et al.,* 1983). Baleen whale responses to pulsed sound however may depend on the type of activity in which the whales are engaged. Some evidence suggests that feeding bowhead whales may be more tolerant of underwater sound than migrating bowheads (Miller *et al.,* 2005; Lyons *et al.,* 2009; Christie *et al.,* 2010).

Results of studies of gray, bowhead, and humpback whales have determined that received levels of pulses in the 160–170 dB re 1 μPa rms range seem to cause obvious avoidance behavior in a substantial fraction of the animals exposed. In many areas, seismic pulses from large arrays of airguns diminish to those levels at distances ranging from 2.8–9 mi (4.5–14.5 km) from the source. For the much smaller airgun array used during the VSP survey (total discharge volume between 600 and 880 in^3), the distance to a received level of 160 dB re 1 μPa rms is estimated to be 1.53 mi (2.47 km). Baleen whales within those distances may show avoidance or other strong disturbance reactions to the airgun array. Subtle behavioral changes sometimes become evident at somewhat lower received levels, and recent studies have shown that some species of baleen whales, notably bowhead and humpback whales, at times show strong avoidance at received levels lower than 160–170 dB re 1 μPa rms.

Malme *et al.* (1986, 1988) studied the responses of feeding eastern gray whales to pulses from a single 100 in^3 airgun off St. Lawrence Island in the northern Bering Sea. They estimated, based on small sample sizes, that 50% of feeding gray whales ceased feeding at an average received pressure level of 173 dB re 1 μPa on an (approximate) rms basis, and that 10% of feeding whales interrupted feeding at received levels of 163 dB. Those findings were generally consistent with the results of experiments conducted on larger numbers of gray whales that were migrating along the California coast and on observations of the distribution of feeding Western Pacific gray whales off Sakhalin Island, Russia, during a seismic survey (Yazvenko *et al.,* 2007).

Data on short-term reactions (or lack of reactions) of cetaceans to impulsive noises do not necessarily provide information about long-term effects. While it is not certain whether impulsive noises affect reproductive rate or distribution and habitat use in subsequent days or years, certain species have continued to use areas ensonified by airguns and have continued to increase in number despite successive years of anthropogenic

activity in the area. Gray whales continued to migrate annually along the west coast of North America despite intermittent seismic exploration and much ship traffic in that area for decades (Appendix A in Malme *et al.,* 1984). In any event, the brief exposures to sound pulses from the proposed airgun source (the airguns will only be fired for a few hours at a time over the course of 1 to 2 days per well) are highly unlikely to result in prolonged effects.

Toothed Whales—Most toothed whales have the greatest hearing sensitivity at frequencies much higher than that of baleen whales and may be less responsive to low-frequency sound commonly associated with oil and gas industry exploratory drilling activities. Richardson *et al.* (1995a) reported that beluga whales did not show any apparent reaction to playback of underwater drilling sounds at distances greater than 656–1,312 ft (200–400 m). Reactions included slowing down, milling, or reversal of course after which the whales continued past the projector, sometimes within 164–328 ft (50–100 m). The authors concluded (based on a small sample size) that the playback of drilling sounds had no biologically significant effects on migration routes of beluga whales migrating through pack ice and along the seaward side of the nearshore lead east of Point Barrow in spring.

At least six of 17 groups of beluga whales appeared to alter their migration path in response to underwater playbacks of icebreaker sound (Richardson *et al.,* 1995a). Received levels from the icebreaker playback were estimated at 78–84 dB in the ⅓-octave band centered at 5,000 Hz, or 8–14 dB above ambient. If beluga whales reacted to an actual icebreaker at received levels of 80 dB, reactions would be expected to occur at distances on the order of 6.2 mi (10 km). Finley *et al.* (1990) also reported beluga avoidance of icebreaker activities in the Canadian High Arctic at distances of 22–31 mi (35–50 km). In addition to avoidance, changes in dive behavior and pod integrity were also noted. However, no icebreakers will be used during this proposed program.

Patenaude *et al.* (2002) reported changes in beluga whale diving and respiration behavior, and some whales veered away when a helicopter passed at ≤820 ft (250 m) lateral distance at altitudes up to 492 ft (150 m). However, some belugas showed no reaction to the helicopter. Belugas appeared to show less response to fixed-wing aircraft than to helicopter overflights.

In reviewing responses of cetaceans with best hearing in mid-frequency ranges, which includes toothed whales, Southall *et al.* (2007) reported that combined field and laboratory data for mid-frequency cetaceans exposed to non-pulse sounds did not lead to a clear conclusion about received levels coincident with various behavioral responses. In some settings, individuals in the field showed profound (significant) behavioral responses to exposures from 90–120 dB, while others failed to exhibit such responses for exposure to received levels from 120–150 dB. Contextual variables other than exposure received level, and probable species differences, are the likely reasons for this variability. Context, including the fact that captive subjects were often directly reinforced with food for tolerating noise exposure, may also explain why there was great disparity in results from field and laboratory conditions—exposures in captive settings generally exceeded 170 dB before inducing behavioral responses. A summary of some of the relevant material reviewed by Southall *et al.* (2007) is next.

Buckstaff (2004) reported elevated dolphin whistle rates with received levels from oncoming vessels in the 110 to 120 dB range in Sarasota Bay, Florida. These hearing thresholds were apparently lower than those reported by a researcher listening with towed hydrophones. Morisaka *et al.* (2005) compared whistles from three populations of Indo-Pacific bottlenose dolphins. One population was exposed to vessel noise with spectrum levels of approximately 85 dB/Hz in the 1- to 22-kHz band (broadband received levels approximately 128 dB) as opposed to approximately 65 dB/Hz in the same band (broadband received levels approximately 108 dB) for the other two sites. Dolphin whistles in the noisier environment had lower fundamental frequencies and less frequency modulation, suggesting a shift in sound parameters as a result of increased ambient noise.

Morton and Symonds (2002) used census data on killer whales in British Columbia to evaluate avoidance of non-pulse acoustic harassment devices (AHDs). Avoidance ranges were about 2.5 mi (4 km). Also, there was a dramatic reduction in the number of days ''resident'' killer whales were sighted during AHD-active periods compared to pre- and post-exposure periods and a nearby control site.

Monteiro-Neto *et al.* (2004) studied avoidance responses of tucuxi (*Sotalia fluviatilis*), a freshwater dolphin, to Dukane® Netmark acoustic deterrent devices. In a total of 30 exposure trials, approximately five groups each demonstrated significant avoidance compared to 20 pinger off and 55 no-pinger control trials over two quadrats of about 0.19 mi^2 (0.5 km^2). Estimated exposure received levels were approximately 115 dB.

Awbrey and Stewart (1983) played back semi-submersible drillship sounds (source level: 163 dB) to belugas in Alaska. They reported avoidance reactions at 984 and 4,921 ft (300 and 1,500 m) and approach by groups at a distance of 2.2 mi (3.5 km; received levels were approximately 110 to 145 dB over these ranges assuming a 15 log R transmission loss). Similarly, Richardson *et al.* (1990) played back drilling platform sounds (source level: 163 dB) to belugas in Alaska. They conducted aerial observations of eight individuals among approximately 100 spread over an area several hundred meters to several kilometers from the sound source and found no obvious reactions. Moderate changes in movement were noted for three groups swimming within 656 ft (200 m) of the sound projector.

Two studies deal with issues related to changes in marine mammal vocal behavior as a function of variable background noise levels. Foote *et al.* (2004) found increases in the duration of killer whale calls over the period 1977 to 2003, during which time vessel traffic in Puget Sound, and particularly whale-watching boats around the animals, increased dramatically. Scheifele *et al.* (2005) demonstrated that belugas in the St. Lawrence River increased the levels of their vocalizations as a function of the background noise level (the ''Lombard Effect'').

Several researchers conducting laboratory experiments on hearing and the effects of non-pulse sounds on hearing in mid-frequency cetaceans have reported concurrent behavioral responses. Nachtigall *et al.* (2003) reported that noise exposures up to 179 dB and 55-min duration affected the trained behaviors of a bottlenose dolphin participating in a temporary threshold shift (TTS) experiment. Finneran and Schlundt (2004) provided a detailed, comprehensive analysis of the behavioral responses of belugas and bottlenose dolphins to 1-s tones (received levels 160 to 202 dB) in the context of TTS experiments. Romano *et al.* (2004) investigated the physiological responses of a bottlenose dolphin and a beluga exposed to these tonal exposures and demonstrated a decrease in blood cortisol levels during a series of exposures between 130 and 201 dB. Collectively, the laboratory observations suggested the onset of a behavioral

response at higher received levels than did field studies. The differences were likely related to the very different conditions and contextual variables between untrained, free-ranging individuals vs. laboratory subjects that were rewarded with food for tolerating noise exposure.

Seismic operators and marine mammal observers sometimes see dolphins and other small toothed whales near operating airgun arrays, but, in general, there seems to be a tendency for most delphinids to show some limited avoidance of seismic vessels operating large airgun systems. However, some dolphins seem to be attracted to the seismic vessel and floats, and some ride the bow wave of the seismic vessel even when large arrays of airguns are firing. Nonetheless, there have been indications that small toothed whales sometimes move away or maintain a somewhat greater distance from the vessel when a large array of airguns is operating than when it is silent (e.g., Goold, 1996a,b,c; Calambokidis and Osmek, 1998; Stone, 2003). The beluga may be a species that (at least at times) shows long-distance avoidance of seismic vessels. Aerial surveys during seismic operations in the southeastern Beaufort Sea recorded much lower sighting rates of beluga whales within 6.2–12.4 mi (10–20 km) of an active seismic vessel. These results were consistent with the low number of beluga sightings reported by observers aboard the seismic vessel, suggesting that some belugas might be avoiding the seismic operations at distances of 6.2–12.4 mi (10–20 km) (Miller *et al.,* 2005).

Observers stationed on seismic vessels operating off the United Kingdom from 1997–2000 have provided data on the occurrence and behavior of various toothed whales exposed to seismic pulses (Stone, 2003; Gordon *et al.,* 2004). Killer whales were found to be significantly farther from large airgun arrays during periods of shooting compared with periods of no shooting. The displacement of the median distance from the array was approximately 0.5 km (0.3 mi) or more. Killer whales also appear to be more tolerant of seismic shooting in deeper water.

Captive bottlenose dolphins and beluga whales exhibit changes in behavior when exposed to strong pulsed sounds similar in duration to those typically used in seismic surveys (Finneran *et al.,* 2002, 2005). However, the animals tolerated high received levels of sound (p–p level >200 dB re 1 μPa) before exhibiting aversive behaviors.

Pinnipeds—Pinnipeds generally seem to be less responsive to exposure to industrial sound than most cetaceans. Pinniped responses to underwater sound from some types of industrial activities such as seismic exploration appear to be temporary and localized (Harris *et al.,* 2001; Reiser *et al.,* 2009).

Southall *et al.* (2007) reviewed literature describing responses of pinnipeds to non-pulsed sound and reported that the limited data suggest exposures between approximately 90 and 140 dB generally do not appear to induce strong behavioral responses in pinnipeds exposed to non-pulse sounds in water; no data exist regarding exposures at higher levels. It is important to note that among these studies, there are some apparent differences in responses between field and laboratory conditions. In contrast to the mid-frequency odontocetes, captive pinnipeds responded more strongly at lower levels than did animals in the field. Again, contextual issues are the likely cause of this difference.

Jacobs and Terhune (2002) observed harbor seal reactions to AHDs (source level in this study was 172 dB) deployed around aquaculture sites. Seals were generally unresponsive to sounds from the AHDs. During two specific events, individuals came within 141 and 144 ft (43 and 44 m) of active AHDs and failed to demonstrate any measurable behavioral response; estimated received levels based on the measures given were approximately 120 to 130 dB.

Costa *et al.* (2003) measured received noise levels from an Acoustic Thermometry of Ocean Climate (ATOC) program sound source off northern California using acoustic data loggers placed on translocated elephant seals. Subjects were captured on land, transported to sea, instrumented with archival acoustic tags, and released such that their transit would lead them near an active ATOC source (at 939-m depth; 75-Hz signal with 37.5-Hz bandwidth; 195 dB maximum source level, ramped up from 165 dB over 20 min) on their return to a haul-out site. Received exposure levels of the ATOC source for experimental subjects averaged 128 dB (range 118 to 137) in the 60- to 90-Hz band. None of the instrumented animals terminated dives or radically altered behavior upon exposure, but some statistically significant changes in diving parameters were documented in nine individuals. Translocated northern elephant seals exposed to this particular non-pulse source began to demonstrate subtle behavioral changes at exposure to received levels of approximately 120 to 140 dB.

Kastelein *et al.* (2006) exposed nine captive harbor seals in an approximately 82 × 98 ft (25 × 30 m) enclosure to non-pulse sounds used in underwater data communication systems (similar to acoustic modems). Test signals were frequency modulated tones, sweeps, and bands of noise with fundamental frequencies between 8 and 16 kHz; 128 to 130 [± 3] dB source levels; 1- to 2-s duration [60–80 percent duty cycle]; or 100 percent duty cycle. They recorded seal positions and the mean number of individual surfacing behaviors during control periods (no exposure), before exposure, and in 15-min experimental sessions (n = 7 exposures for each sound type). Seals generally swam away from each source at received levels of approximately 107 dB, avoiding it by approximately 16 ft (5 m), although they did not haul out of the water or change surfacing behavior. Seal reactions did not appear to wane over repeated exposure (i.e., there was no obvious habituation), and the colony of seals generally returned to baseline conditions following exposure. The seals were not reinforced with food for remaining in the sound field.

Potential effects to pinnipeds from aircraft activity could involve both acoustic and non-acoustic effects. It is uncertain if the seals react to the sound of the helicopter or to its physical presence flying overhead. Typical reactions of hauled out pinnipeds to aircraft that have been observed include looking up at the aircraft, moving on the ice or land, entering a breathing hole or crack in the ice, or entering the water. Ice seals hauled out on the ice have been observed diving into the water when approached by a low-flying aircraft or helicopter (Burns and Harbo, 1972, cited in Richardson *et al.,* 1995a; Burns and Frost, 1979, cited in Richardson *et al.,* 1995a). Richardson *et al.* (1995a) note that responses can vary based on differences in aircraft type, altitude, and flight pattern.

Blackwell *et al.* (2004a) observed 12 ringed seals during low-altitude overflights of a Bell 212 helicopter at Northstar in June and July 2000 (9 observations took place concurrent with pipe-driving activities). One seal showed no reaction to the aircraft while the remaining 11 (92%) reacted, either by looking at the helicopter (n=10) or by departing from their basking site (n=1). Blackwell *et al.* (2004a) concluded that none of the reactions to helicopters were strong or long lasting, and that seals near Northstar in June and July 2000 probably had habituated to industrial sounds and visible activities that had occurred often during the preceding winter and spring. There have been few

systematic studies of pinniped reactions to aircraft overflights, and most of the available data concern pinnipeds hauled out on land or ice rather than pinnipeds in the water (Richardson *et al.,* 1995a; Born *et al.,* 1999).

Reactions of harbor seals to the simulated sound of a 2-megawatt wind power generator were measured by Koschinski *et al.* (2003). Harbor seals surfaced significantly further away from the sound source when it was active and did not approach the sound source as closely. The device used in that study produced sounds in the frequency range of 30 to 800 Hz, with peak source levels of 128 dB at 1 m at the 80- and 160-Hz frequencies.

Pinnipeds are not likely to show a strong avoidance reaction to the airgun sources proposed for use. Visual monitoring from seismic vessels has shown only slight (if any) avoidance of airguns by pinnipeds and only slight (if any) changes in behavior. Monitoring work in the Alaskan Beaufort Sea during 1996–2001 provided considerable information regarding the behavior of Arctic ice seals exposed to seismic pulses (Harris *et al.,* 2001; Moulton and Lawson, 2002). These seismic projects usually involved arrays of 6 to 16 airguns with total volumes of 560 to 1,500 in^3. The combined results suggest that some seals avoid the immediate area around seismic vessels. In most survey years, ringed seal sightings tended to be farther away from the seismic vessel when the airguns were operating than when they were not (Moulton and Lawson, 2002). However, these avoidance movements were relatively small, on the order of 100 m (328 ft) to a few hundreds of meters, and many seals remained within 100–200 m (328–656 ft) of the trackline as the operating airgun array passed by. Seal sighting rates at the water surface were lower during airgun array operations than during no-airgun periods in each survey year except 1997. Similarly, seals are often very tolerant of pulsed sounds from seal-scaring devices (Mate and Harvey, 1987; Jefferson and Curry, 1994; Richardson *et al.,* 1995a). However, initial telemetry work suggests that avoidance and other behavioral reactions by two other species of seals to small airgun sources may at times be stronger than evident to date from visual studies of pinniped reactions to airguns (Thompson *et al.,* 1998). Even if reactions of the species occurring in the present study area are as strong as those evident in the telemetry study, reactions are expected to be confined to relatively small distances and durations, with no long-term effects on pinniped individuals or populations.

4. Threshold Shift (Noise-Induced Loss of Hearing)

When animals exhibit reduced hearing sensitivity (i.e., sounds must be louder for an animal to detect them) following exposure to an intense sound or sound for long duration, it is referred to as a noise-induced threshold shift (TS). An animal can experience temporary threshold shift (TTS) or permanent threshold shift (PTS). TTS can last from minutes or hours to days (i.e., there is complete recovery), can occur in specific frequency ranges (i.e., an animal might only have a temporary loss of hearing sensitivity between the frequencies of 1 and 10 kHz), and can be of varying amounts (for example, an animal's hearing sensitivity might be reduced initially by only 6 dB or reduced by 30 dB). PTS is permanent, but some recovery is possible. PTS can also occur in a specific frequency range and amount as mentioned above for TTS.

The following physiological mechanisms are thought to play a role in inducing auditory TS: Effects to sensory hair cells in the inner ear that reduce their sensitivity, modification of the chemical environment within the sensory cells, residual muscular activity in the middle ear, displacement of certain inner ear membranes, increased blood flow, and post-stimulatory reduction in both efferent and sensory neural output (Southall *et al.,* 2007). The amplitude, duration, frequency, temporal pattern, and energy distribution of sound exposure all can affect the amount of associated TS and the frequency range in which it occurs. As amplitude and duration of sound exposure increase, so, generally, does the amount of TS, along with the recovery time. For intermittent sounds, less TS could occur than compared to a continuous exposure with the same energy (some recovery could occur between intermittent exposures depending on the duty cycle between sounds) (Kryter *et al.,* 1966; Ward, 1997). For example, one short but loud (higher SPL) sound exposure may induce the same impairment as one longer but softer sound, which in turn may cause more impairment than a series of several intermittent softer sounds with the same total energy (Ward, 1997). Additionally, though TTS is temporary, prolonged exposure to sounds strong enough to elicit TTS, or shorter-term exposure to sound levels well above the TTS threshold, can cause PTS, at least in terrestrial mammals (Kryter, 1985). However, in the case of the proposed exploratory drilling program, animals are not expected to be exposed to levels high enough or durations long enough to result in PTS.

PTS is considered auditory injury (Southall *et al.,* 2007). Irreparable damage to the inner or outer cochlear hair cells may cause PTS; however, other mechanisms are also involved, such as exceeding the elastic limits of certain tissues and membranes in the middle and inner ears and resultant changes in the chemical composition of the inner ear fluids (Southall *et al.,* 2007).

Although the published body of scientific literature contains numerous theoretical studies and discussion papers on hearing impairments that can occur with exposure to a loud sound, only a few studies provide empirical information on the levels at which noise-induced loss in hearing sensitivity occurs in nonhuman animals. For marine mammals, published data are limited to the captive bottlenose dolphin, beluga, harbor porpoise, and Yangtze finless porpoise (Finneran *et al.,* 2000, 2002b, 2003, 2005a, 2007, 2010a, 2010b; Finneran and Schlundt, 2010; Lucke *et al.,* 2009; Mooney *et al.,* 2009a, 2009b; Popov *et al.,* 2011a, 2011b; Kastelein *et al.,* 2012a; Schlundt *et al.,* 2000; Nachtigall *et al.,* 2003, 2004). For pinnipeds in water, data are limited to measurements of TTS in harbor seals, an elephant seal, and California sea lions (Kastak *et al.,* 1999, 2005; Kastelein *et al.,* 2012b).

Marine mammal hearing plays a critical role in communication with conspecifics, and interpretation of environmental cues for purposes such as predator avoidance and prey capture. Depending on the degree (elevation of threshold in dB), duration (i.e., recovery time), and frequency range of TTS, and the context in which it is experienced, TTS can have effects on marine mammals ranging from discountable to serious (similar to those discussed in auditory masking, below). For example, a marine mammal may be able to readily compensate for a brief, relatively small amount of TTS in a non-critical frequency range that occurs during a time where ambient noise is lower and there are not as many competing sounds present. Alternatively, a larger amount and longer duration of TTS sustained during time when communication is critical for successful mother/calf interactions could have more serious impacts. Also, depending on the degree and frequency range, the effects of PTS on an animal could range in severity, although it is considered generally more serious because it is a permanent condition. Of note, reduced hearing sensitivity as a simple function of aging has been observed in marine mammals,

as well as humans and other taxa (Southall *et al.,* 2007), so we can infer that strategies exist for coping with this condition to some degree, though likely not without cost.

Given the higher level of sound necessary to cause PTS as compared with TTS, it is considerably less likely that PTS would occur during the proposed exploratory drilling program in Cook Inlet. However, several of the sound sources do not even emit sound levels at levels high enough to potentially even cause TTS.

5. Non-Auditory Physical Effects

Non-auditory physical effects might occur in marine mammals exposed to strong underwater sound. Possible types of non-auditory physiological effects or injuries that theoretically might occur in mammals close to a strong sound source include stress, neurological effects, bubble formation, and other types of organ or tissue damage. Some marine mammal species (i.e., beaked whales) may be especially susceptible to injury and/or stranding when exposed to strong pulsed sounds.

Classic stress responses begin when an animal's central nervous system perceives a potential threat to its homeostasis. That perception triggers stress responses regardless of whether a stimulus actually threatens the animal; the mere perception of a threat is sufficient to trigger a stress response (Moberg, 2000; Sapolsky *et al.,* 2005; Seyle, 1950). Once an animal's central nervous system perceives a threat, it mounts a biological response or defense that consists of a combination of the four general biological defense responses: Behavioral responses; autonomic nervous system responses; neuroendocrine responses; or immune responses.

In the case of many stressors, an animal's first and most economical (in terms of biotic costs) response is behavioral avoidance of the potential stressor or avoidance of continued exposure to a stressor. An animal's second line of defense to stressors involves the sympathetic part of the autonomic nervous system and the classical ''fight or flight'' response, which includes the cardiovascular system, the gastrointestinal system, the exocrine glands, and the adrenal medulla to produce changes in heart rate, blood pressure, and gastrointestinal activity that humans commonly associate with ''stress.'' These responses have a relatively short duration and may or may not have significant long-term effects on an animal's welfare.

An animal's third line of defense to stressors involves its neuroendocrine or sympathetic nervous systems; the system that has received the most study has been the hypothalmus-pituitary-adrenal system (also known as the HPA axis in mammals or the hypothalamus-pituitary-interrenal axis in fish and some reptiles). Unlike stress responses associated with the autonomic nervous system, virtually all neuroendocrine functions that are affected by stress—including immune competence, reproduction, metabolism, and behavior—are regulated by pituitary hormones. Stress-induced changes in the secretion of pituitary hormones have been implicated in failed reproduction (Moberg, 1987; Rivier, 1995), altered metabolism (Elasser *et al.,* 2000), reduced immune competence (Blecha, 2000), and behavioral disturbance. Increases in the circulation of glucocorticosteroids (cortisol, corticosterone, and aldosterone in marine mammals; see Romano *et al.,* 2004) have been equated with stress for many years.

The primary distinction between stress (which is adaptive and does not normally place an animal at risk) and distress is the biotic cost of the response. During a stress response, an animal uses glycogen stores that can be quickly replenished once the stress is alleviated. In such circumstances, the cost of the stress response would not pose a risk to the animal's welfare. However, when an animal does not have sufficient energy reserves to satisfy the energetic costs of a stress response, energy resources must be diverted from other biotic functions, which impair those functions that experience the diversion. For example, when mounting a stress response diverts energy away from growth in young animals, those animals may experience stunted growth. When mounting a stress response diverts energy from a fetus, an animal's reproductive success and fitness will suffer. In these cases, the animals will have entered a pre-pathological or pathological state which is called ''distress'' (sensu Seyle, 1950) or ''allostatic loading'' (sensu McEwen and Wingfield, 2003). This pathological state will last until the animal replenishes its biotic reserves sufficient to restore normal function. Note that these examples involved a long-term (days or weeks) stress response exposure to stimuli.

Relationships between these physiological mechanisms, animal behavior, and the costs of stress responses have also been documented fairly well through controlled experiment; because this physiology exists in every vertebrate that has been studied, it is not surprising that stress responses and their costs have been documented in both laboratory and free-living animals (for examples see, Holberton *et al.,* 1996; Hood *et al.,* 1998; Jessop *et al.,* 2003; Krausman *et al.,* 2004; Lankford *et al.,* 2005; Reneerkens *et al.,* 2002; Thompson and Hamer, 2000). Although no information has been collected on the physiological responses of marine mammals to anthropogenic sound exposure, studies of other marine animals and terrestrial animals would lead us to expect some marine mammals to experience physiological stress responses and, perhaps, physiological responses that would be classified as ''distress'' upon exposure to anthropogenic sounds.

For example, Jansen (1998) reported on the relationship between acoustic exposures and physiological responses that are indicative of stress responses in humans (e.g., elevated respiration and increased heart rates). Jones (1998) reported on reductions in human performance when faced with acute, repetitive exposures to acoustic disturbance. Trimper *et al.* (1998) reported on the physiological stress responses of osprey to low-level aircraft noise while Krausman *et al.* (2004) reported on the auditory and physiology stress responses of endangered Sonoran pronghorn to military overflights. Smith *et al.* (2004a, 2004b) identified noise-induced physiological transient stress responses in hearing-specialist fish (i.e., goldfish) that accompanied short- and long-term hearing losses. Welch and Welch (1970) reported physiological and behavioral stress responses that accompanied damage to the inner ears of fish and several mammals.

Hearing is one of the primary senses marine mammals use to gather information about their environment and communicate with conspecifics. Although empirical information on the relationship between sensory impairment (TTS, PTS, and acoustic masking) on marine mammals remains limited, we assume that reducing a marine mammal's ability to gather information about its environment and communicate with other members of its species would induce stress, based on data that terrestrial animals exhibit those responses under similar conditions (NRC, 2003) and because marine mammals use hearing as their primary sensory mechanism. Therefore, we assume that acoustic exposures sufficient to trigger onset PTS or TTS would be accompanied by physiological stress responses. Marine mammals might experience stress responses at received levels lower than those necessary to trigger onset TTS. Based on empirical studies of the time required to

recover from stress responses (Moberg, 2000), NMFS also assumes that stress responses could persist beyond the time interval required for animals to recover from TTS and might result in pathological and pre-pathological states that would be as significant as behavioral responses to TTS. However, as stated previously in this document, the source level of the jack-up rig is not loud enough to induce PTS or likely even TTS.

Resonance effects (Gentry, 2002) and direct noise-induced bubble formations (Crum *et al.,* 2005) are implausible in the case of exposure to an impulsive broadband source like an airgun array. If seismic surveys disrupt diving patterns of deep-diving species, this might result in bubble formation and a form of the bends, as speculated to occur in beaked whales exposed to sonar. However, there is no specific evidence of this upon exposure to airgun pulses. Additionally, no beaked whale species occur in the proposed project area.

In general, very little is known about the potential for strong, anthropogenic underwater sounds to cause non-auditory physical effects in marine mammals. Such effects, if they occur at all, would presumably be limited to short distances and to activities that extend over a prolonged period. The available data do not allow identification of a specific exposure level above which non-auditory effects can be expected (Southall *et al.,* 2007) or any meaningful quantitative predictions of the numbers (if any) of marine mammals that might be affected in those ways. There is no definitive evidence that any of these effects occur even for marine mammals in close proximity to large arrays of airguns, which are not proposed for use during this program. For the most part, only low-level continuous sounds would be produced during the exploratory drilling program. In addition, marine mammals that show behavioral avoidance of industry activities, including belugas and some pinnipeds, are especially unlikely to incur non-auditory impairment or other physical effects.

6. Stranding and Mortality

Marine mammals close to underwater detonations of high explosive can be killed or severely injured, and the auditory organs are especially susceptible to injury (Ketten *et al.,* 1993; Ketten, 1995). Airgun pulses are less energetic and their peak amplitudes have slower rise times. To date, there is no evidence that serious injury, death, or stranding by marine mammals can occur from exposure to airgun pulses, even in the case of large airgun arrays. Additionally, the airguns used during VSP are used for short periods of time. The continuous sounds produced by the drill rig are also far less energetic.

It should be noted that strandings related to sound exposure have not been recorded for marine mammal species in Cook Inlet. Beluga whale strandings in Cook Inlet are not uncommon; however, these events often coincide with extreme tidal fluctuations (''spring tides'') or killer whale sightings (Shelden *et al.,* 2003). For example, in August 2012, a group of Cook Inlet beluga whales stranded in the mud flats of Turnagain Arm during low tide and were able to swim free with the flood tide. NMFS does not expect any marine mammals will incur serious injury or mortality in Cook Inlet or strand as a result of the proposed exploratory drilling program.

Vessel Impacts

Vessel activity and noise associated with vessel activity will temporarily increase in the action area during Buccaneer's exploratory drilling program as a result of the operation of a jack-up drill rig and the use of tow and other support vessels. While under tow, the rig and the tow vessels move at slow speeds (2–4 knots). The support barges supplying pipe to the drill rig can typically run at 7–8 knots but may move slower inside Cook Inlet. Based on this information, NMFS does not anticipate and does not propose to authorize take from vessel strikes.

Odontocetes, such as beluga whales, killer whales, and harbor porpoises, often show tolerance to vessel activity; however, they may react at long distances if they are confined by ice, shallow water, or were previously harassed by vessels (Richardson *et al.,* 1995). Beluga whale response to vessel noise varies greatly from tolerance to extreme sensitivity depending on the activity of the whale and previous experience with vessels (Richardson *et al.,* 1995). Reactions to vessels depends on whale activities and experience, habitat, boat type, and boat behavior (Richardson *et al.,* 1995) and may include behavioral responses, such as altered headings or avoidance (Blane and Jaakson, 1994; Erbe and Farmer, 2000); fast swimming; changes in vocalizations (Lesage *et al.,* 1999; Scheifele *et al.,* 2005); and changes in dive, surfacing, and respiration patterns.

There are few data published on pinniped responses to vessel activity, and most of the information is anecdotal (Richardson *et al.,* 1995). Generally, sea lions in water show tolerance to close and frequently approaching vessels and sometimes show interest in fishing vessels. They are less tolerant when hauled out on land; however, they rarely react unless the vessel approaches within 100–200 m (330–660 ft; reviewed in Richardson *et al.,* 1995).

The addition of the jack-up rig and a few support vessels and noise due to rig and vessel operations associated with the exploratory drilling program would not be outside the present experience of marine mammals in Cook Inlet, although levels may increase locally. Given the large number of vessels in Cook Inlet and the apparent habituation to vessels by Cook Inlet marine mammals that may occur in the area, vessel activity and noise is not expected to have effects that could cause significant or long-term consequences for individual marine mammals or their populations.

Oil Spill and Discharge Impacts

As noted above, the specified activity involves the drilling of exploratory wells and associated activities in upper Cook Inlet during the 2014 open water season. The primary stressors to marine mammals that are reasonably expected to occur will be acoustic in nature. The likelihood of a large or very large oil spill occurring during Buccaneer's proposed exploratory drilling program is remote. Offshore oil spill records in Cook Inlet during 1994–2011 show three spills during oil exploration (ADNR Division of Oil and Gas, 2011 unpub. data): Two oil spills at the UNOCAL Dillion Platform in June 2011 (two gallons) and December 2001 (three gallons); and one oil spill at the UNOCAL Monopod Platform in January 2002 (one gallon). During this same time period, 71 spills occurred offshore in Cook Inlet during oil production. Most spills ranged from 0.0011 to 1 gallon (42 spills), and only three spills were larger than 200 gallons: 210 gallons in July 2001 at the Cook Inlet Energy Stewart facility; 250 gallons in February 1998 at the King Salmon platform; and 504 gallons in October 1999 at the UNOCAL Dillion platform. All 71 crude oil spills from the offshore platforms, both exploration and production, totaled less than 2,140 gallons. Based on historical data, most oil spills have been small. Moreover, during more than 60 years of oil and gas exploration and development in Cook Inlet, there has not been a single oil well blowout, making it difficult to assign a specific risk factor to the possibility of such an event in Cook Inlet. However, the probability of such an event is thought to be of extremely low probability.

Buccaneer will have various measures and protocols in place that will be implemented to prevent oil releases from the wellbore. Buccaneer has planned formal routine rig maintenance and surveillance checks, as well as normal inspection and equipment checks to be conducted on the jack-up rig daily. The following steps will be in place to prevent oil from entering the water:

- Required inspections will follow standard operating procedures.
- Personnel working on the rig will be directed to report any unusual conditions to appropriate personnel.
- Oily equipment will be regularly wiped down with oil absorbent pads to collect free oil. Drips and small spillage from equipment will be controlled through use of drip pans and oil absorbent drop clothes.
- Oil absorbent materials used to contain oil spills or seeps will be collected and disposed of in sealed plastic bags or metal drums and closed containers.
- The platform surfaces will be kept clean of waste materials and loose debris on a daily basis.
- Remedial actions will be taken when visual inspections indicate deterioration of equipment (tanks) and/or their control systems.
- Following remedial work, and as appropriate, tests will be conducted to determine that the systems function correctly.

Drilling and completion fluids provide primary well control during drilling, work over, or completion operations. These fluids are designed to exert hydrostatic pressure on the wellbore that exceeds the pore pressures within the subsurface formations. This prevents undesired fluid flow into the wellbore. Surface mounted blowout preventer (BOP) equipment provides secondary well control. In the event that primary well control is lost, this surface equipment is used to contain the influx of formation fluid and then safely circulate it out of the wellbore.

The BOP is a large, specialized valve used to seal, control, and monitor oil and gas wells. BOPs come in variety of styles, sizes, and pressure ratings. For Cook Inlet, the BOP equipment used by Buccaneer will consist of:

- Three BOPs pressure safety levels of: (1) 5,000 pounds per square inch (psi) (2) 10,000 psi, and (3) 15,000 psi;
- A minimum of three 35 cm (13 ⅝ in), 10,000 psi WP ram type preventers;
- One 35 cm (13 ⅝ in) annular preventer;
- Choke and kill lines that provide circulating paths from/to the choke manifold;
- A two choke manifold that allows for safe circulation of well influxes out of the well bore; and
- A hydraulic control system with accumulator backup closing.

The wellhead, associated valves, and control systems provide blowout prevention during well production. These systems provide several layers of redundancy to ensure pressure containment is maintained. Well control planning is performed in accordance with Alaska Oil and Gas Conservation Commission (AOGCC) and Bureau of Safety and Environment Enforcement (BSEE) regulations. The operator's policies and recommended practices are, at a minimum, equivalent to BSEE regulations. BOP test drills are performed on a frequent basis to ensure the well will be shut in quickly and properly. BOP testing procedures will meet American Petroleum Institute Recommended Practice No. 53 and AOGCC specifications. The BOP tests will be conducted with a nonfreezing fluid when the ambient temperature around the BOP stack is below 0 °C (32 °F). Tests will be conducted at least weekly and before drilling out the shoe of each casing string. The AOGCC will be contacted before each test is conducted, and will be onsite during BOP tests unless an inspection waiver is approved.

Buccaneer developed an Oil Discharge Prevention and Contingency Plan (ODPCP). Alaska's Department of Environmental Conservation (ADEC) approved Buccaneer's ODPCP on August 29, 2012. NMFS reviewed the ODPCP during the ESA consultation process and found that with implementation of the safety features mentioned above that the risk of an oil spill was discountable.

Despite concluding that the risk of serious injury or mortality from an oil spill in this case is extremely remote, NMFS has nonetheless evaluated the potential effects of an oil spill on marine mammals. While an oil spill is not a component of Buccaneer's specified activity for which NMFS is proposing to authorize take, potential impacts on marine mammals from an oil spill are discussed in more detail next.

1. Potential Effects of Oil on Cetaceans

The specific effects an oil spill would have on cetaceans are not well known. While mortality is unlikely, exposure to spilled oil could lead to skin irritation, baleen fouling (which might reduce feeding efficiency), respiratory distress from inhalation of hydrocarbon vapors, consumption of some contaminated prey items, and temporary displacement from contaminated feeding areas. Geraci and St. Aubin (1990) summarize effects of oil on marine mammals. The number of cetaceans that might be contacted by a spill would depend on the size, timing, and duration of the spill and where the oil is in relation to the animals. Whales may not avoid oil spills, and some have been observed feeding within oil slicks (Goodale *et al.,* 1981).

There is no direct evidence that oil spills, including the much studied Santa Barbara Channel and Exxon Valdez spills, have caused any deaths of cetaceans (Geraci, 1990; Brownell, 1971; Harvey and Dahlheim, 1994). It is suspected that some individually identified killer whales that disappeared from Prince William Sound during the time of the Exxon Valdez spill were casualties of that spill. However, no clear cause and effect relationship between the spill and the disappearance could be established (Dahlheim and Matkin, 1994). The AT–1 pod of transient killer whales that sometimes inhabits Prince William Sound has continued to decline after the Exxon Valdez oil spill (EVOS). Matkin *et al.* (2008) tracked the AB resident pod and the AT–1 transient group of killer whales from 1984 to 2005. The results of their photographic surveillance indicate a much higher than usual mortality rate for both populations the year following the spill (33% for AB Pod and 41% for AT–1 Group) and lower than average rates of increase in the 16 years after the spill (annual increase of about 1.6% for AB Pod compared to an annual increase of about 3.2% for other Alaska killer whale pods). In killer whale pods, mortality rates are usually higher for non-reproductive animals and very low for reproductive animals and adolescents (Olesiuk *et al.,* 1990, 2005; Matkin *et al.,* 2005). No effects on humpback whales in Prince William Sound were evident after the EVOS (von Ziegesar *et al.,* 1994). There was some temporary displacement of humpback whales out of Prince William Sound, but this could have been caused by oil contamination, boat and aircraft disturbance, displacement of food sources, or other causes.

Migrating gray whales were apparently not greatly affected by the Santa Barbara spill of 1969. There appeared to be no relationship between the spill and mortality of marine mammals. The higher than usual counts of dead marine mammals recorded after the spill represented increased survey effort and therefore cannot be conclusively linked to the spill itself (Brownell, 1971; Geraci, 1990). The conclusion was that whales were either

able to detect the oil and avoid it or were unaffected by it (Geraci, 1990).

Schwake *et al.* (2013) studied two populations of common bottlenose dolphins in the Gulf of Mexico following the Deepwater Horizon oil spill to evaluate sublethal effects. They conducted health assessments in Barataria Bay, Louisiana, an area that received heavy and prolonged oiling and in a reference site, Sarasota Bay, Florida, where oil was not observed. Several disease conditions were noted for the Barataria Bay dolphins, including hypoadrenocorticism, pulmonary abnormalities, and tooth loss (Schwake *et al.,* 2013). Even though several of the observed health effects are consistent with exposure to petroleum hydrocarbons because the researchers did not have prespill health data for the Barataria Bay dolphins, they cannot rule out that other pre-existing environmental stressors made this population particularly vulnerable to effects from the oil spill (Schwake *et al.,* 2013).

Whales rely on a layer of blubber for insulation, so oil would have little if any effect on thermoregulation by whales. Effects of oiling on cetacean skin appear to be minor and of little significance to the animal's health (Geraci, 1990). Histological data and ultrastructural studies by Geraci and St. Aubin (1990) showed that exposures of skin to crude oil for up to 45 minutes in four species of toothed whales had no effect. They switched to gasoline and applied the sponge up to 75 minutes. This produced transient damage to epidermal cells in whales. Subtle changes were evident only at the cell level. In each case, the skin damage healed within a week. They concluded that a cetacean's skin is an effective barrier to the noxious substances in petroleum. These substances normally damage skin by getting between cells and dissolving protective lipids. In cetacean skin, however, tight intercellular bridges, vital surface cells, and the extraordinary thickness of the epidermis impeded the damage. The authors could not detect a change in lipid concentration between and within cells after exposing skin from a white-sided dolphin to gasoline for 16 hours in vitro.

Whales could ingest oil if their food is contaminated, or oil could also be absorbed through the respiratory tract. Some of the ingested oil is voided in vomit or feces but some is absorbed and could cause toxic effects (Geraci, 1990). When returned to clean water, contaminated animals can depurate this internal oil (Engelhardt, 1978, 1982). Oil ingestion can decrease food assimilation of prey eaten (St. Aubin, 1988). Cetaceans may swallow some oil-contaminated prey, but it likely would be only a small part of their food. It is not known if whales would leave a feeding area where prey was abundant following a spill. Some zooplankton eaten by baleen whales consume oil particles, and bioaccumulation can result. Tissue studies by Geraci and St. Aubin (1990) revealed low levels of naphthalene in the livers and blubber of baleen whales. This result suggests that prey have low concentrations in their tissues, or that baleen whales may be able to metabolize and excrete certain petroleum hydrocarbons. However, baleen whale species are uncommon in the location of Buccaneer's proposed well sites. Baleen whales are more likely to be encountered in the lower Inlet during rig towing, far away from the drill sites. Whales exposed to an oil spill are unlikely to ingest enough oil to cause serious internal damage (Geraci and St. Aubin, 1980, 1982), and this kind of damage has not been reported (Geraci, 1990).

Some cetaceans can detect oil and sometimes avoid it, but others enter and swim through slicks without apparent effects (Geraci, 1990; Harvey and Dahlheim, 1994). Bottlenose dolphins in the Gulf of Mexico apparently could detect and avoid slicks and mousse but did not avoid light sheens on the surface (Smultea and Wursig, 1995). After the Regal Sword spill in 1979, various species of baleen and toothed whales were observed swimming and feeding in areas containing spilled oil southeast of Cape Cod, MA (Goodale *et al.,* 1981). For months following EVOS, there were numerous observations of gray whales, harbor porpoises, Dall's porpoises, and killer whales swimming through light-to-heavy crude-oil sheens (Harvey and Dalheim, 1994, cited in Matkin *et al.,* 2008). However, if some of the animals avoid the area because of the oil, then the effects of the oiling would be less severe on those individuals.

2. Potential Effects of Oil on Pinnipeds

Externally oiled phocid seals often survive and become clean, but heavily oiled seal pups and adults may die, depending on the extent of oiling and characteristics of the oil. Adult seals may suffer some temporary adverse effects, such as eye and skin irritation, with possible infection (MMS, 1996). Such effects may increase stress, which could contribute to the death of some individuals. There is a likelihood that newborn seal pups, if contacted by oil, would die from oiling through loss of insulation and resulting hypothermia.

Reports of the effects of oil spills have shown that some mortality of seals may have occurred as a result of oil fouling; however, large scale mortality had not been observed prior to the EVOS (St. Aubin, 1990). Effects of oil on marine mammals were not well studied at most spills because of lack of baseline data and/or the brevity of the post-spill surveys. The largest documented impact of a spill, prior to EVOS, was on young seals in January in the Gulf of St. Lawrence (St. Aubin, 1990). Brownell and Le Boeuf (1971) found no marked effects of oil from the Santa Barbara oil spill on California sea lions or on the mortality rates of newborn pups.

Intensive and long-term studies were conducted after the EVOS in Alaska. There may have been a long-term decline of 36% in numbers of molting harbor seals at oiled haul-out sites in Prince William Sound following EVOS (Frost *et al.,* 1994a). However, in a reanalysis of those data and additional years of surveys, along with an examination of assumptions and biases associated with the original data, Hoover-Miller *et al.* (2001) concluded that the EVOS effect had been overestimated. The decline in attendance at some oiled sites was more likely a continuation of the general decline in harbor seal abundance in Prince William Sound documented since 1984 (Frost *et al.,* 1999) rather than a result of EVOS. The results from Hoover-Miller *et al.* (2001) indicate that the effects of EVOS were largely indistinguishable from natural decline by 1992. However, while Frost *et al.* (2004) concluded that there was no evidence that seals were displaced from oiled sites, they did find that aerial counts indicated 26% fewer pups were produced at oiled locations in 1989 than would have been expected without the oil spill. Harbor seal pup mortality at oiled beaches was 23% to 26%, which may have been higher than natural mortality, although no baseline data for pup mortality existed prior to EVOS (Frost *et al.,* 1994a). There was no conclusive evidence of spill effects on Steller sea lions (Calkins *et al.,* 1994). Oil did not persist on sea lions themselves (as it did on harbor seals), nor did it persist on sea lion haul-out sites and rookeries (Calkins *et al.,* 1994). Sea lion rookeries and haul out sites, unlike those used by harbor seals, have steep sides and are subject to high wave energy (Calkins *et al.,* 1994).

Adult seals rely on a layer of blubber for insulation, and oiling of the external surface does not appear to have adverse thermoregulatory effects (Kooyman *et al.,* 1976, 1977; St. Aubin, 1990). Contact with oil on the external surfaces

can potentially cause increased stress and irritation of the eyes of ringed seals (Geraci and Smith, 1976; St. Aubin, 1990). These effects seemed to be temporary and reversible, but continued exposure of eyes to oil could cause permanent damage (St. Aubin, 1990). Corneal ulcers and abrasions, conjunctivitis, and swollen nictitating membranes were observed in captive ringed seals placed in crude oil-covered water (Geraci and Smith, 1976) and in seals in the Antarctic after an oil spill (Lillie, 1954).

Marine mammals can ingest oil if their food is contaminated. Oil can also be absorbed through the respiratory tract (Geraci and Smith, 1976; Engelhardt *et al.,* 1977). Some of the ingested oil is voided in vomit or feces but some is absorbed and could cause toxic effects (Engelhardt, 1981). When returned to clean water, contaminated animals can depurate this internal oil (Engelhardt, 1978, 1982, 1985). In addition, seals exposed to an oil spill are unlikely to ingest enough oil to cause serious internal damage (Geraci and St. Aubin, 1980, 1982).

Although seals may have the capability to detect and avoid oil, they apparently do so only to a limited extent (St. Aubin, 1990). Seals may abandon the area of an oil spill because of human disturbance associated with cleanup efforts, but they are most likely to remain in the area of the spill. One notable behavioral reaction to oiling is that oiled seals are reluctant to enter the water, even when intense cleanup activities are conducted nearby (St. Aubin, 1990; Frost *et al.,* 1994b, 2004).

Seals that are under natural stress, such as lack of food or a heavy infestation by parasites, could potentially die because of the additional stress of oiling (Geraci and Smith, 1976; St. Aubin, 1990; Spraker *et al.,* 1994). Female seals that are nursing young would be under natural stress, as would molting seals. In both cases, the seals would have reduced food stores and may be less resistant to effects of oil than seals that are not under some type of natural stress. Seals that are not under natural stress (e.g., fasting, molting) would be more likely to survive oiling. In general, seals do not exhibit large behavioral or physiological reactions to limited surface oiling or incidental exposure to contaminated food or vapors (St. Aubin, 1990; Williams *et al.,* 1994). Effects could be severe if seals surface in heavy oil slicks in leads or if oil accumulates near haul-out sites (St. Aubin, 1990).

Anticipated Effects on Marine Mammal Habitat

The primary potential impacts to marine mammals and other marine species are associated with elevated sound levels produced by the exploratory drilling program (i.e. the drill rig and the airguns). However, other potential impacts are also possible to the surrounding habitat from physical disturbance, discharges, and an oil spill (should one occur). This section describes the potential impacts to marine mammal habitat from the specified activity. Because the marine mammals in the area feed on fish and/or invertebrates there is also information on the species typically preyed upon by the marine mammals in the area.

Common Marine Mammal Prey in the Proposed Drilling Area

Fish are the primary prey species for marine mammals in upper Cook Inlet. Beluga whales feed on a variety of fish, shrimp, squid, and octopus (Burns and Seaman, 1986). Common prey species in Knik Arm include salmon, eulachon and cod. Harbor seals feed on fish such as pollock, cod, capelin, eulachon, Pacific herring, and salmon, as well as a variety of benthic species, including crabs, shrimp, and cephalopods. Harbor seals are also opportunistic feeders with their diet varying with season and location. The preferred diet of the harbor seal in the Gulf of Alaska consists of pollock, octopus, capelin, eulachon, and Pacific herring (Calkins, 1989). Other prey species include cod, flat fishes, shrimp, salmon, and squid (Hoover, 1988). Harbor porpoises feed primarily on Pacific herring, cod, whiting (hake), pollock, squid, and octopus (Leatherwood *et al.,* 1982). In the upper Cook Inlet area, harbor porpoise feed on squid and a variety of small schooling fish, which would likely include Pacific herring and eulachon (Bowen and Siniff, 1999; NMFS, unpublished data). Killer whales feed on either fish or other marine mammals depending on genetic type (resident versus transient respectively). Killer whales in Knik Arm are typically the transient type (Shelden *et al.,* 2003) and feed on beluga whales and other marine mammals, such as harbor seal and harbor porpoise. The Steller sea lion diet consists of a variety of fishes (capelin, cod, herring, mackerel, pollock, rockfish, salmon, sand lance, etc.), bivalves, squid, octopus, and gastropods.

Potential Impacts From Seafloor Disturbance on Marine Mammal Habitat

There is a possibility of seafloor disturbance or increased turbidity in the vicinity of the drill sites. Seafloor disturbance could occur with bottom founding of the drill rig legs and anchoring system. These activities could lead to direct effects on bottom fauna, through either displacement or mortality. Increase in suspended sediments from seafloor disturbance also has the potential to indirectly affect bottom fauna and fish. The amount and duration of disturbed or turbid conditions will depend on sediment material.

The potential direct habitat impact by the Buccaneer drilling operation is limited to the actual drill-rig footprint defined as the area occupied and enclosed by the drill-rig legs. The jack-up rig will temporarily disturb up to two offshore locations in upper Cook Inlet, where the wells are proposed to be drilled. Bottom disturbance would occur in the area where the three legs of the rig would be set down and where the actual well would be drilled. The jack-up drill rig footprint would occupy three steel piles at 14 m (46 ft) diameter. The well casing would be a 76 cm (30 in) diameter pipe extending from the seafloor to the rig floor. The casing would only be in place during drilling activities at each potential well location. The total area of disturbance was calculated as 0.54 acres during the land use permitting process. The collective 2-acre footprint of the wells represents a very small fraction of the 7,300 square mile Cook Inlet surface area. Potential damage to the Cook Inlet benthic community will be limited to the actual surface area of the three spud cans (1,585 square feet each or 4,755 square feet total) that form the ''foot'' of each leg. Given the high tidal energy at the well site locations, drilling footprints are not expected to support benthic communities equivalent to shallow lower energy sites found in nearshore waters where harbor seals mostly feed. The presence of the drill rig is not expected to result in direct loss of marine mammal habitat.

Potential Impacts From Sound Generation

With regard to fish as a prey source for odontocetes and seals, fish are known to hear and react to sounds and to use sound to communicate (Tavolga *et al.,* 1981) and possibly avoid predators (Wilson and Dill, 2002). Experiments have shown that fish can sense both the strength and direction of sound (Hawkins, 1981). Primary factors

determining whether a fish can sense a sound signal, and potentially react to it, are the frequency of the signal and the strength of the signal in relation to the natural background noise level.

Fishes produce sounds that are associated with behaviors that include territoriality, mate search, courtship, and aggression. It has also been speculated that sound production may provide the means for long distance communication and communication under poor underwater visibility conditions (Zelick *et al.,* 1999), although the fact that fish communicate at low-frequency sound levels where the masking effects of ambient noise are naturally highest suggests that very long distance communication would rarely be possible. Fishes have evolved a diversity of sound generating organs and acoustic signals of various temporal and spectral contents. Fish sounds vary in structure, depending on the mechanism used to produce them (Hawkins, 1993). Generally, fish sounds are predominantly composed of low frequencies (less than 3 kHz).

Since objects in the water scatter sound, fish are able to detect these objects through monitoring the ambient noise. Therefore, fish are probably able to detect prey, predators, conspecifics, and physical features by listening to environmental sounds (Hawkins, 1981). There are two sensory systems that enable fish to monitor the vibration-based information of their surroundings. The two sensory systems, the inner ear and the lateral line, constitute the acoustico-lateralis system.

Although the hearing sensitivities of very few fish species have been studied to date, it is becoming obvious that the intra- and inter-specific variability is considerable (Coombs, 1981). Nedwell *et al.* (2004) compiled and published available fish audiogram information. A noninvasive electrophysiological recording method known as auditory brainstem response is now commonly used in the production of fish audiograms (Yan, 2004). Generally, most fish have their best hearing in the low-frequency range (i.e., less than 1 kHz). Even though some fish are able to detect sounds in the ultrasonic frequency range, the thresholds at these higher frequencies tend to be considerably higher than those at the lower end of the auditory frequency range.

Literature relating to the impacts of sound on marine fish species can be divided into the following categories: (1) Pathological effects; (2) physiological effects; and (3) behavioral effects. Pathological effects include lethal and sub-lethal physical damage to fish; physiological effects include primary and secondary stress responses; and behavioral effects include changes in exhibited behaviors of fish. Behavioral changes might be a direct reaction to a detected sound or a result of the anthropogenic sound masking natural sounds that the fish normally detect and to which they respond. The three types of effects are often interrelated in complex ways. For example, some physiological and behavioral effects could potentially lead to the ultimate pathological effect of mortality. Hastings and Popper (2005) reviewed what is known about the effects of sound on fishes and identified studies needed to address areas of uncertainty relative to measurement of sound and the responses of fishes. Popper *et al.* (2003/2004) also published a paper that reviews the effects of anthropogenic sound on the behavior and physiology of fishes.

Potential effects of exposure to continuous sound on marine fish include TTS, physical damage to the ear region, physiological stress responses, and behavioral responses such as startle response, alarm response, avoidance, and perhaps lack of response due to masking of acoustic cues. Most of these effects appear to be either temporary or intermittent and therefore probably do not significantly impact the fish at a population level. The studies that resulted in physical damage to the fish ears used noise exposure levels and durations that were far more extreme than would be encountered under conditions similar to those expected during Buccaneer's proposed exploratory drilling activities.

The level of sound at which a fish will react or alter its behavior is usually well above the detection level. Fish have been found to react to sounds when the sound level increased to about 20 dB above the detection level of 120 dB (Ona, 1988); however, the response threshold can depend on the time of year and the fish's physiological condition (Engas *et al.,* 1993). In general, fish react more strongly to pulses of sound rather than a continuous signal (Blaxter *et al.,* 1981), such as the type of sound that will be produced by the drillship, and a quicker alarm response is elicited when the sound signal intensity rises rapidly compared to sound rising more slowly to the same level.

Investigations of fish behavior in relation to vessel noise (Olsen *et al.,* 1983; Ona, 1988; Ona and Godo, 1990) have shown that fish react when the sound from the engines and propeller exceeds a certain level. Avoidance reactions have been observed in fish such as cod and herring when vessels approached close enough that received sound levels are 110 dB to 130 dB (Nakken, 1992; Olsen, 1979; Ona and Godo, 1990; Ona and Toresen, 1988). However, other researchers have found that fish such as polar cod, herring, and capeline are often attracted to vessels (apparently by the noise) and swim toward the vessel (Rostad *et al.,* 2006). Typical sound source levels of vessel noise in the audible range for fish are 150 dB to 170 dB (Richardson *et al.,* 1995a). (Based on models, the 160 dB radius for the jack-up rig would extend approximately 33 ft [10 m]; therefore, fish would need to be in close proximity to the drill rig for the noise to be audible). In calm weather, ambient noise levels in audible parts of the spectrum lie between 60 dB to 100 dB.

Buccaneer also proposes to conduct VSP surveys with an airgun array for a short period of time during the drilling season (only a few hours over 1–2 days per well over the course of the entire proposed drilling program). Airguns produce impulsive sounds as opposed to continuous sounds at the source. Short, sharp sounds can cause overt or subtle changes in fish behavior. Chapman and Hawkins (1969) tested the reactions of whiting (hake) in the field to an airgun. When the airgun was fired, the fish dove from 82 to 180 ft (25 to 55 m) depth and formed a compact layer. The whiting dove when received sound levels were higher than 178 dB re 1 μPa (Pearson *et al.,* 1992).

Pearson *et al.* (1992) conducted a controlled experiment to determine effects of strong noise pulses on several species of rockfish off the California coast. They used an airgun with a source level of 223 dB re 1 μPa. They noted:

- Startle responses at received levels of 200–205 dB re 1 μPa and above for two sensitive species, but not for two other species exposed to levels up to 207 dB;
- Alarm responses at 177–180 dB for the two sensitive species, and at 186 to 199 dB for other species;
- An overall threshold for the above behavioral response at about 180 dB;
- An extrapolated threshold of about 161 dB for subtle changes in the behavior of rockfish; and
- A return to pre-exposure behaviors within the 20–60 minute exposure period.

In summary, fish often react to sounds, especially strong and/or intermittent sounds of low frequency. Sound pulses at received levels of 160 dB re 1 μPa may cause subtle changes in behavior. Pulses at levels of 180 dB may cause noticeable changes in behavior (Chapman and Hawkins, 1969;

Pearson *et al.,* 1992; Skalski *et al.,* 1992). It also appears that fish often habituate to repeated strong sounds rather rapidly, on time scales of minutes to an hour. However, the habituation does not endure, and resumption of the strong sound source may again elicit disturbance responses from the same fish. Underwater sound levels from the drill rig and other vessels produce sounds lower than the response threshold reported by Pearson *et al.* (1992), and are not likely to result in major effects to fish near the proposed drill sites.

Based on a sound level of approximately 140 dB, there may be some avoidance by fish of the area near the jack-up while drilling, around the rig under tow, and around other support and supply vessels when underway. Any reactions by fish to these sounds will last only minutes (Mitson and Knudsen, 2003; Ona *et al.,* 2007) longer than the vessel is operating at that location or the drill rig is drilling. Any potential reactions by fish would be limited to a relatively small area within about 33 ft (10 m) of the drill rig during drilling. Avoidance by some fish or fish species could occur within portions of this area.

The lease areas do not support major populations of cod, Pollock, and sole, although all four salmon species and smelt migrate through the area to spawning rivers in upper Cook Inlet (Shields and Dupuis, 2012). Residency time for the migrating finfish in the vicinity of an operating platform would be short-term, limiting fish exposure to noise associated with the proposed drilling program.

Some of the fish species found in Cook Inlet are prey sources for odontocetes and pinnipeds. A reaction by fish to sounds produced by Buccaneer's proposed operations would only be relevant to marine mammals if it caused concentrations of fish to vacate the area. Pressure changes of sufficient magnitude to cause that type of reaction would probably occur only very close to the sound source, if any would occur at all due to the low energy sounds produced by the majority of equipment proposed for use. Impacts on fish behavior are predicted to be inconsequential. Thus, feeding odontocetes and pinnipeds would not be adversely affected by this minimal loss or scattering, if any, which is not expected to result in reduced prey abundance. The proposed drilling area is not a common feeding area for baleen whales.

Potential Impacts From Drilling Discharges

The drill rig *Endeavour* will operate under the Alaska Pollutant Discharge Elimination System (APDES) general permit AKG–31–5021 for wastewater discharges (ADEC, 2012). This permit authorizes discharges from oil and gas extraction facilities engaged in exploration under the Offshore and Coastal Subcategories of the Oil and Gas Extraction Point Source Category (40 CFR Part 435). Twelve effluents are authorized for discharge into Cook Inlet once ADEC discharge limits have been met. The authorized discharges include: Drilling fluids and drill cuttings, deck drainage, sanitary waste, domestic waste, blowout preventer fluid, boiler blow down, fire control system test water, uncontaminated ballast water, bilge water, excess cement slurry, mud cuttings cement at sea floor, and completion fluids. Areas prohibited from discharge in the Cook Inlet are 10-meter (33-foot) isobaths, 5-meter (16-foot) isobaths, and other geographic area restrictions (AKG–31–5021.I.C.). The *Endeavour* is also authorized under EPA's Vessel General Permit for deck wash down and runoff, gray water, and gray water mixed with sewage discharges. The effluent limits and related requirements for these discharges in the Vessel General Permit are to minimize or eliminate to the extent achievable using control measures (best management practices) (EPA, 2011).

Drilling wastes include drilling fluids, known as mud, rock cuttings, and formation waters. Drilling wastes (non-hydrocarbon) will be discharged to the Cook Inlet under the approved APDES general permit. Drilling wastes (hydrocarbon) will be delivered to an onshore permitted location for disposal. During drilling, the onsite tool pusher/driller and qualified mud engineers will direct and maintain desired mud properties, and maintain the quantities of basic mud materials on site as dictated by good oilfield practice. Buccaneer will follow best management practices to ensure that a sufficient inventory of barite and lost circulation materials are maintained on the drilling vessel to minimize the possibility of a well upset and the likelihood of a release of pollutants to Cook Inlet waters. These materials can be re-supplied, if required, using the supply vessel. Because adverse weather could prevent immediate re-supply, sufficient materials will be available on board to completely rebuild the total circulating volume. Buccaneer will conduct an Environmental Monitoring Study of relevant hydrographic, sediment hydrocarbon, and heavy metal data from surveys conducted before and during drilling mud disposal and up to a least one year after drilling operations cease in accordance with the APDES general permit for discharges of drilling muds and cuttings.

Non-drilling wastewater includes deck drainage, sanitary waste, domestic waste, blowout preventer fluid, boiler blow down, fire control test water, bilge water, non-contact cooling water, and uncontaminated ballast water. Non-drilling wastewater will be discharged into Cook Inlet under the approved APDES general permit or delivered to an onshore permitted location for disposal. Mud cuttings will be constantly tested. No hydrocarboned muds will be permitted to be discharged into Cook Inlet. They will be hauled offsite. Solid waste (e.g., packaging, domestic trash) will be classified, segregated, and labeled as general, universal, and Resource Conservation and Recovery Act exempt or non-exempt waste. It will be stored in containers at designated accumulation areas. Then, it will be packaged and palletized for transport to an approved on-shore disposal facility. No hazardous wastes should not be generated as a result of this project. However, if any hazardous wastes were generated, it would be temporarily stored in an onboard satellite accumulation area and then transported offsite for disposal at an approved facility.

With oil and gas platforms presently operating in Cook Inlet, there is concern for continuous exposure to potentially toxic heavy metals and metalloids (i.e., mercury, lead, cadmium, copper, zinc, and arsenic) that are associated with oil and gas development and production. These elements occur naturally in the earths' crust and the oceans but many also have anthropogenic origins from local sources of pollution or from contamination from atmospheric distribution.

Discharging drill cuttings or other liquid waste streams generated by the drilling vessel could potentially affect marine mammal habitat. Toxins could persist in the water column, which could have an impact on marine mammal prey species. However, despite a considerable amount of investment in research on exposures of marine mammals to organochlorines or other toxins, there have been no marine mammal deaths in the wild that can be conclusively linked to the direct exposure to such substances (O'Shea, 1999).

Drilling muds and cuttings discharged to the seafloor can lead to localized

increased turbidity and increase in background concentrations of barium and occasionally other metals in sediments and may affect lower trophic organisms. Drilling muds are composed primarily of bentonite (clay), and the toxicity is therefore low. Heavy metals in the mud may be absorbed by benthic organisms, but studies have shown that heavy metals do not bio-magnify in marine food webs (Neff *et al.,* 1989). Effects on benthic communities are nearly always restricted to a zone within about 328 to 492 ft (100 to 150 m) of the discharge, where cuttings accumulations are greatest. Discharges and drill cuttings could impact fish by displacing them from the affected area.

Beluga whales analyzed for heavy metals and other elements (cadmium, mercury, selenium, vanadium, and silver) were generally lower in the livers of Cook Inlet animals than in the other beluga whale stocks, while copper was higher (Becker *et al.,* 2001). Hepatic methyl mercury levels were similar to those reported for other beluga whales (Geraci and St. Aubin, 1990). The relatively high hepatic concentration of silver found in the eastern Chukchi Sea and Beaufort Sea stocks of belugas was also found in the Cook Inlet animals, suggesting a species-specific phenomenon. However, because of the limited discharges no water quality impacts are anticipated that would negatively affect habitat for Cook Inlet marine mammals.

Potential Impacts From Drill Rig Presence

The horizontal dimensions of the jack-up rig are 160 ft by 35 ft (48.8 m by 10.7 m). The dimensions of the drill rig (less than one football field on either side) are not significant enough to cause a large-scale diversion from the animals' normal swim and migratory paths. Any deflection of marine mammal species due to the physical presence of the drill rig would be very minor. The drill rig's physical footprint is small relative to the size of the geographic region it will occupy and will likely not cause marine mammals to deflect greatly from their typical migratory route. Also, even if animals may deflect because of the presence of the drill rig, Cook Inlet is much larger in size than the length of the drill rig (many dozens of miles vs. less than one football field), and animals would have other means of passage around the drill rig. In sum, the physical presence of the drill rig is not likely to cause a significant deflection to migrating marine mammals.

Potential Impacts From an Oil Spill

Lower trophic organisms and fish species are primary food sources for marine mammals likely to be found in the proposed project vicinity. Any diminishment of feeding habitat during the summer months due to an oil spill or response could affect the energy balance of marine mammals. If oil found its way into upper Cook Inlet in the area of the Susitna and Little Susitna rivers during the summer months, a large portion of Cook Inlet beluga whale Area 1 critical habitat could be impacted. If an oil spill were to occur later in the season, it could become trapped in or under the ice or travel with the thinner ice pans.

Due to their wide distribution, large numbers, and rapid rate of regeneration, the recovery of marine invertebrate populations is expected to occur soon after the surface oil passes. Spill response activities are not likely to disturb the prey items of whales or seals sufficiently to cause more than minor effects. Spill response activities could cause marine mammals to avoid the disturbed habitat that is being cleaned. However, by causing avoidance, animals would avoid impacts from the oil itself. Additionally, the likelihood of an oil spill is expected to be very low, as discussed earlier in this document.

Based on the preceding discussion of potential types of impacts to marine mammal habitat, overall, the proposed specified activity is not expected to cause significant impacts on habitats used by the marine mammal species in the proposed project area or on the food sources that they utilize.

Proposed Mitigation

In order to issue an incidental take authorization (ITA) under section 101(a)(5)(D) of the MMPA, NMFS must set forth the permissible methods of taking pursuant to such activity, and other means of effecting the least practicable impact on such species or stock and its habitat, paying particular attention to rookeries, mating grounds, and areas of similar significance, and on the availability of such species or stock for taking for certain subsistence uses (where relevant). Later in this document in the ''Proposed Incidental Harassment Authorization'' section, NMFS lays out the proposed conditions for review, as they would appear in the final IHA (if issued).

While the drill rig does not emit sound levels that require shutdowns to avoid Level A harassment (injury), because take of beluga whales is not authorized, shutdown procedures will be required to avoid Level B take of this species. For continuous sounds, such as those produced by drilling operations and rig tow, NMFS uses a received level of 120-dB (rms) to indicate the onset of Level B harassment. For impulse sounds, such as those produced by the airgun array during the VSP surveys or the impact hammer during conductor pipe driving, NMFS uses a received level of 160-dB (rms) to indicate the onset of Level B harassment. The current Level A (injury) harassment threshold is 180 dB (rms) for cetaceans and 190 dB (rms) for pinnipeds. Table 1 in this document outlines the various applicable radii for which different mitigation measures would apply.

TABLE 1—APPLICABLE MITIGATION AND SHUTDOWN RADII FOR BUCCANEER'S PROPOSED UPPER COOK INLET EXPLORATORY DRILLING PROGRAM

	190 dB radius	180 dB radius	160 dB radius	120 dB radius
Impact hammer during conductor pipe driving	60 m (200 ft)	250 m (820 ft)	2 km (1.24 mi)	NA.
Airguns during VSP	75 m (246 ft)	240 m (787 ft)	2.5 km (1.55 mi)	NA.
Rig tow	NA	NA	NA	600 m (2,000 ft).
Deep well pumps on the jack-up rig	NA	NA	NA	260 m (853 ft).

Rig tow source levels do not exceed 171 dB (rms); Jack-up rig source levels without deep well pumps is below ambient sound levels; NA = Not applicable.

Mitigation Measures Proposed by Buccaneer

For the proposed mitigation measures, Buccaneer listed the following protocols to be implemented during its exploratory drilling program in Cook Inlet.

1. Conductor Pipe Driving Measures

Protected species observers (PSOs) will observe from the drill rig during this 2–3 day portion of the proposed program out to the 160 dB (rms) radius of 2 km (1.24 mi). If marine mammal species for which take is not authorized enter this zone, then use of the impact hammer will cease. If cetaceans for which take is authorized enter within the 180 dB (rms) radius of 250 m (820 ft) or if pinnipeds for which take is authorized enter within the 190 dB (rms) radius of 60 m (200 ft), then use of the impact hammer will cease. Following a shutdown of impact hammering activities, the applicable zones must be clear of marine mammals for at least 30 minutes prior to restarting activities.

Buccaneer proposes to follow a ramp-up procedure during impact hammering activities. PSOs will visually monitor out to the 160 dB radius for at least 30 minutes prior to the initiation of activities. If no marine mammals are detected during that time, then Buccaneer can initiate impact hammering using a ''soft start'' technique. Hammering will begin with an initial set of three strikes at 40 percent energy followed by a 1 min waiting period, then two subsequent three-strike sets. This ''soft-start'' procedure will be implemented anytime impact hammering has ceased for 30 minutes or more. Impact hammer ''soft-start'' will not be required if the hammering downtime is for less than 30 minutes and visuals surveys are continued throughout the silent period and no marine mammals are observed in the applicable zones during that time. Monitoring will occur during all hammering sessions.

2. VSP Airgun Measures

PSOs will observe from the drill rig during this 1–2 day portion of the proposed program out to the 160 dB radius of 2.5 km (1.55 mi). If marine mammal species for which take is not authorized enter this zone, then use of the airguns will cease. If cetaceans for which take is authorized enter within the 180 dB (rms) radius of 240 m (787 ft) or if pinnipeds for which take is authorized enter within the 190 dB (rms) radius of 75 m (246 ft), then use of the airguns will cease. Following a shutdown of airgun operations, the applicable zones must be clear of marine mammals for at least 30 minutes prior to restarting activities.

Buccaneer proposes to follow a ramp-up procedure during airgun operations. PSOs will visually monitor out to the 160 dB radius for at least 30 minutes prior to the initiation of activities. If no marine mammals are detected during that time, then Buccaneer can initiate airgun operations using a ''ramp-up'' technique. Airgun operations will begin with the firing of a single airgun, which will be the smallest gun in the array in terms of energy output (dB) and volume (in^3). Operators will then continue ramp-up by gradually activating additional airguns over a period of at least 30 minutes (but not longer than 40 minutes) until the desired operating level of the airgun array is obtained. This ramp-up procedure will be implemented anytime airguns have not been fired for 30 minutes or more. Airgun ramp-up will not be required if the airguns have been off for less than 30 minutes and visuals surveys are continued throughout the silent period and no marine mammals are observed in the applicable zones during that time. Monitoring will occur during all airgun usage.

3. Rig Tow and Drill Rig Operation

As mentioned previously, these activities do not generate sounds that require implementation of mitigation measures to avoid injury. However, PSOs will be stationed on the helicopter platform (bow) of the drill rig (positioned about 100 ft above the waterline) to watch for marine mammals. With the exception of the operation of the deep-well pump on the jack-up rig, the other machinery generates sound levels below ambient. PSOs will observe from the drill rig during this portion of the proposed program out to the 120 dB radius of 260 m (853 ft). If marine mammal species for which take is not authorized enter this zone, then the deep well pumps will be turned off. The PSOs will operate from multiple stations on the rig, recognizing that the shutdown radius begins from the submersed pump housed inside the forward jack-up leg.

4. Oil Spill Plan

Buccaneer developed an ODPCP. ADEC approved Buccaneer's ODPCP on August 29, 2012. NMFS reviewed the ODPCP during the ESA consultation process and found that with implementation of the safety features mentioned above that the risk of an oil spill was discountable.

5. Pollution Discharge Plan

When the drill rig is towed or otherwise floating it is classified as a vessel (like a barge). During those periods, it is covered under a form of National Pollutant Discharge Elimination System permit known as a Vessel General Permit. This permit remains federal and is a ''no discharge permit,'' which allows for the discharge of storm water and closed system fire suppression water but no other effluents.

When the legs are down, the drill rig becomes a facility. During those periods, it is covered under an approved APDES. Under the APDES, certain discharges are permitted. However, Buccaneer is not permitted to discharge gray water, black water, or hydrocarboned muds. They are all hauled off and not discharged.

Mitigation Measures Proposed by NMFS

NMFS proposes that when Buccaneer utilizes helicopters for support operations that the helicopters must maintain an altitude of at least 1,000 ft (305 m), except during takeoffs, landings, or emergency situations.

Mitigation Conclusions

NMFS has carefully evaluated Buccaneer's proposed mitigation measures and considered a range of other measures in the context of ensuring that NMFS prescribes the means of effecting the least practicable impact on the affected marine mammal species and stocks and their habitat. Our evaluation of potential measures included consideration of the following factors in relation to one another:

- The manner in which, and the degree to which, the successful implementation of the measures are expected to minimize adverse impacts to marine mammals;
- The proven or likely efficacy of the specific measure to minimize adverse impacts as planned; and
- The practicability of the measure for applicant implementation.

Any mitigation measure(s) prescribed by NMFS should be able to accomplish, have a reasonable likelihood of accomplishing (based on current science), or contribute to the accomplishment of one or more of the general goals listed below:

1. Avoidance or minimization of injury or death of marine mammals wherever possible (goals 2, 3, and 4 may contribute to this goal).

2. A reduction in the numbers of marine mammals (total number or number at biologically important time or location) exposed to received levels

of seismic airguns, impact hammers, drill rig deep well pumps, or other activities expected to result in the take of marine mammals (this goal may contribute to 1, above, or to reducing harassment takes only).

3. A reduction in the number of times (total number or number at biologically important time or location) individuals would be exposed to received levels of seismic airguns impact hammers, drill rig deep well pumps, or other activities expected to result in the take of marine mammals (this goal may contribute to 1, above, or to reducing harassment takes only).

4. A reduction in the intensity of exposures (either total number or number at biologically important time or location) to received levels of seismic airguns impact hammers, drill rig deep well pumps, or other activities expected to result in the take of marine mammals (this goal may contribute to 1, above, or to reducing the severity of harassment takes only).

5. Avoidance or minimization of adverse effects to marine mammal habitat, paying special attention to the food base, activities that block or limit passage to or from biologically important areas, permanent destruction of habitat, or temporary destruction/disturbance of habitat during a biologically important time.

6. For monitoring directly related to mitigation—an increase in the probability of detecting marine mammals, thus allowing for more effective implementation of the mitigation.

Based on our evaluation of the applicant's proposed measures, as well as other measures considered by NMFS, NMFS has preliminarily determined that the proposed mitigation measures provide the means of effecting the least practicable impact on marine mammals species or stocks and their habitat, paying particular attention to rookeries, mating grounds, and areas of similar significance.

Proposed Monitoring and Reporting

In order to issue an ITA for an activity, section 101(a)(5)(D) of the MMPA states that NMFS must set forth ''requirements pertaining to the monitoring and reporting of such taking''. The MMPA implementing regulations at 50 CFR 216.104 (a)(13) indicate that requests for ITAs must include the suggested means of accomplishing the necessary monitoring and reporting that will result in increased knowledge of the species and of the level of taking or impacts on populations of marine mammals that are expected to be present in the proposed action area. Buccaneer submitted information regarding marine mammal monitoring to be conducted during seismic operations as part of the IHA application. That information can be found in Appendix C of the application. The monitoring measures may be modified or supplemented based on comments or new information received from the public during the public comment period.

Monitoring measures proposed by the applicant or prescribed by NMFS should accomplish one or more of the following top-level goals:

1. An increase in our understanding of the likely occurrence of marine mammal species in the vicinity of the action, i.e., presence, abundance, distribution, and/or density of species.

2. An increase in our understanding of the nature, scope, or context of the likely exposure of marine mammal species to any of the potential stressor(s) associated with the action (e.g. sound or visual stimuli), through better understanding of one or more of the following: The action itself and its environment (e.g. sound source characterization, propagation, and ambient noise levels); the affected species (e.g. life history or dive pattern); the likely co-occurrence of marine mammal species with the action (in whole or part) associated with specific adverse effects; and/or the likely biological or behavioral context of exposure to the stressor for the marine mammal (e.g. age class of exposed animals or known pupping, calving or feeding areas).

3. An increase in our understanding of how individual marine mammals respond (behaviorally or physiologically) to the specific stressors associated with the action (in specific contexts, where possible, e.g., at what distance or received level).

4. An increase in our understanding of how anticipated individual responses, to individual stressors or anticipated combinations of stressors, may impact either: The long-term fitness and survival of an individual; or the population, species, or stock (e.g. through effects on annual rates of recruitment or survival).

5. An increase in our understanding of how the activity affects marine mammal habitat, such as through effects on prey sources or acoustic habitat (e.g., through characterization of longer-term contributions of multiple sound sources to rising ambient noise levels and assessment of the potential chronic effects on marine mammals).

6. An increase in understanding of the impacts of the activity on marine mammals in combination with the impacts of other anthropogenic activities or natural factors occurring in the region.

7. An increase in our understanding of the effectiveness of mitigation and monitoring measures.

8. An increase in the probability of detecting marine mammals (through improved technology or methodology), both specifically within the safety zone (thus allowing for more effective implementation of the mitigation) and in general, to better achieve the above goals.

Proposed Monitoring Measures

1. Visual Monitoring

PSOs will be required to monitor the area for marine mammals aboard the drill rig during rig tow, exploratory drilling operations, conductor pipe driving, and VSP operations. Standard marine mammal observing field equipment will be used, including reticule binoculars, Big-eye binoculars, inclinometers, and range-finders. If conductor pipe driving or VSP operations occur at night, PSOs will be equipped with night scopes. At least one PSO will be on duty at all times when operations are occurring. Shifts shall not last more than 4 hours, and PSOs will not observe for more than 12 hours in a 24-hour period.

2. Sound Source Verification Monitoring

A sound source verification (SSV) of the underwater sound pressures emanating from the active drilling rig will be conducted by an acoustical engineer. The measurements would be made in a boat that is drifting near the rig in the current. Measuring while drifting will minimize the noise contamination caused by strumming of the hydrophone lines and flow noise. Measurements will be made with a two-channel system that will provide measurements at two specified depths up to 100 feet. The underwater sound levels would be measured using hydrophones, sound level meters, and recording devices.

Measurements would be made by hydrophones that have a flat frequency response and are omnidirectional over a frequency range of 10 to 20,000 Hz. The signals shall be fed into an appropriate date-logging device, such as an integrating sound level meter. The systems will have the capability to make quality recordings using a digital audio recorder (either solid state or tape). The accuracy of the measurement system shall be 1 dB from 10 to 10,000 Hz referenced to 1 micro Pascal (μPa). The measurement system shall be able to

measure the unweighted or C-weighted root-mean-square (rms) sound pressure levels in dB referenced to 1 μPa. The measurement systems will have the capability to provide a real time readout display of underwater sound levels. The real-time display shall provide the unweighted peak sound pressure and the sound pressure level. During drilling, measurements were made out to beyond the 120 dB isopleth. During any other activity (e.g., conductor driving and VSP operations), measurements were or will be made to at least one kilometer from the rig. To date, SSVs have been conducted for drilling operations, generators, submersed pumps, and VSP operations (I&R, 2013a, b, c). SSV of the conductor pipe driving activity is planned to occur.

Recordings of sounds will be conducted so that subsequent analysis could be provided and certain sounds could be identified or at least described. The subsequent analysis would include providing frequency spectra for different sounds or distances from the rig. The spectra data would be provided in ⅓rd octave bands for sounds in the 10 to 10,000 Hz range.

In addition to the underwater sound measurements, measurements of sea temperature, wind speed, and sea state will be (or were) taken as well.

Reporting Measures

1. SSV Report

The SSV report will describe the source of the sound, the environment, the measurements, and the methodology employed to make the measurements. Results will be presented as overall sound pressure levels and displays of 1/3rd octave band sound levels. Preliminary findings relative to the 120 dB, 160 dB, 180 dB, and 190 dB isopleths will be provided within 1 week of SSV completion.

2. 90-Day Technical Report

Daily field reports will be prepared that include daily activities, marine mammal monitoring efforts, and a record of the marine mammals and their behaviors and reactions observed that day. These daily reports will be used to help generate the 90-day technical report. A report will be due to NMFS no later than 90 days after the expiration of the IHA (if issued). The Technical Report will include the following:

- Summaries of monitoring effort (e.g., total hours, total distances, and marine mammal distribution through the study period, accounting for sea state and other factors affecting visibility and detectability of marine mammals).
- Analyses of the effects of various factors influencing detectability of marine mammals (e.g., sea state, number of observers, and fog/glare).
- Species composition, occurrence, and distribution of marine mammal sightings, including date, water depth, numbers, age/size/gender categories (if determinable), group sizes, and ice cover.
- Analyses of the effects of operations.
- Sighting rates of marine mammals (and other variables that could affect detectability), such as: (i) Initial sighting distances versus operational activity state; (ii) closest point of approach versus operational activity state; (iii) observed behaviors and types of movements versus operational activity state; (iv) numbers of sightings/individuals seen versus operational activity state; (v) distribution around the drill rig versus operational activity state; and (vi) estimates of take by Level B harassment based on presence in the Level B harassment zones.

3. Notification of Injured or Dead Marine Mammals

In the unanticipated event that the specified activity clearly causes the take of a marine mammal in a manner prohibited by the IHA (if issued), such as an injury (Level A harassment), serious injury or mortality (e.g., ship-strike, gear interaction, and/or entanglement), Buccaneer would immediately cease the specified activities and immediately report the incident to the Chief of the Permits and Conservation Division, Office of Protected Resources, NMFS, and the Alaska Regional Stranding Coordinators. The report would include the following information:

- Time, date, and location (latitude/longitude) of the incident;
- Name and type of vessel involved;
- Vessel's speed during and leading up to the incident;
- Description of the incident;
- Status of all sound source use in the 24 hours preceding the incident;
- Water depth;
- Environmental conditions (e.g., wind speed and direction, Beaufort sea state, cloud cover, and visibility);
- Description of all marine mammal observations in the 24 hours preceding the incident;
- Species identification or description of the animal(s) involved;
- Fate of the animal(s); and
- Photographs or video footage of the animal(s) (if equipment is available).

Activities would not resume until NMFS is able to review the circumstances of the prohibited take. NMFS would work with Buccaneer to determine what is necessary to minimize the likelihood of further prohibited take and ensure MMPA compliance. Buccaneer would not be able to resume their activities until notified by NMFS via letter, email, or telephone.

In the event that Buccaneer discovers an injured or dead marine mammal, and the lead PSO determines that the cause of the injury or death is unknown and the death is relatively recent (i.e., in less than a moderate state of decomposition as described in the next paragraph), Buccaneer would immediately report the incident to the Chief of the Permits and Conservation Division, Office of Protected Resources, NMFS, and the NMFS Alaska Stranding Hotline and/or by email to the Alaska Regional Stranding Coordinators. The report would include the same information identified in the paragraph above. Activities would be able to continue while NMFS reviews the circumstances of the incident. NMFS would work with Buccaneer to determine whether modifications in the activities are appropriate.

In the event that Buccaneer discovers an injured or dead marine mammal, and the lead PSO determines that the injury or death is not associated with or related to the activities authorized in the IHA (e.g., previously wounded animal, carcass with moderate to advanced decomposition, or scavenger damage), Buccaneer would report the incident to the Chief of the Permits and Conservation Division, Office of Protected Resources, NMFS, and the NMFS Alaska Stranding Hotline and/or by email to the Alaska Regional Stranding Coordinators, within 24 hours of the discovery. Buccaneer would provide photographs or video footage (if available) or other documentation of the stranded animal sighting to NMFS and the Marine Mammal Stranding Network.

Estimated Take by Incidental Harassment

Except with respect to certain activities not pertinent here, the MMPA defines ''harassment'' as: any act of pursuit, torment, or annoyance which (i) has the potential to injure a marine mammal or marine mammal stock in the wild [Level A harassment]; or (ii) has the potential to disturb a marine mammal or marine mammal stock in the wild by causing disruption of behavioral patterns, including, but not limited to, migration, breathing, nursing, breeding, feeding, or sheltering [Level B harassment]. Only take by Level B behavioral harassment of some species

is anticipated as a result of the proposed drilling program. Anticipated impacts to marine mammals are associated with noise propagation from the sound sources (e.g., drill rig and tow, airguns, and impact hammer) used in the drilling program. Additional disturbance to marine mammals may result from visual disturbance of the drill rig or support vessels. No take is expected to result from vessel strikes because of the slow speed of the vessels (2–4 knots while rig is under two; 7–8 knots of supply barges).

Buccaneer requests authorization to take six marine mammal species by Level B harassment. These six marine mammal species are: Gray whale; minke whale; killer whale; harbor porpoise; Dall's porpoise; and harbor seal. Take of Cook Inlet beluga whales is not requested, expected, or proposed to be authorized. NMFS Section 7 ESA biologists concluded that Buccaneer's proposed exploratory drilling program is not likely to adversely affect Cook Inlet beluga whales. Mitigation measures requiring shutdowns of activities before belugas enter the Level B harassment zones will be required in any issued IHA.

As noted previously in this document, for continuous sounds, such as those produced by drilling operations and rig tow, NMFS uses a received level of 120-dB (rms) to indicate the onset of Level B harassment. For impulse sounds, such as those produced by the airgun array during the VSP surveys or the impact hammer during conductor pipe driving, NMFS uses a received level of 160-dB (rms) to indicate the onset of Level B harassment. The current Level A (injury) harassment threshold is 180 dB (rms) for cetaceans and 190 dB (rms) for pinnipeds. Table 2 outlines the current acoustic criteria.

TABLE 2—CURRENT ACOUSTIC EXPOSURE CRITERIA USED BY NMFS

Criterion	Criterion definition	Threshold
Level A Harassment (injury)	Permanent Threshold Shift (PTS) (Any level above that which is known to cause TTS)	180 dB re 1 microPa-m (cetaceans)/190 dB re 1 microPa-m (pinnipeds) root mean square (rms).
Level B Harassment	Behavioral Disruption (for impulse noises)	160 dB re 1 microPa-m (rms).
Level B Harassment	Behavioral Disruption (for continuous, noise)	120 dB re 1 microPa-m (rms).

Section 6 of Buccaneer's application contains a description of the methodology used by Buccaneer to estimate takes by harassment, including calculations for the 120 dB (rms) and 160 dB (rms) isopleths and marine mammal densities in the areas of operation (see **ADDRESSES**), which is also provided in the following sections. NMFS verified Buccaneer's methods, and used the density and sound isopleth measurements in estimating take. However, NMFS also include a duration factor in the estimates presented below, which is not included in Buccaneer's application.

Simply, the proposed take estimates presented in this section for harbor porpoise and harbor seal were calculated by multiplying summer density for the species (which constitutes the best available density information) by the area of ensonification for each type of activity by the total number of days that each activity would occur. For the other four species (minke, gray, and killer whales and Dall's porpoise), there are no available density estimates because of their low occurrence rates in Cook Inlet. Therefore, take requests for those species are based on opportunistic sightings data and typical group size for each species. Additional detail is provided next.

Ensonified Areas

1. Rig Tow

The jack-up rig will be towed three times during 2014. It is estimated that the longer tows will take 2 days to complete. The rig will be wet-towed by at least two ocean-going tugs licensed to operate in Cook Inlet. Tugs generate their loudest sounds while towing due to propeller cavitation. While these continuous sounds have been measured at up to 171 dB re 1 μPa-m (rms) at source (broadband), they are generally emitted at dominant frequencies of less than 5 kHz (Miles *et al.,* 1987; Richardson *et al.,* 1995; Simmonds *et al.,* 2004).

For the most part, the dominant noise frequencies from propeller cavitation are less than the dominant hearing frequencies for pinnipeds and toothed whales. Because it is currently unknown which tug or tugs will be used to tow the rig, and there are few sound signatures for tugs in general, the potential area that could be ensonified by disturbance-level noise is calculated based on an assumed 171 dB re 1 μPa-m source. Using Collins *et al.*'s (2007) 171—18.4 Log(R)—0.00188 spreading model determine from hydroacoustic surveys in Cook Inlet, the distance to the 120 dB isopleth would be at 1,715 ft (523 m). The associated ZOI (area ensonified by noise greater than 120 dB) is, therefore, 212 acres (0.86 km^2).

2. Conductor Pipe Driving

The Delmar D62–22 diesel impact hammer proposed to be used by Buccaneer to drive the 30-inch conductor pipe was previously acoustically measured by Blackwell (2005) in upper Cook Inlet. She found that sound exceeding 190 dB Level A noise limits for pinnipeds extend to about 200 feet (60 meters), and 180 dB Level A impacts to cetaceans to about 820 feet (250 meters). Level B disturbance levels of 160 dB extended to just less than 1.2 miles (1.9 kilometers). The associated ZOI (area ensonified by noise greater than 160 dB) is 4.4 mi^2 (11.3 km^2).

3. Deep-Well Pumps (Jack-Up Rig)

Buccaneer proposes to use the jack-up drilling rig *Endeavour* for the Cook Inlet program. Because the drilling platform and other noise-generating equipment on a jack-up rig are located above the sea's surface, and there is very little surface contact with the water compared to drill ships and semisubmersible drill rigs, lattice-legged jack-up drill rigs are relatively quiet (Richardson *et al.,* 1995; Spence *et al.,* 2007).

The *Spartan 151,* the only other jack-up drill rig currently operating in the Cook Inlet, was hydroacoustically measured by Marine Acoustics, Inc. (2011) in 2011. The survey results showed that continuous noise levels exceeding 120 dB re 1 μPa extended out only 50 m (164 ft), and that this noise was largely associated with the diesel engines used as hotel power generators, rather than the drilling table. Similar, or lesser, noise levels were expected to be generated by the *Endeavour* because generators are mounted on pedestals specifically to reduce noise transfer through the infrastructure, and enclosed

in an insulated engine room, with the intent of reducing underwater noise transmission to levels even lower than the *Spartan 151.* This was confirmed during an SSV test on the *Endeavour* by Illingworth and Rodkin (2013a) in May 2013 where it was determined that the noise levels associated with drilling and operating generators are below ambient.

However, the SSV identified another sound source, the submersed deep-well pumps, which were emitting underwater noise exceeding 120 dB. In the initial testing (I&R 2013a), the noise from the pump and the associated falling (from deck level) water discharge was found to exceed 120 dB re 1 μPa out a distance just beyond 984 ft (300 m). After the falling water was piped as a mitigation measure to reduce noise levels, the pump noise was retested (I&R 2013b) with the results indicating that the primary deep-well pump, operating inside the bow leg, still exceeded 120 dB re 1 μPa at a maximum of 853 ft (260 m). For calculating potential incidental harassment take, the 853-ft (260-m) distance to the 120 dB isopleth will be used giving a ZOI of 52.5 acres (0.21 km^2).

4. VSP Airguns

Illingworth and Rodkin (2013c) measured noise levels during VSP operations associated with Buccaneer post-drilling operations at the Cosmopolitan # 1 site in lower Cook Inlet during July 2013. The results indicated that the 720 cubic inch airgun array used during the operation produced noise levels exceeding 160 dB re 1 μPa out to a distance of approximately 8,100 ft (2,470 m). Based on these results, the associated ZOI would be 7.4 mi^2 (19.2 km^2).

Marine Mammal Densities

Density estimates were derived for harbor porpoises and harbor seals as described next. Because of their low numbers, there are no available Cook Inlet density estimates for the other marine mammals that occasionally inhabit Cook Inlet north of Anchor Point.

1. Harbor Porpoise

Hobbs and Waite (2010) calculated a Cook Inlet harbor porpoise density estimate of 0.013 per km^2 based on sightings recorded during a summer 1998 aerial survey targeting beluga whales. They derived the value by dividing estimated number of harbor porpoise inhabiting Cook Inlet (249) by the area of the entire inlet (18,948 km^2).

2. Harbor Seal

Boveng *et al.* (2003) estimated the harbor seal population that inhabits Cook Inlet at 5,268 seals based on summer/early fall surveys. Dividing that value by the area of the inlet (18,948 km^2) provides a Cook Inlet-wide density of 0.278 seals per km^2.

Proposed Take Estimates

As noted previously in this document, the potential number of harbor porpoises and harbor seals that might be exposed to received continuous SPLs of ≥120 dB re 1 μPa (rms) and pulsed SPLs of ≥160 dB re 1 μPa (rms) was calculated by multiplying:

- The expected species density;
- the anticipated area to be ensonified by the 120 dB re 1 μPa (rms) SPL (rig tow and deep-well pumps) and 160 dB re 1 μPa (rms) SPL (VSP airgun operations and impact hammering); and
- the estimated total duration of each of the activities expressed in days (24 hrs).

To derive at an estimated total duration for each of the activities the following assumptions were made:

- The total duration for rig tow over the entire season would be 5 days.
- It is estimated to take between 30 and 75 days to drill one well. Assuming the maximum time needed to drill a well and that up to two wells may be drilled under this IHA (if issued), the total duration of deep-well pump usage for two wells would be 150 days.
- The total duration of impact hammering during conductor pipe driving for two wells would be 6 days.
- The total duration of the two VSP data acquisition runs is estimated to be 4 days.

Using all of these assumptions, Table 3 outlines the total number of Level B harassment exposures for harbor seals and harbor porpoises from each of the four activities.

TABLE 3—POTENTIAL NUMBER OF EXPOSURES TO LEVEL B HARASSMENT THRESHOLDS DURING BUCCANEER'S PROPOSED EXPLORATORY DRILLING PROGRAM DURING THE 2014 OPEN WATER SEASON

Species	Rig tow	Deep-well pump	Pipe driving	VSP	Total
Harbor porpoise	0.05	3	0.9	1	5
Harbor Seal	1.2	9	18.8	21.4	51

For the less common marine mammals such as gray, minke, killer whales, and Dall's porpoise, population estimates within central and upper Cook Inlet are too small to calculate density estimates. Still, at even very low densities, it is possible to encounter these marine mammals during Buccaneer operations, especially during towing operations through lower Cook Inlet. Marine mammals may approach the drilling rig out of curiosity, and animals may approach in a group. Thus, requested take authorizations for these species are primarily based on group size and the potential for attraction.

Table 4 here outlines the density estimates used to estimate Level B takes, the proposed Level B harassment take levels, the abundance of each species in Cook Inlet, the percentage of each species or stock estimated to be taken, and current population trends.

TABLE 4—DENSITY ESTIMATES, PROPOSED LEVEL B HARASSMENT TAKE LEVELS, SPECIES OR STOCK ABUNDANCE, PERCENTAGE OF POPULATION PROPOSED TO BE TAKEN, AND SPECIES TREND STATUS

Species	Density (#/km^2)	Proposed Level B take	Abundance	Percentage of population	Trend
Harbor Seal	0.278	51	22,900	0.22	Stable.
Harbor Porpoise	0.013	5	25,987	0.02	No reliable information.
Killer Whale	NA	5	1,123 (resident)	0.45	Resident stock possibly increasing.
			552 (transient)	0.91	Transient stock stable.

TABLE 4—DENSITY ESTIMATES, PROPOSED LEVEL B HARASSMENT TAKE LEVELS, SPECIES OR STOCK ABUNDANCE, PERCENTAGE OF POPULATION PROPOSED TO BE TAKEN, AND SPECIES TREND STATUS—Continued

Species	Density (#/km^2)	Proposed Level B take	Abundance	Percentage of population	Trend
Gray whale	NA	2	18,017	0.01	Stable/increasing.
Minke whale	NA	2	810–1,233	0.16–0.25	No reliable information.
Dall's porpoise	NA	5	83,400	0.01	No reliable information.

Analysis and Preliminary Determinations

Negligible Impact

Negligible impact is ''an impact resulting from the specified activity that cannot be reasonably expected to, and is not reasonably likely to, adversely affect the species or stock through effects on annual rates of recruitment or survival'' (50 CFR 216.103). A negligible impact finding is based on the lack of likely adverse effects on annual rates of recruitment or survival (i.e., population-level effects). An estimate of the number of Level B harassment takes, alone, is not enough information on which to base an impact determination. In addition to considering estimates of the number of marine mammals that might be ''taken'' through behavioral harassment, NMFS must consider other factors, such as the likely nature of any responses (their intensity, duration, etc.), the context of any responses (critical reproductive time or location, feeding, migration, etc.), as well as the number and nature of estimated Level A harassment takes, the number of estimated mortalities, effects on habitat, and the status of the species.

No injuries or mortalities are anticipated to occur as a result of Buccaneer's proposed exploratory drilling program, and none are proposed to be authorized. Injury, serious injury, or mortality could occur if there were a large or very large oil spill. However, as discussed previously in this document, the likelihood of a spill is extremely remote. Buccaneer has implemented many design and operational standards to mitigate the potential for an oil spill of any size. NMFS does not propose to authorize take from an oil spill, as it is not part of the specified activity. Additionally, animals in the area are not expected to incur hearing impairment (i.e., TTS or PTS) or non-auditory physiological effects. Instead, any impact that could result from Buccaneer's activities is most likely to be behavioral harassment and is expected to be of limited duration.

None of the species for which take is proposed to be authorized are listed as threatened or endangered under the ESA nor as depleted under the MMPA. Additionally, no critical habitat exists for these species. Buccaneer's proposed exploratory drilling program will occur south of critical habitat designated as priority Area 1 for Cook Inlet beluga whales, but activities will occur in habitat designated as priority Area 2. During the proposed period of operations, the majority of Cook Inlet beluga whales will be in Area 1 critical habitat, north of the proposed drilling area. The proposed activities are not anticipated to destroy or adversely modify beluga whale critical habitat, and mitigation measures and safety protocols are in place to reduce any potential even further.

Sound levels emitted during the proposed program are anticipated to be low. The continuous sounds produced by the drill rig do not even rise to the level thought to cause auditory injury in marine mammals. Additionally, impact hammering and airgun operations will occur for extremely limited time periods (for a few hours at a time for 1–3 days per well and for a few hours at a time for 1–2 days per well, respectively). Moreover, auditory injury has not been noted in marine mammals from these activities either. Mitigation measures proposed for inclusion in any issued IHA will reduce these potentials even further.

Potential impacts to marine mammal habitat were discussed previously in this document (see the ''Anticipated Effects on Habitat'' section). Although some disturbance is possible to food sources of marine mammals, the impacts are anticipated to be minor enough as to not affect annual rates of recruitment or survival of marine mammals in the area. Based on the size of Cook Inlet where feeding by marine mammals occurs versus the localized area of drilling program activities, any missed feeding opportunities in the direct project area would be minor based on the fact that other feeding areas exist elsewhere. Additionally, drilling operations will not occur in the primary beluga feeding and calving habitat.

Taking into account the mitigation measures that are planned, effects on marine mammals are generally expected to be restricted to avoidance of a limited area around the drilling operation and short-term changes in behavior, falling within the MMPA definition of ''Level B harassment''. Animals are not expected to permanently abandon any area that is part of the drilling operations, and any behaviors that are interrupted during the activity are expected to resume once the activity ceases. Only a small portion of marine mammal habitat will be affected at any time, and other areas within Cook Inlet will be available for necessary biological functions. Based on the analysis contained herein of the likely effects of the specified activity on marine mammals and their habitat, and taking into consideration the implementation of the proposed monitoring and mitigation measures, NMFS preliminarily finds that the total marine mammal take from Buccaneer's proposed exploratory drilling program will have a negligible impact on the affected marine mammal species or stocks.

Small Numbers

The requested takes proposed to be authorized represent 0.45 percent of the Alaska resident stock and 0.91 percent of the Gulf of Alaska, Aleutian Island and Bering Sea stock of killer whales (1,123 residents and 552 transients), 0.02 percent of the Gulf of Alaska stock of approximately 25,987 harbor porpoises, 0.01 percent of the Alaska stock of approximately 83,400 Dall's porpoises, 0.16–0.25 percent of the Alaska stock of approximately 810–1,233 minke whales, and 0.01 percent of the eastern North Pacific stock of approximately 18,017 gray whales. The take request presented for harbor seals represent 0.22 percent of the Cook Inlet/Shelikof stock of approximately 29,175 animals. These take estimates represent the percentage of each species or stock that could be taken by Level B behavioral harassment if each animal is taken only once. The numbers of marine mammals taken are small relative to the affected species or stock sizes. In addition, the mitigation and monitoring measures (described previously in this document) proposed for inclusion in the IHA (if issued) are expected to reduce even further any potential disturbance

to marine mammals. NMFS preliminarily finds that small numbers of marine mammals will be taken relative to the populations of the affected species or stocks.

Impact on Availability of Affected Species for Taking for Subsistence Uses

Relevant Subsistence Uses

The subsistence harvest of marine mammals transcends the nutritional and economic values attributed to the animal and is an integral part of the cultural identity of the region's Alaska Native communities. Inedible parts of the whale provide Native artisans with materials for cultural handicrafts, and the hunting itself perpetuates Native traditions by transmitting traditional skills and knowledge to younger generations (NOAA, 2007).

The Cook Inlet beluga whale has traditionally been hunted by Alaska Natives for subsistence purposes. For several decades prior to the 1980s, the Native Village of Tyonek residents were the primary subsistence hunters of Cook Inlet beluga whales. During the 1980s and 1990s, Alaska Natives from villages in the western, northwestern, and North Slope regions of Alaska either moved to or visited the south central region and participated in the yearly subsistence harvest (Stanek, 1994). From 1994 to 1998, NMFS estimated 65 whales per year (range 21–123) were taken in this harvest, including those successfully taken for food and those struck and lost. NMFS has concluded that this number is high enough to account for the estimated 14 percent annual decline in the population during this time (Hobbs *et al.,* 2008). Actual mortality may have been higher, given the difficulty of estimating the number of whales struck and lost during the hunts. In 1999, a moratorium was enacted (Public Law 106–31) prohibiting the subsistence take of Cook Inlet beluga whales except through a cooperative agreement between NMFS and the affected Alaska Native organizations. Since the Cook Inlet beluga whale harvest was regulated in 1999 requiring cooperative agreements, five beluga whales have been struck and harvested. Those beluga whales were harvested in 2001 (one animal), 2002 (one animal), 2003 (one animal), and 2005 (two animals). The Native Village of Tyonek agreed not to hunt or request a hunt in 2007, when no co-management agreement was to be signed (NMFS, 2008a).

On October 15, 2008, NMFS published a final rule that established long-term harvest limits on the Cook Inlet beluga whales that may be taken by Alaska Natives for subsistence purposes (73 FR 60976). That rule prohibits harvest for a 5-year period (2008–2012), if the average abundance for the Cook Inlet beluga whales from the prior five years (2003–2007) is below 350 whales. The next 5-year period that could allow for a harvest (2013–2017), would require the previous five-year average (2008–2012) to be above 350 whales. The 2008 Cook Inlet Beluga Whale Subsistence Harvest Final Supplemental Environmental Impact Statement (NMFS, 2008a) authorizes how many beluga whales can be taken during a 5-year interval based on the 5-year population estimates and 10-year measure of the population growth rate. Based on the 2008–2012 5-year abundance estimates, no hunt occurred between 2008 and 2012 (NMFS, 2008a). The Cook Inlet Marine Mammal Council, which managed the Alaska Native Subsistence fishery with NMFS, was disbanded by a unanimous vote of the Tribes' representatives on June 20, 2012. At this time, no harvest is expected in 2013 or 2014. Residents of the Native Village of Tyonek are the primary subsistence users in Knik Arm area.

Data on the harvest of other marine mammals in Cook Inlet are lacking. Some data are available on the subsistence harvest of harbor seals, harbor porpoises, and killer whales in Alaska in the marine mammal stock assessments. However, these numbers are for the Gulf of Alaska including Cook Inlet, and they are not indicative of the harvest in Cook Inlet.

Some detailed information on the subsistence harvest of harbor seals is available from past studies conducted by the Alaska Department of Fish & Game (Wolfe *et al.,* 2009). In 2008, only 33 harbor seals were taken for harvest in the Upper Kenai-Cook Inlet area. In the same study, reports from hunters stated that harbor seal populations in the area were increasing (28.6%) or remaining stable (71.4%). The specific hunting regions identified were Anchorage, Homer, Kenai, and Tyonek, and hunting generally peaks in March, September, and November (Wolfe *et al.,* 2009).

Potential Impacts to Subsistence Uses

Section 101(a)(5)(D) also requires NMFS to determine that the authorization will not have an unmitigable adverse effect on the availability of marine mammal species or stocks for subsistence use. NMFS has defined ''unmitigable adverse impact'' in 50 CFR 216.103 as: An impact resulting from the specified activity: (1) That is likely to reduce the availability of the species to a level insufficient for a harvest to meet subsistence needs by: (i) Causing the marine mammals to abandon or avoid hunting areas; (ii) Directly displacing subsistence users; or (iii) Placing physical barriers between the marine mammals and the subsistence hunters; and (2) That cannot be sufficiently mitigated by other measures to increase the availability of marine mammals to allow subsistence needs to be met.

The primary concern is the disturbance of marine mammals through the introduction of anthropogenic sound into the marine environment during the proposed exploratory drilling operation. Marine mammals could be behaviorally harassed and either become more difficult to hunt or temporarily abandon traditional hunting grounds. If a large or very large oil spill occurred, it could impact subsistence species. However, as previously mentioned one is not anticipated to occur, and measures have been taken to prevent a large or very large oil spill. The proposed exploratory drilling program should not have any impacts to beluga harvests as none currently occur in Cook Inlet, and no takes of belugas are anticipated or proposed to be authorized. Additionally, subsistence harvests of other marine mammal species are limited in Cook Inlet.

Plan of Cooperation or Measures To Minimize Impacts to Subsistence Hunts

Regulations at 50 CFR 216.104(a)(12) require IHA applicants for activities that take place in Arctic waters to provide a Plan of Cooperation or information that identifies what measures have been taken and/or will be taken to minimize adverse effects on the availability of marine mammals for subsistence purposes. NMFS regulations define Arctic waters as waters above 60° N. latitude. The proposed mitigation measures described earlier in this document will reduce impacts to any hunts of harbor seals or other marine mammal species that may occur in Cook Inlet. These measures will ensure that marine mammals are available to subsistence hunters.

Unmitigable Adverse Impact Analysis and Preliminary Determination

The project will not have any effect on current beluga whale harvests because no beluga harvest will take place in 2014. Moreover, no take of belugas is anticipated or proposed to be authorized. Additionally, the proposed drilling area is not an important native subsistence site for other subsistence species of marine mammals. Also, because of the relatively small proportion of marine mammals utilizing Cook Inlet, the number harvested is

expected to be extremely low. Therefore, because the proposed program would result in only temporary disturbances, the drilling program would not impact the availability of these other marine mammal species for subsistence uses.

The timing and location of subsistence harvest of Cook Inlet harbor seals may coincide with Buccaneer's project, but because this subsistence hunt is conducted opportunistically and at such a low level (NMFS, 2013c), Buccaneer's program is not expected to have an impact on the subsistence use of harbor seals. Moreover, hunts are unlikely to occur in mid-channel waters of Cook Inlet where drilling associated activities would occur.

NMFS anticipates that any effects from Buccaneer's proposed exploratory drilling program on marine mammals, especially harbor seals and Cook Inlet beluga whales, which are or have been taken for subsistence uses, would be short-term, site specific, and limited to inconsequential changes in behavior. NMFS does not anticipate that the authorized taking of affected species or stocks will reduce the availability of the species to a level insufficient for a harvest to meet subsistence needs by: (1) Causing the marine mammals to abandon or avoid hunting areas; (2) directly displacing subsistence users; or (3) placing physical barriers between the marine mammals and the subsistence hunters; and that cannot be sufficiently mitigated by other measures to increase the availability of marine mammals to allow subsistence needs to be met. In the unlikely event of a major oil spill in Cook Inlet, there could be major impacts on the availability of marine mammals for subsistence uses. As discussed earlier in this document, the probability of a major oil spill occurring over the life of the project is low. Additionally, Buccaneer developed an ODPCP, which was reviewed by NMFS and approved by ADEC on August 29, 2012. Based on the description of the specified activity, the measures described to minimize adverse effects on the availability of marine mammals for subsistence purposes, and the proposed mitigation and monitoring measures, NMFS has preliminarily determined that there will not be an unmitgable adverse impact on marine mammal availability for subsistence uses from take incidental to Buccaneer's proposed activities.

Endangered Species Act (ESA)

Cook Inlet beluga whales are listed as endangered under the ESA. The U.S. Army Corps of Engineers consulted with NMFS on this proposed project pursuant to Section 7 of the ESA. On March 23, 2012, NMFS concluded that the proposed exploratory drilling program in upper Cook Inlet is not likely to adversely affect beluga whales or their critical habitat. On May 9, 2013, NMFS received a letter requesting reinitiation of consultation for Buccaneer's proposed operations due to modifications to the project plan of operations. On July 8, 2013, NMFS again concluded that Buccaneer's proposed exploratory drilling program in upper Cook Inlet is not likely to adversely affect beluga whales or their designated critical habitat. Mitigation measures laid out in the Section 7 Letters of Concurrence to ensure no take of beluga whales have been proposed for inclusion in any issued IHA. Therefore, NMFS' Office of Protected Resources does not intend to initiate formal consultation under Section 7 of the ESA.

National Environmental Policy Act (NEPA)

NMFS is currently conducting an analysis, pursuant to NEPA, to determine whether this proposed IHA may have a significant effect on the human environment. This analysis will be completed prior to the issuance or denial of this proposed IHA.

Proposed Authorization

As a result of these preliminary determinations, NMFS proposes to issue an IHA to Buccaneer for conducting an exploratory drilling program in upper Cook Inlet during the 2014 open water season, provided the previously mentioned mitigation, monitoring, and reporting requirements are incorporated. The proposed IHA language is provided next.

This section contains a draft of the IHA itself. The wording contained in this section is proposed for inclusion in the IHA (if issued).

1. This IHA is valid from date of issuance through October 31, 2014.

2. This IHA is valid only for activities associated with Buccaneer's upper Cook Inlet exploratory drilling program. The specific areas where Buccaneer's exploratory drilling operations will occur are described in the August 2013 IHA application and depicted in Figure 1 of the application.

3. Species Authorized and Level of Take

a. The incidental taking of marine mammals, by Level B harassment only, is limited to the following species in the waters of Cook Inlet:

i. Odontocetes: 5 harbor porpoise; 5 Dall's porpoise; and 5 killer whales.

ii. Mysticetes: 2 gray whales and 2 minke whales.

iii. Pinnipeds: 51 harbor seals.

iv. If any marine mammal species not listed in conditions 3(a)(i) through (iii) are encountered during exploratory drilling operations and are likely to be exposed to sound pressure levels (SPLs) greater than or equal to 160 dB re 1 μPa (rms) for impulse sources or greater than or equal to 120 dB re 1 μPa (rms), then the Holder of this IHA must shut-down the sound source to avoid take.

b. The taking by injury (Level A harassment) serious injury, or death of any of the species listed in condition 3(a) or the taking of any kind of any other species of marine mammal is prohibited and may result in the modification, suspension or revocation of this IHA.

4. The authorization for taking by harassment is limited to the following acoustic sources (or sources with comparable frequency and intensity) and from the following activities:

a. airgun array with a total discharge volume of 720 in^3;

b. continuous drill rig sounds during active drilling operations and from rig tow; and

c. impact hammer during conductor pipe driving.

5. The taking of any marine mammal in a manner prohibited under this Authorization must be reported immediately to the Chief, Permits and Conservation Division, Office of Protected Resources, NMFS or her designee.

6. The holder of this IHA must notify the Chief of the Permits and Conservation Division, Office of Protected Resources, at least 48 hours prior to the start of exploration drilling activities (unless constrained by the date of issuance of this Authorization in which case notification shall be made as soon as possible).

7. Mitigation and Monitoring Requirements: The Holder of this Authorization is required to implement the following mitigation and monitoring requirements when conducting the specified activities to achieve the least practicable impact on affected marine mammal species or stocks:

a. Utilize a sufficient number of NMFS-qualified, vessel-based Protected Species Observers (PSOs) to visually watch for and monitor marine mammals near the drill rig during daytime operations (from nautical twilight-dawn to nautical twilight-dusk) and before and during start-ups of sound sources day or night. PSOs shall have access to reticle binoculars, big-eye binoculars, and night vision devices. PSO shifts shall last no longer than 4 hours at a time. PSOs shall also make observations during daytime periods when the sound

sources are not operating for comparison of animal abundance and behavior, when feasible. When practicable, as an additional means of visual observation, drill rig or vessel crew may also assist in detecting marine mammals.

b. When a mammal sighting is made, the following information about the sighting will be recorded:

i. Species, group size, age/size/sex categories (if determinable), behavior when first sighted and after initial sighting, heading (if consistent), bearing and distance from the PSO, apparent reaction to activities (e.g., none, avoidance, approach, paralleling, etc.), closest point of approach, and behavioral pace;

ii. Time, location, speed, activity of the vessel, sea state, ice cover, visibility, and sun glare;

iii. The positions of other vessel(s) in the vicinity of the PSO location (if applicable);

iv. The rig's position, speed if under tow, and water depth, sea state, ice cover, visibility, and sun glare will also be recorded at the start and end of each observation watch, every 30 minutes during a watch, and whenever there is a change in any of those variables.

c. Within safe limits, the PSOs should be stationed where they have the best possible viewing;

d. PSOs should be instructed to identify animals as unknown where appropriate rather than strive to identify a species if there is significant uncertainty;

e. Conductor Pipe Driving Mitigation Measures:

i. PSOs will observe from the drill rig during impact hammering out to the 160 dB (rms) radius of 2 km (1.24 mi). If marine mammal species for which take is not authorized enter this zone, then use of the impact hammer will cease.

ii. If cetaceans for which take is authorized enter within the 180 dB (rms) radius of 250 m (820 ft) or if pinnipeds for which take is authorized enter within the 190 dB (rms) radius of 60 m (200 ft), then use of the impact hammer will cease. Following a shutdown of impact hammering activities, the applicable zones must be clear of marine mammals for at least 30 minutes prior to restarting activities.

iii. PSOs will visually monitor out to the 160 dB radius for at least 30 minutes prior to the initiation of activities. If no marine mammals are detected during that time, then Buccaneer can initiate impact hammering using a ''soft start'' technique. Hammering will begin with an initial set of three strikes at 40 percent energy followed by a 1 min waiting period, then two subsequent three-strike sets. This ''soft-start'' procedure will be implemented anytime impact hammering has ceased for 30 minutes or more. Impact hammer ''soft-start'' will not be required if the hammering downtime is for less than 30 minutes and visuals surveys are continued throughout the silent period and no marine mammals are observed in the applicable zones during that time.

f. VSP Airgun Mitigation Measures:

i. PSOs will observe from the drill rig during airgun operations out to the 160 dB radius of 2.5 km (1.55 mi). If marine mammal species for which take is not authorized enter this zone, then use of the airguns will cease.

ii. If cetaceans for which take is authorized enter within the 180 dB (rms) radius of 240 m (787 ft) or if pinnipeds for which take is authorized enter within the 190 dB (rms) radius of 75 m (246 ft), then use of the airguns will cease. Following a shutdown of airgun operations, the applicable zones must be clear of marine mammals for at least 30 minutes prior to restarting activities.

iii. PSOs will visually monitor out to the 160 dB radius for at least 30 minutes prior to the initiation of activities. If no marine mammals are detected during that time, then Buccaneer can initiate airgun operations using a ''ramp-up'' technique. Airgun operations will begin with the firing of a single airgun, which will be the smallest gun in the array in terms of energy output (dB) and volume (in^3). Operators will then continue ramp-up by gradually activating additional airguns over a period of at least 30 minutes (but not longer than 40 minutes) until the desired operating level of the airgun array is obtained. This ramp-up procedure will be implemented anytime airguns have not been fired for 30 minutes or more. Airgun ramp-up will not be required if the airguns have been off for less than 30 minutes and visuals surveys are continued throughout the silent period and no marine mammals are observed in the applicable zones during that time.

g. No initiation of survey operations involving the use of sound sources is permitted from a shutdown position at night or during low-light hours (such as in dense fog or heavy rain).

h. Field Source Verification: The Holder of this IHA is required to conduct sound source verification tests for the drill rig, impact hammer, and the airgun array. Sound source verification shall consist of distances where broadside and endfire directions at which broadband received levels reach 190, 180, 170, 160, and 120 dB re 1 μPa (rms) for all active acoustic sources that may be used during the activities. Initial results must be provided to NMFS within 1 week of completing the analysis.

i. Helicopters must maintain an altitude of at least 1,000 ft (305 m), except during takeoffs, landings, or emergency situations.

8. Reporting Requirements: The Holder of this IHA is required to:

a. Submit an SSV report that describes the source of the sound, the environment, the measurements, and the methodology employed to make the measurements. Results will be presented as overall sound pressure levels and displays of 1/3rd octave band sound levels. Preliminary findings relative to the 120 dB, 160 dB, 180 dB, and 190 dB isopleths will be provided within 1 week of SSV completion.

b. Submit a draft Technical Report on all activities and monitoring results to NMFS' Permits and Conservation Division within 90 days of expiration of the IHA. The Technical Report will include:

i. Summaries of monitoring effort (e.g., total hours, total distances, and marine mammal distribution through the study period, accounting for sea state and other factors affecting visibility and detectability of marine mammals);

ii. Analyses of the effects of various factors influencing detectability of marine mammals (e.g., sea state, number of observers, and fog/glare);

iii. Species composition, occurrence, and distribution of marine mammal sightings, including date, water depth, numbers, age/size/gender categories (if determinable), group sizes, and ice cover;

iv. Analyses of the effects of drilling operation activities;

v. Sighting rates of marine mammals during periods with and without drilling operation activities (and other variables that could affect detectability), such as: (A) Initial sighting distances versus activity state; (B) closest point of approach versus activity state; (C) observed behaviors and types of movements versus activity state; (D) numbers of sightings/individuals seen versus activity state; (E) distribution around the drill rig versus activity state; and (F) estimates of take by Level B harassment based on presence in the 120 dB and 160 dB harassment zones.

c. Submit a final report to the Chief, Permits and Conservation Division, Office of Protected Resources, NMFS, within 30 days after receiving comments from NMFS on the draft technical report. If NMFS has no comments on the draft technical report, the draft report shall be considered to be the final report.

9. a. In the unanticipated event that the specified activity clearly causes the take of a marine mammal in a manner prohibited by this IHA, such as an injury (Level A harassment), serious injury or mortality (e.g., ship-strike, gear interaction, and/or entanglement), Buccaneer shall immediately cease the specified activities and immediately report the incident to the Chief of the Permits and Conservation Division, Office of Protected Resources, NMFS, her designees, and the Alaska Regional Stranding Coordinators. The report must include the following information:

i. Time, date, and location (latitude/longitude) of the incident;

ii. The name and type of vessel involved;

iii. The vessel's speed during and leading up to the incident;

iv. Description of the incident;

v. Status of all sound source use in the 24 hours preceding the incident;

vi. Water depth;

vii. Environmental conditions (e.g., wind speed and direction, Beaufort sea state, cloud cover, and visibility);

viii. Description of marine mammal observations in the 24 hours preceding the incident;

ix. Species identification or description of the animal(s) involved;

x. The fate of the animal(s); and

xi. Photographs or video footage of the animal (if equipment is available).

Activities shall not resume until NMFS is able to review the circumstances of the prohibited take. NMFS shall work with Buccaneer to determine what is necessary to minimize the likelihood of further prohibited take and ensure MMPA compliance. Buccaneer may not resume their activities until notified by NMFS via letter or email, or telephone.

b. In the event that Buccaneer discovers an injured or dead marine mammal, and the lead PSO determines that the cause of the injury or death is unknown and the death is relatively recent (i.e., in less than a moderate state of decomposition as described in the next paragraph), Buccaneer will immediately report the incident to the Chief of the Permits and Conservation Division, Office of Protected Resources, NMFS, her designees, and the NMFS Alaska Stranding Hotline. The report must include the same information identified in the Condition 9(a) above. Activities may continue while NMFS reviews the circumstances of the incident. NMFS will work with Apache to determine whether modifications in the activities are appropriate.

c. In the event that Buccaneer discovers an injured or dead marine mammal, and the lead PSO determines that the injury or death is not associated with or related to the activities authorized in Condition 2 of this Authorization (e.g., previously wounded animal, carcass with moderate to advanced decomposition, or scavenger damage), Buccaneer shall report the incident to the Chief of the Permits and Conservation Division, Office of Protected Resources, NMFS, her designees, the NMFS Alaska Stranding Hotline (1–877–925–7773), and the Alaska Regional Stranding Coordinators within 24 hours of the discovery. Buccaneer shall provide photographs or video footage (if available) or other documentation of the stranded animal sighting to NMFS and the Marine Mammal Stranding Network. Activities may continue while NMFS reviews the circumstances of the incident.

10. Activities related to the monitoring described in this IHA do not require a separate scientific research permit issued under section 104 of the MMPA.

11. A copy of this Authorization must be in the possession of all contractors and PSOs operating under the authority of this IHA.

12. Penalties and Permit Sanctions: Any person who violates any provision of this IHA is subject to civil and criminal penalties, permit sanctions, and forfeiture as authorized under the MMPA.

13. This IHA may be modified, suspended or withdrawn if the Holder fails to abide by the conditions prescribed herein or if the authorized taking is having more than a negligible impact on the species or stock of affected marine mammals, or if there is an unmitigable adverse impact on the availability of such species or stocks for subsistence uses.

Request for Public Comments

NMFS requests comment on our analysis, the draft authorization, and any other aspect of the Notice of Proposed IHA for Buccaneer's proposed upper Cook Inlet exploratory drilling program. Please include with your comments any supporting data or literature citations to help inform our final decision on Buccaneer's request for an MMPA authorization.

Dated: March 31, 2014.

Perry F. Gayaldo,

Acting Deputy Director, Office of Protected Resources, National Marine Fisheries Service.

[FR Doc. 2014–07601 Filed 4–4–14; 8:45 am]

BILLING CODE 3510–22–P

FEDERAL REGISTER

Vol. 79 Monday,

No. 66 April 7, 2014

Part IV

The President

Executive Order 13664—Blocking Property of Certain Persons With Respect to South Sudan

Federal Register
Vol. 79, No. 66
Monday, April 7, 2014

Presidential Documents

Title 3—

The President

Executive Order 13664 of April 3, 2014

Blocking Property of Certain Persons With Respect to South Sudan

By the authority vested in me as President by the Constitution and the laws of the United States of America, including the International Emergency Economic Powers Act (50 U.S.C. 1701 *et seq.*) (IEEPA), the National Emergencies Act (50 U.S.C. 1601 *et seq.*) (NEA), section 212(f) of the Immigration and Nationality Act of 1952 (8 U.S.C. 1182(f)), and section 301 of title 3, United States Code,

I, BARACK OBAMA, President of the United States of America, find that the situation in and in relation to South Sudan, which has been marked by activities that threaten the peace, security, or stability of South Sudan and the surrounding region, including widespread violence and atrocities, human rights abuses, recruitment and use of child soldiers, attacks on peacekeepers, and obstruction of humanitarian operations, poses an unusual and extraordinary threat to the national security and foreign policy of the United States, and I hereby declare a national emergency to deal with that threat. I hereby order:

Section 1. (a) All property and interests in property that are in the United States, that hereafter come within the United States, or that are or hereafter come within the possession or control of any United States person (including any foreign branch) of the following persons are blocked and may not be transferred, paid, exported, withdrawn, or otherwise dealt in: any person determined by the Secretary of the Treasury, in consultation with the Secretary of State:

(i) to be responsible for or complicit in, or to have engaged in, directly or indirectly, any of the following in or in relation to South Sudan:

(A) actions or policies that threaten the peace, security, or stability of South Sudan;

(B) actions or policies that threaten transitional agreements or undermine democratic processes or institutions in South Sudan;

(C) actions or policies that have the purpose or effect of expanding or extending the conflict in South Sudan or obstructing reconciliation or peace talks or processes;

(D) the commission of human rights abuses against persons in South Sudan;

(E) the targeting of women, children, or any civilians through the commission of acts of violence (including killing, maiming, torture, or rape or other sexual violence), abduction, forced displacement, or attacks on schools, hospitals, religious sites, or locations where civilians are seeking refuge, or through conduct that would constitute a serious abuse or violation of human rights or a violation of international humanitarian law;

(F) the use or recruitment of children by armed groups or armed forces in the context of the conflict in South Sudan;

(G) the obstruction of the activities of international peacekeeping, diplomatic, or humanitarian missions in South Sudan, or of the delivery or distribution of, or access to, humanitarian assistance; or

(H) attacks against United Nations missions, international security presences, or other peacekeeping operations;

(ii) to be a leader of (A) an entity, including any government, rebel militia, or other group, that has, or whose members have, engaged in any of the activities described in subsection (a)(i) of this section or (B) an entity whose property and interests in property are blocked pursuant to this order;

(iii) to have materially assisted, sponsored, or provided financial, material, logistical, or technological support for, or goods or services in support of (A) any of the activities described in subsection (a)(i) of this section or (B) any person whose property and interests in property are blocked pursuant to this order; or

(iv) to be owned or controlled by, or to have acted or purported to act for or on behalf of, directly or indirectly, any person whose property and interests in property are blocked pursuant to this order.

(b) The prohibitions in subsection (a) of this section apply except to the extent provided in this order and by statutes, or in regulations, orders, directives, or licenses that may be issued pursuant to this order, and notwithstanding any contract entered into or any license or permit granted prior to the date of this order.

Sec. 2. I hereby determine that the making of donations of the type of articles specified in section 203(b)(2) of IEEPA (50 U.S.C. 1702(b)(2)) by, to, or for the benefit of any person whose property and interests in property are blocked pursuant to section 1 of this order would seriously impair my ability to deal with this national emergency, and I hereby prohibit such donations as provided by section 1 of this order.

Sec. 3. The prohibitions in section 1 of this order include but are not limited to:

(a) the making of any contribution or provision of funds, goods, or services by, to, or for the benefit of any person whose property and interests in property are blocked pursuant to this order; and

(b) the receipt of any contribution or provision of funds, goods, or services from any such person.

Sec. 4. I hereby find that the unrestricted immigrant and nonimmigrant entry into the United States of aliens determined to meet one or more of the criteria in section 1(a) of this order would be detrimental to the interests of the United States, and I hereby suspend entry into the United States, as immigrants or nonimmigrants, of such persons. Such persons shall be treated as persons covered by section 1 of Proclamation 8693 of July 24, 2011 (Suspension of Entry of Aliens Subject to United Nations Security Council Travel Bans and International Emergency Economic Powers Act Sanctions).

Sec. 5. (a) Any transaction that evades or avoids, has the purpose of evading or avoiding, causes a violation of, or attempts to violate any of the prohibitions set forth in this order is prohibited.

(b) Any conspiracy formed to violate any of the prohibitions set forth in this order is prohibited.

Sec. 6. For the purposes of this order:

(a) the term ''person'' means an individual or entity;

(b) the term ''entity'' means a partnership, association, trust, joint venture, corporation, group, subgroup, or other organization; and

(c) the term ''United States person'' means any United States citizen, permanent resident alien, entity organized under the laws of the United States or any jurisdiction within the United States (including foreign branches), or any person in the United States.

Sec. 7. For those persons whose property and interests in property are blocked pursuant to this order who might have a constitutional presence in the United States, I find that because of the ability to transfer funds or other assets instantaneously, prior notice to such persons of measures to be taken pursuant to this order would render those measures ineffectual.

I therefore determine that for these measures to be effective in addressing this national emergency, there need be no prior notice of a listing or determination made pursuant to section 1 of this order.

Sec. 8. The Secretary of the Treasury, in consultation with the Secretary of State, is hereby authorized to take such actions, including the promulgation of rules and regulations, and to employ all powers granted to the President by IEEPA as may be necessary to carry out the purposes of this order. The Secretary of the Treasury may redelegate any of these functions to other officers and agencies of the United States Government consistent with applicable law. All agencies of the United States Government are hereby directed to take all appropriate measures within their authority to carry out the provisions of this order.

Sec. 9. The Secretary of the Treasury, in consultation with the Secretary of State, is hereby authorized to submit the recurring and final reports to the Congress on the national emergency declared in the order, consistent with section 401(c) of the NEA (50 U.S.C. 1641(c)) and section 204(c) of IEEPA (50 U.S.C. 1703(c)).

Sec. 10. This order is not intended to, and does not, create any right or benefit, substantive or procedural, enforceable at law or in equity by any party against the United States, its departments, agencies, or entities, its officers, employees, or agents, or any other person.

THE WHITE HOUSE,
April 3, 2014.

[FR Doc. 2014–07895
Filed 4–4–14; 11:15 am]
Billing code 3295–F4

Reader Aids

Federal Register

Vol. 79, No. 66

Monday, April 7, 2014

CUSTOMER SERVICE AND INFORMATION

Federal Register/Code of Federal Regulations	
General Information, indexes and other finding aids	**202–741–6000**
Laws	**741–6000**
Presidential Documents	
Executive orders and proclamations	**741–6000**
The United States Government Manual	**741–6000**
Other Services	
Electronic and on-line services (voice)	**741–6020**
Privacy Act Compilation	**741–6064**
Public Laws Update Service (numbers, dates, etc.)	**741–6043**
TTY for the deaf-and-hard-of-hearing	**741–6086**

ELECTRONIC RESEARCH

World Wide Web

Full text of the daily Federal Register, CFR and other publications is located at: **www.fdsys.gov.**

Federal Register information and research tools, including Public Inspection List, indexes, and Code of Federal Regulations are located at: **www.ofr.gov.**

E-mail

FEDREGTOC-L (Federal Register Table of Contents LISTSERV) is an open e-mail service that provides subscribers with a digital form of the Federal Register Table of Contents. The digital form of the Federal Register Table of Contents includes HTML and PDF links to the full text of each document.

To join or leave, go to **http://listserv.access.gpo.gov** and select *Online mailing list archives, FEDREGTOC-L, Join or leave the list (or change settings);* then follow the instructions.

PENS (Public Law Electronic Notification Service) is an e-mail service that notifies subscribers of recently enacted laws.

To subscribe, go to **http://listserv.gsa.gov/archives/publaws-l.html** and select *Join or leave the list (or change settings);* then follow the instructions.

FEDREGTOC-L and **PENS** are mailing lists only. We cannot respond to specific inquiries.

Reference questions. Send questions and comments about the Federal Register system to: **fedreg.info@nara.gov**

The Federal Register staff cannot interpret specific documents or regulations.

Reminders. Effective January 1, 2009, the Reminders, including Rules Going Into Effect and Comments Due Next Week, no longer appear in the Reader Aids section of the Federal Register. This information can be found online at **http://www.regulations.gov.**

CFR Checklist. Effective January 1, 2009, the CFR Checklist no longer appears in the Federal Register. This information can be found online at **http://bookstore.gpo.gov/.**

FEDERAL REGISTER PAGES AND DATE, APRIL

18153–18440 1
18441–18610 2
18611–18764 3
18765–18984 4
18985–19286 7

CFR PARTS AFFECTED DURING APRIL

At the end of each month the Office of the Federal Register publishes separately a List of CFR Sections Affected (LSA), which lists parts and sections affected by documents published since the revision date of each title.

3 CFR

Proclamations:
9092 18763
9093 18975
9094 18977
9095 18979
9096 18981
9097 18983
9098 18985

Executive Orders:
13664 19283

5 CFR

Proposed Rules:
1201 18658

6 CFR

5 18441

7 CFR

33 18765
1214 18987

Proposed Rules:
28 18211
987 19028
1703 18482
1709 18482
1710 18482
1717 18482
1720 18482
1721 18482
1724 18482
1726 18482
1737 18482
1738 18482
1739 18482
1740 18482
1753 18482
1774 18482
1775 18482
1779 18482
1780 18482
1781 18482
1782 18482
1924 18482
1940 18482
1942 18482
1944 18482
1948 18482
1951 18482
1955 18482
1962 18482
1970 18482
1980 18482
3550 18482
3560 18482
3565 18482
3570 18482
3575 18482
4274 18482
4279 18482
4280 18482
4284 18482
4290 18482

10 CFR

Proposed Rules:
430 18661

14 CFR

39 ..... 18611, 18615, 18617, 18619, 18622, 18626, 18629, 18987
71 ..... 18153, 18154, 18155, 18442
1201 18443

Proposed Rules:
39 ..... 18846, 18848
71 ..... 18482, 19030
121 18212

16 CFR

303 18766

Proposed Rules:
306 18850

17 CFR

Proposed Rules:
200 18483
229 18483
230 18483
232 18483
239 18483
240 18483
243 18483
249 18483

18 CFR

35 18775

Proposed Rules:
284 18223

21 CFR

1 18799
510 18156
516 18156
520 18156
522 18156
526 18156
556 18990
558 ..... 18156, 18990

Proposed Rules:
1 ..... 18866, 18867

26 CFR

1 ..... 18159, 18161
602 18161

29 CFR

1985 18630

Proposed Rules:
4001 18483
4022 18483
4044 18483

30 CFR

723 18444
724 18444
845 18444
846 18444

31 CFR

560 18990

32 CFR

156 18161

33 CFR

100 ..... 18167, 18169, 18448, 18995
117 ..... 18181, 18996
165 18169
334 18450

Proposed Rules:

117 18243
165 ..... 18245, 19031, 19034

34 CFR

Proposed Rules:

Ch. III 18490

39 CFR

Proposed Rules:

3050 18661

40 CFR

51 18452
52 ..... 18183, 18453, 18644, 18802, 18997, 18999, 19001, 19009, 19012
60 18952
180 ..... 18456, 18461, 18467, 18805, 18810, 18815, 18818
761 18471
799 18822

Proposed Rules:

52 ..... 18248, 18868, 19036
81 18248
131 18494
300 19037
761 18497

41 CFR

102 18477
103 18477
104 18477
105 18477
106 18477
107 18477
108 18477
109 18477
110 18477
111 18477
112 18477
113 18477
114 18477
115 18477
116 18477
117 18477
118 18477
119 18477
120 18477
121 18477
122 18477
123 18477
124 18477
125 18477
126 18477
127 18477
128 18477
129 18477
130 18477
131 18477
132 18477
133 18477
134 18477
135 18477
136 18477
137 18477
138 18477
139 18477
140 18477
141 18477
142 18477

44 CFR

64 18825

47 CFR

73 19014

Proposed Rules:

1 18249
36 18498
80 18249
95 18249

48 CFR

246 18654

Proposed Rules:

1 18503
3 18503
12 18503
52 18503
915 18416
934 18416
942 18416
944 18416
945 18416
952 18416
1516 19039
1552 19039

49 CFR

571 19178

Proposed Rules:

Ch. X 19042

50 CFR

17 18190
25 18478
32 18478
300 18827
648 ..... 18478, 18834, 18844
679 ..... 18654, 18655, 18845
697 19015

Proposed Rules:

17 18869
635 18870
660 18876

LIST OF PUBLIC LAWS

This is a continuing list of public bills from the current session of Congress which have become Federal laws. This list is also available online at *http://www.archives.gov/federal-register/laws*.

The text of laws is not published in the **Federal Register** but may be ordered in "slip law" (individual pamphlet) form from the Superintendent of Documents, U.S. Government Printing Office, Washington, DC 20402 (phone, 202–512–1808). The text will also be made available on the Internet from GPO's Federal Digital System (FDsys) at *http://www.gpo.gov/fdsys*. Some laws may not yet be available.

H.R. 2019/P.L. 113–94
Gabriella Miller Kids First Research Act (Apr. 3, 2014; 128 Stat. 1085)

H.R. 4152/P.L. 113–95
Support for the Sovereignty, Integrity, Democracy, and Economic Stability of Ukraine Act of 2014 (Apr. 3, 2014; 128 Stat. 1088)

S. 2183/P.L. 113–96
United States international programming to Ukraine and neighboring regions. (Apr. 3, 2014; 128 Stat. 1098)

Last List April 3, 2014

Public Laws Electronic Notification Service (PENS)

PENS is a free electronic mail notification service of newly enacted public laws. To subscribe, go to *http://listserv.gsa.gov/archives/publaws-l.html*

Note: This service is strictly for E-mail notification of new laws. The text of laws is not available through this service. **PENS** cannot respond to specific inquiries sent to this address.