AUTHENTICATED
U.S. GOVERNMENT
INFORMATION
GPO

FEDERAL REGISTER

Vol. 79 Monday,
No. 66 April 7, 2014

Part II

Department of Transportation

National Highway Traffic Safety Administration

49 CFR Part 571

Federal Motor Vehicle Safety Standards; Rear Visibility; Final Rule

DEPARTMENT OF TRANSPORTATION

National Highway Traffic Safety Administration

49 CFR Part 571

[Docket No. NHTSA–2010–0162]

RIN 2127–AK43

Federal Motor Vehicle Safety Standards; Rear Visibility

AGENCY: National Highway Traffic Safety Administration (NHTSA), Department of Transportation (DOT).

ACTION: Final rule.

SUMMARY: To reduce the risk of devastating backover crashes involving vulnerable populations (including very young children) and to satisfy the mandate of the Cameron Gulbransen Kids Transportation Safety Act of 2007, NHTSA is issuing this final rule to expand the required field of view for all passenger cars, trucks, multipurpose passenger vehicles, buses, and low-speed vehicles with a gross vehicle weight of less than 10,000 pounds. The agency anticipates that today's final rule will significantly reduce backover crashes involving children, persons with disabilities, the elderly, and other pedestrians who currently have the highest risk associated with backover crashes. Specifically, today's final rule specifies an area behind the vehicle which must be visible to the driver when the vehicle is placed into reverse and other related performance requirements. The agency anticipates that, in the near term, vehicle manufacturers will use rearview video systems and in-vehicle visual displays to meet the requirements of this final rule.

DATES: *Effective Date:* This rule is effective June 6, 2014.

Compliance Date: Compliance is required, in accordance with the phase-in schedule, beginning on May 1, 2016. Full compliance is required on May 1, 2018.

Petitions for reconsideration: Petitions for reconsideration of this final rule must be received not later than May 22, 2014.

Incorporation by Reference: The incorporation by reference of certain publications listed in the standard is approved by the Director of the Federal Register as of June 6, 2014.

ADDRESSES: Petitions for reconsideration of this final rule must refer to the docket and notice number set forth above and be submitted to the Administrator, National Highway Traffic Safety Administration, 1200 New Jersey Avenue SE., Washington, DC 20590.

FOR FURTHER INFORMATION CONTACT:
For technical issues: Mr. Markus Price, Office of Vehicle Rulemaking, Telephone: 202–366–0098, Facsimile: 202–366–7002, NVS–121.
For legal issues: Mr. Jesse Chang, Office of the Chief Counsel, Telephone: 202–366–2992, Facsimile: 202–366–3820, NCC–112.
The mailing address for these officials is: National Highway Traffic Safety Administration, 1200 New Jersey Avenue SE., Washington, DC 20590.

SUPPLEMENTARY INFORMATION:

Table of Contents

I. Executive Summary
II. Background and Notice of Proposed Rulemaking
a. Cameron Gulbransen Kids Transportation Safety Act and National Traffic and Motor Vehicle Safety Act
b. Safety Problem
c. Advance Notice of Proposed Rulemaking
d. Notice of Proposed Rulemaking
e. Summary of Comments on the NPRM
f. Public Hearing and Workshop
g. Additional 2012 Research
h. Additional SCI Case Analysis
i. Updates to NCAP
III. Final Rule and Response to Comments
a. Summary of the Final Rule
b. Applicability
c. Alternative Countermeasures
d. Field of View
e. Image Size
f. Test Procedure
g. Linger Time, Deactivation, and Backing Event
h. Image Response Time
i. Display Luminance
j. Durability Testing
k. Phase-In
l. Remaining Issues
m. Effective Date
IV. Estimated Costs and Benefits
a. System Effectiveness
b. Benefits
c. Costs
d. Market Adoption Rate
e. Net Impact
f. Cost Effectiveness and Regulatory Alternatives
V. Regulatory Analyses
VI. Regulatory Text

I. Executive Summary

The Cameron Gulbransen Kids Transportation Safety Act of 2007 (''K.T. Safety Act'' or ''the Act'') directs this agency to amend Federal Motor Vehicle Safety Standard (FMVSS) No. 111 [1] ''to expand the required field of view to enable the driver of a motor vehicle to detect areas behind the motor vehicle to reduce death and injury resulting from backing incidents, particularly incidents involving small children and disabled persons.'' [2] In other words, the K.T. Safety Act requires that this agency conduct a rulemaking to amend FMVSS No. 111 in a manner so as to address a safety risk identified by Congress in the Act—namely, the risk of death and injury that can result from backover crashes. Further, the language chosen by Congress particularly directs the agency to consider crashes involving children and persons with disabilities.

With some variations, the requirements in today's final rule generally adopt the requirements proposed in the NPRM that expand the required field of view in FMVSS No. 111 to include a 10-foot by 20-foot zone directly behind the vehicle.[3] Today's final rule applies these requirements to all passenger vehicles, trucks, buses, and low-speed vehicles [4], with a gross vehicle weight rating (GVWR) of 10,000 pounds or less. Given the currently available information regarding the backover safety risk, the available backing aid technologies, etc., the agency believes that systems fulfilling the requirements adopted by today's final rule are the most effective and the most cost-effective systems available for meeting the safety need specified in the K.T. Safety Act. We believe that the systems meeting the requirements of today's rule also afford the best protection to children and persons with disabilities.

[1] FMVSS No. 111, currently titled ''Rearview mirrors'' is renamed by today's final rule as ''Rear visibility.''

[2] Cameron Gulbransen Kids Transportation Safety Act of 2007, (Public Law 110–189, 122 Stat. 639–642), § 4 (2007).

[3] Prior to adoption of today's rule, the required field of view for passenger vehicles specified that these vehicles have an inside rearview mirror that provides a view from 61 meters behind the vehicle to the horizon. Multipurpose passenger vehicles, trucks and buses with a GVRW of 4,536 kg or less may certify to the passenger car requirements or provide large planar outside mirrors on both the driver's side as well as the passenger's side that provide a view to the rear along the sides of the vehicle. Passenger cars are required to have a planar outside mirror on the driver's side that provides a view to the rear along the side of the vehicle. This rule does not change these field of view requirements from FMVSS No. 111, but adds additional requirements.

[4] A low-speed vehicle is defined as a 4-wheeled vehicle, with a GVWR of less than 3000 lbs, and whose speed attainable in 1 mile on a paved level surface is greater than 20 mph and no greater than 25 mph. *See* 49 CFR Part 571.3. Like all other vehicle types covered under today's final rule, LSVs are required to provide the driver with a rearview image meeting the requirements specified in the regulatory text at the end of this document regardless of whether the vehicle has any significant blind zone. However, like other manufacturers, low-speed vehicle manufacturers can petition NHTSA for an exemption or for rulemaking. The issue of how today's final rule applies to LSVs is discussed in further detail in Section III. b. Applicability, below.

Available Information Continues to Show that the NPRM Approach is the Best Approach

After the proposed rule, the agency received public comments through two separate comment periods and two public meetings. Further, the agency conducted additional research to ensure that the analysis supporting today's final rule is robust. While a significant amount of information has been obtained since the NPRM, none of the additional information supports the agency departing from the general approach proposed in the NPRM. The additional information is useful because it enables the agency to refine its understanding of the technical capabilities of the manufacturers to meet the requirements of today's rule and the relevant costs/benefits of today's rule. Nonetheless, among the various types of rear visibility systems available for study, agency testing and other currently available information support the following claims:

(1) Drivers using rear visibility systems meeting the field of view requirements of today's final rule avoid crashes with an unexpected test object at a statistically significant higher rate than drivers using the standard complement of vehicle equipment.

(2) Such systems (e.g., rearview video systems) consistently outperform other rear visibility systems (e.g., sensors-only or mirror systems) due to a variety of technical and driver-use limitations in those other systems.

(3) Rear visibility systems meeting the requirements of today's rule are the only systems that can meet the need for safety specified by Congress in the K.T. Safety Act (the backover crash risk) because the other systems afford little or no measureable safety benefit.

(4) Systems meeting the requirements of today's final rule are not only the most effective system at addressing the backover crash risk but also the most cost-effective.

Thus, NHTSA's believes that the rear visibility system requirements in today's final rule (expanding the required field of view to include the 20-foot by 10-foot zone immediately behind the vehicle) are the only method for addressing the backover safety risk identified in the K.T. Safety Act that is rationally supported by the totality of the available data.

Recent Market Developments Have Substantially Reduced Costs

The agency's latest analysis has shown that 73% of vehicles covered under today's final rule will be sold with rearview video systems by 2018. This new development in the market means that today's rule will require less change to the market than we had previously anticipated. Assuming the 73% market adoption rate, it would cost $546 to $620 million to equip the remaining 27% of vehicles in 2018 without a rear visibility system. Those systems would also produce $265 to $396 million in monetized benefits.

While we have data to demonstrate what we predict will be the state of the market in 2018, we are unable to determine with any reasonable certainty the precise extent to which other potential events (e.g., the K.T. Safety Act and the rulemaking process) beyond ''pure market forces'' might also be a factor. However, in order to reflect this uncertainty in estimating the likely benefits and costs, NHTSA considered different methods for establishing a baseline market adoption rate of rear visibility systems. The purpose of this analysis was to capture, in addition to the effects of issuing this final rule, the potential effects of the K.T. Safety Act (and the rulemaking process mandated by the Act) upon the rearview video system market adoption. While assessing different alternative baselines is useful in estimating these different market scenarios, all of these analyses continue to show that the approach adopted in today's final rule is the best approach for addressing the backover safety problem.

Accordingly, we have developed an analysis that presents a range of both the benefits and costs of this rule based on a range of adoption rates. At the top-end of the range of adoption rates is the assumption that all current and projected installations are due purely to market forces, meaning that 73% of the new vehicle fleet will be equipped with rearview video systems by 2018. At the low-end of the range of adoption rates, we adopt the assumption that half of the increase in the market adoption trend as a result of the data from MY2014 is attributable to ''pure market forces'' and half is not.[5] Assuming these top and low end estimated adoption trends, the market adoption attributable to ''pure market demand'' in 2018 would be between 59% and 73%. Assuming this range of market adoption, $546 million to $924 million in costs and $265 million to $595 million in monetized benefits are attributable to the final rule, the rulemaking process, and the K.T. Safety Act.

TABLE 1—ESTIMATED COSTS AND BENEFITS UNDER 59% AND 73% MARKET ADOPTION SCENARIOS

	73% Adoption	59% Adoption
Annual Benefits (2010 $)	$265 M to $396 M	$398 M to $595 M
Annual Costs (2010 $)	$546 M to $620 M	$827 M to $924 M

As described in detail, below, and in the Final Regulatory Impact Analysis (FRIA), the agency believes that the top-end assumption is both more likely than the low end (given the strong market incentives in providing rearview video systems) and presents a better picture of the results of issuing today's final rule. Accordingly, for ease of presentation, the discussions of the costs and benefits presented both in this preamble and the FRIA present only those numbers associated with this assumption. However, the agency does present detailed information concerning the costs and benefits of the low-end assumption in Section IV. D. of this preamble and (in more detail) Chapter VIII. D. of the FRIA.

Benefits Are Expected To Be Substantial

This rule is expected to decrease the risks to children, persons with disabilities, and other pedestrians from being injured or killed in a backover crash. Backover crashes are specifically defined as crashes where non-occupants of vehicles (such as pedestrians or cyclists) are struck by vehicles moving in reverse. Our assessment of available safety data indicates that (on average) there are 267 fatalities and 15,000 injuries (6,000 of which are incapacitating[6]) resulting from backover

[5] Further information about these alternative baselines is available in the Final Regulatory Impact Analysis accompanying this document in the docket referenced at the beginning of this document.

[6] The Manual on Classification of Motor Vehicle Traffic Accidents (ANSI D16.1) defines ''incapacitating injury'' as ''any injury, other than

Continued

crashes every year. Of those, 210 fatalities and 15,000 injuries [7] are attributable to backover crashes involving light vehicles (passenger cars, multipurpose passenger vehicles (MPVs), trucks, buses, and low-speed vehicles) with a GVWR of 10,000 pounds or less. Further, the agency has found that children and elderly adults are disproportionately affected by backover crashes. Our data indicate that children under 5 years old account for 31 percent of the fatalities each year, and adults 70 years of age and older account for 26 percent.

Rear visibility systems meeting the requirements of today's final rule are predicted to have an effectiveness of between 28 and 33 percent—substantially higher than other systems (e.g., sensor-only systems) that are currently available. Applying that estimated effectiveness to the latest information on the target population, the aforementioned systems are expected to save 58 to 69 lives each year (not including injuries prevented) once the entire on road vehicle fleet is equipped with systems meeting today's rules requirements (anticipated by approximately 2054).[8] However, because our latest information indicates that as much as 73% of new vehicles sold will have rearview video systems by 2018, the lives saved and injuries prevented by equipping the remaining 27% of vehicles are approximately a quarter of this total. Thus, we believe that there will still be 13–15 fatalities and 1,125–1,332 injuries prevented annually that are a result of equipping the remaining 27% of vehicles that we do not anticipate will have rear visibility systems by 2018.[9] While our estimated annual benefits, beginning in model year 2018, will not be fully realized until 2054, they will increase over time from the phase-in date as vehicles with these systems continue to make up an increasing percentage of the overall vehicle fleet. Taking into account that a larger portion of miles traveled by a given model year is achieved early in the overall life of that model year, we estimate that roughly two thirds of the lifetime benefits for MY2018 will be realized by 2028.

TABLE 2—ESTIMATED ANNUAL QUANTIFIABLE BENEFITS

Benefits	
Fatalities Reduced	13 to 15.
Injuries Reduced	1,125 to 1,332.

In addition to the fatalities and injuries prevented, systems meeting today's final rule are expected to yield benefits over the lifetime of the vehicle as a result of avoiding property damage. While damage to rear visibility systems are a potential source of additional repair cost as a result of rear-end collisions, the agency calculates that these costs will be offset by the benefits realized by vehicle owners as a result of avoiding property-damage-only backing collisions and yield a net benefit [10] between $10 and $13 per vehicle (over the lifetime of the vehicle). In monetary terms, the benefits that are a result from issuing today's final rule (i.e., not counting the systems already being installed by the automakers) are expected to be between $265 and $396 million annually when considering both fatalities/injuries prevented and the property-damage-only collisions avoided.

As the agency is conscious of the costs of today's rule and the costs of rear visibility systems in general, the agency has made every effort to ensure that the benefits of today's rule are as accurately estimated as possible. Thus, various new pieces of information have been incorporated into the analysis in today's final rule that lead to different benefits estimates from those in the NPRM. The major differences include a more refined target population estimate, updated voluntary installation rate information, and more refined system effectiveness estimates. As explained further in this document, additional data from our crash databases [11] enabled the agency to more accurately estimate the size of the target population by sampling a greater number of years of data. Further, new data regarding the rate of adoption of rear visibility systems has enabled the agency to project the rate of adoption through the first full compliance year in today's rule. Finally, the agency was able to conduct additional research since the NPRM to further examine driver use of rear visibility systems by examining a wider range of driver demographics and an additional vehicle type. The additional research adds to the robustness of the agency's analysis of rear visibility system effectiveness through a larger sampling of research participants. While none of the aforementioned new information creates a rational basis for the agency to alter its decision from the NPRM in any significant fashion, the agency believes that it was prudent to ensure that the benefits of today's rule are estimated as accurately as possible due to the costs of this rulemaking required under the K.T. Safety Act. The available information continues to show that rear visibility systems meeting the requirements of this rule are the most effective (and the most cost-effective) systems at addressing the backover safety problem.

Further, the agency notes that there continue to be substantial benefits of this rule that are not easily quantifiable in monetary terms. The agency recognizes that victims of backover crashes are frequently the most vulnerable members of our society (such as young children, the elderly, or persons with disabilities). As these persons often have special mobility needs or are too young to adequately comprehend danger, it seems unlikely that solutions such as increased public awareness or audible backing warnings will be sufficient to prevent the safety risk of backover crashes. Further, the agency recognizes that most people place a high value on the lives of

a fatal injury, which prevents the injured person from walking, driving or normally continuing the activities the person was capable of performing before the injury occurred'' (Section 2.3.4)

[7] Due to rounding, injuries for light vehicles and all vehicles are estimated to be 15,000.

[8] Like all new safety standards, benefits realized from these systems will rise steadily in proportion to the increase of new vehicles meeting the requirements adopted today within the vehicle fleet operating on the public roads. In other words, as new vehicles meeting the new standard replace older vehicles, more vehicles operating on the road will have the new safety countermeasure and more benefits will be realized. As with all standards, it takes time to replace the whole vehicle fleet. While the full rate of annual anticipated benefits will likely not be realized until 2054, the rate of annual benefits will rise each year commensurate with new vehicle sales and the proportion of the miles traveled in those new vehicles.

[9] This figure shows the incremental lives saved and injuries prevented by equipping the remaining 27% of vehicles that are not projected to have rear visibility systems in 2018. It compares what the data show will be the market position for adoption of rearview video systems by 2018 and the 100% compliance requirement in 2018 (established by today's final rule). Because this figure measures what we project the market would (in fact) be in 2018, it does not account for any potential market adoption that is attributable to manufacturers responding to events that are unrelated to ''pure market forces'' (e.g., the passage of the K.T. Safety Act or this rulemaking process). As further explained below, there are a number of reasons why it is especially difficult in the case of this rule to quantify the market adoption that is attributable to the K.T. Safety Act or this rulemaking process. However, we acknowledge that these events may have had an effect on the market adoption of rearview video systems and we have attempted to capture this potential effect below in section IV. *Estimated Costs and Benefits.*

[10] This ''net benefit'' is a comparison between the cost of repairing/replacing damaged rear visibility systems and the benefit of avoiding property damage-only crashes. The costs of the rear visibility system and other benefits of these systems are not taken into account in this ''net benefit.''

[11] The updates that we have incorporated into our analysis include updates to the Fatality Analysis Reporting System (FARS), the National Automotive Sampling System General Estimates System (NASS–GES), and the Not-in-Traffic Surveillance (NiTS) system.

children and that there is a general consensus regarding the need to protect children as they are unable to protect themselves. As backover crash victims are often struck by their immediate family members or caretakers, it is the Department's opinion that an exceptionally high emotional cost, not easily convertible to monetary equivalents, is often inflicted upon the families of backover crash victims.

Costs of Today's Final Rule

The agency acknowledges that the costs of today's rule are significant. We anticipate rear visibility systems will cost approximately $43 to $45 for vehicles already equipped with a suitable visual display and between $132 and $142 for all other vehicles. Accordingly, based on an annual new vehicle fleet of 16.0 million vehicles and considering the number of vehicles we anticipate will already have rear visibility systems by 2018, we believe the costs attributable to equipping the remaining 27% of vehicles (that are not projected to have rear visibility systems in 2018) will range from $546 to $620 million annually.[12]

TABLE 3—ESTIMATED INSTALLATION COSTS

Costs (2010 $)	
Full system installation per vehicle.	$132 to $142.
Camera-only installation per vehicle.	$43 to $45.
Total Fleet	$546 M to $620 M.

In addition to taking steps to ensure that the benefits of today's rule are accurately estimated, the agency also took steps to ensure that the estimated costs of this rule are accurate. Most importantly, two pieces of additional information have enabled the agency to arrive at a more refined estimate of the costs of today's rule that differ from the NPRM. First, the agency has a more robust estimate of the per unit costs of rear visibility systems meeting the requirements of today's rule because the agency performed a tear down study that analyzed the ''bolt-by-bolt'' costs of rear visibility systems and the agency incorporated an analysis of the production savings that occur over time due to efficiencies in the manufacturing process and increases in volume. Second, the aforementioned updated adoption rate of rear visibility systems has been incorporated not only in our analysis of the benefits but also of the costs of today's rule. Based on the aforementioned revised estimates for costs and benefits, the net cost per equivalent life saved for rear visibility systems meeting the requirements of today's final rule ranges from $15.9 to $26.3 million.

TABLE 4—ESTIMATED COST EFFECTIVENESS

Cost per Equivalent Life Saved	
Rearview Video Systems.	$15.9 to $26.3 million*.

*The range presented is from a 3% to 7% discount rate.

TABLE 5—SUMMARY OF BENEFITS AND COSTS PASSENGER CARS AND LIGHT TRUCKS (MILLIONS 2010$) MY2018 AND THEREAFTER[13]

Benefits	Primary estimate	Low estimate	High estimate	Discount rate (%)
Lifetime Monetized	$265	$305	$305	7
Lifetime Monetized	$344	$396	$396	3
Costs:				
Lifetime Monetized	$546	$620	$557	7
Lifetime Monetized	$546	$620	$557	3
Net Impact:				
Lifetime Monetized	−$281	−$315	−$252	7
Lifetime Monetized	−$202	−$224	−$161	3

This Rule is the Least Costly Rule that Meets the Requirements of the K.T. Safety Act

Throughout this rulemaking process, the agency has been sensitive to the costs of today's rule and has sought to ensure that the requirements adopted impose the least amount of regulatory burden on the economy while still achieving Congress' goal of reducing fatalities and injuries resulting from backover crashes. Thus, through the information received by the agency through the comment periods and public workshops, the agency has explored and adopted various methods in order to avoid imposing unnecessary regulatory burdens on the industry and to afford as much flexibility as possible.

Phase-in Schedule

To that end, today's final rule establishes a flexible phase-in schedule that affords the manufacturers the maximum amount of time permitted by the K.T. Safety Act to achieve full compliance (48 months after the publication of this rule). The phase-in schedule established by today's rule, excluding small volume and multi-stage manufacturers, is as follows:

- 0% of the vehicles manufactured before May 1, 2016;
- 10% of the vehicles manufactured on or after May 1, 2016, and before May 1, 2017;
- 40% of the vehicles manufactured on or after May 1, 2017, and before May 1, 2018; and
- 100% of the vehicles manufactured on or after May 1, 2018.[14]

[12] We note that the costs to low-speed vehicles are a small portion (less than 1%) of the vehicle fleet sales each year. We have assumed that the costs to low-speed vehicles to comply with the requirements of today's final rule are the same as other vehicles and taken those costs into account in this estimate.

[13] The different estimates in this chart show some of the different potential technology options. The Primary Estimate is the lowest installation cost option (which assumes manufacturers will use a 130° camera and will utilize any existing display units already offered in their vehicles). The Low Estimate and High Estimate provide the estimated *minimum and maximum net impacts* possible. The Low Estimate is the 180° camera and assumes that manufacturers will install a new display to meet the requirements of today's rule. It represents the minimum overall benefit estimate as it has the largest negative net impact. Conversely, the High Estimate is the 180° camera and assumes that manufacturers that currently offer vehicles with display units are able and choose to use those existing display units to meet the requirements of today's rule. This represents the maximum overall benefit estimate because it has the smallest negative net impact.

[14] As further discussed below, the latest data show that the adoption rate of rearview video systems has increased significantly in recent years. As a result, we anticipate that many manufacturers will be able to meet the phase-in schedule with little adjustment to their current manufacturing plans.

In addition to affording manufacturers the maximum amount of time permitted under the K.T. Safety Act to achieve full compliance, the agency adopts the back-loaded phase-in schedule proposed in the NPRM and does not separately evaluate light trucks and passenger cars for the purposes of the phase-in in order to further increase flexibility.

Further, the agency learned from the comments that, while the rearview video systems currently used by manufacturers are able to meet most of the requirements established in today's rule, they may not meet the entire set of requirements beyond the field of view requirements including the image size, linger time, response time, durability, and deactivation requirements. While the agency continues to believe that those requirements are essential in ensuring the quality of rear visibility systems in the long run, today's final rule does not require that manufacturers comply with the requirements beyond the field of view for purposes of the phase-in period. In making this decision, the agency notes that the estimated benefits from the NPRM would not be significantly affected by the delayed phase-in of certain requirements, as those estimates were based on research conducted using rear visibility systems that were not designed to conform to all of the aforementioned performance requirements. In addition, we have considered the significant additional costs in compelling manufacturers to conduct equipment redesigns outside of the normal product design cycle. In order to avoid significantly increasing the cost of this rule and to enable manufacturers to focus resources, instead, on deploying rear visibility systems in a greater number of vehicles in the near term, today's final rule delays the aforementioned requirements until the end of the 48 month phase-in period.

Response Time Test Procedure and the ''Backing Event''

As with the phase-in schedule, the agency received various comments regarding the timing of the presentation of the rearview image to the driver that suggested approaches that would tend to decrease the costs and increase flexibility for manufacturers while still preserving ability of the required rear visibility systems to address the backover safety problem. While today's rule adopts the proposal from the NPRM requiring rear visibility systems to display an image of the required field of view to the driver within 2.0 seconds after the driver places the vehicle in the reverse direction, the agency learned through the comments received that this requirement can be more burdensome for manufacturers if the system response time is tested immediately after the vehicle is started. Thus, as described further in this document, the agency has adopted a test procedure in today's final rule to condition the vehicle prior to evaluating rear visibility system response time. As this test procedure is based on the available data on real world driving conditions, the procedure affords manufacturers additional flexibility to design the initialization process for their rear visibility systems while still ensuring that the required rearview image is available at a time that is useful to a driver conducting backing maneuvers.

Further, today's final rule adopts a ''backing event'' definition in order to afford manufacturers additional design flexibility while still addressing the safety concerns that the agency intended to address with the proposed linger time and deactivation requirements in the NPRM. As further described in this document, the agency proposed linger time and deactivation requirements in the NPRM in order to ensure that the required rearview image is available to the driver at the appropriate time without becoming a distraction at an inappropriate time. Through the comments, the agency learned that the relatively inflexible linger time and deactivation requirements proposed in the NPRM could inhibit other safety and convenience features from being implemented by manufacturers (e.g., views designed to assist trailer hitching, parking, etc.). Thus, today's final rule adopts a definition of ''backing event'' and uses this definition to establish the points in time that the rearview image is required to be presented to the driver while still affording manufacturers the flexibility to implement additional safety and convenience features for the drivers.

Durability Testing and Luminance Requirements

Finally, the agency also modified the durability requirements to apply on a component level and did not adopt the luminance requirements to avoid imposing unnecessary testing burdens on the manufacturers where such burdens were not likely to produce a corresponding safety benefit. Through the comments received, the agency learned that ensuring a minimum level of durability of rear visibility system components can be achieved through component level testing rather than testing at the vehicle level. Further, the agency learned that luminance requirements alone would not ensure the quality of the image provided to the driver and would instead unnecessarily restrict the technologies that manufacturers can use to present the required rearview image to the driver. Thus, as further discussed in this document, the agency adopts the durability requirements from the NPRM at a component level and does not adopt the luminance requirements in today's final rule.

Other Methods to Reduce Costs and Increase Flexibility Do Not Fulfill the K.T. Safety Act

While the agency has made the aforementioned changes to the requirements proposed in the NPRM that are aimed at reducing costs while still preserving the safety benefits of today's rule, other methods to reduce costs that were explored (or suggested in the comments received) are not adopted in today's final rule because they do not meet the need for safety (and do not meet the requirements of the K.T. Safety Act).

Requiring a Lower-Cost Countermeasure or Utilizing More Performance-Oriented Standards

Throughout this rulemaking process, the agency has explored various countermeasure technologies and evaluated their ability to address the backover safety problem as required by the K.T. Safety Act. The agency conducted research to evaluate the effectiveness of various currently available technologies including additional mirrors, reverse sensors, and rearview video systems. After extensive testing, the agency concluded that drivers require the ability to see the area directly behind the vehicle in order to successfully avoid striking a pedestrian or an unexpected obstacle. In other words, rear visibility systems meeting the requirements of today's rule are the only currently available systems that can meet the need for safety specified by Congress in the K.T. Safety Act (backover crashes). The agency arrived at this conclusion after observing in our research that sensor-only systems have various technical limitations that lead to inconsistent object detection and that drivers with sensor-only systems generally either failed to respond to the sensor system's audio warning, or paused only momentarily before resuming the backing maneuver. Further, our research indicates that drivers were unable to avoid targets behind the vehicle when assisted with additional rear-mounted mirrors such as rear convex ''look-down'' or cross-view mirrors. We concluded that the limited field of view and significant distortion/

minification in such mirrors prevent drivers from successfully detecting and avoiding targets behind the vehicle. As these sensor-only and mirror-based rear visibility systems have demonstrated little to no success in inducing drivers to stop a backing maneuver to avoid a crash with a pedestrian behind the vehicle, their lower cost is outweighed by the substantially reduced benefits that are likely to be achieved by these systems. Thus, the agency believes that rear visibility systems meeting the requirements of today's rule are not only the most effective systems at addressing the backover safety problem but also the most cost effective system. Further, to adjust the requirements in today's rule to accommodate these other systems would not fulfill the requirements of the K.T. Safety Act as these other systems cannot be reasonably expected to address the backover crash problem.

Consistent with the requirements of the Motor Vehicle Safety Act, today's final rule establishes ''a minimum standard for motor vehicle or motor vehicle equipment performance.'' [15] While we acknowledge some commenters' desire for a more performance-oriented approach to the backover safety problem, we conclude that today's final rule is as performance-oriented as possible while still achieving the Motor Vehicle Safety Act's requirement that Federal Motor Vehicle Safety Standards ''meet the need for safety.'' [16] As Congress recognized when it enacted the Motor Vehicle Safety Act,[17] there is no clear distinction between standards that regulate performance versus those that regulate design. All safety standards necessarily will affect and preclude certain designs because the design of vehicles and equipment affects the quality of their performance. The extent to which a safety standard will restrict particular design is purely a matter of degree.[18] Thus, to fulfill all the applicable statutory requirements, the agency designs requirements to be as broad (i.e., performance-oriented) as possible without hindering the standard's ability to ''meet the need for safety.'' Our decisions in today's final rule follow this strategy. As we discuss in detail in Section III, below, the available data show that providing a driver with a view of the area behind the vehicle is currently the most effective way available to reduce backover crashes, as contemplated by the K.T. Safety Act. Thus, while today's rule requires systems to show a rearview image to the driver (in order to meet the need for safety), the rule uses performance-oriented requirements to enable manufacturers flexibility in determining how to present that image to drivers.

We further note, as we did in the NPRM, that technology is rapidly evolving. Thus, while today's final rule concludes that the most effective and currently available systems present the driver with a rearview image, the final rule does not require that a specific technology be used to provide a driver with an image of the area behind the vehicle, nor does today's rule preclude manufacturers from providing additional countermeasure technologies to supplement the required rear visibility system.

Applying Requirements by Vehicle Type

Further, the comments suggested, and the agency considered, the possibility of applying the rear visibility system requirements of today's rule by vehicle type. However, today's rule does not prescribe different requirements by vehicle type and applies the rear visibility requirements to all motor vehicles with a GVWR less than 10,000 pounds (except motorcycles and trailers) as directed by the K.T. Safety Act. As described above, the available data does not show that other currently available rear visibility systems (not meeting the requirements in today's rule) are able to effectively address the backover safety risk that the agency is required to address under the K.T. Safety Act. Thus, to apply different requirements by vehicle type in this rulemaking would mean applying the requirements of today's rule to only certain vehicle types and excluding others.

The agency does not believe that it can exclude any vehicle types covered by the K.T. Safety Act from this rule. While the K.T. Safety Act affords the agency discretion to apply different requirements to different vehicle types, the Act does not allow the agency to exclude (and apply no requirements to) any vehicle type covered by the K.T. Safety Act. Further, as discussed further in this preamble, the available data indicate that all vehicle types suffer from significant rear blind zones and contribute to backover crashes at a rate that is similar to their proportion of the vehicle fleet.[19] Thus, to exclude vehicles covered under the K.T. Safety Act from the requirements in today's rule would not only fail to meet the requirements of the K.T. Safety Act, but would also fail to address the backover safety need. As the vehicles covered by the K.T. Safety Act contribute proportionally to backover crashes resulting in an injury or a fatality, the agency believes that it is reasonable to apply the requirements of today's rule to all vehicles with a GVWR under 10,000 pounds (except motorcycles and trailers).

Conclusion

Given the requirements of the K.T. Safety Act and the National Traffic and Motor Vehicle Safety Act (''Vehicle Safety Act''), the totality of the available data continue to show that rear visibility systems meeting the requirements in today's final rule are the most effective and the most cost-effective countermeasure available to address the backover safety problem identified by Congress in the K.T. Safety Act. Data from agency testing and other currently available information continue to show that drivers using rearview video systems experience a statistically significant beneficial effect in avoiding a collision with an unexpected rear obstacle. As the agency seeks to achieve the goals of the K.T. Safety Act in the least burdensome fashion, the agency has made various modifications to the requirements in today's final rule. However, this final rule adopts the requirement from the NPRM that the driver must be afforded a view of the 20-foot by 10-foot zone directly behind the vehicle. The data continue to show that rear visibility systems with this characteristic are the most effective solution available to address the backover safety problem that the agency is required to address under the K.T. Safety Act. To adopt requirements allowing countermeasures without this

[15] *See* 49 U.S.C. 30102(a)(9).

[16] *See* 49 U.S.C. 30111(a).

[17] For example, Senator Magnuson recognized that standards are not either performance standards or design standards (i.e., there is not a dichotomy between the two) when he said that some safety standards would necessarily determine the configuration of some vehicle components. *See* 112 C.R. 20600 (Aug. 31, 1966).

[18] Courts have also recognized the difficulty in applying the distinction between performance and design standards in concrete situations (because specifying performance often entails restrictions on design) and did not invalidate safety standards based on their indefinite place on the conceptual spectrum between performance and design. *See Washington* v. *Dept. of Transp.,* 84 F.3d 1222, 1224–25 (10th Cir. 1996) (citing *Wood* v. *General Motors Corp.,* 865 F.2d 395, 416–17 (1st Cir. 1988); *Chrysler Corp.* v. *Department of Transp.,* 515 F.2d 1053515 F.2d at 1058–59 (6th Cir. 1975)).

[19] As discussed further in this document, all vehicles contribute to backover crashes at a rate that's similar to their proportion of the fleet. For example, passenger cars comprise 57% of the vehicle fleet and are responsible for 52% of backover injuries. Utility vehicles are 17% of the fleet and are responsible for 16% of the backover injuries. Vans are 10% of the fleet and responsible for 11% of the backover injuries. Pickup trucks are 16% of the fleet and responsible for 14% of the injuries. However, some vehicle types contribute to more fatalities than other vehicle types.

characteristic or applying the requirements in this rule to only a subset of the vehicle types specified in the K.T. Safety Act would not fulfill the requirements of that Act.

Throughout this rulemaking process the agency has been sensitive to the potential costs of today's rule and has explored multiple potential methods for reducing the potential burden of today's rule. Although the additional information received by the agency since the NPRM affords the agency a more refined understanding of the potential costs and benefits of today's rule, no comments or research data received provide the agency with a rational basis to adopt requirements that would permit rear visibility systems other than those permitted in today's rule. While the costs of the rule exceed its quantifiable benefits, Executive Orders 12866 and 13563 call upon us to assess the costs and benefits of a rulemaking, including those costs and benefits that are difficult to quantify and, unless prohibited by statute, choose the regulatory alternative that maximizes net benefits. Further, to the extent permitted by law, regulations must be designed in the most cost-effective manner to achieve the regulatory objective. As summarized later in this document and explained in detail in the accompanying Final Regulatory Impact Analysis, the agency has carefully considered all impacts of this rule and has chosen the most cost-effective option in meeting the statutory mandate. All available information and agency analysis continues to demonstrate that rear visibility systems meeting the requirements of today's rule are the most effective, least burdensome, and most cost-effective systems that can address the backover safety risk and fulfill the requirements of the K.T. Safety Act. Thus, the agency has chosen the most cost-effective means of achieving Congress's purpose in enacting the K.T. Safety Act. Moreover, as detailed in the NPRM and again discussed here in this final rule, the Department maintains that there are significant unquantifiable considerations associated with this rule, in particular the young age of many victims and the fact that many drivers involved in backover crashes are relatives or caretakers of the victims, that support this action.

II. Background and Notice of Proposed Rulemaking

a. Cameron Gulbransen Kids Transportation Safety Act and National Traffic and Motor Vehicle Safety Act

General Requirements

Subsection 2(b) of the K.T. Safety Act directs the Secretary of Transportation to initiate rulemaking to revise FMVSS No. 111 to expand the required field of view so as to enable drivers of motor vehicles to detect areas behind the motor vehicle. In the same section, Congress explained that the purpose of this requirement is to reduce death and injury resulting from backover crashes—especially crashes involving young children and disabled persons. The Act permitted the Secretary to prescribe different requirements for different vehicle types. It further allowed the Secretary to achieve the goals of the Act through the provision of additional mirrors, sensors, cameras, or other technology that could expand the driver's field of view.

The K.T. Safety Act did not intend to cover all motor vehicles that are regulated under the Vehicle Safety Act.[20] While subsection 2(e) of the K.T. Safety Act defines the term ''motor vehicle,'' for its purposes, as all vehicles covered under the Vehicle Safety Act, it specifically excludes all vehicles with a gross vehicle weight rating greater than 10,000 pounds, motorcycles, and trailers.

Given that subsection 2(b) prescribes amendments to a Federal motor vehicle safety standard, this rulemaking is governed not only by the K.T. Safety Act, but also by the requirements of the Vehicle Safety Act. The relevant provisions in the Vehicle Safety Act are those in section 30111 of title 49 of the United States Code. Section 30111 states that the Secretary of Transportation shall prescribe motor vehicle safety standards. Each standard shall be practicable, meet the need for motor vehicle safety, and be stated in objective terms. When prescribing a motor vehicle safety standard under this chapter, the Secretary shall consider relevant available motor vehicle safety information; consult with appropriate State or interstate authorities (including legislative committees); consider whether a proposed standard is reasonable, practicable, and appropriate for the particular type of motor vehicle or motor vehicle equipment for which it is prescribed; and consider the extent to which the standard will carry out the purposes of the Vehicle Safety Act.

Deadlines

Congress enacted the K.T. Safety Act on February 28, 2008. The Act directed the Secretary to initiate rulemaking to amend FMVSS No. 111 within 12 months of enactment (February 28, 2009). The Act further directed the Secretary to publish a final rule amending FMVSS No. 111 within 36 months of enactment (February 28, 2011). In the event that any of the aforementioned deadlines could not be met, subsection 4 required the Secretary to establish a new deadline and notify the Committee on Energy and Commerce of the House of Representatives and the Committee on Commerce, Science and Transportation of the Senate of the new deadlines and the reasons the deadlines specified in the Act could not be met.

On February 25, 2011, the agency determined that the deadline for publication of today's final rule could not be met and the Secretary sent notice to the Committee on Energy and Commerce of the House of Representatives and the Committee on Commerce, Science and Transportation of the Senate as required by the K.T. Safety Act.[21] While the NPRM was published on December 7, 2010 and provided for a 60-day comment period, the agency determined that an additional 45-day comment period would be necessary. The agency informed Congress of its intent to hold a public hearing and technical workshop in order to facilitate the exchange of ideas over the backover safety problem. The agency also stated that additional time was required in order to analyze the information acquired in these two public meetings. Thus, as required by the K.T. Safety Act, the Secretary sent the aforementioned notification and established December 31, 2011 as the new deadline.

However, due to the large volume of comments and the complexity of the issues discussed in this rulemaking, the Secretary determined that more time was necessary to complete the final review process. Thus, the Secretary sent additional notifications to the required committees establishing the new deadline of February 29, 2012.[22] A subsequent deadline of December 31, 2012 was established on February 28, 2012 when the Secretary sent additional notifications to the required committees

[20] The Vehicle Safety Act defines a ''motor vehicle'' as ''a vehicle driven or drawn by mechanical power and manufactured primarily for use on public streets, roads, and highways, but does not include a vehicle operated only on a rail line.'' 49 U.S.C. 30102(a)(6)

[21] Docket No. NHTSA–2010–0162–0148.

[22] Docket No. NHTSA–2010–0162–0230.

explaining that further research and analysis would be necessary in order to ensure that the final requirements are as efficient and protective as possible.[23] Specifically, the letter noted that additional analysis and/or research of a wider range of driver and vehicle types would help to ensure that the final rule is appropriate and that the underlying analysis is robust. As further described below, the agency conducted additional research and analysis to expand the vehicle, driver, and obstacle presentation methods.

While the agency completed this additional research in 2012, the Secretary determined that additional time would be necessary to finalize this rule and sent the notifications to the required committees under the K.T. Safety Act establishing a deadline of January 2, 2015.[24] Given that vehicles with rearview video systems are increasingly prevalent in the light vehicle fleet, we believed that additional analysis of crashes investigated by the Special Crash Investigations program would contribute significantly to our understanding of the backover crash problem. More specifically, the agency attempted to identify and analyze crashes involving vehicles with rearview video systems in order to refine further its understanding of how the proposed requirements address the real world safety risk.

As further discussed below, the agency could not identify as many cases for analysis as it hoped (potentially because rearview video systems are already having an impact on reducing backover crashes). Only two cases involving vehicles with rearview video systems could be identified and these cases are analyzed in the sections that follow. However, due to the lack of available cases, the agency believes that further delay of the rule is unlikely to yield much additional information for analysis. Thus, after considering these new facts along with the safety implications of further delay, the Department has decided that it is appropriate to issue today's final rule at this time—before the January 2, 2015 deadline.

Phase-in

In addition to these requirements, the K.T. Safety Act required that the safety standards prescribed pursuant to the Act establish a phase-in period for compliance. The Act further required that the phase-in period prescribe full compliance with the aforementioned safety standards no later than 48 months after issuance of the final rule. The K.T. Safety Act instructed the Secretary to consider whether to require a phase-in schedule based on vehicle type according to data regarding the frequency of backover incidents for each vehicle type.

b. Safety Problem

Definition of the Backover Problem and Summary of the Available Data

In the ANPRM and NPRM, we specifically described a backover as a type of incident, in which a non-occupant of a vehicle (e.g., a pedestrian or cyclist) is struck by a vehicle moving in reverse. As a majority of backover crashes occur off of public roadways, NHTSA's traditional methodologies for collecting data as to the specific numbers and circumstances of backover incidents could not give the agency a complete picture of the scope and circumstances of these types of incidents. Thus, in addition to statistics from traditional sources such as FARS[25] and NASS–GES[26], our research has utilized information from the ''Not-in-Traffic Surveillance'' (NiTS) system which collects information about all non-traffic crashes, including non-traffic backing crashes. Based on the aforementioned sources, NHTSA estimated that backing crashes of all types result in approximately 410 fatalities and 42,000 injuries each year. Of those, the subset of backover crashes (crashes involving non-occupants of vehicles such as pedestrians and cyclists) comprises 267 fatalities and 15,000 injuries.

Of these backover crashes, not all involve the vehicle types contemplated by Congress in the K.T. Safety Act (cars, trucks, MPVs, and vans with GVWR of 10,000 pounds or less). When only these vehicles are taken into account, the data indicate that a total population of 210 fatalities and 15,000 injuries[27] are due to light vehicle backover crashes.[28] However, the data are less clear when examining the distribution of backover crashes by vehicle type. Table 6 illustrates that pickup trucks and MPVs are statistically overrepresented in backover fatalities when compared to all non-backing traffic injury crashes and to their proportion of the vehicle fleet with a GVWR of less than 10,000 pounds. Our analysis revealed that while these vehicle types were statistically overrepresented in backover-related fatalities, they were not significantly overrepresented in backover crashes generally. In other words, these data indicate that while these types of vehicles are proportionately involved in backover crashes, those involving light trucks and sport utility vehicles are more likely to be fatal.

[23] Docket No. NHTSA–2010–0162–0231.

[24] Docket No. NHTSA–2010–0162–0251.

[25] The Fatality Analysis Reporting System (FARS) is a nationwide census that provides yearly data regarding fatal injuries suffered in motor vehicle traffic crashes. *See* NHTSA, NCSA Reports and Publications, *http://www.nhtsa.gov/FARS.*

[26] The National Automotive Sampling System General Estimates System (NASS–GES) is a nationally representative sample of police reported motor vehicle crashes. *See* NHTSA, NASS General Estimates System, *http://www.nhtsa.gov/NASS.*

[27] Due to rounding, injuries for both light vehicles and all vehicles are estimated to be 15,000.

[28] *See* Final Regulatory Impact Analysis, available in the docket number referenced at the beginning of this document.

TABLE 6—PASSENGER VEHICLE BACKOVER FATALITIES AND INJURIES BY VEHICLE TYPE [29]

Backing vehicle type	Fatalities	% of Fatalities	Estimated injuries	Estimated % of injuries	% of Non-Backing crashes	% of Fleet
Car	59	28	8,000	52	58	57
Utility Vehicle	56	27	2,000	16	18	17
Van	23	11	2,000	11	7	10
Pickup	68	33	2,000	14	15	16
Other Light Vehicle	3	2	1,000	7	2	0
Passenger Vehicles	210	100	15,000	100	100	100

Source: FARS 2007–2011, NASS–GES 2007–2011, NiTS 2007–2011.
Note: Estimates may not add up to totals due to independent rounding.

Our data further indicated that young children under the age of 5 and adults over the age of 70 are disproportionately represented in passenger vehicle backover crashes. Table 7 details the ages for fatalities and injuries for backover crashes involving all vehicles as well as those involving passenger vehicles only. It also details the proportion of the U.S. population in each age category from the 2007 U.S. Census Bureau's Population Estimates Program for comparison. When restricted to backover fatalities involving passenger vehicles, children under 5 years old account for 39 percent of the fatalities and adults 70 years of age and older account for 29 percent.

TABLE 7—ALL BACKOVER CRASH FATALITIES AND INJURIES BY VICTIM AGE [30]

Age of victim	Fatalities	Percent of fatalities	Estimated injuries	Estimated % of injuries	Percent of population
All Vehicles					
Under 5	84	31	1,000	6	7
5–10	8	3	1,000	4	7
10–19	4	1	1,000	9	14
20–59	73	27	7,000	49	55
60–69	27	10	2,000	11	8
70+	70	26	3,000	20	9
Unknown	2	1	*0	1	
Total	267	100	15,000	100	100
Passenger Cars					
Under 5	82	39	1,000	6	7
5–10	8	4	1,000	4	7
10–19	1	1	1,000	9	14
20–59	38	18	7,000	48	55
60–69	19	9	2,000	11	8
70+	61	29	3,000	21	9
Unknown	1	0	*0	1	
Total	210	100	15,000	100	100

Note: * indicates estimate less than 500, Estimates do not add up to totals due to independent rounding.
Note: Source: US Census Bureau, Population Estimates Program, 2007 Population Estimates; FARS 2007–2011, NASS–GES 2007–2011, NiTS 2007–2011.

In addition, we examined the data specifically in regards to children under the age of 5. Table 8 (below) presents passenger vehicle backover fatalities by year of age for victims less than 5 years old. Out of all backover fatalities involving passenger vehicles, 24 percent (49 out of 210) of victims are 1 year of age and younger.

TABLE 8—BREAKDOWN OF BACKOVER CRASH FATALITIES INVOLVING PASSENGER VEHICLES FOR VICTIMS UNDER AGE 5 YEARS [31]

Age of victim (years)	Percent of fatalities
0	2
1	59
2	21
3	11
4	7
Total	100

Source: US Census Bureau, Population Estimates Program, 2007 Population Estimates; FARS 2007–2011, NASS–GES 2007–2011, NiTS 2007–2011

[29] *Id.*

[30] *Id.*

[31] *Id.*

Separately, the agency also examined the FARS and NASS–GES data from 2007–2010 in order to determine whether or not any persons with disabilities were involved in backover crashes. During the four-year period between 2007 and 2010, the agency identified one case in the FARS database involving a vision-impaired pedestrian where the backover crash resulted in a fatality. When examining the same timeframe, the agency identified two backover cases in the NASS–GES database that involved persons in wheelchairs that resulted in injuries. Under both databases, the agency found other cases where the individual was specified as ''impaired'' (1 in FARS, and 11 in NASS–GES). While the agency cannot identify the specific type of ''impairment'' that the individual had at the time of the backover crash, these individuals may have had a disability (permanent or temporary) at the time of the backover crash.[32]

Special Crash Investigation of Backover Crashes

As reported in the ANPRM and the NPRM, NHTSA conducted an analysis of police-reported backover crashes through a Special Crash Investigation (SCI) program during the earlier stages of this rulemaking. The SCI program operates by receiving notifications of potential backover cases from several different sources including media reports, police and rescue personnel, contacts within NHTSA, reports from the general public, as well as notifications from the NASS. For purposes of that analysis of SCI cases, an eligible backover case was defined as a crash in which a light passenger vehicle's back plane strikes or passes over a person who is either positioned to the rear of the vehicle or is approaching from the side. These cases investigated were more likely to be cases involving children—however, some cases did involve adults. The majority of notifications received did not meet the criteria for case assignment. Typically, the reasons for not pursuing further include: (1) The reported crash configuration is outside of the scope of the program; (2) minor incidents with no fatally or seriously injured persons; or (3) incidents where cooperation cannot be established with the involved parties. As an example, many reported incidents are determined to be side or frontal impacts, which were not investigated for the purposes of this rulemaking. The agency was less likely to investigate a case involving an adult unless the adult was seriously injured or killed or if the backing vehicles were equipped with backing or parking aids.[33]

The agency conducted these investigations because the special crash investigations enhance the agency's understanding of the different circumstances that can lead to a backover crash. As the SCI cases revealed, there are a number of variables that can lead to a backover crash. NHTSA completed special crash investigations of 58 backover cases.[34] The 58 backing vehicles in these cases comprised 18 passenger cars, 22 MPVs, 5 vans (including minivans) and 13 pickup trucks. For cases in which an estimated speed for the backing vehicle was available, the speed of the backing vehicle ranged between approximately 0.62 and 10 mph. Of the 58 SCI backover cases, the vast majority (55) occurred in daylight conditions. Further, half of the cases investigated by NHTSA involved a non-occupant fatality.

In the cases investigated by NHTSA, most of the victims were either children (who were too short to be seen behind the vehicle), or adults who had fallen or were bent over and were also thus not in the driver's field of view. Specifically, 51 of the cases involved children (ranging in age from less than 8 months old up to 13 years old) who were struck by vehicles.[35] Of the 8 adult victim cases investigated by NHTSA, 4 were in an upright posture either standing or walking. Of the remaining four adult victims documented in the SCI cases, one was bending over behind a backing vehicle to pick up something from the ground, one was an elderly person who had fallen down in the path of the vehicle prior to being run over, and the postural orientation of the remaining two was unknown.

Based on NHTSA's analysis of the quantitative data and narrative descriptions of how the 58 SCI-documented backover crashes transpired, NHTSA estimated the general path that the victim took prior to each backover crash. We note that this analysis is unable to identify the victim's location, speed, and trajectory at a time that is relevant to the backover crash (i.e., after the vehicle has begun the backing maneuver). However, this analysis does enhance the agency's understanding of the varied circumstances that can lead to a backover crash. The breakdown of the victim's path of travel prior to being struck is as follows: 41 were approaching from the right or left of the vehicle at some point in time prior to being struck by the vehicle, 12 were in the path of the backing vehicle, 4 were unknown, and one was ''other.''

Subsequent to the ANPRM, NHTSA further analyzed these SCI backover cases to assess how far the vehicle traveled before striking the victim. Distances traveled for the cases investigated by NHTSA ranged from 1 to 75 feet. Overall, as shown in Table 9 below, this analysis showed that in 77 percent of the real-world, SCI backover cases investigated by NHTSA, the vehicle traveled less than 20 feet. While the subset may or may not be nationally representative of all backing crashes, we believe this information from the SCI cases is useful in the development of a required visible area and the associated development of a compliance test.

[32] The FARS and NASS–GES coding system has a separate category for individuals that were alcohol-impaired. However, the FARS and NASS–GES coding system does not differentiate between persons that have physical disabilities (e.g., individuals using crutches) and persons impaired by substances that are not alcohol (e.g., wrong dosage of medication). Thus, while persons with temporary or permanent disabilities could be included in this category, the database information is not specific enough for the agency to determine what portion of these persons had a physical disability at the time of the backover crash.

[33] The SCI cases reviewed by NHTSA are available in the SCI Electronic Case Viewer at *http://www.nhtsa.gov/SCI.*

[34] While NHTSA analyzed a total of 58 SCI cases during the course of its research, some analyses were completed before all 58 cases were available. For example, when NHTSA analyzed crash avoidability using data from the SCI cases only 50 cases were available. *See* Final Regulatory Impact Analysis, available in the docket number referenced at the beginning of this document.

[35] As the selection of SCI cases, media reports, and other sources of information available to NHTSA on backover crashes may tend to report more heavily on accidents involving vulnerable populations such as children or the elderly, the information contained in the SCI cases analyzed in this rulemaking may be over representative of the incidence of backovers involving these populations.

TABLE 9—AVERAGE DISTANCE TRAVELED BY BACKING VEHICLE FOR FIRST 58 SCI BACKOVER CASES AND PERCENT OF BACKOVER CRASHES THAT COULD BE AVOIDED THROUGH VARIOUS COVERAGE RANGES [36]

	Number of SCI cases	Average distance traveled prior to strike (ft.)	7ft (%)	15ft (%)	20ft (%)	35ft (%)
Car	18	13.7	39	56	78	89
SUV	22	13.4	27	68	82	100
Minivan	4	31.0	25	50	50	75
Van	1	54.5	0	0	0	0
Pickup	13	17.2	38	69	69	92
All Light Vehicles	58	26.0	33	63	77	93

Analysis of Backover Crash Risk by Monte Carlo Simulation

NHTSA also calculated backover crash risk as a function of pedestrian location using a Monte Carlo simulation.[37] Data from a recent NHTSA study of drivers' backing behavior,[38] such as average backing speed and average distance covered in a backing maneuver, were used to develop a backing speed distribution and a backing distance distribution that were used as inputs to the simulation. Similarly, published data [39] [40] [41] characterizing walking and running speeds of an average 1-year-old child were also used as inputs. A Monte Carlo simulation was performed that drew upon the noted vehicle and pedestrian motion data to calculate a probability-based risk weighting for a test area centered behind the vehicle. The probability-based risk weightings for each grid square were based on the number of pedestrian-vehicle backing crashes predicted by the simulation for trials for which the pedestrian was initially (i.e., at the time that the vehicle began to back up) in the center of one square of the grid of 1-foot squares spanning 70 feet wide by 90 feet in range behind the vehicle. A total of 1,000,000 simulation trials were run with the pedestrian initially in the center of each square.

The output of this analysis calculated relative crash risk values for each grid square representing a location behind the vehicle. The results suggested that, if pedestrians were randomly distributed in areas behind the vehicle, an area 12 feet wide by 36 feet long centered behind the vehicle would address pedestrian locations having relative crash risks of 0.15 and higher (with a risk value of 1.0 being located directly aft of the rear bumper). To address crash risks of 0.20 and higher, an area 7 feet wide and 33 feet long centered behind the vehicle would need to be covered. The analysis showed that an area covering approximately the width of the vehicle out to a range of 19 feet would encompass risk values of 0.4 and higher.

c. Advance Notice of Proposed Rulemaking

In response to the K.T. Safety Act, NHTSA initiated rulemaking to amend FMVSS No. 111 to improve a driver's ability to see areas to the rear of a motor vehicle to reduce backover incidents by publishing an ANPRM in the **Federal Register** on March 4, 2009. In addition to complying with the statutory deadline for initiating rulemaking, we published the ANPRM in order to solicit public comment on the current state of research and the efficacy of available countermeasures. In this notice, we acknowledged the backover safety problem and its disproportionate effect on small children and the elderly. We further described our ongoing research efforts and presented a series of specific questions for public comment.

The research presented in the ANPRM focused on four major topic areas. The first area involved the nature of backover incidents and backing crashes generally. We presented the details of documented backover incidents, including the locations of backover victims, the paths the victims took to enter the path of the vehicle, and the visibility characteristics of the vehicles involved. In the ANPRM, we outlined the information we had regarding these crashes, whether the lack of visibility played a significant role, and whether or not the characteristics of a class or type of vehicle could be considered a contributing factor.

The second area of focus involved the evaluation of various strategies regarding the vehicles types and the appropriate rear visibility countermeasure. We presented three possible strategies in the ANPRM and requested public comment. The first strategy raised by the ANPRM was to ensure that the vehicles which are over-represented in terms of fatalities and injuries would have their rear field of view improved. Such a strategy would have focused on vehicles such as pickup trucks or MPVs, which were presumed to be overrepresented. The second strategy explored sought to establish a minimum blind zone area for vehicles under 10,000 pounds. Our research at the time suggested that a vehicle's rear blind zone area may be statistically correlated with its rate of backing crashes. Using this correlation, we conjectured that it may have been possible to determine which vehicles warranted certain rear visibility improvements based on the size of their rear blind zones and the setting of a ''threshold.'' Finally we also explored the possibility that the rear visibility countermeasures should be applied uniformly to all vehicles contemplated by the K.T. Safety Act.

The third topic focused on the evaluation of various countermeasures. After consulting past agency research, industry and other outside sources, as well as conducting new research, four types of countermeasures were presented and described in the ANPRM. These countermeasures included direct vision (i.e., what can be seen by a driver glancing directly out a vehicle's windows), rear-mounted convex mirrors, rear object detection sensors

[36] These distances do not indicate the distance between the victim and the vehicle at the start of the backing maneuver because it shows the distance that the vehicle traveled before striking the pedestrian. The SCI cases do not have sufficient detail to enable the agency to determine the location of the pedestrian at the beginning of the backing maneuver.

[37] 74 FR 9484.

[38] Mazzae, E.N., Barickman, F.S., Baldwin, G.H.S., and Ranney, T.A. (2008). On-Road Study of Drivers' Use of Rearview Video Systems (ORSDURVS). National Highway Traffic Safety Administration, DOT HS 811 024.

[39] Manual on Uniform Traffic Control Devices for Streets and Highways, 2003 Edition. Washington, DC: FHWA, November 2003.

[40] Milazzo, J.S., Rouphail, J.E., and Alien, D.P. (1999). Quality of Service for Interrupted-Flow Pedestrian Facilities in Highway Capacity Manual 2000. Transportation Research Record, No. 1678 (1999): 25–31.

[41] Chou, P., Chou, Y., Su, F., Huang, W., Lin, T. (2003). Normal Gait of Children. Biomedical Engineering—Applications, Basis & Communications, Vol. 15 No. 4 August 2003.

(such as ultrasonic or radar-based devices), and rearview video (RV) systems. While we noted that research was still ongoing, the ANPRM described how these systems work, how well they perform in identifying pedestrians, and how effectively drivers may use them.

Finally, the fourth topic involved consideration of technical specifications and test procedures that could be used to describe and evaluate the performance aspects of direct view, rear-mounted convex mirrors, rear object detection sensors, and rearview video (RV) systems. The agency presented preliminary information on potential technical specifications and test procedures and solicited information on how these specifications and procedures should be refined for the purposes of developing repeatable compliance tests.

In addition to presenting these four areas of research, NHTSA also requested comment on more than forty specific questions in the ANPRM. We requested public input on a variety of topics including studies on the effectiveness of various indirect rear visibility systems (i.e., devices that aid a driver in seeing areas around a vehicle, such as mirrors or video systems) that have been implemented in the U.S. and/or abroad, and technological possibilities that could enhance the reliability of existing technologies. Further, the agency sought information on the costs of implementation of all available technologies to develop more robust cost and benefit estimates.

In response to the ANPRM, the agency received comments from 37 entities, including industry associations, automotive and equipment manufacturers, safety advocacy organizations, and 14 individuals. Generally, the comments covered the main research areas detailed in the ANPRM. With regard to the issue of which vehicles most warrant improved rear visibility, vehicle manufacturers generally desired to focus any expansion of rear visibility on the particular types of vehicles (i.e., trucks, vans, and MPVs within the specified weight limits) that they believed posed the highest risk of backover crash fatalities and injuries. However, vehicle safety organizations and equipment manufacturers generally suggested that all vehicles need to have expanded rear fields of view.

With regard to the issue of what technology would be effective at expanding the rear field of view for a driver, commenters discussed additional mirrors, sensors, and rearview video combined with sensors. Some commenters provided input regarding test procedure development and rear visibility countermeasure characteristics, such as visual display size and brightness, and graphic overlays superimposed on a video image. Some also discussed whether it is appropriate to allow a small gap in coverage immediately behind the rear bumper. Finally, commenters generally agreed with the cost estimates provided by the agency. However, the Consumers Union and Magna comments did suggest that our estimates of the cost of individual technologies seemed high and that there would be larger cost reductions over time than the agency had indicated.

Because the ANPRM had an extremely broad scope, the comments addressed a wide variety of issues and provided a large amount of information. A more extensive discussion of the ANPRM, the comments that the agency received in response, and our analysis and response to these comments is available in the NPRM. However, specific comments on the ANPRM which are relevant to our discussion of today's final rule are also referenced by issue in section III, *Final Rule and Response to Comments.*

d. Notice of Proposed Rulemaking

After evaluating the comments on the ANPRM and conducting additional research, we published an NPRM on December 7, 2010.[42] In that notice, we proposed to apply the rear visibility requirements to all passenger cars, MPVs, trucks, buses, and low-speed vehicles with a GVWR of 10,000 pounds or less by specifying an area behind the vehicle that a driver must be able to see when the vehicle is in reverse gear. The proposal tentatively concluded that drivers need to be able to see a visual image of a 32-inch tall cylinder with a 12-inch diameter behind the vehicle over an area 5 feet to either side of the vehicle centerline by 20 feet in longitudinal range from the vehicle's rear bumper surface. We further proposed various performance criteria for the visual display including luminance, rearview image response time, and image linger and driver deactivation restrictions, as well as durability requirements. Pursuant to the K.T. Safety Act, the NPRM also proposed a phase-in schedule for compliance.

The NPRM proposed to apply rear visibility improvements to all passenger cars, MPVs, trucks, buses, and low-speed vehicles with a GVWR of 10,000 pounds or less because the available data showed no clear basis for excluding certain vehicles. As noted above, the ANPRM and the commenters on the ANPRM explored various possibilities for establishing rear visibility countermeasures which would be applied based on vehicle type (such as MPVs, trucks, and buses) or based on a blind zone threshold. However, as the available data indicated that substantial numbers of fatalities and injuries are caused by all types of light vehicles, we did not propose in the NPRM to limit the application of rear visibility countermeasures by vehicle type. Further, our data showed that applying the rear visibility countermeasure by a blind zone area threshold lacked a sufficient statistical basis. The available data demonstrated that vehicles with comparatively small blind zones still had similar backover crash rates as other vehicles. In addition, the agency concluded that applying rear visibility countermeasures to all vehicles with a GVWR of 10,000 pounds or less would most closely follow the intent of Congress in the K.T. Safety Act. Thus, the NPRM proposed to apply the rear visibility improvements to all vehicles contemplated by Congress under the K.T. Safety Act.

We also expressed in the NPRM our view that rearview video systems represent the most effective technology available to address the problem of backover crashes. Our data showed that rear-mounted convex mirrors and sensor-based object detection systems offered few benefits compared to rearview video systems due to system performance and driver use issues. Studies conducted by NHTSA showed that sensors and mirrors, while able to detect pedestrians to some degree, simply did not induce the driver response needed to prevent backover crashes. The NPRM noted that a sensor-activated warning of the presence of an obstacle often does not lead to a successful (i.e., timely and sufficient) crash avoidance response from the driver unless the driver is also provided with visual confirmation of obstacle presence. Thus, the NPRM proposed to afford the driver a visual display which offered a view of the area immediately behind the vehicle.

In the NPRM, we tentatively concluded that the area covered by the proposed rearview countermeasure should be 20 feet by 10 feet. In making this determination, we used various sources of information including the comments received from the ANPRM, the available safety data, our review of special investigations of backover crashes, and a computer simulation. For example, we examined the typical distances that backover-crash-involved vehicles traveled from the location at

[42] 75 FR 76186.

which they began moving rearward to the location at which they struck a pedestrian. We tentatively concluded that an area with a width of 10 feet (5 feet to either side of a rearward extension of the vehicle's centerline) and a length of 20 feet extending backward from a transverse vertical plane tangent to the rearmost point on the rear bumper encompasses the highest risk area for children and other pedestrians to be struck. Thus, we proposed in the NPRM that test objects, of a particular size, within that area must be visible to drivers when they are conducting backing maneuvers.

In the NPRM we also expressed our view that, in order to maintain the level of effectiveness that we have seen in our testing of existing rearview video systems, we needed to propose a minimum set of performance requirements. Specifically, the NPRM set forth requirements for the performance of the visual display luminance, a minimum rearview image size, a rearview image response time requirement, durability requirements for exterior components, and provisions against driver deactivation and excessive rearview image linger. In drafting these proposed requirements, the agency strove to afford manufacturers flexibility to meet these requirements as they see fit (such as through the development of new technologies). Since we stated in the NPRM that most, if not all, rearview video systems that would likely be used by manufacturers to meet the proposed minimum set of requirements already met these requirements, we did not believe that the adoption of these additional requirements would increase the cost of this existing technology.

Further, pursuant to section 2(c) of the K.T. Safety Act, we proposed a phase-in schedule that would be completed within 48 months of the publication of the final rule. Because we anticipated publishing a final rule by the statutory deadline of February 28, 2011, we noted that the rule must require full compliance not later than February 28, 2015. However, we were conscious of the fact that, for safety standard compliance purposes, model years begin on September 1 and end on August 31 and that February 28 falls in the middle of a model year. Thus, the agency tentatively concluded that vehicle manufacturers would need, as a practical matter, to begin full compliance at the beginning of that model year, i.e., on September 1, 2014. Accordingly, NHTSA proposed the following phase-in schedule:

- 0% of the vehicles manufactured before September 1, 2012;
- 10% of the vehicles manufactured on or after September 1, 2012, and before September 1, 2013;
- 40% of the vehicles manufactured on or after September 1, 2013, and before September 1, 2014; and
- 100% of the vehicles manufactured on or after September 1, 2014.

Finally, the NPRM also proposed a compliance test with which to evaluate the field of view and image size requirements. The proposed test would utilize a photography camera with an imaging sensor located at the eye point of a 50th percentile male. The test procedure would then take a photograph of the test objects designed to simulate the height and width of an 18-month-old toddler as they are presented in the rear visibility system display. This photograph would then be used to assess the compliance of the rear visibility system by determining if the required portions of the seven test objects, located along the perimeter of the required field of view, are visible and displayed at a sufficient size.

e. Summary of Comments on the NPRM

In response to the NPRM, the agency received comments from a wide variety of commenters including trade associations, manufacturers, advocacy groups, parts suppliers, and individuals. The advocacy groups submitting comments included KidsAndCars.org, the Insurance Institute for Highway Safety (IIHS), the Automotive Occupant Restraints Council, the American Academy of Pediatrics, the Consumers Union, and the Advocates for Highway Safety (the Advocates). In addition to the trade associations representing manufacturers including the Alliance of Automobile Manufacturers (the Alliance), the National Truck Equipment Association (NTEA), the Motor & Equipment Manufacturers Association (MEMA), the School Bus Manufacturers Technical Council, and Global Automakers, we also received comments from individual vehicle manufacturers such as Toyota Motor North America (Toyota), Volkswagen Group of America (Volkswagen), Porsche Cars North America (Porsche), Ford Motor Company (Ford), American Honda Motor Co. (Honda), Mercedes-Benz USA (Mercedes), General Motors Company (General Motors), and BMW Group (BMW). Additionally, the equipment manufacturers commenting on the NPRM included Brigade Electronics (Brigade), Gentex Corporation (Gentex), Magna Mirrors and Magna Electronics (Magna), Sony Electronics (Sony), Panasonic Corporation of North America (Panasonic), Sense Technologies, Rosco Vision Systems (Rosco), Rearscope North America (Rearscope), Continental, Valeo, IFM Electronic (IFM), and Delphi. Finally, the agency also received approximately 150 comments from individual commenters. In general, the commenters expressed support for the goals of this rulemaking pursuant to the K.T. Safety Act. However, many offered various recommendations on the most appropriate manner through which to achieve those goals.

The primary issue raised by the advocacy groups concerned our proposed test procedure for evaluating compliance with the field of view requirement. The advocacy groups were concerned that, as the proposed test procedure did not require that the field of view begin at the bumper, nor did it require that a large portion of the first row of test objects (placed 1 foot behind the bumper) be visible, significant blind spots can exist in a theoretically compliant rear visibility system. Citing the SCI cases and the Monte Carlo simulation used by the agency to determine the proposed coverage area of the field of view requirement, the advocacy groups requested that the final rule address these potential blind zones. Another issue raised by the advocacy groups involved their recommendation that image response time be reduced to 1.0 second or less. The advocacy groups asserted that there is a significant safety risk that drivers may begin backing their vehicles without the benefit of the rear visibility system if they are not promptly presented with the required field of view.

On the other hand, while vehicle manufacturers generally support the rule, the most significant concern raised by the manufacturer comments focused on the cost and feasibility of specific performance requirements within the proposed phase-in schedule. First, the manufacturers asserted that the agency was wrong to assume, as it did in the NPRM, that most rearview video systems that are currently in use by the manufacturers would meet all of the proposed requirements in the NPRM. For example, many manufacturers commented that their current rearview video systems would not be able to meet the response time requirement under certain situations. The NPRM proposed a response time requirement which prescribed that the compliant rearview image must be displayed within 2.0 seconds of selecting the reverse gear. The manufacturers commented that many of their rear visibility systems require initialization time and would not be able to meet the response time if the reverse gear was selected soon after the vehicle is activated. Thus, many

manufacturer comments requested various vehicle preconditions that would accommodate their rear visibility system initialization process. Similarly, the manufacturers were concerned their existing systems would not fully meet all of the image size, display luminance, deactivation, and linger time requirements.

As a result, the manufacturers were concerned that the proposed phase-in schedule would require that the manufacturers conduct redesigns to their existing rear visibility systems outside of the normal product development cycle. They contended in their comments that such a scenario would significantly increase the costs and burdens of compliance. Thus, the manufacturers requested that the agency delay some of the aforementioned requirements until the end of the statutory phase-in deadline in order afford manufacturers time to redesign their rear visibility systems in conjunction with the normal vehicle redesign schedule.

The equipment manufacturer comments, to varying degrees, contended that their products were able to meet the proposed requirements in the NPRM. Generally, commenters such as Sony, Magna, and Gentex expressed confidence that their products can be used to bring a vehicle into compliance with the proposed requirements. However, other suppliers, such as Sense Technologies, IFM Electronic, and Valeo, stated that the NPRM should not have concluded that technologies such as mirrors and sensors were not suitable countermeasures. In addition, suppliers offered comments as to the potential new rear visibility systems technologies that were being developed (such as automatic brake intervention, combination sensor/video systems, infrared or Doppler radar systems, etc.). Thus, many supplier comments requested that the agency avoid setting requirements that restrict the development of new technologies and rearview functions.

Finally, individual commenters expressed either general support or general opposition to the goals of this rule. The individual commenters expressing support for this rule generally cite the vulnerability of the population that is most likely to be victimized by this safety risk. A significant portion of these commenters either suffered a significant personal loss due to a backing crash or had an acquaintance who suffered a significant personal loss due to a backing crash. On the other hand, commenters opposed to this rule cited its high costs and questioned its potential effectiveness. Of these commenters, many opined that the more prudent manner in which to address the safety risks related with backover incidents is through driver training and education.

f. Public Hearing and Workshop

After publishing the NPRM, the agency decided to further solicit comments from the public by holding a public hearing and a technical workshop. On March 2, 2011, the agency published a notice in the **Federal Register** announcing these events.[43] The technical workshop was held on March 11, 2011 at NHTSA's Vehicle Research and Test Center in East Liberty, Ohio. The goal of this workshop was to provide a forum in which interested commenters could demonstrate their specific concerns with the agency's proposed test procedure. The public hearing was held on March 23, 2011, at the NHTSA headquarters in the U.S. Department of Transportation in Washington DC. This hearing provided an opportunity for the agency to hear from advocacy groups, organizations that provide rearview countermeasures, and the families of backover crash victims.

The participants in the technical workshop included representatives from Volkswagen, Sense Technologies, the Alliance, Global Automakers, Honda, Ford, Mitsubishi, and KidsAndCars.org. The participants generally presented areas they believed could be clarified regarding the proposed test procedure. The majority of the areas discussed were also presented in the various comments submitted in response to the NPRM such as durability testing, deactivation issues, and luminance testing. However, certain unique comments (such as concerns regarding vehicle loading procedure, rearview mirror positioning, etc.) were discussed during the technical workshop. These issues will be identified and responded to in conjunction with the written comments in the sections that follow.

The participants in the public hearing included KidsAndCars.org, the National Consumers League, the Consumers Union, Sense Technologies, Annabelle's Angels, the Advocates, the Consumer Federation of America, and family members of victims of backover crashes including the Auriemma, Ivison, Dahlen, Gridley, Gulbransen, Nelson, and Anthony families. The participants in the public hearing expressed general support for the proposed rule. In addition to reiterating some of the technical comments that the advocacy groups submitted on the NPRM, participants in the public hearing generally underscored the high non-economic and human cost that is associated with backover incidents. KidsAndCars.org noted that in 70 percent of the cases that they have compiled, the child victim was a direct relative of the driver. Mr. Patrick Ivison, a 16 year old who was a victim of a backover crash as a toddler, also testified to the many challenges that he faces by living with the lifelong injuries that he suffered. Participants also noted other unquantifiable costs such as parents who commit suicide when they are unable to forgive themselves for their involvement in a backover crash.

The families of victims cited the inability of drivers to see behind vehicles as an important danger. Many of their cases involved drivers who had walked around the rear of the vehicle or had been present at the rear of the vehicle shortly before entering the vehicle and beginning the reverse maneuver. The Consumers Union also noted observational evidence that children often walk along the rear bumpers of vehicles as they travel to the other side of the vehicle. In general, the participants in the public hearing refuted the idea that victims of backover incidents are limited to irresponsible parents or caretakers.

g. Additional 2012 Research

As described above, the agency conducted additional research and analysis covering a wider range of driver and an additional vehicle type. Specifically, the additional testing parameters examined whether variations in driver and vehicle type would have any impacts on NHTSA's estimates regarding drivers' use of backing aid technologies to avoid backover crashes.

Research Design—Wider Range of Vehicle Types and Drivers

In order to examine whether variations in driver and vehicle type would have any unanticipated impacts on NHTSA's estimates, the agency conducted additional testing utilizing a sedan. Further, the agency sought to more closely balance the ratio of male and female participants in this latest study and include a broader age range among the study participants.

In terms of vehicle type, NHTSA's previous studies had focused on minivans and crossover utility vehicles to examine drivers' use of backing aid technologies. While we acknowledge that vehicles have different blind zones (and that this would intuitively have an impact on the backover crash risk), the agency believes that our previous

[43] 76 FR 11417.

research evaluating human behavior using a single vehicle can be applied across the vehicle fleet. We believe this is appropriate because the data show that virtually all vehicles have a blind zone that covers at least the area directly behind the vehicle where our Monte Carlo simulation suggested that backover crash risk is the highest. Thus, the agency's previous studies, for example utilizing the Honda Odyssey to examine effectiveness in avoiding backover crashes, should approximate the vast majority of vehicles on the road.

However, the agency decided to conduct an additional study using a midsized sedan (the Nissan Altima). We note that the choices of vehicle type for testing were constrained to vehicles that had significant numbers of drivers both with and without cameras. Thus, we were unable to test vehicles at the extremes for large or small blind zone sizes. However, we reasoned that while drivers of a smaller vehicle may not have an actual improved view of the what the Monte Carlo simulation indicates would be relevant area behind the vehicle, as compared to a minivan or SUV, it may be possible that their behavior can be different due to drivers' own *perception* of the size of the vehicle blind zone. Thus, additional testing was designed to ensure that this factor would not have any unanticipated effects on NHTSA's estimates on the ability of drivers to use backing aid technologies to avoid backover crashes.

In terms of driver demographics, the agency more closely balanced the ratio of male and female participants in the 2012 study. Further, the agency sought to include a broader age range among the study participants (earlier studies had participants between the ages of 25 and 55). The agency believes that the participants in NHTSA's earlier studies can approximate the performance of drivers involved in backover crashes because (when faced with a potential backover crash situation) all drivers are unable to see the relevant areas behind the vehicle with the greatest crash risk. Further, we assumed that different characteristics between various driver demographics (such as age or gender) would not affect drivers' use of backing aid systems. However, the agency decided to examine further this assumption as well. While all drivers would have the same opportunity to view a pedestrian using a rearview video system, NHTSA decided to include participants with a broader set of driver demographic characteristics to see whether or not the inclusion of these drivers would lead to a statistically different result due to potential unforeseen factors (e.g., comfort level with the system). Thus, NHTSA's 2012 research included drivers of broader age and gender characteristics.

Research Design—New Test Object Presentation (Laterally Moving Test Object)

In addition to examining a different type of vehicle and a wider range of drivers, the agency also had the opportunity to examine how drivers would react to a different obstacle presentation method. Through this test, the agency sought to determine if a different test object presentation could have any unanticipated effects on the agency's estimates of the driver's ability to use backing aid technologies to avoid backover crashes. Thus, separately, the new research also included a different backover test where the test object laterally moved into the vehicle's backing path from the passenger side of the vehicle (in addition to utilizing the original test object presentation method where the test object would pop-up behind the vehicle).

As the intent of these studies was to isolate the ability of the driver to use the backing aid technology to avoid a backover crash with a test object that is otherwise unseen and unanticipated, the agency designed its previous tests to utilize a pop-up test object presentation.[44] Because the agency is aware that many cases involve drivers who walked around their vehicles before getting into the vehicle and starting a backing maneuver, we designed this pop-up test method to represent the surprise presence of the pedestrian—including the pedestrian's movement into the vehicle's backing path. The pop-up presentation method is a reasonable representation of a person that is either not visible to the driver using the standard vehicle equipment (for the duration of the backing maneuver), or visible to the driver using the same equipment (but was not observed by the driver). We believe that the pop-up presentation method is a reasonable estimate of these two conditions because the test object is presented to the test participant after he/she has begun the backing maneuver. In other words, the presentation of the test object is limited to the time after the test participant has checked his/her surroundings and decided that they could conduct a backing maneuver. As there is no evidence to suggest that any significant portion of the victims of backover crashes were a result of a driver intentionally backing over a pedestrian, the aforementioned two situations likely represent the vast majority of situations in which persons are injured or killed in backover crashes. We assume that a driver who has observed a person moving behind the vehicle using rearview mirrors would attempt to stop immediately.

However, the agency is aware that backover crashes involve a wide variety of factors (e.g., the movement of the pedestrian, the time at which the vehicle's backing maneuver begins, the trajectory/speed of the vehicle, etc.). Thus, the agency's new research included a different obstacle presentation method to help determine whether the new obstacle presentation could have any unanticipated effects on the driver's ability to use the rearview video system. By maintaining consistency with the pop-up test object presentation method (e.g., in vehicle model, obstacle presentation time in the rearview video system, etc.), the agency designed a similarly reasonable test to approximate the surprise presence of a pedestrian (that measures the same crash situations as the pop-up presentation method).[45] In doing so, the agency sought to determine whether driver use of the rearview video system would be statistically different if the test object was presented in a fashion where it approached the vehicle laterally from the passenger side. Thus, the agency's 2012 research included the new presentation method where the test object enters the vehicle's backing path from the passenger side in addition to the original pop-up test object presentation method.

Summary of Research Test Conditions

For those aforementioned reasons, the agency tested three different conditions as outlined in Table 10, below. In all test conditions for the 2012 research, the agency used the Nissan Altima (a midsized sedan) as the test vehicle. Further, the agency closely balanced the ratio of male and female participants and included drivers above age 18.

[44] The test presented the pop-up test object only after the driver had backed the vehicle a specified distance. In other words, the driver began his backing maneuver before the test object appeared.

[45] Further information on the test parameters are available in the research report (Rearview Video System Use by Drivers of a Sedan in an Unexpected Obstacle Event). This report is available in Docket No. NHTSA–2010–0162–0253.

Table 10. Conditions Tested in 2012 Study on Drivers' Use of Backing Aid Technologies.

		OBSTACLE PRESENTATION	
		Pop-up object, centered, 14 ft. aft	Moving object
SYSTEM	Baseline (No System)	***No Test*** (Assume 100% crashes)[46]	***Test***
	Rearview Video	***Test***	***Test***

Research Results

The test conditions described above can be used to answer two questions. The first is whether or not (using the same pop-up test object presentation method) the new drivers and vehicle type (more balanced gender distribution, the different vehicle type, and the broader age range) would contribute to a result that was statistically different. The second is whether or not (using similar driver demographic characteristics and the same vehicle) the different test object presentation method (moving test object versus pop-up test object) would produce a statistically different result.

After completing 143 tests using the three aforementioned test conditions, the agency obtained the following results:

Table 11. Test Results from 2012 Study on Drivers' Use of Backing Aid Technologies.

		Nissan Altima Tests OBSTACLE PRESENTATION			
		Pop-up object, centered, 14 ft aft		**Moving object**	
		# Tested	% Crashes	# Tested	% Crashes
SYSTEM	Baseline (No System)	N/A	(Assumed 100%)	56	91%
	Rearview Video	36	67%	51	69%
	TOTAL	36		107	

Among all of NHTSA's test conditions in the 2012 research (including both test object presentation methods), the rearview video system increased drivers' ability to avoid crashes with the test objects. In each of the cases, the difference between the baseline (no rear visibility system) condition and the rearview video system condition was statistically significant. In other words, all of the test data continue to show that rearview video systems have a statistically significant effect of improving the driver's ability to avoid a backover crash.

However, in spite of the aforementioned new test parameters (vehicle/driver types and obstacle presentation method) that were introduced into NHTSA's 2012 research, the results do not show that the new test parameters created statistically different results from NHTSA's previous studies.[47] When comparing the results of the Nissan Altima pop-up obstacle tests (with the additional driver demographic characteristics) to NHTSA's previous studies using the Honda Odyssey and the same test object presentation method, the results do not show that the inclusion of the different vehicle type and additional driver demographic characteristics led to a statistically different result.[48] Finally,

[46] The baseline (no system) test condition with a pop-up test object was not tested in NHTSA's 2012 research. As in NHTSA's previous studies, the pop-up test object is presented in the vehicle's blind zone and the driver does not have an opportunity to view the test object through the vehicle mirrors or direct vision. In NHTSA's previous studies, no driver was able to avoid a collision with the pop-up test object without the use of a rear visibility system. As the Nissan Altima blind zone also prevents the driver from seeing the area where the pop-up test object would deploy, drivers would likewise be unable to avoid a collision with the pop-up test object in the baseline test condition.

[47] While the agency's research included as many participants as time and resources permitted, the agency's new research parameters yielded lower, but not statistically different effectiveness estimates compared to its previous research. We acknowledge that testing additional participants may have enabled the agency to detect a statistical difference between these factors. However, the agency is not currently aware of any research that can indicate what this difference would be.

[48] *See* Docket No. NHTSA–2010–0162–0253, Rearview Video System Use by Drivers of a Sedan in an Unexpected Obstacle Scenario. While this comparison shows that the data does not indicate a statistically different result due to the combination of the new driver demographics and vehicle type, the data also does not indicate whether or not the individual driver or vehicle type factors could have yielded a statistically different result. We note that in a separate analysis of the data from NHTSA's previous studies using the

Continued

when comparing the results of the moving test object presentation method and the pop-up test object presentation method (utilizing the same vehicle and driver demographic characteristics), the results also did not show a statistical difference.[49]

h. Additional SCI Case Analysis

As described above, the agency began a new effort to identify and analyze SCI cases that involved vehicles with rearview video systems. The agency's intention was to examine any such cases available in order to better understand how the performance requirements proposed in the NPRM address the real world backover safety risk.[50]

Given the volume of comments received and the issues raised on those comments, the agency believed that SCI case analysis may indicate whether some of those concerns raised in the comments warrant further analysis. For example, in the NPRM, the agency proposed to test the 20-foot by 10-foot zone behind the vehicle using various test objects and the agency subsequently received various comments on whether testing using those test objects would ensure that the rearview video system would cover the areas behind the vehicle associated with the greatest backover crash risk. The agency reasoned, that an SCI case where a rearview video system was installed on the vehicle could offer additional insight into whether a crash happened under circumstances where a rearview video system covering the required portions of the test objects did not show the pedestrian behind the vehicle. After reviewing all the available cases prior to today's final rule, the agency identified two cases involving vehicles with rearview video systems.

- *Case No. DS11008:* In the first case, an elderly man driving a 2006 Prius (equipped with an OEM[51] rearview video system) struck an elderly woman in his driveway.[52] The technical report states that the elderly man was reversing the Prius along the driveway at a private residence when he struck an elderly woman standing in the driveway directly behind the vehicle. The driver stated that he did not remember whether he used any of the vehicle's mirrors or the vehicle's rearview video system but recalls looking straight ahead prior to the impact with the non-motorist. The driver stopped the vehicle after hearing yelling. The non-motorist sustained a contusion to the left knee and possible left rib fractures. She was transported to a local hospital several hours after the incident.
- *Case No. CR13011:* In the second case, a 30-year-old male driver of a 2010 BMW X5 (equipped with an OEM rearview video system) struck a non-motorist while reversing his vehicle in a parking lot.[53] The narrative in the report states that the non-motorist had stopped directly behind the vehicle because the non-motorist was distracted by flying birds. The driver selected the reverse gear (automatically activating the vehicle's rearview video system) and released his foot from the brake. The driver reapplied the brake as soon as he identified the non-motorist in the rearview image. However, the vehicle did not come to a complete stop before striking the non-motorist. The driver stated that when the vehicle is first started, the display (that is used to show the rearview image) has a boot sequence. The driver stated that he allowed the vehicle to begin reversing prior to the rearview image appearing in the vehicle display. The non-motorist sustained no significant injury and stood up unassisted after the incident. The non-motorist declined further medical treatment after being evaluated by paramedics.

While neither of these two cases provides conclusive data, the second (Case No. CR13011) seems to suggest that an important characteristic for rearview video systems intending to address the backover safety problem is the ability of the system to quickly show the rearview image. As shown by the facts leading up to the accident in Case No. CR13011, a rearview video system that is still initializing after the vehicle has begun reversing may not afford the driver enough time to identify a pedestrian behind the vehicle and avoid a backover crash.

Although the information in these two cases are useful, the agency does not believe that conducting further analysis between now and January 2, 2015 will substantially add to our understanding.[54] After examining all of the cases that the agency has investigated up to this point (only two of which involve vehicles with rearview video systems), it seems unlikely that many additional cases involving rearview video systems will be available for analysis by January 2, 2015. Given this expectation and the safety impact of further delay of today's final rule, the Department decided to complete the analysis of the available cases and report the results of the analysis at this time so that the Department could move forward with issuing today's final rule.

i. Updates to NCAP

As stated in the Department's letter to Congress establishing the January 2, 2015 deadline for issuing today's final rule, NHTSA would consider updating its New Car Assessment Program (NCAP) to include information about rearview video systems and recommend to consumers vehicle models with this important safety feature. While this

Honda Odyssey (where obstacle presentation, participant age, and vehicle type are all consistent) the male and female drivers did not crash with the test objects at statistically different rates.

[49] An analysis of the statistical significance of the difference between the pop-up and moving test object presentation methods is available in the research report titled ''Rearview Video System Use by Drivers of a Sedan in an Unexpected Obstacle Scenario.'' *See* Docket No. NHTSA–2010–0162–0253.

[50] The agency's SCI program conducts detailed investigations for specific crashes that fall under a variety of crash types that NHTSA has decided to research (e.g., backover crashes). As a part of this program, NASS reports to NHTSA any cases that fall under the crash types that NHTSA has identified when sampling police jurisdictions. In addition, SCI teams search the internet and other sources to help identify these cases. For this particular research effort, NHTSA specifically instructed the SCI program to identify cases from their respective sources of information that are backover crashes involving vehicles with rearview video systems. We also instructed the SCI program to conduct a search of any existing reported cases to identify whether any were backover crashes involving vehicles with rearview video systems.

[51] OEM refers to equipment that was originally installed on the vehicle as produced by the manufacturer.

[52] Case No. DS11008. The technical report is available at the SCI XML Case Viewer Web site (*http://www-nass.nhtsa.dot.gov/nass/sci/SearchForm.aspx*).

[53] Case No. CR13011. The technical report is available at the SCI Electronic Case Viewer Web site (*http://www-nass.nhtsa.dot.gov/BIN/logon.exe/airmislogon*).

[54] In addition to analyzing SCI cases with rearview video systems, the agency also considered analyzing rearview video systems currently installed in the vehicle fleet to see whether there was sufficient data to measure the real world impact of rearview video systems. The agency reasoned that it might be possible to measure this impact because: (1) The adoption of rearview video systems in new vehicle sales has been increasing substantially in recent years, and (2) the available testing data (coupled with the agency's difficulty in identifying SCI cases with rearview video systems) suggest that these systems would have a beneficial effect in reducing backover crashes. However, after analyzing the cumulative installation of rearview video systems in the vehicle fleet (i.e., identifying the number of vehicles currently on the roads that have these systems), the agency determined that too little data exist at this point in time to enable the agency to measure the current impact of rearview video systems on reducing backover injuries and fatalities. Our data on cumulative sales show that, in MY 2011, nearly 20% of passenger cars and light trucks were sold with a rearview video system. However, the total fleet (all vehicles currently operating on U.S. roads) with rearview video systems in 2011 was only 2.8%. Given the target population of this rule (210 fatalities and 15,000 injuries), we concluded that too little data exist at this time to make any conclusions about the impact of rearview video systems in reducing injuries and fatalities at this time. Further details about this analysis is available in the Final Regulatory Impact Analysis accompanying this rule in the docket referenced at the beginning of this document.

update to NCAP would be a separate agency consideration from today's final rule, we reasoned that it would be appropriate to consider updates to NCAP on this subject given the large amount of available information on backover crashes and their countermeasures that can be useful for consumers. Since then, NHTSA issued a request for comments to consider a plan for updating NCAP [55] and has issued a final decision notice to implement this change to the program [56] after considering the public comments.

In our final decision notice, the agency adopted a plan to update NCAP based on the request for comments and the public comments received. In essence, the agency decided to include rearview video systems as a ''Recommended Advanced Technology Feature'' [57] on the NCAP Web site (*www.safercar.gov*). As long as a vehicle model has a rearview video system meeting three performance criteria, *www.safercar.gov* will recognize the vehicle model a having a ''Recommended Advanced Technology Feature.'' The three performance criteria are based on the proposed field of view, image size, and response time requirements in the NPRM for this rulemaking. After considering the available information on the backover safety problem and the public comments, we determined that systems meeting these three criteria would be appropriate for ensuring that rearview video systems recommended by NCAP are systems that are suitable for assisting drivers in avoiding backover crashes.

While the agency took this action to update NCAP, we acknowledged (in both the request for comments and the final decision notice) that updating NCAP to incorporate recommendations for vehicle models with rearview video systems is not a substitute for the action taken by the agency in today's final rule. However, we believe that this update to NCAP (to include rearview video systems) is appropriate and complementary to the agency's actions in today's final rule for a few reasons. First, we believe that all the available research on rearview video systems shows that these systems are able to help drivers avoid backover crashes. Second, there is no reason for the agency to delay informing consumers about the backover safety risk and encouraging manufacturers to install these systems on their vehicle models to help consumers avoid these crashes. Third, we believe that consumers should have an easy way to identify vehicle models with rearview video systems and compare vehicle models based on their installation of ''Recommended Advanced Technology Features.'' Fourth, NCAP criteria also help to encourage manufacturers to develop rearview video systems in a way that addresses the backover safety problem (as opposed to developing these systems as merely parking convenience features). Fifth, even after the promulgation of today's final rule, we believe that the latest update to NCAP will continue to encourage manufacturers to install rearview video systems on their vehicles ahead of the full compliance date (i.e., during the phase-in period).

III. Final Rule and Response to Comments

a. Summary of the Final Rule

With a few notable exceptions, today's final rule adopts the performance requirements from the proposed rule in the NPRM. While also responding to concerns raised by commenters, today's rule adopts the following four requirements largely without change. First, this rule adopts the NPRM proposal that required manufacturers to install rear visibility systems that enable a driver to view an area encompassing 5 feet laterally (to each side) from the longitudinal centerline of the vehicle and extending 20 feet rearward of the vehicle's rear bumper. Second, it also defines the required field of view through the placement of seven test objects along the perimeter of the field of view. Third, the required portions of these test objects that must be seen remain unchanged from the NPRM. Fourth, today's final rule also adopts the image size requirements proposed in the NPRM and thus requires that the three furthest test objects be displayed at an average subtended angle of no less than 5 minutes of arc.

However, today's final rule has not adopted the same linger time and deactivation requirements as the NPRM. In response to the manufacturers' concerns that the linger time and deactivation restrictions in the proposed rule may preclude certain design features, today's final rule defines a backing event, which begins at the selection of reverse and ends when the vehicle's forward motion achieves either 10 mph, 10 meters, or 10 seconds in duration. Today's final rule linger time restriction allows rear visibility systems to remain activated until the end of the backing event. Further, today's rule does not preclude driver deactivation of the rearview image so long as the system defaults to the compliant field of view at the beginning of the backing event. By amending the linger time and deactivation restrictions in accordance with the backing event, today's final rule addresses both the agency's safety concerns and affords the manufacturers greater design flexibility.

While the response time requirement remains unchanged from the NPRM, today's final rule adopts a test procedure to establish the vehicle condition prior to testing. In their comments, manufacturers were concerned that the vehicle software initialization process could prevent a rear visibility system from achieving compliance when tested immediately after a vehicle is started. They contended in their comments that such a test condition would not be reflective of real world use of a rear visibility system. To alleviate these concerns and to more accurately simulate real world conditions, today's final rule establishes a test condition in which the vehicle would be placed into reverse not less than 4 seconds and no more than 6 seconds after the opening of the driver's door.

Today's final rule also adopts the durability performance requirements from the NPRM except today's rule applies those requirements on a component level instead of a vehicle level. While the commenters generally supported the agency's proposal of minimum performance requirements for humidity, corrosion, and temperature exposure, the commenters contended that these tests should be conducted on a component level as opposed to a vehicle level because the durability tests would present significant practical challenges if conducted on a vehicle level. As the agency believes that a component level test would be as effective in addressing our safety concerns as a vehicle level test, today's rule adopts the durability requirements from the NPRM on a component level.

Further, today's final rule makes a few important changes to the phase-in requirements. First, unlike the NPRM, today's rule requires that manufacturers comply with only the field of view

[55] 78 FR 38266.

[56] 78 FR 59866.

[57] On *www.safercar.gov,* NCAP gives recommendations to consumers about various advanced technologies that the data show are able to address major crash problems. The Web site offers comparative information on the vehicle models offered for sale in the United States and shows which of those models have ''Recommended Advanced Technology Features.'' However, beyond simply communicating to consumers that these vehicles have these technologies, identifying a system as a ''Recommended Advanced Technology Feature'' also communicates to consumers that the system meets certain minimum performance criteria (criteria that ensure that the system was designed as a safety system as opposed to, for example, a convenience feature).

requirement during the phase-in period, and requires that manufacturers comply with all provisions of today's final rule at the end of the 48-month phase-in period. In the NPRM, the agency conducted its cost/benefit analysis assuming that most currently available rear visibility systems were compliant or could be easily made compliant with all of the proposed requirements. Through the comment period, the agency learned that most current rear visibility systems do not meet all of the requirements set forth in today's final rule and could not be easily made compliant with all of the requirements established in today's final rule. While the agency believes that the requirements beyond the field of view are crucial in ensuring the quality of rear visibility systems in the long run, we have limited the phase-in schedule to be applicable only to the field of view requirement in order to avoid significantly increasing the costs of this rule by requiring that manufacturers conduct expensive equipment redesigns outside of the normal product cycle. In spite of this change, the agency does not expect the estimated benefits of this rule to be diminished during the phase-in period because the estimated benefits were based on research conducted using rear visibility systems which did not meet all the requirements established in today's final rule. However, the agency expects that this increased flexibility during the phase-in period will allow vehicle manufacturers to avoid incurring the significant costs associated with redesigning rear visibility systems outside of the normal product cycle and instead focus those resources on installing more rear visibility systems on a greater number of vehicles in the near term.

Second, today's final rule does not utilize separate phase-in schedules for passenger cars and other vehicles such as MPVs and trucks. As discussed later in this notice, we find that requiring separate phase-ins for different types of vehicles could increase compliance costs without leading to an increase in application of the rear visibility countermeasure. Third, in light of the additional flexibilities granted above, today's final rule does not adopt the carry-forward credit system proposed in the NPRM. Finally, although the percentage targets of the fleet to be equipped with the required rear visibility system remain unchanged for each year, today's final rule adjusts the phase-in schedule so that the schedule does not begin until May 1, 2014 (with the first year requiring compliance being May 1, 2016 to April 30, 2017).

Separately, today's final rule does not adopt the luminance requirements from the NPRM. The luminance requirements proposed in the NPRM have significant practical challenges at this time. It is not clear that the proposed requirements would provide the intended safety benefits as a luminance requirement alone may not afford a driver a clear image of the area directly behind the vehicle. As the agency is unaware of any other practicable method of ensuring a quality display of the area behind the vehicle without restricting reasonable technological options, today's final rule does not contain luminance requirements.

b. Applicability

The provisions of the K.T. Safety Act require a broad application of improved rear visibility countermeasures by defining the term ''motor vehicle'' as vehicles less than 10,000 pounds excluding only motorcycles and trailers. However, the K.T. Safety Act allows the flexibility to prescribe different requirements for different types of vehicles. Thus, in the ANPRM, the agency considered various characteristics of the vehicles covered under the K.T. Safety Act and requested public comment. Specifically, the agency examined the relative backover crash risks associated with trucks, MPVs, and vans. Further, it examined the possible association between blind zone size and relative crash risk.

The advocacy group and equipment manufacturer commenters on the ANPRM generally expressed support for universal applicability of rear visibility countermeasures to vehicles contemplated by the K.T. Safety Act. These commenters stated that widespread application affords the greatest level of protection and that the available data show that the backover crash problem is widely dispersed such that it should be applied to all vehicle types. On the other hand, vehicle manufacturers generally commented that the applicability of this rule should be limited to vehicles with the highest risk of backover crashes. Nissan and General Motors both recommended a maximum blind zone regulation to determine which vehicles require the rear visibility countermeasure. Mercedes specifically recommended that the agency limit the countermeasures to trucks, MPVs, and vans, should NHTSA find that those vehicles are overrepresented in the crash data.

Separately, Blue Bird suggested in its comments that smaller buses not be included in any potential rule. Blue Bird stated that these buses have not been involved in fatalities, that drivers of such buses are better trained because they have commercial licenses, and that this regulation would impose a disproportionate amount of costs on these vehicles since small buses do not generally have navigation systems. Conversely, Rosco commented that small buses are often used to transport children and should be covered in any potential rules.

After consideration of the comments on the ANPRM, NHTSA proposed in the NPRM to apply the rear visibility requirements to all vehicles with a GVWR of 10,000 pounds or less (excluding motorcycles and trailers). The agency reasoned that, to apply rear visibility requirements consistently to all the aforementioned vehicles would best address the backover safety risk and fulfill the intent of Congress in the K.T. Safety Act. In regards to the safety risk, the agency noted that backover incidents are not limited to any particular type of vehicle and that no vehicle type provides the driver with a sufficient rear view to avoid the types of backover crashes contemplated by Congress in the K.T. Safety Act. Speaking specifically of MPVs, trucks, and vans, the NPRM noted that these vehicle types are overrepresented in fatal crashes. However, passenger cars still contribute to backover crashes (resulting in either an injury or a fatality) at a rate that is similar to their proportion of the vehicle fleet. Thus, the agency did not believe it would be in the best interests of safety to limit the rearview countermeasure to certain vehicle types. Further, the NPRM did not include a minimum blind zone threshold to determine the applicability of rearview countermeasures. The data available to the agency showed a correlation between the size of the blind zone and backing incidents when a wide area behind the vehicle is considered. However, the data showed a weak relationship between blind zone size and backing incidents when considering the areas immediately behind the vehicle where the agency believes backover crashes are most likely to occur.[58]

While acknowledging the difficulties cited by Blue Bird, we proposed to include small buses under the proposed rule for similar reasons as described above. In the NPRM, we tentatively concluded that to exclude small buses

[58] We also did not see a correlation between blind zone size and *backover* accidents. In 2008 we conducted an analysis based on blind zones and crash data for 28 vehicles. We did not find a statistically significant correlation between blind zone and backover risk, but we have not studied this issue further since that time.

would be contrary to the intent of Congress in the K.T. Safety Act as the intent of Congress was to apply improved field of view requirements to all the vehicles covered by the K.T. Safety Act. The agency further noted that small buses are often involved in transporting children and do not afford a rear field of view which enables a driver to avoid the backing incidents contemplated by Congress.

While noting that commenters on the ANPRM did not comment on the issue of the applicability of this rule to low-speed vehicles, the agency proposed to include low-speed vehicles under the proposed rule. NHTSA stated in the NPRM that it could not determine, from the available data, whether or not low-speed vehicles have been involved in real world backover incidents. Thus, the NPRM sought data relating to the involvement of low-speed vehicles in rear world backover incidents.

Comments

In general, the comments that the agency received in response to the NPRM have reiterated the concerns put forward by the commenters on the ANPRM. Both the Advocates and Brigade commented that there should be no exclusion of any vehicles that are covered under the K.T. Safety Act. IIHS supported these sentiments specifically stating that sport utility vehicles should be subject to the improved rear visibility requirements of this rulemaking. The Advocates went on to assert that the lack of recorded case incidents should not preclude the agency from concluding that a vehicle type (such as school buses) presents a safety risk. The organization also contended that while the operational conditions of certain vehicles may have additional safeguards, it is possible that those conditions will change during the life of the vehicle. In the example of school buses, the Advocates noted that while school buses generally have operating procedures and experienced drivers to safeguard children; such buses can be re-purposed for different activities.

Conversely, different commenters expressed support for excluding certain types of vehicles from the requirements of this rulemaking. The School Bus Manufacturers Technical Council commented that school buses should be excluded from the rear visibility requirements. The organization asserted that current regulations already afford additional and adequate rear visibility requirements for school buses. Further, the organization reasoned that (1) school buses typically do not transport the most vulnerable population (0–5 year olds), (2) school children around school buses are normally supervised by adults, and (3) school bus drivers have more stringent commercial driver's license training. Without offering additional information, the Alliance commented that police vehicles should not be subject to the improved rear visibility requirements. Additionally, an individual commenter, Mr. Ben Montgomery conveyed in his comments that rearview video systems will add no improvement to rear visibility for low-speed vehicles and opined that to require additional rear visibility for low-speed vehicles would be excessive. Finally, Porsche asserted that passenger cars should be addressed in a separate rulemaking, as passenger cars (especially smaller vehicles) have different visibility needs. It contended that NHTSA should not take a ''one-size fits all'' approach to improving rear visibility.

Further, while the NPRM did not include a provision for determining applicability of this rule based on a vehicle blind zone threshold, IIHS continued to express concern regarding the large blind zones that can exist on some vehicle models. The organization stated that NHTSA should regulate the size of vehicle blind spots because manufacturers should be precluded from making design choices which create unusually large blind zones.

Finally, the agency received comments from individuals requesting that today's final rule apply to vehicles not contemplated by the K.T. Safety Act. Specifically, various individual commenters suggested that trailers, garbage trucks, and other vehicles with a GVWR greater than 10,000 pounds often have even larger blind zones than the vehicles included in this rulemaking and should be covered by today's final rule.

Agency Response

For the reasons that we noted in the NPRM, today's final rule applies to all vehicles with a GVWR of 10,000 pounds or less, except for motorcycles and trailers, as was contemplated in the K.T. Safety Act. It continues to be the position of this agency that the K.T. Safety Act requires that today's final rule expand rear visibility requirements for all vehicles covered by the Act. In addition, the agency believes that there are compelling safety reasons for applying the rear visibility requirements of today's final rule to all the aforementioned vehicles. While many commenters contended that the requirements of today's final rule should apply differently to different vehicle types, the available data do not support such a contention. As discussed above, backover crashes are not limited to any particular type of vehicle and the agency is not aware of any vehicle type that categorically provides the driver with a sufficient rear field of view so as to avoid the types of backover incidents contemplated by Congress in the K.T. Safety Act.[59] Thus, in addition to the constraints placed on the agency by the K.T. Safety Act, the agency does not believe it is appropriate to apply the requirements of today's final rule based on vehicle type.

While we agree with the aforementioned commenters that school buses and police vehicles may have unique operating conditions, such as more stringent driver training, we do not believe that such operating conditions sufficiently compensate for the fact that drivers of these vehicles simply do not have access to a field of view that would enable them to avoid backover crashes. We note that school buses and police vehicles often operate in residential areas and can have significant exposure to young children and the elderly.

Further, we note that the latest agency research indicate that low-speed vehicle blind zones vary greatly within this vehicle class. Some also contain significant blind zones similar to other passenger cars and light trucks. However, some others may have very small blind zones.[60] As low-speed vehicles may have a GVWR of up to 3,000 lbs., these vehicles are also fully capable of causing injury and death to vulnerable pedestrians.[61] As backover crashes do not typically occur at speeds above 25 mph (the top speed of low-speed vehicles), we believe it is appropriate to include low-speed vehicles in today's final rule. Further, the agency requested comment on low-speed vehicles in the NPRM and sought information as to whether the agency could reasonably conclude that low-speed vehicles present no unreasonable risk of backover crashes, but no

[59] The rule requires rearview video systems in all covered vehicles, regardless of whether a driver of a particular vehicle has full view of the zone behind the vehicle by looking directly out of the rear of the vehicle or by looking in rearview or side mirrors. As discussed below, the agency is aware of one LSV where this may be the case. Manufacturers of other types of vehicles who believe the blind zone of their particular vehicle is designed so as to enable drivers to avoid backover crashes without a rear visibility system are also able to petition the agency as described in that section.

[60] *See* Mazzae, E. N. (2013), Direct Rear Visibility Measurement Data: 2010–11 Passenger Cars and 2008–2010 Low-Speed Vehicles, National Highway Traffic Safety Administration, *available at* Docket No. NHTSA–2010–0162–0252.

[61] However, as we mentioned in the NPRM, the agency is not aware of any backover crash involving a low-speed vehicle. Our information, at this point in time, continues to be the same.

commenter provided any substantive information on this point. Therefore, the agency cannot reasonably exclude, as a category, low-speed vehicles from the requirements of today's rule because the available information suggests that the visibility needs of these vehicles vary widely within the vehicle class.[62]

As mentioned in the NPRM, we also decline to separate passenger cars from this rulemaking. While we acknowledge that smaller passenger cars have different visibility needs from large MPVs and trucks, the data show that a large and significant portion of backover crashes are attributable to passenger cars. Further, the data indicate a positive, but not statistically robust, relationship between the size of the blind zone of a given passenger vehicle and the likelihood that it may be involved in a backing crash (i.e., all types of reverse crashes).[63] In addition, the areas immediately behind the vehicle, which are covered by the blind zone of virtually all vehicles, are the areas that the Monte Carlo simulation indicates are associated with the highest backover crash risk (risk of crashes in the reverse direction with pedestrians or cyclists). Thus, today's final rule applies equally to all vehicles with a GVWR of 10,000 pounds or less (regardless of the size of the vehicle's blindzone), except for motorcycles and trailers.

However, we decline to regulate the size of vehicle blind zones (independently from determining the applicability of rearview countermeasures) in this rulemaking as suggested by the IIHS. While blind zone sizes were researched and explored in this rulemaking, this was done as a possible approach in which the agency could determine whether certain vehicle types should be required to have different rear visibility countermeasures. As regulating the size of the blind zone (independent of the purpose of detecting pedestrians immediately behind the vehicle) was never explored in this rulemaking process, we decline to include such a requirement in today's final rule.

Finally, we also decline to extend today's final rule to cover trailers, garbage trucks, and other vehicles not contemplated by the K.T. Safety Act. While we acknowledge that many of these vehicles may also have significant blind zones, we have concentrated our research and rulemaking efforts on the vehicles mandated by Congress. We believe that, by focusing on the vehicles types covered in the K.T. Safety Act, this rulemaking is able to more appropriately address the types of crashes that Congress sought to avoid. To include and accommodate vehicles with a GVWR of 10,000 lbs or more (many of which are used for commercial purposes), the agency may be required to utilize a significantly different approach with different requirements and test procedures that may not be as closely tailored to avoiding the types of crashes contemplated by the K.T. Safety Act. Further, we note that backover crashes involving vehicles with a GVWR less than 10,000 lbs represent a significant majority of both fatalities and injuries. As this rulemaking has continuously focused exclusively on vehicles covered by the K.T. Safety Act, to introduce requirements regarding other vehicles in today's final rule would raise questions regarding the sufficiency of the scope of notice of this rulemaking. Thus, today's final rule declines to introduce such requirements at this time.

c. Alternative Countermeasures

The provisions of the K.T. Safety Act require this rulemaking to expand the required field of view in order to enable drivers to detect areas behind the motor vehicle in order to reduce death and injuries resulting from backing incidents. Congress emphasized that the objectives of the K.T. Safety Act may be met through the provision of technologies such as additional mirrors, sensors, and cameras. In the NPRM, the agency understood Congress' intent as not to require that a driver literally *see* a rearview image because such a reading would render the aforementioned reference to sensors in the text of the K.T. Safety Act superfluous—thereby violating a basic canon of statutory interpretation. Accordingly, NHTSA has conducted research into the effectiveness of each of the suggested countermeasure technologies, reported its findings in both the ANPRM and NPRM, and has received comments in response to both notices.

The agency has consistently noted that a successful rear visibility countermeasure must not only accurately detect objects behind the vehicle, but must also induce sufficient braking so as to avoid the crash. In the ANPRM, we examined the results noting the ongoing efforts of various studies intended to evaluate the effectiveness of mirror, sensor, and rearview video countermeasure systems. We outlined our observations which indicated that rear-mounted convex mirrors generally have a field of view of approximately 6 feet radially from the location of the mirror and significantly distort the image of the reflected objects.[64] Further, while cross-view mirrors offer a greater range of view, they do not enable a driver to detect areas directly behind the vehicle.[65] With regard to sensor systems, we noted that while commercially available systems have been designed as parking aids as opposed to safety devices, they have inconsistent performance for detecting small children.[66] Further, the ANPRM cited a General Motors-sponsored study[67] which indicated that sensor warnings generally failed to induce drivers to brake with sufficient force to avoid a backover crash. We also noted

[62] The agency also considered offering an alternative compliance option for certain low-speed vehicles, based on their direct view visibility. However, to adopt an alternative compliance option during the final rule stage would raise questions regarding the scope of notice. We note that various options are available to low-speed vehicle manufacturers who believe that their vehicles are designed so as to enable drivers to avoid backover crashes without a rear visibility system. Such manufacturers may petition for a temporary exemption under 49 CFR Part 555 if they can demonstrate that their vehicle design is as safe as vehicles complying with the standard. They may also petition the agency for rulemaking to afford such vehicles (offering an equivalent level of safety) an additional compliance option in FMVSS No. 111. (*See* Section III. c. Alternative Countermeasures, below, for further information on petitioning the agency for further rulemaking). Finally, we note that the phase-in schedule adopted by today's final rule is unlikely to require any low-speed vehicles to comply with today's final rule until the final 100% compliance date in 2018.

[63] As the crash data is more scarce for *backover* crashes, most of our research has focused on the relationship between blind zones and backing crashes (rather than the relationship between blind zones and *backover* crashes). NHTSA performed two analyses of the relationship between rear blind zone size and backing crash incidence. The first used human-measured rear visibility data and is reported in detail in the docketed 2008 NHTSA report ''Rear Visibility and Backing Risk in Crashes'' (Docket No. NHTSA–2009–0041–0003). The second, subsequent analysis used vehicle rear visibility data acquired using a laser-based visibility measurement technique and is summarized in the 2009 NHTSA report ''Rear Visibility Measured by Laser Light Beam Simulation of Driver Sight Line Compared to Backing Risk in Crashes'' (Docket No. NHTSA–2009–0041–0053). These studies estimated backing crash risk from police-reported crashes in the State Data System and compared this risk to the rear-visibility measurements. Simple correlations and logistic regression analysis suggested an association between the risk of a backing crash and the blind zone measured over a extremely wide area (50–60 feet in width by 50 feet longitudinal distance). However, the results were significantly weaker for blind zones measured in areas that we believe a driver would be using for a typical backing maneuver and for the longitudinal sight distance. NHTSA's also examined the relationship between blind zone size and backover crashes in 2008 and did not find a relationship. That study compared the 28 vehicles with available crash data and the agency has not updated the study since.

[64] 75 FR 76197.

[65] *Id.*

[66] 75 FR 76198.

[67] 74 FR 9495; Green, C. and Deering, R. (2006). Driver Performance Research Regarding Systems for Use While Backing. Society of Automotive Engineers, Paper No. 2006–01–1982.

in the ANPRM that our research indicated that drivers equipped with both rearview video systems and sensor systems seemed to avoid obstacles less successfully than drivers equipped with video-only systems.[68] We conjectured that drivers may have looked at the video system less when also equipped with a sensor system, but we requested public comment on possible reasons for this observed trend.

Several commenters on the ANPRM, including the Consumers Union, KidsAndCars.org, IIHS, Blue Bird, Magna, and Nissan stated that rear mounted mirror systems are generally not adequate for avoiding the backover crashes contemplated by Congress in the K.T. Safety Act. Several other commenters, including the Alliance and Mercedes, suggested that adopting the ECE R.46 regulation would help to prevent a substantial number of backover crashes. They reasoned that the ECE R.46 regulation, which allows for convex driver side view mirrors (as opposed to the current FMVSS No. 111 requirement of a planar driver side view mirror), would afford drivers additional time to avoid backover crashes which involve pedestrians moving into the vehicle's reversing path from the side.

Further, multiple commenters on the ANPRM, such as Delphi and Ackton, suggested that NHTSA's research may have underestimated the effectiveness of sensor systems as the available sensor systems were designed as parking aids and not for the purpose of detecting objects such as pedestrians. Other commenters such as Magna and Continental suggested that future applications of sensor technologies such as infrared systems and sensor-initiated automatic braking were in active development and would yield greater accuracy and effectiveness for sensor countermeasure technologies. Conversely, commenters such as IIHS noted that drivers' slow and inconsistent reactions to sensor warnings should preclude NHTSA from requiring or allowing sensors in lieu of rearview video systems.

After the ANPRM, the agency conducted additional research in order to better determine the effectiveness of each countermeasure. Our additional research after the ANPRM indicated that drivers utilizing either the rear-mounted convex mirrors or the cross-view mirror systems were unable to avoid the unexpected obstacles that were presented during the test.[69] Further, the same study found that even in tests with consistent (100%) object detection by the vehicle sensors, drivers reacted to the sensor warning in a way that avoided the backover crash in only 18 percent of the tests.[70] Similar to the results of the General Motors study noted in the ANPRM, our research, including a 2010 study, found that sensor warnings tended to induce drivers to apply some measure of braking or stop momentarily, but did not induce drivers to come to a complete stop so as to avoid the backover crash.[71]

Given this additional research and the comments on the ANPRM, the agency stated in the NPRM that rearview video systems are the most effective, currently available technology in aiding drivers to avoid the backover crashes contemplated by Congress in the K.T. Safety Act. Thus, the NPRM tentatively concluded that drivers need to have access to a visual image of an area measuring 5 feet to either side of the vehicle centerline and extending 20 feet behind the vehicle's rear bumper in order to successfully avoid a backover crash. However, conscious of the potential for new technologies and differing approaches to providing the driver with the required field of view, the proposed rule did not preclude the additional use of mirrors and/or sensors to complement a system producing the required field of view.

Comments

Several equipment manufacturer comments disputed the agency's conclusion in the NPRM that a rearview image is necessary in order to enable a driver to effectively avoid a backover crash. Such commenters contended, for various reasons, that the rear visibility requirements should not preclude systems that do not provide a rearview image. For example, Sense Technologies noted that the research completed by NHTSA did not accurately evaluate the effectiveness of sensor and mirror systems. In terms of sensors, Sense Technologies noted that NHTSA's studies utilized ultrasonic sensors instead of Doppler sensors (which it asserted are more reliable). Sense Technologies asserted that Doppler radar-based systems should have been considered and that visual warnings should supplement—and not replace—auditory warnings. In regard to mirrors, Sense Technologies noted that cross-view mirrors are intended to be utilized in conjunction with a sensor or a rearview video system and their effectiveness should not have been evaluated based on testing as a stand-alone product. It further advocated that cross-view mirrors are more effective at detecting pedestrians that move laterally into the vehicle's blind zone.

Other equipment manufacturers expressed similar concerns by stating that the final rule should not preclude systems that do not provide a rearview image. Valeo supported this sentiment by arguing that manufacturers should be able to choose which system or combination of systems is best suited to achieve the goal of preventing backovers. Similarly, Rearscope commented that the requirements should permit the consumer to choose the technology or combinations of technologies that would be suitable. Rearscope also contended that these technologies must be further researched and that rulemaking should be delayed until this research can be completed. Finally, IFM Electronic also stated that the final rule should not preclude a system that does not provide a rearview image such as its 3D Photonic Mixer Device, which it claimed will be more effective than the ''2D'' rearview image required under the proposed rule.

On the other hand, some equipment manufacturers expressed support for the NPRM's conclusion that a rearview image is necessary to enable drivers to effectively avoid backover crashes.

[68] 74 FR 9496.

[69] 75 FR 76222–23. In its 2005 NPRM proposing to require straight trucks with a gross vehicle weight rating (GVWR) of between 4,536 kilograms (10,000 pounds) and 11,793 kilograms (26,000 pounds) to be equipped with a rear object detection system, the agency had tentatively estimated the effectiveness of mirrors using a 1984 pilot study by Federal Express that purported to show a 33% effectiveness estimate for its trained drivers using backing mirror systems. *See* 70 FR 53753. While the agency cited these values in a previous notice, the pilot study results were never made available for public review and therefore could not be evaluated during the research for this rulemaking. Thus, we have utilized the data from the agency's research which show that drivers utilizing rear-mounted convex mirrors or the cross-view mirror systems were unable to avoid the unexpected obstacles that were presented during the test.

[70] While the NPRM (at 75 FR 76223) stated that drivers avoided the staged backover crash test objects only 7 percent of the time (as opposed to 18 percent), the NPRM data did not include results from the study where NHTSA conducted a similar controlled backover experiment to see if drivers would react better to rear visibility countermeasures in a setting where they expected the presence of children (the study was conducted in a day care parking lot). The NPRM referenced this study (at 75 FR 76226) and indicated that this study would be placed into the docket. Further, the agency docketed the results from this study on December 3, 2010 (Docket No. NHTSA–2010–0162–0001)—shortly before the publication of the NPRM. However, as NHTSA was unable to include the results from the day care study at that time, we have included those results in our analysis for today's final rule. We have included these results in our analysis. For further information, please reference Docket No. NHTSA–2010–0162–0001 and the Final Regulatory Impact Analysis prepared in support of this rule (available in the docket number referenced at the beginning of this document).

[71] *See* Docket No. NHTSA–2010–0162–0001, Drivers' Use of Rearview Video and Sensor-Based Backing Aid Systems in a Non-Laboratory Setting.

Brigade agreed that sensors do not provide adequate protection because the commercially available systems do not detect small children reliably and that if a single system must be chosen, it should be a video system. Magna also agreed that sensors alone are ineffective by stating that ultrasonic waves do not travel through dry air with sufficient speed so as to react quickly enough to a moving object behind the vehicle. However, both of these commenters expressed support for combination sensor and video systems as a possibility for providing increased protection to pedestrians.

Other commenters on the NPRM also expressed support for combination sensor and video systems. For example, the Consumers Union commented that audible cues would be useful to prompt the driver to look at the rearview image when an obstacle is detected. Similarly, the Automotive Occupant Restraints Council asserted that a combination system can compensate for the fact that the driver cannot be looking at a rearview image and looking backwards at the same time. While noting support for combination systems, Rosco agreed with the proposed rule that the final rule should not require specific additional equipment beyond the rearview image. Rosco contended that this will afford manufacturers the flexibility to utilize additional driver aids as required by different market segments. In its comments, Gentex cautioned against concluding that combination systems would be inferior to video-only systems as studies have not been conducted on combination systems involving a rearview mirror-mounted display.

Separately, several commenters stated that the final rule should not preclude future technologies that may develop and instead should encourage the development of advanced rear visibility systems. Delphi and MEMA suggested that an NCAP-type system be established to encourage the development of new rear visibility technologies. In addition, Continental and BMW expressed concern that the proposal would inhibit technologies such as thermal imaging and automatic pedestrian detection with automatic braking.

Separately, some commenters expressed support for a system which would activate the vehicle brakes automatically upon detecting a pedestrian. The Automotive Occupant Restraints Council suggested in its comments that a rear visibility system would be more effective if the electronic stability control system would intervene to prevent the driver from a backover crash if the system detects that such a crash is imminent. IFM also suggested that a vehicle should automatically intervene to stop the vehicle when a backover crash is imminent regardless of whether the vehicle utilizes a sensor or a visual system.

Finally, Ford continued to express the opinion that NHTSA should consider alternatives for passenger cars such as adopting the ECE R.46 requirements for side view mirrors. Further, Brigade generally suggested in its comments that there would be a great advantage in harmonizing the requirements of this rulemaking with those of ECE R.46.

Agency Response

We acknowledge that some commenters disagreed with our tentative conclusion in the NPRM regarding the current need for providing a visual image of the area immediately behind the vehicle. However, we continue to believe, based on the types of currently available technology, the weight of the research, our consideration of the public comments, and other available information, that systems affording drivers the ability to see the area behind their vehicles are the most effective way of achieving Congress' goal of reducing backover crashes. The technology used to achieve that goal must not only detect the pedestrian behind the vehicle, but also effectively influence the driver to stop his or her backing maneuver. The agency continues to believe that in order to identify an effective technology for reducing backover crashes one must evaluate not only system performance, but also driver performance when assessing the overall effectiveness of a backover crash countermeasure. When taking these considerations into account, the data show that systems (such as sensor-only systems) that do not afford drivers a view of the area behind the vehicle do not effectively assist drivers in avoiding the backover crashes contemplated by Congress in the K.T. Safety Act.

Ultrasonic Sensor Systems Do Not Effectively Assist Drivers in Avoiding Backover Crashes

To be effective, a sensor-only system that does not afford the driver a view of the area behind the vehicle must reliably detect the presence of a person, detect a person at a sufficient distance, and drivers must react appropriately to avoid the crash.[72] A sufficient distance means a distance greater than the distance that a vehicle travels between the time when the person first enters within the detection zone of the sensors and the time when the driver brings the vehicle to a halt. Reliable detection means that the system must issue a warning to the driver when a person, regardless of size or orientation, is located within the detection zone of the sensor system. Appropriate driver response means that the driver heeds the warning of the system and reacts so as to avoid the crash.

Ultrasonic sensor systems are the most common type of sensor system found in automotive applications. However, through its research, the agency has found various significant limitations on the ability of these systems to perform sufficiently in the three aforementioned areas. First, the available data indicate that the ability of sensor-only systems to detect reliably an object that is within its design range varies significantly depending on the material and the surface area of the object. In the static tests run in NHTSA's 2006 sensor study,[73] the agency conducted tests of sensor-only systems using test objects that were easily detected by those systems (e.g., a 36-inch traffic cone and a 40-inch PVC pole) to determine the extent of the ultrasonic sensor detection range. The sensors generally detected the objects at a range between 5 and 8 feet.[74] However, the performance of the ultrasonic sensor systems deteriorated significantly when the agency tested objects that were smaller (i.e., had less surface area) and/or did not reflect sensor signals as well. In the agency's research, 1 and 3-year-old children (and Anthropomorphic Dummies) were detected poorly by the sensors.[75] A

[72] These three requirements closely follow the three factors considered in the Final Regulatory Impact Analysis: Crash avoidability (F_A), system detection reliability (F_S), and driver use of the system (F_{DR})—discussed further in Section IV. *Estimated Costs and Benefits, infra.*

[73] Mazzae, E.N., Garrott, W.R., (2006) Experimental Evaluation of the Performance of Available Backover Prevention Technologies. National Highway Traffic Safety Administration, DOT HS 810 634.

[74] We believe that these objects illustrate the design detection range of the sensor systems as they are objects that can be easily detected by these systems and were the objects that were most consistently detected at the greatest range in our testing. The only system that could detect beyond 5–8 feet was the Lincoln Navigator system which utilized two ultrasonic sensors and a radar sensor. Our general observations of this setup indicate that, while the radar sensor on the Navigator had a significantly greater range that the ultrasonic sensors, it also was significantly less consistent in detecting across its detection area than the ultrasonic sensors.

[75] NHTSA's 2006 sensor study tested 1 and 3 year old Anthropomorphic Dummies (ATDs) (29.4 inches and 37.2 inches in height, respectively) dressed in clothing. The study found that these ATDs were inconsistently detected by some systems

shorter traffic cone, with better reflectivity than the children and child-like objects, was detected significantly better by all tested systems.[76] On the other hand, although the adult test objects have similar material qualities to the children, despite also having poor reflectivity, detection was better because they have greater surface area when compared to children.[77] Thus, the data indicate the ultrasonic sensors are less able to detect children within their design detection zone as children generally do not reflect sensor signals as well as the test objects in the 2006 study and children generally do not have a large surface area to compensate for poor sensor signal reflectivity.

Second, the ability of ultrasonic sensor systems to reliably detect an object that is within its design range also varies significantly depending on the height/orientation of the object. Regardless of the surface area or reflectivity of an object, an object may be imperceptible to the ultrasonic sensor system if it is too close to the ground. For example, even though an adult that is lying on the floor has a large surface area to compensate for poor reflectivity, the data show that he/she will not be detected in this situation because the ultrasonic sensor systems have not been mounted/programmed so as to detect objects close to the ground. While the aforementioned 36-inch traffic cone was reliably detected up to a distance of between 5 and 8 feet in the 2006 sensor study, the same systems in that study were virtually unable to detect the 12-inch traffic cone (which had the same general material and composition as the 36-inch traffic cone).[78] One of the systems improved with detecting the 18-inch traffic cone.[79] However, systems were generally not able to match the detection zone of the 36-inch traffic cone until the traffic cone height was increased to at least 28 inches.[80] Thus, even though sensor systems tested by NHTSA had a design detect range extended up to between 5 and 8 feet, the above data demonstrate that there can be considerable areas where objects are not detectable within this design detection range when considering shorter test objects or certain object orientations.[81]

Third, even if the object is easily detected by the sensors, the design detection range of the ultrasonic sensor systems is generally not sufficient to enable a driver to avoid a backing crash. Although the data show that ultrasonic sensors detect adults up to between 5–8 feet from the vehicle bumper, drivers backing at a speed greater than approximately 2.0 mph will be unlikely to avoid the crash.[82] The data show that, it would take between 4.7 to 6.4 feet to stop the vehicle from 2.0 mph and 13.4 to 17.5 feet to stop the same vehicle from 5.0 mph.[83] Further, the available data suggest that most drivers conduct backing maneuvers at speeds greater than 2.0 mph.[84] Thus, in situations where the pedestrian enters the sensor design detection zone after the vehicle has started backing, it is unlikely that the driver will avoid the crash (even assuming perfect sensor detection and quick driver response).

Finally, our research continues to indicate that drivers tend not to react in a timely and sufficient manner in response to sensor warnings to avoid a backover crash with an unexpected pedestrian. In NHTSA's 2008, 2009, and 2010 studies on driver use of these systems, drivers only avoided collisions with the unseen test object using sensor systems in 18% of the cases despite the fact that the sensor system detected the object and warned the driver in all cases.[85] In both the NHTSA studies mentioned above and in a GM study referenced in the ANPRM,[86] many drivers responded to a sensor warning by exhibiting precautionary behavior (e.g., braking slightly or stopping the vehicle to check surroundings again). However, very few stopped fully to avoid the crash. In GM's study, 87% collided with the test object, but 68% of drivers exhibited precautionary behavior.[87] Thus, even when assuming that the driver is backing at a sufficiently low speed and that the sensor system detects the rear obstacle perfectly, drivers often do not react appropriately so as to avoid the crash when the obstacle is unexpected or unseen.

Thus, after considering the above data, the agency does not believe that ultrasonic sensor-based systems meet the need for safety (i.e., able to detect pedestrians and lead to a sufficient percentage of drivers avoiding the backover crash). These systems leave little room for driver error/indecision and poor system reliability with regard

when placed in locations close to the vehicle bumper and that all the tested systems could only detect the ATDs reliably up to a range between 2 and 6 feet. *See* Mazzae E.N., (2006) Experimental Evaluation of the Performance of Available Backover Prevention Technologies, *supra.* This study also found similar (but slightly worse in certain locations) results with real children aged 1 and 3 (30 inches and 40 inches tall, *See id.* respectively).

[76] NHTSA's 2006 sensor study found that a 28 inch traffic cone—slightly shorter than both the ATDs and the real children—could be detected up to a range of 5 to 8 feet. *See id.*

[77] The 2006 sensor study also found that an adult male was detected about as well as the idealized test objects (i.e., the system could detect the adult male up to a distance of between 5 and 8 feet rearward of the rear bumper). *See id.*

[78] Of the systems that detected the 12 inch cone, they were only able to do so at distances greater than 4 feet but no greater than 8 feet from the bumper. In other words, for short objects, even the best sensors systems had a significant zone between the vehicle's bumper and 4 feet from the bumper where the 12 inch traffic cone was undetectable. *See id.*

[79] *See id.*

[80] *See id.*

[81] The NHTSA 2006 sensor study also tested an adult male lying down parallel to the vehicle bumper at different locations. Detection by all systems was inconsistent and only one system could detect the adult close to the bumper. *See id.*

[82] For reference, the NHTSA 2006 sensor study measured the *idling* speed of the vehicles (i.e., speed when vehicle is in reverse and no brake or throttle is being applied) in the study. Of the vehicles utilized by NHTSA in that study, the idling speed ranged from 4.0 mph to 7.0 mph. This data suggest that vehicles traveling backward at an idle engine speed travel at speeds that can be double the 2.0 mph speed where drivers can be reasonably expected to bring a vehicle to stop within 5–6 feet. *See* Mazzae E.N., (2006) Experimental Evaluation of the Performance of Available Backover Prevention Technologies, *supra.*

[83] *See id.* The agency calculated these distances based on a start time that assumed the vehicle is already traveling at the given speed (2.0 mph or 5.0 mph). Then the calculation took into account driver reaction time (i.e., time it takes for driver to apply brakes after receiving a warning), sensor system detection response time (i.e., time between the presentation of the test object and the system warning signal), and brake application time (i.e., time between initiation of braking and maximum deceleration rate is reached). The agency further assumed that vehicles decreased speed at a constant rate (the maximum deceleration rate) once the initial brake application time had elapsed. Driver reaction time was 1.17 seconds. *See* Mazzae, E.N., Baldwin, G.H.S., Barickman, F.S., Forkenbrock, G.J. (2003) Examination of driver crash avoidance behavior using conventional and antilock brake systems, National Highway Traffic Safety Administration, DOT HS 809 561. Brake application time was assumed to be 0.25 seconds and system response time ranged from 0.18 to 0.74 seconds. *See* Mazzae E.N., (2006) Experimental Evaluation of the Performance of Available Backover Prevention Technologies, *supra.*

[84] In NHTSA's 2008 driver use study, drivers conducted backing maneuvers and at average speed of 2.26 mph and drivers' average *maximum* backing speed was 3.64 mph. *See* Mazzae, E.N., et al. (2008) On-Road Study of Drivers' Use of Rearview Video Systems (ORSDURVS), *supra.* A separate NHTSA study from 1995 also found similar results by observing that the average maximum backing speeds were generally 3.0 mph (when excluding the extended backing maneuvers that can be as fast as 11 mph). *See* Huey, R. Harpster, H., Lerner, N., (1995) Field Measurement of Naturalistic Backing Behavior. National Highway Traffic Safety Administration. DOT HS 808 532.

[85] *See* Mazzae, E.N., et al. (2008) On-Road Study of Drivers' Use of Rearview Video Systems (ORSDURVS), *supra, see also* Docket No. NHTSA–2010–0162–0001, Drivers' Use of Rearview Video and Sensor-Based Backing Aid Systems in a Non-Laboratory Setting. Drivers utilizing rearview video systems avoided the collision in 48% of the tests and drivers utilizing no countermeasure avoided the collision in 0% of the tests.

[86] *See* ANPRM, 74 FR 9495, *see also* Green, C. and Deering, R. (2006) Driver Performance Research Regarding Systems for Use While Backing, SAE Paper No. 2003–01–1982.

[87] *See id.*

to object detection. As shown above, these systems generally do not detect persons reliably in their detection zones. Their ability to detect humans can degrade significantly due to material composition (e.g., clothing), surface area, and height/orientation. Even assuming perfect detection, ultrasonic sensor systems do not have adequate range to assist drivers in avoiding crashes with pedestrians that appear in the sensor detection zone after the backing maneuver has begun. In addition, typical driver reactions to the sensor system warnings do not result in crashes being averted. These limitations lead the agency to conclude in today's final rule that sensor-only systems would not adequately address the backover crash problem that Congress directed NHTSA to address in the K.T. Safety Act.

Redesigning Ultrasonic Systems Is Unlikely To Improve Driver Performance

The agency is aware that many ultrasonic systems have been designed as parking aids (i.e., mounted at certain angles and programmed so that they pick up large objects as opposed to small children) and that certain adjustments to these systems may increase the likelihood that these systems will detect people and children. However, the potential solutions that the agency is aware of do not seem to adequately address the safety need in question in this rulemaking. Should the agency design a test procedure that addresses the concerns regarding poor detection of children, manufacturers may adjust the pitch of their sensors and sensitivity of their sensors to detect the agency's test objects designed to mimic children. However, in this scenario, the sensors would also detect curbs and other objects resulting in a greater number of false positives (i.e., issue alerts when no obstacle exists behind the vehicle) than they currently do when mounted so as to only detect large objects (such as a parked car). As mentioned above, the available research indicates that drivers generally do not react sufficiently to warnings regarding objects behind the vehicle when they cannot visually confirm the presence of an obstacle or when drivers do not expect the presence of an obstacle. The agency's concern that drivers do not trust the sensor warnings would be aggravated by the potential solutions to improve ultrasonic sensor performance (that would also increase false positives). Therefore, the agency does not believe that redesigning ultrasonic sensor systems is practicable at this time and would not help drivers avoid the types of backover crashes contemplated by Congress in the K.T. Safety Act.

Other Sensor-Only Systems Also Do Not Effectively Assist Drivers in Avoiding a Backover Crash

While the agency is aware of other sensor technologies and that there are potential future technologies that may perform better than ultrasonic sensors, the agency is not aware of any currently available sensor-only system that has demonstrated safety benefits that equal or exceed rearview video systems. For example, although radar systems have a longer detection range when compared to ultrasonic sensor systems, radar-based sensor systems exhibit similar tendencies to produce false positives as ultrasonic sensors (their ability to detect objects varies significantly based on the size, orientation, and composition of the object). Another example of an alternative sensor-only system is the Doppler radar systems suggested by Sense Technologies. While Doppler radar based systems can also detect at a greater range than ultrasonic sensors, the agency is not aware of any source of Doppler radar systems for automotive applications that presents a safety advantage over rearview video systems. To date, the agency is not aware of any OEM vehicle manufacturer that has elected to utilize Doppler radar systems on their vehicles. Further, the agency is aware of only one supplier that provides Doppler systems for automotive applications and it currently sells these systems for around $300 (an amount that exceeds the estimated costs of both rearview video and ultrasonic sensor-based systems).[88]

Further, the Doppler radar system presents various technical challenges that could also create safety concerns. First, the increased range of radar systems, including Doppler radar systems, can lead to an increase in false positives. Second, Doppler radar sensors rely on a change in relative speed in order for the object to be detected. This is a safety concern for the agency because this type of system would not warn the driver in a situation where a stationary pedestrian is located close to the bumper prior to the beginning of the backing maneuver. It will only warn the driver after the driver has begun accelerating into the pedestrian behind the vehicle. Given the short distance that can exist between the vehicle and the pedestrian, it is unlikely that the driver would be able to avoid a crash in these types of situations. Third, moving pedestrians can change direction and velocity. These changes in direction and velocity could affect the propensity of the Doppler radar to warn the driver as they can contribute to significant changes in relative speed (i.e., if the pedestrian is traveling at the same speed as the vehicle at one moment, but no longer doing so in the next moment, the warning may be inconsistent). These inconsistent warnings can also degrade the driver's ability to heed the warning and bring the vehicle to a stop before the crash. Finally, any potential sensor system must still address the fact that drivers tend not to react sufficiently to sensor warnings so as to avoid a crash—regardless of its ability to reliably detect pedestrians.

As in the case of the Doppler radars, the agency is not aware of any other types of currently available sensor-only systems that can address the backover safety concern better than rearview video systems. Sensor systems do not meet the need for motor vehicle safety in the types of backover crashes contemplated by Congress in the K.T. Safety Act not only because of the aforementioned technical limitations in the systems, but also because of the significant evidence that drivers do not react sufficiently to sensor warnings in order to avoid these crashes. While the agency's research focused mostly on ultrasonic sensor systems, the agency does not believe that any other type of sensor-based system would provide more benefits than rearview video systems.

Possible Future Developments Regarding the Rearview Image

The agency is aware of the development of potential technologies (such as automatic braking) which may address both the agency's concerns of accurate pedestrian detection and ensuring an appropriate and sufficient response to such detection without the necessity of providing an image of the area behind the vehicle. However, the available research at this time does not afford the agency sufficient information to develop performance requirements or assess the effectiveness of such systems to accurately detect pedestrians behind the vehicle and avoid a crash. During the course of this rulemaking, no commenter (on the ANPRM, on the NPRM, at the public hearing, or at the technical workshop) was able to provide information that would enable the agency to develop a minimum set of performance requirements capable of anticipating the design, benefits, and any associated safety risks of these new and future systems. Further, no commenter offered information regarding the ability of such systems to

[88] *See* Sense Technologies, *http://www.sensetech.com.*

more accurately detect pedestrians behind the vehicle when compared to the various sensor-based systems tested by the agency. While it may be possible that automatic braking or other future systems offer comparable or greater protection to the public without the use of a rearview image, the agency is not currently aware of any established, objective, and practicable way of testing such systems to ensure that they offer a minimum level of protection to the public.

Thus, the agency continues to believe that drivers of vehicles using technologies that do not afford some type of automatic intervention (e.g., automatic braking) need visual confirmation of the presence and nature of an unexpected obstacle in order to be motivated to take the steps necessary to avoid a backover crash. Rear visibility systems and the agency's performance requirements will need to address not only sensor system accuracy but also the aforementioned human factors findings (the ability of drivers to heed the sensor warning and take the appropriate action to avoid a backover crash) if they are to be effective in reducing backover crashes. If systems that can effectively and reliably avoid backover crashes without presenting the driver with an image of the area behind the vehicle become available in the future, it will then be feasible for the agency to evaluate their potential and use that information to consider whether any regulatory changes are desirable. While the agency shares the desire of a number of commenters for requirements that are technologically as neutral as possible, the agency emphasizes the statutory requirement to ensure that its performance requirements ''meet the need for motor vehicle safety.'' NHTSA believes that, under the current circumstances, the requirements in today's final rule are as technologically neutral as the agency can make them and still ensure that they ''meet the need for motor vehicle safety.'' We continue to believe that providing a driver with a view of the area behind the vehicle is currently the most effective way available to reduce backover crashes, as demanded by the K.T. Safety Act.

The Agency Continues To Encourage Future Research and Will Consider Future Rulemaking

NHTSA has made regulatory decisions within this rule based upon the best currently available scientific data and information. Consistent with its obligations under Executive Order (E.O.) 13563, Improving Regulation and Regulatory Review (Jan. 18, 2011), and E.O. 13610 on the retrospective review of regulations, NHTSA will review relevant new evidence and may propose revisions to the rule as necessary and appropriate to reflect the current state of the evidence and improve this regulatory program. NHTSA has already begun to obtain and review additional empirical evidence relevant to the real-world effectiveness of rearview video systems. NHTSA will gather and analyze additional data in this area—for example by monitoring trends in fatalities and injuries from backover crashes and additional information collections associated with other rulemakings or safety-related efforts. NHTSA also may consider additional collections of information that may trigger the Paperwork Reduction Act, and, would notify the public of these collections through the separate **Federal Register** Notices required under that Act. Further information collected by NHTSA could be used to inform future analyses. NHTSA may also identify and pursue additional issues for new research or conduct further research with regards to existing issues addressed in the rule.

Further, we note that the public (including industry) is able to petition NHTSA to modify the requirements of FMVSS No. 111 pursuant to the procedures established in 49 C.F.R. Part 552. Such modifications may be necessary in the future to accommodate new rear visibility system designs and the agency would consider these modifications in consultation with the public through the notice and comment rulemaking process. As we noted above, we encourage petitioners to provide data to demonstrate that new rear visibility systems can effectively address the backover safety problem by showing that these systems are not only able to accurately detect pedestrians behind the vehicle, but also induce drivers to react to avoid the crash. The agency would encourage petitioners to provide any relevant information regarding new potential systems that could be similar (but not limited to) the types of laboratory tests examined by the agency during this rulemaking process. We acknowledge that the research relevant for evaluating a new technology would vary depending on the type of technology considered. For example, an evaluation of an automatic braking system would ideally consider any relevant data on the system's ability to reliably detect a pedestrian behind the vehicle and apply the brakes. We further encourage petitioners to provide any relevant data or suggestions on how the agency could objectively test potential new systems. In summary, the agency will consider petitions for rulemaking to accommodate new systems designed to prevent backover crashes and the agency encourages petitioners to provide as much information as possible to enable the agency to effectively consider the petition.

Combination Systems Utilizing More Than One Countermeasure

Further, while we acknowledge the Consumers Union and the Automotive Occupant Restraints Council's comments encouraging the agency to examine combining sensors and rearview video systems, we decline to require any additional countermeasure technologies beyond a visual rear visibility system in today's final rule. As we noted in the ANPRM, our research seemed to indicate that drivers with multiple-technology rear visibility systems avoided unexpected obstacles less successfully than drivers equipped with video-only systems. While we requested comment on this counter-intuitive finding, the agency is currently not aware of any additional research that could help quantify any potential increase in safety benefit through requiring multiple countermeasure technologies. Accordingly, we do not believe that it is appropriate to require any additional rearview countermeasures at this time.

However, we note that today's final rule does not preclude manufacturers from utilizing sensors, mirrors, or other potential future technologies to augment the functionality of the rear visibility systems required by today's final rule. Technologies such as the cross-view mirrors suggested by Sense Technologies, thermal imaging systems suggested by Continental and BMW, the 3D Photonic Mixer Device suggested by IFM, and automatic brake intervention as suggested by the Automotive Occupant Restraints Council may be used by manufacturers to supplement the rear visibility systems installed to meet the requirements of today's final rule. However, as mentioned above, the agency currently does not have data to adequately assess the potential safety benefits of these additional systems. Conversely, the agency also does not wish to preclude the development of new potential rearview safety features which may reduce crash risk more effectively than those supplemental systems we have investigated. A system that successfully sensed a human behind the vehicle and automatically applied the brakes could be more effective than a system that provides an image and relies upon the driver to see

the image and respond in a timely manner.[89] However, the agency has not evaluated a production version of such a system to be able to accurately determine its possible benefits, disadvantages and costs. Thus, while today's final rule does not include any provisions that require the aforementioned technologies; it also does not preclude their application.

NCAP-Type Evaluation of Rear Visibility Systems

Additionally, MEMA and Delphi suggested that the agency encourage the development of new rearview technologies through an NCAP-type system. As we noted above, the agency has already updated NCAP to include rearview video systems. However, this recent update to NCAP did not change the program in the manner suggested by the commenters. The new update offers comparative information on vehicle models and their equipment levels (i.e., allows consumers to identify the models that have rearview video systems). However, it does not include comparative information assessing the different types of rear visibility systems relatively against each other.

As in our earlier discussion of alternative countermeasure technologies, we believe that additional research would be needed in order to develop the appropriate test procedures that can objectively evaluate and offer useful comparative consumer information on additional countermeasure technologies in the manner suggested by the commenters. While the agency does not preclude the possibility of developing such test procedures in the future, it is unable to implement such a program as a part of today's final rule.

Convex Side View Mirrors

Finally, we disagree with Ford and Brigade that today's rule should adopt the requirements in ECE R.46 for driver-side side view rearview mirrors. As we noted in the NPRM, the convex driver-side side view mirrors permitted by the ECE R.46 regulation do not enable the driver to detect pedestrians directly behind the vehicle, so they would not be able to cover the highest risk areas directly behind the vehicle. Thus, we did not propose a change to the driver-side side view mirror requirement in the NPRM nor do we adopt such a change today. We decline to amend FMVSS No. 111 to match the requirements of ECE R.46 in today's final rule.

d. Field of View

The NPRM proposed a field of view minimum requirement that covers 5 feet from either side of the vehicle center line to 20 feet longitudinally from the vehicle's rear bumper and a test procedure to ensure compliance as delineated by the seven test objects shown below in Figure 1. Commenters generally expressed concern in regards to three aspects of this proposal: (1) Whether the 20-foot by 10-foot field of view coverage area is appropriate, (2) whether the test procedure and test objects appropriately cover all the necessary areas behind the vehicle, and (3) whether or not visual overlays (such as guidance markers or controls) are considered when evaluating the field of view performance requirement. The following paragraphs will respond to these concerns in turn.

BILLING CODE 4910–59–P

[89] As described above, the agency continues to be interested in any relevant research that shows the effectiveness of such systems (e.g., in accurately detecting persons behind the vehicle) and an objective manner with which to test these potential new systems.

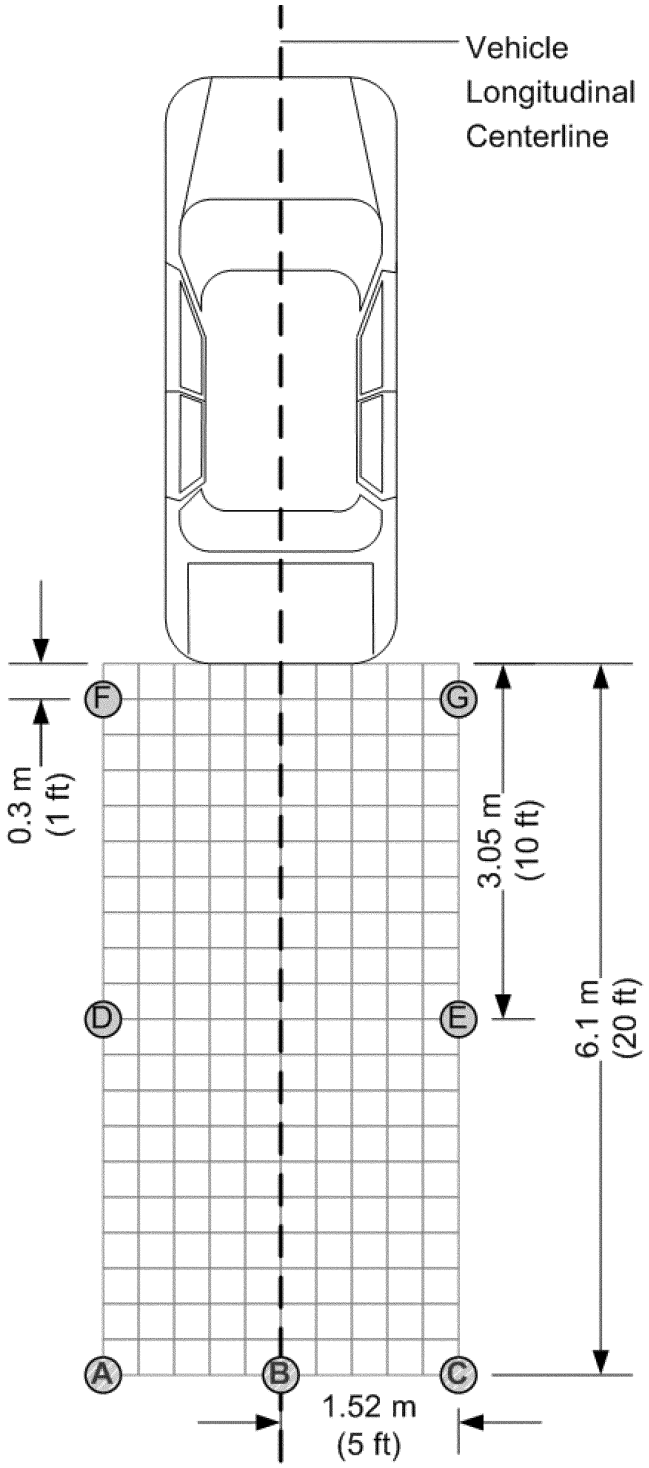

Figure 1. Countermeasure Performance Test Area Illustration and Required Test Object Locations (Units are meters)

BILLING CODE 4910–59–C

Coverage Area

In the ANPRM, the agency solicited comment on what areas behind the vehicle should be visible to the driver in order to best improve safety. In doing so, the agency tentatively suggested a 50-foot by 50-foot area coverage area as a possible option. In response to the lateral requirements, multiple organizations (such as Sony, the Advocates, and KidsAndCars.org) stressed the importance of covering the possibility that children may enter the area directly behind the vehicle from each side. In terms of longitudinal distance, advocacy groups such as the Advocates, KidsAndCars.org, and the Consumers Union recommended that any ''gaps'' between the rear coverage zone and the vehicle's rear bumper

should be eliminated. The Advocates further noted that there should be ''no reason why a rearview video system could not provide an optimal coverage area that . . . extends at least 20-feet behind the vehicle.'' However, other organizations such as the Automotive Occupant Restraints Council, General Motors, and Honda stated that a small gap (of approximately a foot or less) would be advantageous in lowering the costs of the system while still providing an adequate amount of protection.

After considering the comments on the ANPRM and the data from the SCI and Monte Carlo simulation research, the agency proposed in the NPRM a minimum field of view that covers 5 feet from either side of the vehicle centerline over an area extending 20 feet behind the vehicle's rear bumper. In regard to the lateral coverage area, we noted in the NPRM that while the Monte Carlo simulation data shows that there is at least a small level of crash risk as far as 9 feet laterally to each side from the vehicle centerline, the vast majority of the crash risk is encompassed within an area extending 5 feet laterally from the vehicle centerline. We further noted that while the Monte Carlo simulation data shows that some level of crash risk extends as far as 33 feet longitudinally from the rear vehicle bumper, the actual SCI case data show that 77 percent of the backover crashes would have been covered by a 20-foot longitudinal field of view.[90] Thus, in considering the available data, the agency proposed a 20-foot by 10-foot minimum field of view coverage area in the NPRM and proposed to test this coverage area using seven test objects placed along the perimeter of the 20-foot by 10-foot zone.

Comments

In response to the NPRM's proposed minimum field of view, the commenters raised various concerns. First, the Advocates expressed concern that manufacturers are not required to cover the area between the test objects. They stated that it could be possible for two cameras to be used to display all the required test objects but create a large blind zone in the areas between the test objects. Second, KidsAndCars.org stated in its comments that a 180-degree (horizontal angle) camera would offer the most protection as it would help the driver detect children that enter the path of the moving vehicle from the side. Sony similarly advocated for a more stringent field of view requirement that induces manufacturers to use 180-degree cameras. Sony stated that this would help cover lateral intrusions and that using 180-degree cameras would not create a significant increase in cost.

Third, General Motors, Volkswagen, and the Alliance suggested in their comments that the required field of view should not be wider than the width of the vehicle because the outboard targets will be visible in the rear view mirrors and because this penalizes smaller vehicles. Fourth, Sense Technologies questioned whether using a minimum field of view requirement is appropriate as it is prejudicial towards technologies that do not present the rearview in the form of an image and does not offer the same coverage as its product of persons/objects entering into the path of the backing vehicle from the side. Finally, the IIHS commented that the 20-foot longitudinal field of view coverage is inconsistent with the Monte Carlo research data because the data in the ANPRM does not show a clear inflection point at 20 feet and that there is a 0.3 probability of a pedestrian being struck by a vehicle at up to 27 feet.

Agency Response

Today's final rule adopts the minimum field of view requirement proposed in the NPRM, which extends 20 feet longitudinally from the vehicle's rear bumper and 5 feet to either side of the vehicle centerline as delineated by the seven test objects. After considering all the comments received on the NPRM, we believe that the proposed field of view continues to be the most appropriate.

However, as the Advocates points out in its comments, it is conceivable that a manufacturer could comply with the proposed field of view requirement while still leaving a significant blind zone by using two cameras to cover only the test objects along the perimeter of required field of view. While it is unlikely that a manufacturer may utilize this configuration, we agree with the Advocates that this is a safety risk as such a configuration would likely create a blind zone where there is the highest risk for a backover crash. In order to address this concern, we have amended the definition of ''rearview image'' to require that the image be ''detected by means of a single source.'' We believe that this definition more accurately reflects the research and the discussion in this rulemaking which has continuously utilized only one camera when considering the rearview video system countermeasure option. We agree with the Advocates that this point was not made explicit in the proposed rule regulatory text and today's final rule adopts the aforementioned definition in order to avoid such confusion.

On the other hand, we do not agree with KidsAndCars.org and Sony that the agency should specify a 180-degree camera requirement or increase the field of view so as to induce a 180-degree camera requirement. As noted previously, a goal of this rulemaking has been to increase the required field of view available to drivers while affording manufacturers flexibility in selecting methods to achieve that field of view. Thus, we decline to specify a camera angle requirement as suggested by KidsAndCars.org.

We also decline to expand the required field of view in order to induce manufacturers to utilize 180-degree cameras as suggested by Sony. We believe that any modification to the required field of view should be based on the associated crash risks of the different areas behind the vehicle as opposed to the type of equipment we anticipate manufacturers will use to fulfill those requirements. While the agency acknowledges the concerns of Sony and KidsAndCars.org that pedestrians may enter the backing path of the vehicle from the left or right, the agency continues to believe that the 20-foot by 10-foot area covers the relevant areas behind the vehicle with the highest crash risk. In making this assessment, the agency examined both data from the SCI cases and from the Monte Carlo simulation.

While as many as 41 of the SCI cases involved the crash victims entering the backing path of the vehicle from the left or right sides, the data do not identify accurately the location, direction, and speed of the crash victim at the beginning of the backing maneuver because SCI cases are post-crash analyses of real world crashes. In these analyses, the agency is only able to reconstruct the events of the accidents using its best estimates based on the available information. Therefore, a more refined assessment of the crash risks associated with the areas to the left or right of the vehicle from which pedestrians may enter the path of the backing vehicle is not possible through the SCI case data.

However, through the Monte Carlo simulation, the agency has been able to assess the crash risks associated with the areas to the left and right of the backing vehicle. As mentioned previously, the Monte Carlo simulation assigns crash risks to 1-foot by 1-foot areas behind the backing vehicle based on the location of the pedestrian at the moment the vehicle begins its backing maneuver. In other words, the Monte Carlo simulation generates the

[90] 75 FR 76228.

probability that a pedestrian, positioned at a given location behind the vehicle at the beginning of the backing maneuver, would be struck by the backing vehicle. The Monte Carlo data show that the vast majority of the crash risk is encompassed within an area extending 5 feet laterally of the vehicle's longitudinal centerline. The agency believes that the data from the Monte Carlo simulation cover the lateral intrusion crash risk contemplated both by Sony and KidsAndCars.org because the Monte Carlo data show that pedestrians originating from locations beyond 5 feet laterally from the vehicle centerline at the beginning of the backing maneuver have a significantly reduced risk of being struck by the backing vehicle.

Absent any additional information regarding the crash risks associated with the areas beyond 5 feet laterally from the vehicle's longitudinal centerline, we believe that the 10-foot wide lateral specification for the field of view requirement in the NPRM is appropriate for today's final rule. In addition, while we acknowledge Sony's comment that the costs of implementing requirements for 180-degree cameras may be less than anticipated in the NPRM, we note that it did not provide any additional information that the agency could use to provide a more accurate estimate. Although the agency has attempted to better quantify the costs of the various technologies that can be used to fulfill the requirements of today's final rule, we are not aware of additional supportive information regarding the crash risks of the areas that would be encompassed by an expanded field of view. Thus, we decline to modify the field of view in today's final rule for the sole purpose of encouraging manufacturers to utilize a wider angle camera.

In addition, we do not agree with the IIHS that the available data do not support the establishment of the 20-foot longitudinal field of view requirement. In setting the longitudinal requirement for the field of view, the agency also examined both the SCI and Monte Carlo simulation data and established the 20-foot requirement based on these data. While the agency does not believe that the SCI cases can help assess lateral crash risk, the agency believes that the SCI case data are more useful in assessing the longitudinal crash risks associated with backover crashes. Unlike assessing the crash risks resulting from side incursions where the position and trajectory of the pedestrian at the beginning of the backing maneuver is crucial, the assessment of the longitudinal crash risk can be derived from the distance traveled by the backing vehicle before striking the pedestrian. Unlike the position of the pedestrian, the position of the vehicle and the distance it traveled can be accurately determined through SCI cases. Thus, the agency believes that the SCI case data are useful in determining the longitudinal crash risks behind a backing vehicle.

However, unlike in the evaluation of the lateral crash risks, the Monte Carlo simulation data do not afford the agency a clear inflection point where the agency could reasonably delineate a limit. In previous documents released by the agency, the data from the Monte Carlo simulation were truncated in order to simplify our presentation of the information. After the NPRM was published, we docketed [91] the raw data results from the Monte Carlo simulation. These data show a gradual decrease in crash risk as the distance increases from the rear of the vehicle. Thus, while the agency relied on the Monte Carlo simulation data to determine the lateral boundaries of the field of view requirement, the agency believes it is more appropriate to consider the SCI case data in conjunction with the Monte Carlo simulation data to determine the longitudinal boundaries for the field of view because the SCI case data do contain a clear inflection point where the agency can reasonably establish a limit.

We acknowledge the comment from IIHS that a crash risk probability of 0.3 exists beyond the 20-foot mark in the Monte Carlo simulation. However, we do not believe the agency can reasonably rely upon the data change from a probability of 0.3 to 0.2 to establish a standard because the raw data from the Monte Carlo simulation show a gradual decrease in crash risk as the distance from the rear of the vehicle increased. However, when the Monte Carlo simulation data is considered in conjunction with the SCI case data, we believe it is rational to conclude that the 20-foot longitudinal requirement will cover all the areas behind the vehicle that are associated with the highest crash risk.

For the purposes of delineating the longitudinal extent of the required field of view, the SCI backover case data show a clear drop in number of crashes where the impact of the crash victim occurred after the vehicle had traveled 20 feet. When considering these data along with the data from the Monte Carlo simulation that show a probability crash risk of approximately 0.3 at 20 feet from the vehicle bumper, the agency believes that it is rational to conclude that a longitudinal requirement of 20 feet will cover the relevant areas behind the vehicle associated with the highest crash risk. For those reasons, today's final rule adopts the proposed requirements from the NPRM which require a 20-foot by 10-foot field of view as delineated by seven test objects located along its perimeter.

We also do not agree with the Alliance's comment that the width of the test object placement should be proportional to the width of the vehicle, and we have maintained the test object locations at a width of 5 feet to the left and right of the longitudinal centerline of the vehicle for the purposes of today's final rule. As in our response to Sony's comment on increasing the required field of view, we note here that the data from the Monte Carlo simulation indicate that the vast majority of the crash risk is encompassed within an area extending 5 feet laterally from the vehicle centerline.[92] Further, we believe that a consistent field of view requirement does not significantly penalize narrower vehicles because we anticipate that similar equipment will be used to comply with today's final rule irrespective of vehicle width and there are no data to indicate that narrower or small vehicles are responsible for fewer instances of backover crashes (resulting in either fatalities or injures). Finally, as we are unaware of any potential safety or other benefit in altering the required field of view according to vehicle width, and we are conscious of the increased complexity of compliance that can result from certifying vehicles to different fields of view, we believe that it is appropriate to establish a single field of view requirement for all vehicles.

Finally, we do not agree with Sense Technologies that a field of view requirement is not appropriate for this rulemaking. While we understand the concern that, by requiring a view, certain types of backover countermeasures are not sufficient by themselves, our research to date shows that systems that afford drivers the ability to see the pedestrian behind the vehicle are the most successful at helping drivers avoid striking the pedestrian. While products like cross view mirrors can help increase a driver's left and right field of view, the research has shown that they do not

[91] Docket No. NHTSA–2010–0162–0220

[92] The Monte Carlo simulation analysis we described in previous sections of this document shows that most of the crash risk in areas behind the vehicle are between 5 feet left and right of the vehicle centerline (assuming a vehicle width of six feet). *See* Docket No. NHTSA–2010–0162–0220.

allow a driver to detect objects within the backing path of the vehicle. The relative merits of sensor and mirror systems were further explored earlier in this document as well as in the NPRM and ANPRM.

Test Objects

It has been the agency's position that test objects should be used to evaluate the field of view and that these test objects should be based on the height and width dimensions of a toddler. In the ANPRM, the agency suggested utilizing test object dimensions based on a 1-year-old toddler since 26 percent of victims in backover crashes were 1-year-old toddlers. Commenters on the ANPRM suggested that utilizing the average dimensions of an 18-month-old toddler may be a more appropriate representation of the data presented in the SCI cases. In the NPRM, the agency noted the small difference in average dimensions between the 1-year-old and 18-month-old toddlers [93] and agreed with the principle of basing the test object on the dimensions of the 18-month-old toddler. Thus, the NPRM proposed a cylindrical test object with a height of 32 inches and a diameter of 12 inches, consistent with an 18-month-old toddler.

The agency further proposed in the NPRM to demonstrate vehicles' compliance with the minimum field of view requirement by placing seven test objects (with the aforementioned dimensions) along the perimeter of the 20-foot by 10-foot minimum coverage area behind the vehicle. As the agency was conscious that it may not be feasible for certain vehicles to mount a rearview camera above 32 inches, we proposed to require the entire height and width of each test object be visible only for those test objects located 10 feet or farther from the rear bumper of the vehicle. However, for the remaining test objects F and G (located only 1 foot behind the rear bumper of the vehicle), we proposed that a width of 5.9 inches must be visible along any point on the test object. The agency reasoned that this criterion would result in a 5.9 inch square or larger portion of a child be visible. Since 5.9 inches corresponds to the average width of an 18-month-old toddler's head, the agency believed that this would give the driver sufficient information to result in visual recognition of a child.

For testing purposes, two different design patterns were proposed for the test objects. To aid in the assessment of whether or not the required 150 mm (5.9 inch) width of test objects F and G are visible, the NPRM proposed to place a 150 mm wide stripe, of a contrasting color, over the entire height of these two test objects. As discussed later in this document, the NPRM proposed that test objects A through E be marked with a horizontal band covering the uppermost 150 mm of the height of each test object in order to aid in the assessment of the required image size.

Comments

In response to the NPRM, the advocacy groups expressed a number of concerns with the proposed visibility requirements as they relate to the test objects. First, the Advocates were concerned that the requirement that only 5.9 inches of the width of the F and G test objects be visible could allow a blind zone to exist as high as 38 inches vertical from the ground next to the bumper and extend at a descending angle rearward as far as 9 feet into the required field of view. Second, the Advocates, KidsAndCars.org, and the Consumers Union commented that the final rule should eliminate the 1-foot (0.3-meter) gap between the rear bumper and test objects F and G. These organizations claimed that this gap creates a blind zone directly behind the bumper which has a high probability of backover crashes (according to the Monte Carlo simulation). Conversely, Magna commented that many current rearview video systems do cover the rear bumper surface and do not have a 0.3-meter gap behind the bumper even though the test objects may be 0.3 meters away from the bumper.

On the other hand, the manufacturers generally raised two issues in their comments regarding the proposed test procedure. First, the Alliance expressed concern that low-profile vehicles, such as an Audi R8, will not have a camera mounted high enough to capture all the test objects because the vehicle's height is below the height of the test objects. Volkswagen suggested NHTSA resolve this concern by establishing that the field of view be limited by the height of the mounting point of the camera. Second, by noting that the agency assumed in the NPRM that a 130-degree camera would be able to cover the required field of view, Porsche, the Alliance, Volkswagen, and BMW all expressed concern that the 130-degree camera will not be able to cover all of the required portions of each test object because test objects F and G are located beyond a 130-degree angle coverage from the vehicle centerline. These commenters expressed concern that the location of the F and G test objects will effectively require a wider angle camera. Conversely, Magna noted in its comments that a 130-degree camera can sufficiently cover the field of view when the mounting height and angle are taken into account. Thus, Magna asserted that there is no need to utilize a 180-degree camera as some commenters suggested.

Various commenters also noted that the visibility requirement for test objects F and G do not include height requirements. Global Automakers sought clarification in its comments as to where the 150 mm (5.9 inch) width will be measured on test objects F and G. Similarly, Delphi and MEMA requested that NHTSA clarify the specific portions of the F and G test objects that must be viewable (without making a specific recommendation). On the other hand, Sony's comments suggested a 150-mm by 150-mm requirement for the area that must be visible on the F and G test objects in order to address concerns regarding the lack of a vertical specification.

The agency also received comments on the visual composition of the test objects. The Alliance requested clarification on whether or not test objects F and G can be rotated in order to aim the 150-mm stripe towards the camera during the test. Honda further sought clarification as to whether the proposed rule required a 150-mm radius or circumference of the F and G test objects be visible. Delphi commented that the vertical stripe on test objects F and G does not clearly show the portions of the test object that must be viewable and instead suggested a pattern of 4-in. by 4-in. squares to be painted on the test objects. Additionally, MEMA sought clarification as to what a ''color that contrasts with both the rest of the test object and the test surface'' means in the test procedure under paragraph S14.1.3 describing the test object. Finally, Volkswagen recommended that all test objects be marked with the same pattern in order to simplify the test procedure.

Agency Response

After considering the aforementioned comments, we have concluded that the field of view test object requirements, as proposed in the NPRM, are most appropriate for today's final rule. We have considered the scenario described by the Advocates in which a camera is mounted so as to provide a view of only the top of test objects F and G, and then the full height of test objects D and E. We believe that such an arrangement is highly unlikely because the camera

[93] 75 FR 76222; CDC, Clinical Growth Charts. Birth to 36 months: Boys; Length-for-age and Weight-for-age percentiles. Published May 30, 2000 (modified 4/20/2001) CDC, Clinical Growth Charts. Birth to 36 months: Girls; Length-for-age and Weight-for-age percentiles. Published May 30, 2000 (modified 4/20/2001).

angle would be aimed primarily toward the sky. Such a rear visibility system would have a camera mounted intentionally to meet the bare minimum of our requirements, while offering no apparent benefit to the consumer or to the manufacturer. It seems unlikely that such a configuration would meet the vehicle manufacturer's customer expectations and does not apparently allow the manufacturer to avoid incurring any costs—making this situation unlikely in the real world.

In addition to this situation being highly unlikely, the agency believes that the proposed width-only requirements for test objects F and G are necessary because they enable the field of view requirements to apply to all different vehicle types and sizes. As we are conscious of the fact that vehicle size and rear configuration can vary widely between small low-speed vehicles, low riding sports cars, and buses up to a GVWR of 10,000 pounds, we have designed the field of view test object requirements to be applicable to all the aforementioned vehicle types. In order to preclude manufacturers from utilizing the unlikely camera arrangement described by the Advocates, this rule would need to require that manufacturers construct vehicles so as to enable the rear visibility system see a larger portion of the F and G test objects. As this would likely unnecessarily restrict vehicle design, we have concluded that the unlikelihood of a manufacturer electing to pursue the camera arrangement described by the Advocates does not warrant the additional costs associated with increasing the field of view requirements for the F and G test objects.

The agency also does not agree with the Consumers Union, the Advocates, and KidsAndCars.org that the placement of the F and G test objects, 0.3 meters from the vehicle's rear bumper, creates a blind zone that may create a significant safety risk. We note that the center axis of each of the test objects designated F and G is located 1.52 meters (5 feet) laterally from the vehicle longitudinal centerline and 0.3 meters rearward of the vehicle's rear bumper. Because the location specifications the test objects are defined according to each test object's center axis, the requirement that the rear visibility system cover a 150-mm width of test objects F and G (each with a diameter of 0.3 meters) will effectively require the field of view to cover a significant area inward of 0.3 meters behind the vehicle bumper (at a lateral distance of 1.52 meters from the vehicle's longitudinal centerline). The agency acknowledges that a rear visibility system meeting the above requirements many not cover the required 150-mm width of a test object with a center axis less than 0.3 meters rearward of the vehicle bumper at the lateral distance of 1.52 meters from the vehicle's longitudinal centerline. However, the agency is currently not aware of any vehicle, covered by today's final rule, which has a vehicle width which exceeds 1.52 meters on either side from the vehicle's longitudinal centerline. Accordingly, a child located in front of the F or G test objects, and outside of the required field of view, would not be struck by a reversing vehicle.

In order to be struck by a reversing vehicle, the child must move towards the vehicle centerline. As the child moves towards the vehicle centerline, the possible blind zone that can exist behind the bumper will be significantly smaller than 0.3 meters. Because blind zones will be significantly decreased for areas behind vehicles that are within the width of the vehicle, the agency does not believe that rear visibility systems which meet the requirements of today's final rule will be unable to view a 150-mm width of any test object located directly along the bumper of any vehicle covered by today's final rule. While today's final rule does not include test objects at locations directly along the vehicle bumper in order to accommodate the wide variety of vehicle sizes and designs covered by today's final rule, we believe the requirements in today's rule are a reasonable proxy for ensuring that test objects in those locations would be sufficiently visible to the driver through the required rear visibility system. Further, because the test objects utilized in today's rule are designed to simulate the height and width of an 18-month-old toddler, we do not believe that the locations for the F and G test objects 0.3 meters behind the vehicle rear bumper will create a significant safety risk.

Today's final rule also denies the Alliance's request that the agency afford additional accommodation for vehicles that have low-mounted rear visibility systems. Specifically, we do not agree with Volkswagen that rear cameras mounted at a lower height than the height of the test objects will be unable to cover all the required vertical portions of the field of view. As mentioned earlier, we designed the field of view requirements conscious of the fact that vehicle height can vary greatly and we are unaware of any camera that has a vertical angle limitation which would prevent it from easily being mounted at a pitch which covers the full height of test objects A through E. Separately, we also disagree with Porsche, the Alliance, Volkswagen, and BMW that a 130-degree camera is unable to cover the required horizontal portions of the field of view. We believe that the diagrams presented by the commenters regarding the inability of the 130-degree camera to cover test objects F and G (located 5 feet laterally from the vehicle center line and 1 foot longitudinally from the rear bumper) failed to consider the three-dimensional properties of a camera's viewing angles. As Magna commented, a 130-degree camera can readily cover the 150-mm width requirements of test objects F and G when mounting height and camera pitch is considered. We further note, that in testing conducted by the agency, the vast majority of vehicles were capable of meeting the field of view requirements as proposed in the NPRM.[94] Thus, today's final rule adopts those requirements from the NPRM.

Today's final rule also responds to the commenters' concern regarding the portions of test objects F and G that must be visible. We confirm, in today's notice, that the visibility requirements for those test objects are width-only (and do not include a vertical specification). As stated above, the 150-mm width represents the width of the average 18-month-old toddler's head. We continue to believe that if a horizontal width of 150 mm of the F and G test objects is visible through the rearview image, that a sufficient area of the average 18-month-old child will be visible to the driver such that a driver can visually recognize the child and avoid a crash. As noted above, we are cautious against increasing a vertical specification of the F and G test objects (as suggested by Sony) because we are conscious that the requirements of today's final rule must be flexible enough to accommodate a wide variety of vehicles and configurations. We also note that to require a vertical specification would increase the cost and complexity of the test procedure by requiring some level of vertical measurement of the F and G test objects. While horizontal measurement requirements are easily confirmed using the vertical stripe pattern adopted in today's final rule for test objects F and G, measuring the vertical distance along those test objects presents greater practical challenges. Thus, in the absence of a clear increase in potential safety benefit, we decline to include a vertical specification for the required view of the F and G test objects.

[94] *See* Docket No. NHTSA–2010–0162–0133, Vehicle Rearview Image Field of View and Image Quality Measurement.

In this document, we also seek to address and clarify the various commenters' concerns regarding the placement and orientation of the test objects. As Honda indicated in its comments, the proposed regulatory text in the NPRM did not clearly identify whether the 150-mm width requirement for test objects F and G would be measured along the circumference of the test object or would be measured in some other manner. We agree that this uncertainty should be clarified and have modified the regulatory text to indicate that the 150-mm width requirement will be measured along the circumference of test objects F and G. In a related matter, we acknowledge the Alliance's concern regarding whether or not test objects F and G can be rotated in order aim the 150-mm-vertical stripe towards the camera. We note that the requirements from the proposed rule (and adopted in today's final rule) merely requires that a 150-mm width of test objects F and G be visible and does not restrict the orientation of the vertical stripe on those test objects.

However, we do not agree with Delphi and Volkswagen regarding their recommendations on the visual patterns that should be used for the test objects. It seems that, as the 4-inch by 4-inch squares proposed by Delphi would not correspond easily to any of the requirements of today's final rule, it would not aid in the assessment of whether or not a given rear visibility system can meet the requirements in today's final rule. Further, we decline to adopt the same visual pattern for all test objects as recommended by Volkswagen because the different patterns are intended to aid in the assessment of different requirements. The horizontal stripe on test objects A, B, and C assists in evaluating compliance with the image size requirement whereas the vertical stripes on the F and G test objects assist in evaluating compliance with the field of view requirement. Accordingly, we adopt the visual patterns for all the test objects as proposed in the regulatory text in the NPRM in today's final rule.

Finally, we acknowledge MEMA's concern that the test procedure does not specify what constitutes a ''color that contrasts with both the rest of the cylinder and the test surface.'' However, similarly to the orientation of the F and G test objects, the requirements of today's final rule merely state that a 150-mm-wide portion of the test objects (along the circumference) must be visible and that test objects A, B, and C must be displayed at an average subtended angle of no less than 5 minutes of arc. Using a contrasting color band primarily assists in the accurate measurement of the test object image width using the photographic data. Therefore, any color may be used in order to determine the compliance of a given rear visibility system.

Overlays

In the ANPRM, NHTSA solicited comments regarding different methods of presenting information to drivers. Multiple commenters responded with information regarding the use of overlays as visual warnings or indicators to help assist drivers. In the NPRM, the agency chose not to propose any requirements regarding overlays, but acknowledged the potential benefit of using overlays in conjunction with sensor-based technologies to better assist the driver.

Comments

In their comments on the NPRM, the manufacturers were concerned that overlays will obscure the required view of the test objects during the field of view test procedure and cause their systems to be considered non-compliant. Commenters such as the Alliance suggested that overlays (such as guidelines, arrows, icons, controls) are generally helpful to drivers and that, in practice, they will not operate to obscure an entire child. Specifically, Global Automakers suggested that the agency account for overlays by extending the width-only, 150 mm requirements of test objects F and G to apply to test objects A through E as well. Additionally, Global Automakers was concerned that as certain overlays may react to driver input from the steering wheel, the overlays on the video screen may be in different positions depending on the position of the steering wheel. Thus, it suggested that the test condition should specify that the steering wheel should be in the straight ahead position during the test. Honda's comments also expressed support for specifying the position of the steering wheel in the test condition.

Agency Response

The agency agrees with the commenters that video image overlays may have potential to add safety-related features to rear visibility systems.[95] On the other hand, the agency is also conscious that such overlays have the potential to be applied to the rearview image in both safe and unsafe manners. Depending on their size, location, and orientation, overlays have the potential to create unsafe blind zones in the rearview image and to mask small obstacles, such as children. However, without further research, the agency is not currently aware of a practical method of regulating these aspects of the use of overlays. The agency currently is not aware of any data which would support threshold values for regulating the size, location, and orientation of overlays. Thus, today's final rule does not limit the use of overlays so long as the overlays do not violate any of the existing requirements established by today's final rule.

However, we note that overlays can be designed to appear automatically in the rearview image in locations which cover the required portions of the test objects. In such a situation (e.g. guidelines showing the backing path of a vehicle which pass through any of test objects A through E), the overlays would violate the field of view requirements of today's final rule. However, as discussed in the sections below, today's final rule allows manufacturers to design systems which permit drivers to modify the field of view so long as a field of view compliant with today's final rule is displayed, by default, at the beginning of each backing event. Therefore, overlays would not violate the requirements of today's final rule if manually activated by the driver or if they do not cover any of the required portions of the test objects when displayed automatically.

While today's final rule contains no specific provisions regulating overlays, we also decline to create special exclusions or accommodations for overlays as suggested by various commenters. Although we agree that overlays have the potential to add safety-related features to the rear visibility system, we do not agree with the Alliance and other commenters that suggest that overlays cannot operate in practice to obscure a child. Thus, we decline to amend the field of view requirements so as to disregard overlays or to apply the same 150 mm width-only requirement to all the test objects as suggested by Global Automakers. We note that while the F and G test objects have width-only requirements in order to accommodate the large degree of size variation that can exist in vehicles covered by today's final rule, there is no similar concern for the remaining test objects.

However, we acknowledge the Global Automakers' concern that on-screen overlays may react to driver use of the steering wheel and that the steering wheel position can affect a vehicle's compliance with the requirements of

[95] Several commenters stated that future rear visibility systems may be able to perform advanced functions such as object detection which could utilize overlays to warn drivers of pedestrians located behind the vehicle.

today's final rule. Like the non-interactive overlays above, the agency is currently unaware of a practicable method of separating safe applications of overlays from unsafe applications of overlays. Thus, today's final rule also does not establish any specific provisions regulating the use of overlays which react to steering wheel orientation.

However, in order to ensure test repeatability, the agency clarifies the steering wheel test condition by stating in the test procedure that the steering wheel will be placed in a position where the longitudinal centerline of all vehicle tires are parallel to the vehicle longitudinal centerline. This steering wheel position is meant to simulate the straight ahead steering wheel position suggested by Global Automakers. Using this test condition, overlays in the form of guidelines which show the backing path of the vehicle would be prohibited from covering the required portions of the test objects when the steering wheel is placed in the straight ahead position. We believe that this steering wheel position is appropriate because it is likely the position which most closely reflects the real world driving conditions experienced by drivers conducting a backing maneuver along a driveway connecting a place of residence to a street. While we acknowledge that not all backing maneuvers will be conducted along a straight path, we believe that straight ahead steering wheel position most appropriately approximates the likely steering wheel positions during a backing maneuver when compared to the other available steering wheel positions.

The agency agrees that overlays can be designed to enhance the safety features of the rear visibility system. While we have not made any special accommodations for overlays, we expect that most of the currently used overlays will comply (or can easily be adjusted to comply) with our current requirements. By establishing the steering wheel condition and clarifying how the requirements of today's rule apply to overlays, we do not expect that existing overlay designs will prevent rearview video systems from meeting the requirements of today's rule. However, the agency remains concerned that future overlay designs have potential to operate unsafely depending on their size, orientation, and placement in the rearview image. Although the agency is currently unaware of a practicable method of regulating these aspects of the overlays, we expect that manufacturers will design overlays conscious of the fact that the rear visibility system is required by the provisions of today's final rule for an important safety purpose. We note that our decision not to regulate overlays does not relieve manufacturers from designing their system overlays so as to afford their customers a reasonable ability to see the required field of view.

e. Image Size

Beginning with the ANPRM, the agency has consistently expressed the position that the display of the required rear visibility system should produce images of a sufficient size so as to enable a driver to discern that objects are present behind the vehicle. Through the ANPRM, NHTSA requested comment on potential solutions to this problem such as including requirements restricting image size, overall display size, display resolution, image distortion, or image minification. In response to the ANPRM, multiple commenters advocated for various overall display size requirements based on different methods of calculating what a person can reasonably see. For example, Ford suggested that a 2.4-inch screen would be sufficient based on the measurement technique of New South Wales' Technical Specification No. 149 and its experience regarding customer acceptance of screens of this size. Magna cited studies conducted by General Motors and the Virginia Tech Transportation Institute which indicated that screens of 3.5 inches or larger led to the highest rates of crash avoidance.

Rather than propose a minimum overall display size as commenters suggested, the NRPM proposed to regulate the image size as measured by the apparent size of test objects as displayed to the driver through the rear visibility system. In general, NHTSA is concerned with setting performance standards which directly address the safety concern while still affording manufacturers as much design flexibility as possible. Thus, the NPRM did not include a minimum overall display size as a driver's ability to perceive an object displayed is affected not only by the display size, but also by the display location within the vehicle. To avoid setting restrictions on both the size and the location of the display within vehicle, the NPRM proposed to adopt an image size requirement which regulates how large the displayed objects will appear to the driver.

Thus, the NPRM proposed that test objects A, B, and C, (the three test objects located 20 feet behind the rear vehicle bumper in the field of view test procedure) be displayed with sufficient size resulting in an average subtended visual angle of no less than 5 minutes of arc [96] when tested in accordance with the proposed test procedures.[97] Additionally, each of the individual test objects A, B, and C may not be displayed at a size resulting in a subtended visual angle of less than 3 minutes of arc. This proposed requirement was based on research originally published by Satoh, Yamanaka, Kondoh, Yamashita, Matsuzaki and Akisuzuki in 1983 which examined the relationship between an object's visual subtended angle, and the subject ability of a person to perceive that object. This study concluded that an object must subtend to at least 5 minutes of arc in order for a person to make judgments about the object.

The NPRM also noted that NHTSA had previously based regulatory requirements, in part, on the Satoh research. For example, the school bus mirror requirements contained in paragraph S9.4 of FMVSS No. 111 require that the worst-case test object (cylinder P) be displayed at a subtended angle of no less than 3 minutes of arc. The NPRM reasoned that a value less than 3 minutes of arc is appropriate for school bus mirrors because school bus drivers are specifically trained not only to operate commercial vehicles, but also to use the school bus-specific mirrors. Further, the cross-view mirrors required by paragraph S9.4 of FMVSS No. 111 are intended for use while the school bus is stationary—thus affording the driver as much time as necessary to assess the objects in the mirror. As the images presented in passenger vehicles are intended for average drivers during moving situations, the NPRM tentatively concluded that an image size requirement based on the 5 minutes of arc recommendation from the Satoh research would be the most appropriate to address the safety risk contemplated by Congress in the K.T. Safety Act.

[96] A minute of arc is a unit of angular measurement that is equal to one-sixtieth of a degree. The angle which an object or detail subtends at the point of observation; usually measured in minutes of arc. If the point of observation is the pupil of a person's eye, the angle is formed by two rays, one passing through the center of the pupil and touching the left edge of the observed object and the other passing though the center of the pupil and touching the right edge of the object.

[97] As discussed later in this document, a test procedure which takes a still photograph of the rearview image from the simulated eye point of the 50th percentile male driver was proposed in order to evaluate compliance of a rear visibility system with both the image size requirements discussed in this section and the field of view requirements discussed previously. The image size is then measured using an in-photo ruler as reference as detailed in the proposed regulatory text in the NPRM.

Comments

In response to the NPRM, the Advocates noted two concerns with the proposed requirements. First, the Advocates stated that the proposed requirements are not supported by the Satoh research as the proposed rule allows for an *average* of 5 minutes of arc over the three rearmost test objects instead of a minimum of 5 minutes arc for each test object that the Satoh research indicates would be the minimum necessary for a driver to perceive the displayed object. Second, the Advocates stated that the test procedure should take into account the different image sizes that may result from the different possible eye points of different drivers such as the 95th percentile male and the 5th percentile female.

Separately, MEMA noted in its comments that the 5 minutes of arc standard is based on a study that assumes drivers possess 20/20 vision. Since most states allow persons to obtain driver's licenses with 20/40 vision, MEMA suggested that the final rule should require greater image size. Supporting MEMA's concerns, Delphi added that the requirement should be amended to 10 minutes of arc.

Finally, Ms. Kathleen Hartman commented that the display location should be near the back window so that a driver is able to both look backwards and look at the display simultaneously. However, both Gentex and Brigade expressed an opinion against regulating the location of the rearview display. Gentex reasoned that, since drivers are accustomed to viewing the rearview mirror during and before backing maneuvers, the rule should not preclude manufacturers the option to place the rear visibility system's display in the rearview mirror that may increase the likelihood that drivers would utilize such a system.

Agency Response

The agency has considered all the comments presented and continues to believe that the requirements and test method proposed in the NPRM for image size are most appropriate for today's final rule. We do not agree with the Advocates that an image size requirement which requires an average of 5 minutes of arc is not supported by the Satoh research. The test method, proposed in the NPRM and adopted by today's final rule, utilizes a still image camera to take a photograph of the rearview display with an in-photo ruler as reference. The visual angle subtended by the test objects is then calculated using information derived from the in-photo ruler, the distance between the camera and the rearview image, and the formula provided in the regulatory text. As the Satoh research concluded that an object must subtend to at least 5 minutes of arc in order for a person to make judgments about the object, today's final rule requires that test objects A, B, and C be displayed at an average subtended angle of no less than 5 minutes of arc. In response to the Advocates' comment on the averaging method, the agency does not anticipate large differences in the actual apparent size of the three furthest objects, nor do we anticipate any individual test object having an actual apparent size significantly less than 5 minutes. Thus, we adopt in today's final rule the requirements and test method proposed in the NPRM as there is data to indicate that a minimum subtended angle of 5 minutes of arc would yield greater safety benefits than an average subtended angle of 5 minutes of arc.

Considering the Advocates' request to establish apparent image size requirements for both a 95th percentile male as well as a 5th percentile female, we conclude in today's final rule that such a requirement would increase compliance costs without any significant benefit to safety. The agency previously explored this issue by calculating a simple mirror and seat configuration. We found that the subtended angle calculation does not vary greatly with the driver's seated height. In the configuration calculated by the agency, with a mirror height of 31.5 inches above the driver's seat and a 24 inch nominal distance to the driver's eye, the difference between a 5th percentile female and a 95th percentile male apparent image size was only 0.03 minutes of arc for a nominal apparent image size of 5 minutes arc. As requiring manufacturers to certify compliance to varying driver seating positions would increase costs without providing any significant safety benefit, this final rule continues to use the single measurement location close to the 50th percentile male which is intended to best approximate the eye points of most drivers.

As the agency was conscious of the existence of both in-mirror and in-dash rearview displays, our intent in the NPRM was to afford manufacturers the flexibility to place the rearview display in a location that is most appropriate for use by their customers. This final rule continues to allow flexibility with regard to the location of the display. We note the comments from Gentex which reasoned that drivers are most accustomed to viewing the rearview mirror during and before backing maneuvers. We also note Ms. Hartman's request that the agency require a display located such that the driver must look rearward. While the agency is not currently aware of data that show that a rear-mounted display or in-mirror display is the most appropriate location for the rearview image, today's final rule does not restrict these configurations. Consistent with our current rearview mirror requirements, today's final rule will exclude head restraints as an obstruction to the rearview display in the test procedure. Through this limited exclusion, we acknowledge the possibility that manufacturers may wish to utilize rear-mounted displays. While we note the separate safety benefit that is afforded by the head restraints required in FMVSS No. 202 and 202a, we believe that a driver who is looking rearward will move in such a way as to avoid the head restraint as an obstacle in his or her view a rearview display.

Finally, the agency declines to raise the minimum requirement that objects subtend to an angle of 5 minutes of arc as suggested by MEMA and Delphi. While the agency acknowledges that states allow drivers that do not have 20/20 vision to operate motor vehicles, we also recognize that these furthest locations and apparent image sizes will increase as the vehicle moves closer to them. Further, as mentioned above, the agency is interested in ensuring that certain display locations (such as the rearview mirror) are not precluded as an option for compliance. As an increased image size requirement (such as the 10 minutes of arc suggested by Delphi) would require a significantly larger display (which can preclude a manufacturer from installing an in-mirror rear visibility system), we believe that such a requirement is unnecessarily design restrictive without yielding significant benefits to safety. Therefore, today's final rule adopts image size requirements which remain unchanged from those proposed in the NPRM.

f. Test Procedure

In the ANPRM, NHTSA suggested that the test procedure currently utilized in FMVSS No. 111 for evaluating compliance of school bus mirrors could be modified for the purposes of this rule. Such a procedure would set up a still photography camera such that its imaging sensor is located at the eye point of a 50th percentile male. A photograph would be taken of the test objects as they are presented in the rearview image via the rear visibility system display. This photograph would then be used to assess the compliance of the rear visibility system.

The NPRM tentatively concluded, as suggested in the ANPRM, that an adapted version of the school bus mirror test in FMVSS No. 111 would be appropriate for evaluating compliance with this rule. In order to develop an objective and repeatable test, the proposed test procedure established additional elements of the test such as an ambient light condition, vehicle load test conditions, a driver seating position, and a ''test reference point'' to determine the location of the still imaging sensor. This proposed test procedure was designed to evaluate compliance with not only the field of view requirements but also the image size requirements of the proposed rule. The proposed regulatory text in the NPRM specified the instructions on how to conduct the proposed test. However, the commenters on the NPRM had various concerns regarding the proposed test procedure.

Test Reference Point

In the NPRM, we proposed to establish a ''test reference point'' which would simulate the eye point (eye location) of a 50th percentile male. In the ANPRM, NHTSA requested comment as to the appropriateness of utilizing the eye point of the 50th percentile male as not only the test reference point for evaluating compliance of a rear visibility system, but also as a reference point for measuring a vehicle's rear visibility without an additional rear visibility system.[98] In response to the ANPRM, commenters offered a variety of suggestions. General Motors suggested this rule apply a requirement consistent with the rear visibility requirements already existing in FMVSS No. 111 and utilize the 95th percentile eye-ellipse during the test procedure. Similarly, Nissan recommended that the rule adopt the eye ellipse method from SAE Standard J941 (which was incorporated by FMVSS No. 104 and also FMVSS No. 111). Further, the Alliance recommended that the eye reference points for this rule be harmonized with the equivalent standards from ECE R.46. Separately, Sony and the Consumers Union suggested the agency include tests for the other scenarios such as the 5th percentile female or the 25th percentile female. However, Honda cautioned that including multiple eye reference points may unduly increase costs, especially for evaluating mirror-based countermeasures.

The NPRM tentatively concluded that a test reference point simulating the eye point of the 50th percentile male driver is the most appropriate for this rule. Using the anthropometric data from a NHTSA-sponsored study of the dimensions of 50th percentile male drivers seated with a 25-degree seat-back angle (''Anthropometry of Motor Vehicle Occupants'' [99]), the NPRM proposed specifications for the left and right infraorbitale (a point just below each eye), the head/neck joint center at which the head rotates about the spine, the location of the center of the eye in relation to the infraorbitale, and the point in the mid-sagittal plane (the vertical/longitudinal plane of symmetry of the human body) of the driver's body along which the forward-looking eye mid-point can be rotated. All of these specifications were given in relation to the hip location of a driver in the driver seating position (the H point). For a further discussion of these specifications, please reference the NPRM.[100]

Using these specifications, the NPRM proposed a test procedure whereby an initial forward-looking eye midpoint of the driver (M_f) is located 632 mm vertically above the H point and 96 mm aft of the H point. Further, the proposed procedure located the head/neck joint center (J) 100 mm rearward of the forward-looking eye midpoint and 588 mm vertically above the H point. A point of rotation (J_2) would then be determined by drawing an imaginary horizontal line between the forward-looking eye midpoint (M_f) and a point vertically above the head/neck joint center (J). Finally, the proposed test procedure would locate the test reference point (M_r) by rotating the forward-looking eye midpoint about the aforementioned point of rotation until the straight-line distance between test reference point and the center of the visual display reaches the shortest possible value. The locations of these points are visually represented in Figure 2.

BILLING CODE 4910–59–P

[98] In the ANPRM, the agency also considered whether or not this rulemaking should limit the application of the rearview countermeasure to vehicles with a blind zone larger than a certain threshold. In that situation, the measurement of the vehicle's rear blind zone size would have also required a ''test reference point'' to determine the applicability of the rule. Thus the ANPRM solicited comments on the test reference point for both contexts. While many of the comments to the ANPRM in regards to the test reference point were in the context of evaluating the rear blind zone threshold, these comments are relevant to the more narrow discussion regarding the appropriateness of the proposed test reference point for evaluating compliance of the rearview countermeasure itself.

[99] Schneider, L.W., Robbins, D.H., Pflüg, M.A. and Snyder, R.G. (1985). Anthropometry of Motor Vehicle Occupants; Volume 1—Procedures, Summary Findings and Appendices. National Highway Traffic Safety Administration, DOT 806 715.

[100] 75 FR 76232.

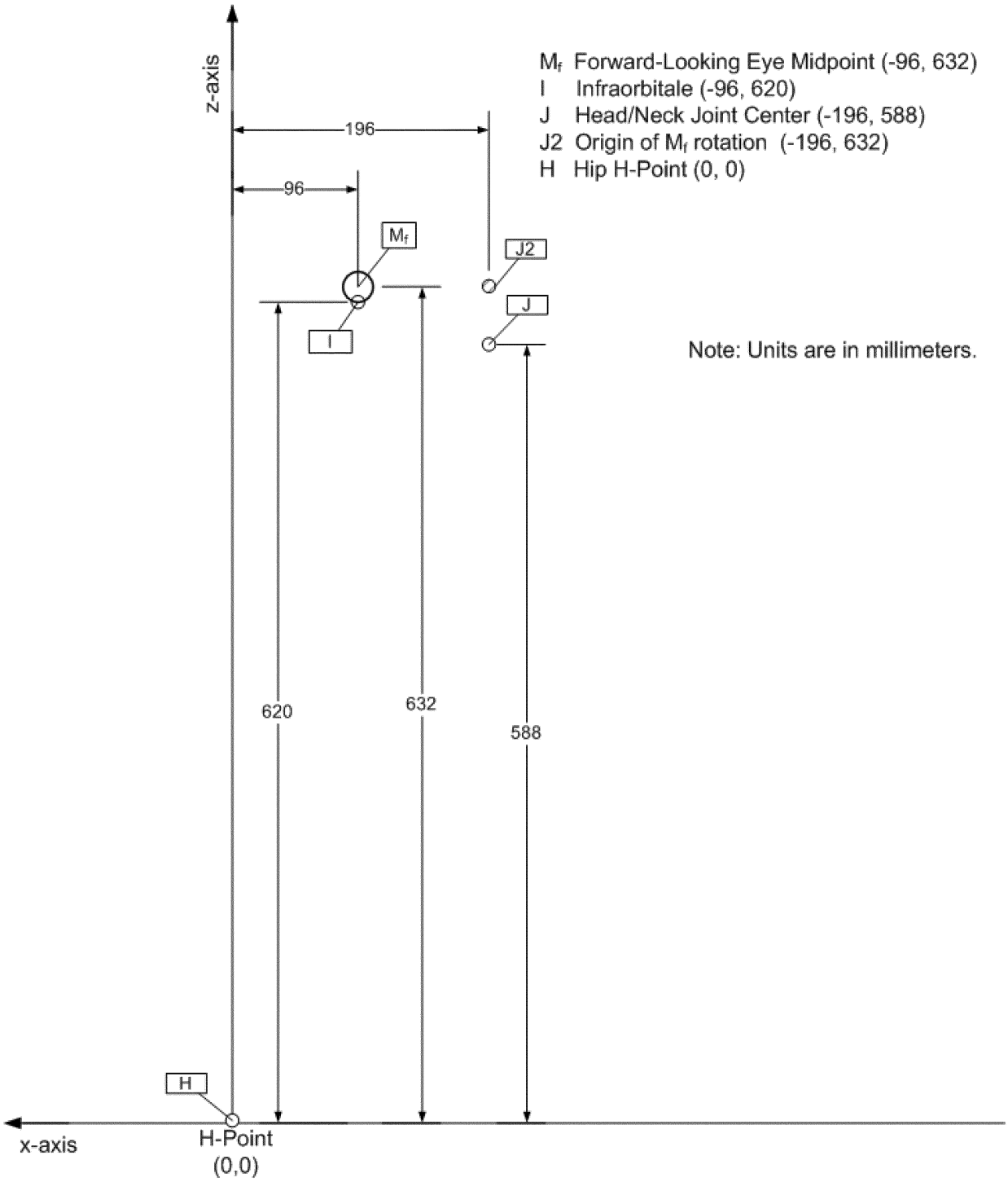

Figure 2. Coordinates of the Forward-Looking Eye Midpoint and Joint Center of Head/Neck Rotation of a 50th Percentile Male Driver with respect to the H point in the Sagittal Body Plane

BILLING CODE 4910–59–C

Comments

In response to the NPRM, the agency received comments requesting that the values proposed in the test procedure be harmonized with other test procedures already utilized in other FMVSSs. The Alliance noted that while the forward looking eye midpoint of the driver (M_f) is located 632 mm vertically above the H point in the proposed rule, FMVSS No. 104 references a horizontal plane 635 mm vertically above the H point. In order to increase consistency across the various standards, the Alliance requested that the final rule place the forward looking eye midpoint of the driver (M_f) 635 mm above the H point. Toyota's comments also expressed support for the Alliance comments on this issue.

Agency Response

After reviewing the comments from Toyota and the Alliance, we agree that the requirements of FMVSS No. 104 and

today's final rule should be harmonized. We note that, as the requirements for other regulated equipment in FMVSS No. 111 incorporate the eye point defined in FMVSS No. 104, utilizing the eye point from FMVSS No. 104 would have the effect of harmonizing the agency's test procedures across FMVSS No. 111. The 632 mm eye point referenced in the proposed rule was established using an eye point for the 50th percentile male driver. As previously noted in our discussion on image size, the agency has analyzed the sensitivity of moving the eye point for testing purposes. Our calculations found that the difference between a 5th percentile female and a 95th percentile male apparent image size was only 0.03 minutes of arc for a nominal apparent image size of 5 minutes arc. Based on that analysis, we believe that a 3 mm testing height modification from the requirements proposed in the NPRM does not have any significant impact on the test results. As such a modification would decrease the complexity of compliance with FMVSS No. 111 as a whole, we agree with the Alliance and Toyota that an eye height of 635 mm above the H point is most appropriate for today's final rule.

Measurement Procedure Camera Positioning

In the NPRM, we also proposed a measurement procedure which located a 35 mm or larger format still camera, video camera, or digital equivalent such that the center of the camera's image plane is located at point M_r (as defined above in our discussion of the test reference point). The test procedure further instructed that the camera lens be directed at the center of the visual display's rearview image.

Comments

Two concerns were raised during the technical workshop in regards to this procedure. First, the Alliance requested clarification as to what constitutes the image plane in the camera. Second, the Alliance also recommended that the agency set a test condition regarding the position and orientation of the rearview mirror during testing. Such a condition would ensure that when the camera lens is directed to the center of the visual display's rearview image, a rearview mirror mounted display would also be facing the camera in the test procedure.

Agency Response

In response to the Alliance's first concern regarding the image plane, we note that the image plane is the film or sensor location within the camera used pursuant to this test procedure. This clarification is consistent with the manner in which agency has conducted the test procedure for school bus mirrors in FMVSS No. 111. In response to the Alliance's second concern, we agree that for adjustable displays such as in-mirror displays, there may be various possible orientations which could affect the measurement of the image size and field of view through the camera used in the test procedure. Thus, we have clarified in the test procedure in today's final rule that an adjustable display will be adjusted such that it is normal to the vector established by points M_r and J_2 or as close to normal as the adjustment mechanism will permit if the range of adjustment will not allow the display to be positioned normal to the vector established by M_r and J_2. This additional specification will ensure that any adjustable rearview display will be oriented such that it is facing the camera used pursuant to this test procedure.

Driver Seating Position

In the ANPRM, we noted that the driver vertical seating position recommended by manufacturers for agency crash tests is generally at the lowest adjustable position. We requested comment on whether this adjustment position would be suitable for the 50th percentile male. In response, Nissan, General Motors, and the Alliance indicated that their comments on the ANPRM regarding the test reference position were also applicable in regards to driver seating position. Honda also reiterated its concern that a regulation accommodating varying driver sizes would increase costs, especially when applied to mirror-based countermeasures.

After considering these comments, the NPRM proposed a driver seating position which utilized the recommendation from the ANPRM that the driver seating position be adjusted to the lowest possible vertical setting. In order to add clarity, the NPRM also proposed to adjust the driver seat position to the midpoint along its longitudinal adjustment range. Finally, the NPRM also proposed that a three dimensional SAE J826 (rev. Jul 95) manikin be used to adjust the driver seat back angle to 25 degrees.

Comments

In its comments on the NPRM, the Alliance suggested that the Driver Seating Position condition in the proposed test procedure be harmonized with the test procedure in FMVSS No. 208. Specifically, the organization requested that the test procedure specify the seat back angle be adjusted to the ''nominal design riding position'' recommended by the manufacturer. It further recommended that the agency clarify that if no midpoint exists in the longitudinal adjustment range, the closest adjustment position to the rear of the midpoint should be used. These suggestions were supported by both Toyota and Volkswagen.

Agency Response

The agency has considered these comments on the driver seating position. However, we decline to adopt the nominal seating position test condition as proposed by the Alliance in today's final rule. Unlike in FMVSS No. 208, we believe it is necessary to specify the seating position in FMVSS No. 111 because these standards address different safety concerns. While FMVSS No. 208 regulates crash protection, FMVSS No. 111 regulates rear visibility. Unlike in FMVSS No. 208, minor variations in the seating position can significantly affect the eye point used to evaluate compliance with the requirements of today's final rule (particularly with respect to the possibility that certain interior features of vehicle cabin can become obstacles between the specified eye point in the test procedure and the rearview image). Because the seating position is an important condition which can significantly affect the test results, the agency does not believe it is appropriate to allow manufacturers to certify using a nominal seating position (defined by the manufacturers) in this rule. To evaluate compliance using the nominal seating position in this rule would introduce a variable into the test procedure which may affect the objectivity and repeatability of the test procedure. Thus, today's final rule does not adopt a nominal seating position test condition as requested by the commenter.

However, we agree with the Alliance that the regulatory text should clarify the longitudinal adjustment setting of the driver seat should no adjustment position exist at the exact longitudinal midpoint. We agree with the Alliance's recommendation that in this situation, the closest adjustment position to the rear of the longitudinal midpoint should be used. Thus, today's final rule adjusts the regulatory text accordingly in paragraph S14.1.2.5.1.

Lighting Conditions

In the ANPRM, NHTSA requested comment on possible lighting conditions that could be used during the test procedure. In response to the ANPRM, KidsAndCars.org and Rosco commented that the rear visibility

systems should be required to work during nighttime conditions. General Motors and Sony also offered different low-light ambient lighting conditions such as 3 and 5 lux but recommended that the vehicle's reverse lights be activated during the test. Finally, the Automotive Occupant Restraints Council recommended that the test condition specify a minimum and maximum ambient light condition that simulates daytime driving conditions. The NPRM tentatively agreed with the Automotive Occupant Restraints Council. We reasoned that since 95 percent of the SCI backover cases occurred during daytime conditions, conducting the compliance test in a worst-case nighttime condition may be an unnecessarily challenging requirement relative to real world conditions. Thus, we proposed in the NPRM an ambient lighting condition of 10,000 lux and proposed that the ambient lighting condition be measured at the center of exterior surface of the vehicle's roof.

Comments

In response to the NPRM, the Consumers Union, the Advocates, and KidsAndCars.org suggested the agency adopt lighting conditions that are intended to simulate nighttime conditions. KidsAndCars.org commented that in approximately 30% of backover incidents that they have reviewed, the backover incident occurred during nighttime lighting conditions. Thus, these organizations suggested that it is necessary to specify the test conditions to reflect low-light conditions.

On the other hand, Global Automakers commented that because the majority of backover incidents occur during daytime conditions which can vary from 10,000 lux to 100,000 lux, automakers should have the option of setting the ambient lighting conditions to above 10,000 lux during testing. Honda requested that the agency set a tolerance level in order to allow for consistent and repeatable testing. Separately, Global Automakers requested clarification in the technical workshop as to how the agency would measure the ambient lighting condition at the center of the exterior surface of the vehicle's roof if the vehicle is designed with a removable roof panel or convertible top.

Agency Response

While we acknowledge the concerns expressed by the advocacy groups regarding the performance of rear visibility systems under low light conditions, we do not specify (in today's final rule) low light test conditions which would establish minimum requirements for low light performance of rear visibility systems. As noted in the NPRM, the vast majority of the SCI cases reviewed by the agency occurred during daylight hours. Accordingly, the proposed rule in the NPRM did not include provisions regulating performance under night time or low-light testing conditions. While we acknowledge that approximately 30% of the cases reviewed by KidsAndCars.org occurred during night time hours, the data still demonstrate that a large majority of backover crashes occur during daylight hours. We also note that the agency currently requires backup lamps on all the vehicles covered by today's final rule. FMVSS No. 108 contains various minimum photometric intensity requirements depending on the angle in which measurement is taken. For the downward angles (angles pointing towards the ground), the minimum requirements can range between 30 candela and 160 candela. While we acknowledge that these lamps do not provide the same lighting conditions as normal daylight conditions, we believe that these lamps will augment the ability of rear visibility systems to successfully detect pedestrians behind the vehicle.

Finally, we note that the current test procedure has been designed for daytime conditions and might not be objective if it were performed under low light conditions because the view of each test object's visibility would be less clear. In other words, under low light conditions, the current test procedure does not offer a clear and objective method for distinguishing between rear visibility systems that can sufficiently display the required portions of the test objects (under low light conditions) from those that cannot. Without additional research, the agency is currently unaware of a test procedure that it can use to determine objectively the sufficiency of the view of the required portions of the test objects in low light conditions. Thus, we decline to adopt a low-light testing condition as requested by KidsAndCars.org in today's final rule.

However, even though the agency is unable to establish minimum low light performance standards for rear visibility systems in today's final rule, we expect that manufacturers will design their rear visibility systems so as to afford their customers the reasonable ability to utilize this important safety equipment under a variety of lighting conditions. In addition, the agency plans to monitor the rear visibility systems utilized to meet the requirements of today's final rule and will initiate additional rulemaking to establish minimum low light performance requirements for rear visibility systems should additional requirements become necessary in the future.

Separately, the agency declines to adopt the recommendations of Global Automakers and Honda to allow for a lighting tolerance above 10,000 lux. While we agree that lighting conditions under the sun can be as bright as 100,000 lux, such a testing condition would be impracticable to achieve in a lab testing environment. However, we do agree with the commenters that the lighting condition should allow the testing facility a level of tolerance. We believe this is appropriate in order to reduce the burden of requiring such precision in this test condition and do not believe that this change will have any practical impact of the results of the test. Thus, we have modified the regulatory text in today's final rule to allow for a range of lighting conditions between 7,000 lux and 10,000 lux in order to simulate dim daylight conditions which can be achieved in a test laboratory setting.

Finally, we acknowledge Global Automaker's inquiry regarding the measurement procedure for the ambient lighting for vehicles with removable roof panels or convertible tops. In response, we note that the ambient lighting test procedure would assume that such roof panels or convertible tops are in place so that the measurement of the ambient lighting condition can be measured from the center of the exterior surface of the vehicle's roof.

Other Vehicle Test Conditions

In addition to the test reference point, driver seating position, and lighting conditions, the NPRM also proposed other test conditions to ensure test repeatability. These conditions specified that the vehicle tires be inflated to the manufacturer's recommended cold inflation pressure, the fuel tank is full, and that vehicle is carrying the simulated weight of the driver and four passengers. The weight of each driver or passenger is simulated at 68 kg in the NPRM with 45 kg being loaded in the seat pan and 23 kg on the floorboard.

Comments

In its comments on the NPRM, the Alliance noted that the proposed vehicle loading test conditions in the proposed rule differed from the loading conditions for the other requirements in FMVSS No. 111. The Alliance recommended that, given the minimal impact that these loading conditions will have on the field of view

measurement, the loading requirements should be harmonized for both the rearview mirror and rearview camera tests at simply the average occupant weight of 68 kg. In addition, the Alliance requested clarity during the technical workshop in regards to how the vehicle would be loaded if there are more than 5 designated seating positions.

Separately, Honda expressed concern in its comments that no vehicle testing condition is specified in regards to the positioning of vehicle openings such as hatches and doors. As openings (such as hatches) may contain rearview cameras, Honda requested that the regulatory text specify that the hatches and doors of the vehicle are closed during the test procedure.

Agency Response

Considering the Alliance's comment concerning the occupant weight, the agency notes that the weight distribution may not be critical in many vehicle configurations. However, we are concerned that in some cases it may impact the vehicle's pitch in a way that alters the outcome of the visibility test. Unlike the mirror requirements of FMVSS No. 111, today's final rule does not require the rear visibility system to be adjustable in the horizontal and vertical direction, therefore the potential impacts of vehicle pitch because of weight is more critical than in the mirror provisions of FMVSS No. 111. Furthermore, the agency believes that splitting the weight about the seat and floor pan more accurately simulates an actual vehicle occupant. Accordingly, we decline to amend the vehicle loading requirements as requested by the Alliance.

However, we agree with the Alliance that the loading conditions proposed in the NPRM did not clearly state how the vehicle would be loaded if a vehicle has more than 5 designated seating positions. Thus, we have amended the regulatory text in today's final rule to specify that when a vehicle has more than 5 designated seating positions, the 68 kg weights simulating each of the five occupants shall be placed in the driver's designated seating position and any other available designated seating position in the vehicle.

We also acknowledge Honda's concern that the vehicle test condition does not specify that all the vehicle doors and hatches must be closed during the test. We agree with Honda that many rear visibility systems may have exterior components which collect the rearview image from a source mounted on a rear hatch or trunk lid. We further agree that opening or closing these trunk lids or rear hatches have the potential to affect test results for compliance purposes. Therefore, we are specifying in the test procedure in today's final rule that rear trunk lids and hatches are closed and latched in their normal vehicle operating state during the test.

Display Obstructions

In addition to the aforementioned concerns, Global Automakers and Honda expressed concern in their comments that certain vehicle interior design features may obscure the rearview display during testing.

Comments

Honda explained in its comments that they have designed rearview displays that are placed some distance behind a protective transparent cover. It requested clarification on how measurements of such images displayed in these screens would be accomplished. Also expressing this concern, Global Automakers commented that the test procedures specify these protective covers be removed during testing. Further, Global Automakers also requested clarification as to whether or not dashboard intrusions, which may partially obstruct the view of the display screen from the perspective of the testing view point, would affect the compliance of the view screen.

Agency Response

In order for today's final rule to be effective, it is necessary for the driver of the vehicle to see the required portions of the test objects in the rearview image. We define visibility based on a picture taken of the rearview image, at a defined point which approximates the eye point of a 50th percentile male driver, showing various test objects located behind the vehicle. If this view is obstructed by vehicle equipment (such as dashboard intrusions), the ability for the driver to detect objects behind the vehicle may be compromised. While we acknowledge that drivers are able to adjust their head position in order to accommodate certain small obstructions, this rule establishes at least a central location that is free of obstructions so that most drivers will be able to easily adjust their head (if needed) in order to see the entire rearview image. Thus, today's final rule makes no special accommodation for dashboard intrusions that obscure portions of the rearview image. The required portions of the test objects, as shown in the rearview image, must be visible to the driver from the eye point defined in the test procedure.

Finally, we acknowledge Honda's concern that certain rearview displays may be placed behind transparent covers that may affect the ability to affix a ruler to the rearview display as described the test procedure. Depending on the specific situation, we note that it may be necessary to remove the transparent cover or use an alternative method to obtain the measurement of the subtended angle. The agency believes that, as long as the measurement of the subtended angle is valid, accommodating rear visibility systems with transparent covers over the rearview display in the performance of the test will not alter the test results.

g. Linger Time, Deactivation, and Backing Event

As part of the agency's effort to ensure the rearview image presents the required field of view at the appropriate time, the agency has explored the possibility of restricting when the rearview image may be displayed. In the ANPRM, the agency noted that a maximum linger time (which discontinues the rear view display after a certain period of time) may be desirable in order to prevent driver distraction. However, the ANPRM also expressed our concern that some linger time may be desirable in certain instances where frequent interchange between reverse and forward directions are common (such as during trailer hitching or parallel parking). Thus, the agency tentatively suggested a linger time requirement of not less than 4 seconds but no greater than 8 seconds.

During the comment period for the ANPRM, commenters raised a variety of suggestions for an appropriate restriction on image linger time. Nissan suggested that there is little utility for extending the linger time greater than 200 milliseconds whereas General Motors suggested an image linger time of 10 seconds or a speed based limit of 5 mph. The Alliance, on the other hand, suggested 10 seconds or 20 kph (12.4 mph). Further, both General Motors and the Alliance commented that a maximum linger time would address the agency's concern and that it is not necessary to specify a minimum time. In considering these comments, the agency agreed that a maximum linger time would sufficiently address NHTSA's safety concern and that a minimum linger time requirement is not necessary. Accordingly, we noted the commenters' findings based on actual driving data and proposed in the NPRM a maximum linger time of 10 seconds.

In addition to the linger time requirement, we proposed in the NPRM a deactivation restriction. This

requirement was designed to ensure that the safety feature required by this rule would not be permanently or accidentally disabled. Thus, in addition to the maximum linger time requirement, the proposed regulatory text in the NPRM stated that the ''rearview image shall not be extinguishable by any driver-controlled means.''

Comments

Vehicle and equipment manufacturers expressed various concerns regarding these two proposed requirements. The first concern was expressed primarily by the vehicle manufacturers in regards to only the linger time requirement. In their comments, the vehicle manufacturers asked for flexibility in the manner in which they can approach the maximum linger time requirement. Similar to its comments on the ANPRM, the Alliance requested that manufacturers be afforded three linger time requirement options: (1) A time based option of 10–15 seconds, (2) speed based option of 5–10 mph, and forward travel distance based option of less than 10 meters. The organization contended that manufacturers need the ability to set the linger time that is appropriate for the consumer expectations for each specific type of vehicle. Other manufacturers also requested that the agency adopt variations of the Alliance recommendation. BMW suggested a 10 mph, 10 seconds, or 10 meters linger time requirement, whereas Mercedes-Benz requested a linger time of up to 15 seconds in order to accommodate its current system designs.

The second concern is expressed by both vehicle and equipment manufacturers with regard to both the proposed linger time and deactivation restrictions. In general, the commenters expressed concern that the deactivation and linger time restrictions could function to prohibit designs which include camera/video features other than the field of view required by this rule. For example, the Alliance and Sony suggested that the proposed rule could preclude manufacturers from offering certain additional views such as ''trailer tow zooming'' and ''top view'' displays. To address this, both recommended that the standard require the video display default to a FMVSS No. 111-compliant view, but afford the option to the driver of manually switching the view. Additionally, Global Automakers and Honda were concerned that the deactivation requirement could preclude driver controlled overlays on the screen. They contended that some of these elements need to be displayed concurrently with the rearview image in order to properly afford the driver the ability to adjust various aspects of the rearview display (such as screen brightness and contrast). Volkswagen also commented that the deactivation requirement would prohibit visual display screens that can be pushed back into a stow position that are not visible to the driver. Finally, Sony commented that the maximum linger time could preclude views such as a 360-degree view which drivers may wish to use while the vehicle is in motion to enhance situational awareness.

Separate from the aforementioned main concerns, the agency also received comments questioning the appropriateness of these requirements in this rule. First, Honda's comments suggested that the linger time should not be a requirement because the rearview image is no more distracting than a simple rearview mirror and further requested that any linger time requirement not affect the driver's use of other camera features. Sony expresses a similar concept stating that the linger time requirement does not advance the goals of this rulemaking because the requirement is focused on preventing driver distraction as opposed to increasing rear visibility. Additionally, Rosco contended that NHTSA should exclude commercial vehicles from the linger time requirement because those vehicles may utilize the camera for lane changing safety and other uses. And finally, Brigade expressed agreement in its comments with NHTSA's analysis that a minimum linger time would not be necessary as it would restrict designs that would alter the view displayed after the vehicle direction selector is shifted away from reverse.

Agency Response

After reviewing the comments, we agree with the arguments advanced by many commenters regarding the need for increased flexibility to accommodate different vehicle designs and additional camera functions. The agency remains concerned that the rearview image may become a distraction to drivers during forward driving maneuvers and that drivers may permanently or accidentally deactivate the rearview safety feature. However, the agency does not intend to preclude this design flexibility in today's final rule and believes that the following revisions appropriately balance our safety concerns with the commenters' request for design flexibility.

Thus, today's final rule addresses the concerns of the aforementioned commenters through establishing a ''backing event'' that would serve as the reference for the maximum linger time and deactivation requirements. Today's final rule includes an additional definition which defines a backing event as ''an amount of time which starts when the vehicle's direction selector is placed in reverse, and ends at the manufacture's choosing, when the vehicle forward motion reaches either; (a) a speed of 10 mph, (b) a distance of 10 meters traveled, or (c) a continuous duration of 10 seconds.'' In light of this new definition, today's final rule requires that within 2.0 seconds of the beginning of each backing event, a rearview image compliant with today's final rule must be displayed and that rearview image must not be displayed beyond the end of the backing event. However, today's final rule permits manufacturers to design the vehicle to enable the driver to manually select a different view during the backing event so long as the default view presented to the driver at the beginning of each backing event is compliant with the requirements of today's rule.

Since the agency agrees with both the Alliance and BMW that the appropriate end of a backing event can vary depending on the type of maneuvers anticipated to be performed in each vehicle model, we have established a ''backing event'' definition in today's final rule which affords such flexibility. Further, the agency does not anticipate the additional flexibility included in today's final rule to have a discernible impact on safety. We agree with the parking example from BMW's comment that the optional 10-meter limit is reasonable based on the likelihood that when vehicles travel forward at a greater distance than 10 meters, the driver's intention to park in a given spot has concluded. Likewise, the agency believes that in situations such as a trailer hitching maneuver, a driver whose speed has increased to 10 mph will have concluded that maneuver and should no longer be presented with this rule's required rearview image. After one of these limits has been reached, the backing event is finished. Therefore, if the transmission is then shifted to reverse, a new backing event is initialized and the rearview image defined in this rule must then be displayed.[101]

[101] We note that the requirement to show the FMVSS No. 111-compliant field of view *at the beginning of each backing event* differs from the test procedures used to assess the performance criteria for rearview video systems for the purposes of NCAP. As explained in the NCAP final decision notice, we verify conformity with the NCAP field of view criterion by assessing the initial view shown by the system after an ignition cycle. We

Considering the comments on additional views, the agency does not intend to restrict currently available alternative views such as ''top view'' and ''trailer mode'' or other potential views that may be developed in the future. Additionally, the agency recognizes that screen adjustments such as brightness and contrast are consistent with the goal of affording the driver a clear view behind the vehicle and may reasonably be overlaid on top of the required rearview image as long as they are manually activated by the driver. However, the agency does believe that the field of view defined by this final rule is vital to ensuring that drivers are able to avoid the backover crashes contemplated by Congress in the K.T. Safety Act. To reasonably balance this safety concern while still affording the aforementioned flexibility of design, today's final rule does not restrict manufacturers from providing a driver-controlled means by which the rearview image defined in this rule can be altered, provided that the vehicle displays the required rearview image at the beginning of every backing event.

On the other hand, the agency does not agree with Sony and Honda that this rule should not provide restrictions against excessive linger time. We do not agree that the rearview image display is no more distracting than a rearview mirror as an illuminated display has fundamentally different properties when compared to a mirror. For instance, the prolonged illumination of the required image at night would be particularly distracting when the vehicle is traveling forward. Furthermore, unlike mirrors required on passenger cars and trucks, the required field of view coverage under this rule does not provide useful information for the driver while the vehicle is moving forward. We also do not agree that driver distraction is not a proper concern of this rulemaking. As in every rule, NHTSA desires to be cautious and avoid situations that can potentially increase safety risks.

Finally, today's final rule also does not include an exclusion from the linger time requirement for commercial vehicles as requested by Rosco. Rosco requested this additional flexibility as it could be advantageous for certain vehicles such as small school buses, airport shuttles, or local delivery vehicles to constantly monitor the rear of the vehicle. While the rearview image defined in this final rule has been designed to enable a driver to detect pedestrians such as small children directly behind the vehicle during backing maneuvers, we have not evaluated the safety implications of using this rearview image in high speed forward moving situations as it was not part of the safety problem today's rule is designed to address. Further, as stated above, the agency desires to be very cautious not to increase safety risk by allowing this novel application of the rearview safety equipment. Therefore, today's final rule does not include any exclusion that would allow commercial vehicles to continue to display the required image after the end of a backing event.

h. Image Response Time

The agency has expressed concern that if the rear visibility system does not display the required field of view promptly, the safety benefit of this system will be reduced because drivers may begin backing maneuvers before the field of view is displayed. Thus, in both the ANPRM and NPRM, the agency has explored a response time requirement that would limit the amount of time that can pass between driver's selection of the reverse gear and the video screen display of the required field of view. The ANPRM requested comment on a possible resolution to this issue by suggesting a preliminary maximum response time of 1.25 seconds. After considering the comments on the ANPRM, the agency proposed a 2.0 second response time requirement in the NPRM.

In proposing the 2.0 second requirement, the agency cited two technological limitations that necessitated a longer maximum response time. First, the agency took note that both GM and Gentex indicated a need for additional tolerances for their systems to produce the required image in part because their systems conduct image quality control checks before displaying the image. Both manufacturers stated in their comments that a required image response time of 1.25 may adversely affect the image quality displayed.

Second, the agency noted that liquid crystal displays (LCDs) require time to warm-up before they can display an image and that this time may vary depending on the location of the visual display. The agency acknowledged that in-mirror displays (which are only activated when the reverse gear is selected) may require additional warm-up time when compared to in-dash displays (which may be already in use for other purposes such as route navigation). For these reasons, the proposed rule in the NPRM extended the image response time requirement. As the agency was not aware of any rationale that justified extending the response time requirement beyond 2.0 seconds, the agency stated that a 2.0 second response time would be appropriate.

Separately, the NPRM took note of the comments from the Advocates which recommended that vehicles be equipped with an interlock feature which would prevent the vehicle from reversing until the rear visibility system has fully initialized. The Advocates contended that this feature would ensure that drivers have the required field of view available when the driver commences the backing maneuver. In response to the Advocates' comment, NHTSA expressed concern that such a feature may cause annoyance with drivers. While we did not propose an interlock requirement in the NPRM, we requested comment on the merits of such a feature.

Comments

Generally, the advocacy groups have commented that the response time should be reduced. These groups share the agency's concern that if drivers are not quickly presented with the required field of view, they may begin their backing maneuvers without waiting for the rear view display. Therefore, the Advocates stated that the standard should require a 1.0 second maximum response time and require an interlock feature for vehicles that do not meet the 1.0 second requirement. Similarly, the Consumers Union suggested the agency adopt the 2.0 second requirement or a shorter technologically feasible response time and that we grant no allowance for system initialization. The Consumers Union noted that image response time can be significantly longer when the vehicle is first initializing.

Conversely, the manufacturers were generally concerned that the 2.0 second response time requirement proposed in the NPRM is too stringent when

made this decision in NCAP because we believed that prior to today's final rule (and during this rule's phase-in period) consumers would benefit from information on rearview video systems being listed as a ''Recommended Advanced Technology Feature'' even if these systems did not show the default view at the beginning each backing event. On balance, we believed that consumers would realize many benefits from systems that at least show the relevant field of view at the beginning of each ignition cycle and NCAP should recommend those systems to consumers. However, in light of the decision in today's final rule to accommodate manufacturers' prior system designs during the phase-in period (by delaying implementation of the performance requirements beyond the field of view), we believe it is appropriate for the long-term performance requirements to require the default view (that is compliant with FMVSS No. 111) at the beginning of each backing event. By using these slightly different approaches in NCAP and in today's final rule, we believe that the agency can maximize the value of information given to consumers in the short-term and the safety benefits of rear visibility systems in the long-term.

considered with the system initialization process. Global Automakers suggested that the 2.0 second response time is inappropriate for situations where the vehicle is shifted into reverse immediately after starting the engine. They contended that this is an abnormally quick process compared to real world conditions and recommended that the agency establish a test procedure where the vehicle is running for at least 10 seconds before shifting the vehicle into reverse and measuring the 2.0 second response time. Using similar reasoning, the Alliance and Volkswagen proposed a 3.0 second response time requirement when tested within 4–20 seconds of opening the driver side door. The Alliance and Mercedes-Benz also stated that this change is necessary in order to accommodate existing rear view systems, which have not been designed to meet the 2.0 second response time requirement. They cautioned that requiring the manufacturers to change these designs apart from the normal product cycle would significantly increase costs. On the other hand, Honda did not request any change to the response time requirement because their newer systems will be redesigned to meet the proposed requirement. Thus, they requested that the image response time requirement be delayed until the end of the phase-in period.

The equipment manufacturers generally stated in their comments that their products will be able to meet the proposed 2.0 second response time requirement. Magna stated that the proposed requirement in the NPRM ''appears to be both technically and practically achievable.'' However, Panasonic echoed the manufacturers' concerns by asking the agency to consider the initialization process, ambient conditions, and the drop in voltage experienced during engine crank start. On the other hand, Brigade cautioned that drivers may not wait for a delayed image and requested a 1.0 second response time requirement. Finally, Magna noted that the research conducted by this agency seems to indicate that drivers with video displays may wait for the display to appear before commencing the backing maneuver.

Additionally, the manufacturers and one supplier requested that the test condition for image response time specify an ambient room temperature in order to accommodate for response time variation due to temperature. Magna requested that the test condition for response time be set to 20 degrees Celsius +/− 5 degrees Celsius. On the other hand, Volkswagen and the Alliance recommended that the test condition be set to a temperature of 70 +/− 10 degrees Fahrenheit. During the technical workshop, the Alliance also recommended that the agency specify a test condition for the gear position for manual vehicles which could be initiated with the transmission in the reverse position.

Finally, in response to our request for comment on the merits of interlocks in the NPRM, Magna commented that drivers would view an interlock feature, which removes direct and immediate control from the driver, with ill-regard. The company stated that drivers often may need to reverse a vehicle quickly at a red light-controlled intersection in order to avoid being struck by a reversing vehicle in front which has unintentionally intruded into the intersection. The Alliance raised similar arguments by raising the concern that drivers may need to reverse quickly when conducting three-point turns in traffic. Further, the Alliance stated it is unaware of any practical methods of incorporating such an interlock into a vehicle without creating a danger of sudden acceleration as such a feature would create a disconnect between the driver's command and the vehicle response.

NCAP Request for Comments and Final Decision Notice

The agency also examined this particular issue in the context of updating NCAP to include rearview video systems. In the NCAP request for comments, the agency stated (in order to address the aforementioned concerns from manufacturers regarding the state of the vehicle prior to testing) its plan to use a vehicle conditioning procedure prior to assessing the NCAP image response time criterion. The procedure announced in the NCAP request for comments was as follows:

Image response time test procedure. The temperature inside the vehicle during this test is any temperature between 15 °C and 25 °C. Immediately prior to commencing the actions listed in subparagraphs (a)–(c) of this paragraph, all components of the rearview video system are in a powered off state. Then:

(a) Open the driver's door,

(b) activate the starting system using the key,[102] and

(c) place the vehicle in reverse at any time not less than 4 seconds after the driver's door is opened.

[102] We stated in our NCAP request for comments that the terms ''starting system'' and ''key'' have the same meanings that these terms have in FMVSS No. 114, *Theft protection and rollaway prevention. See* 49 CFR Part 571.114.

We intended this procedure to establish not only the state of the vehicle's rear visibility systems prior to testing, but also to establish the temperature conditions during the test. We believed that this procedure established an appropriate balance between ensuring that the view of the area behind the vehicle associated with the highest crash risk is available to the driver in a timely fashion and affording the vehicle manufacturers all reasonable design flexibility. We reasoned that a vehicle conditioning procedure lasting no less than 4.0 seconds would be appropriate because our naturalistic driving data [103] indicate that approximately 90% of drivers do not select the reverse gear to begin the backing maneuver less than 4.25 seconds after opening the vehicle's door.[104] In other words, only approximately 10% of the time drivers enter their vehicle and select the reverse gear in less than 4.25 seconds. Thus, we believed that a vehicle conditioning procedure that could test a vehicle in as little as 4.0 seconds after the beginning of the procedure would most closely mimic the vast majority of real world conditions.

In response to our NCAP request for comments, various manufacturers stated

[103] These data are information NHTSA prepared in support of the research report titled ''On-Road Study of Drivers' Use of Rearview Video Systems.'' *See* Mazzae, E. N., et al. (2008). On-Road Study of Drivers' Use of Rearview Video Systems (ORSDURVS), *supra.* A summary of these naturalistic driving data prepared for that study (as it pertains to the length of time drivers take to select the reverse gear) is available in Docket No. NHTSA–2010–0162–0227.

[104] The naturalistic driving data indicate that 90% of drivers did not select the reverse gear less than 4.25 seconds after the system began collecting data. The systems used in this study may have initialized as a result of triggers which can include the door opening, the door unlocking, or using the key fob. While the agency acknowledges that the system may have begun recording data before the door was opened, we continue to believe that approximately 90% of drivers did not select the reverse gear in less than 4.25 seconds. The agency believes that the time difference resulting from the different triggers would only affect the test results for drivers who took around 4.25 seconds to select the reverse gear because drivers taking significantly longer than 4.25 seconds to select the reverse gear most likely would not have selected the reverse gear in less than 4.25 seconds even if the system began recording data upon unlocking the vehicle door or using the key fob. The agency further believes that, for drivers that take around 4.25 seconds to select the reverse gear, the data recording must have been initialized while the driver was very close to opening the vehicle door in order for the driver to complete all the tasks required in order to start the vehicle engine and select the reverse gear in around 4.25 seconds. Thus, while the data from the naturalistic study indicate that 90% of drivers selected the reverse gear not less than 4.25 seconds after the system began recording data and not after the driver opened the door, we continue to believe that approximately 90% of drivers selected the reverse gear not less than 4.25 seconds after opening the door.

a need for a maximum vehicle conditioning procedure time. They explained that vehicles are often designed to power down their electronic systems after a certain amount of time has elapsed. For example, GM recommended a maximum procedure time of 60 seconds and Ford recommended a maximum time of 5 seconds. We agreed in our NCAP final decision notice with the commenters that the vehicle conditioning procedure should have a maximum time limit. We therefore established a maximum test procedure time of 6.0 seconds. When we designed the vehicle conditioning procedure, we intended to test the system as closely to 4.0 seconds as possible to mimic real world driving conditions. Thus, in order to establish a practical test that clearly defined the conditions under which the system would be tested, we stated that the rearview video systems in NCAP would be assessed after the vehicle was conditioned according to the conditioning procedure that lasted between 4.0 to 6.0 seconds.[105]

Agency Response

We share the advocacy groups' concerns that drivers may begin their backing maneuvers without the benefit of the rear visibility system if they are not presented with the rearview image quickly enough. As we discussed in our analysis of SCI cases involving rearview video systems, the 2013 case involving a BMW X5 demonstrated the importance of having a response time requirement that is as stringent as technologically feasible. If the response time of vehicle's rear visibility system had been longer in that case, it is possible that the injuries to the pedestrian would have been more severe.

However, we are unable to reduce the response time below 2.0 seconds in today's final rule for a variety of reasons. First, we believe that to reduce the response time requirement below 2.0 seconds would unnecessarily restrict potentially safety-beneficial alternatives. When we consider both in-dash and in-mirror displays, we believe the current state of technology does not seem to be able to consistently achieve a response time of less than 2.0 seconds. Because in-mirror displays are generally not designed to be used for other purposes such as navigation or infotainment applications, in-mirror displays generally are only powered when the rearview image is required. Using currently available technology, it does not seem feasible for these displays to power up and display the required field of view in less than 2.0 seconds. However, as the agency is aware of the possibility that in-mirror displays may be a more natural location for certain drivers or vehicle types and such systems may have a shorter initialization time than in-dash displays, we believe it is not in the interests of safety to establish a response time requirement which would preclude this type of display.

Second, the data show that approximately 95% of drivers do not begin backing the vehicle until at least 1.0 second has elapsed after the vehicle has been placed into reverse.[106] Thus, for the vast majority of drivers, the rearview image will be available in less than one second after the driver is ready to begin the backing the vehicle. As the naturalistic driving data available to the agency currently reflect the behavior of drivers that are accustomed to backing without the assistance of the rear visibility system or viewing the rear visibility system as a convenience feature rather than a safety feature, the agency believes that it is reasonable to anticipate that, through further incorporation and driver education regarding rear visibility systems, drivers will become accustomed to waiting an additional (less than) 1.0 second for the rearview image to appear. While we encourage manufacturers to drive the rear visibility system image response time to a minimum, as well as to educate their customers regarding the proper use of this important safety feature, to require a response time below 2.0 seconds would unnecessarily restrict rear visibility systems from using in-mirror displays. Therefore, after considering all of these factors, today's final rule adopts the proposed requirement from the NPRM which requires that the rearview image be displayed within 2.0 seconds[107] of the start of a backing event.[108]

However, in regard to initialization time, the agency recognizes that for compliance testing purposes it is important to establish the state of the vehicle prior to the transmission being shifted into reverse. We acknowledge the difficulties noted by the manufacturers that the system initialization process may impede the ability of the rear visibility system to display the required rearview image within 2.0 seconds. We further note the aforementioned naturalistic driving data that indicate that approximately 90% of drivers do not select the reverse gear to begin the backing maneuver less than 4.25 seconds after opening the vehicle's door. Thus, we believe that the NPRM, which would have required the 2.0 second response time regardless of vehicle state, did not fully account for real world driving situations that provide time for the vehicle's rear visibility system to initialize.

However, we decline to adopt the specific recommendations from the manufacturers as they do not reflect real world driving conditions as reflected in

[105] In addition, we note that the NCAP final decision notice and the accompanying test procedure document also added clarifying details to the test procedure. It established: (1) A minimum width that the driver door should be opened (234 mm—or 9.2 in—the width of a 50th percentile male's chest); (2) that driver door is considered open at the "first detected movement when the door edge of the driver's door is no longer flush with the exterior body panel at the B-pillar;" and (3) that the driver door is shut afterwards.

[106] Mazzae, E. N., et al. (2008). On-Road Study of Drivers' Use of Rearview Video Systems (ORSDURVS), *supra.* Our data analysis currently does not enable us to conclude how far drivers generally travel between the 1.0 second after some drivers start backing the vehicle and the 2.0 second response time requirement. To ascertain this information, we would need to consider not only the time at which drivers generally begin their backing maneuvers, but also the rate at which they accelerate their vehicles and the speed to which they accelerate. In our studies, we observed a variety of average backing speed (e.g., 3.3 ft/second and 1.5 ft/second in Studies 1 and 3, respectively). However, we do not have information that indicates at what rate drivers accelerate the vehicle. As the rate of acceleration is crucial towards understanding how much distance a driver generally covers in the first second of the backing maneuver, we do not believe the current data enable us to make any conclusions on this matter.

[107] We note that, in response to the NCAP request for comments, the Alliance commented (without any additional reasoning) that a 3.0 second response time is the most appropriate. Similarly, GM commented that a 2.5 second response time is needed to accommodate systems using integrated console displays (as opposed to in-mirror displays). They reasoned that integrated console displays would take longer to initialize than in-mirror displays. As we stated in our NCAP final decision notice, these comments did not compel the agency to change the 2.0 second response time criterion for the purposes of NCAP. We reiterated our concern that, even if a system shows the appropriate view of the area behind the vehicle at an appropriate size, the driver will not be able to avoid a crash if the system is not active when the vehicle is moving in reverse. We also restated that the 2.0 second image response time was proposed originally in the NPRM for this rulemaking to accommodate in-mirror displays that would take longer than integrated console display to initialize because they are not normally activated prior to the backing maneuver for other purposes (e.g., for infotainment or navigation functions). Without any reasoning to support why integrated console displays now require additional time beyond that of the in-mirror displays to initialize, we declined to extend the response time criterion for the purposes of NCAP. In addition, for the purposes of today's final rule, we believe the same facts continue to be true. Thus, we also conclude in today's final rule that 2.0 seconds is the appropriate response time.

[108] As discussed previously in this document, today's final rule establishes a backing event which begins when the vehicle is placed into reverse. Thus, altering the response time requirement to 2.0 seconds after the beginning of the backing event does not substantively change this requirement from the proposed rule in the NPRM.

the available data. While we note that manufacturers currently use various triggers to begin the initialization process, we believe that both the 10 second initialization condition recommended by Global Automakers and the 4 to 20 second initialization condition recommended by the Alliance is not appropriate for this safety equipment. As it does not seem reasonable to expect drivers to wait 10–20 seconds for rear visibility systems to initialize before commencing their backing maneuvers, following the manufacturer's recommendation would aggravate our safety concern that drivers may begin backing maneuvers before the rearview image is available.[109]

Thus, in an effort to address the aforementioned safety concern while not imposing a regulatory burden that does not reflect real world driving conditions, the agency is adopting the vehicle conditioning test procedure from the NCAP final decision notice that will condition the vehicle prior to the rearview image response time testing in section S14.2 of today's final rule. For the reasons we stated above (and in the NCAP final decision notice) we believe that the 4.0 to 6.0-second vehicle conditioning procedure adopted for the purposes of NCAP would also be suitable for assessing compliance with the requirements adopted in today's final rule. We believe that this procedure establishes an objective and practicable testing method that appropriately addresses the safety need (i.e., ensuring that the rearview image is available during the backing maneuver) while also affording manufacturers as much design flexibility as possible.

In this procedure, the vehicle condition will be established by opening the driver's side door,[110] closing the driver's side door,[111] activating the vehicle's starting system using the key, and selecting the vehicle's reverse direction. This procedure, starting with the opening of the vehicle door, and ending with selecting the vehicle's reverse direction,[112] will occur in no less than 4.0 seconds and no more than 6.0 seconds in order to reflect the naturalistic driving data mentioned above. While the requirements of today's final rule do not impose the burden on testing facilities to place the vehicle into reverse at exactly 4.0 seconds, today's rule allows for the agency to test for compliance with the 2.0 second rearview image response time requirement at any point between 4.0 and 6.0 seconds after the initiation of the test procedure.

However, the agency recognizes that current visibility systems response times vary considerably between manufacturers and even within each manufacturer. We further recognize that the aforementioned test procedure will not accommodate all the available rear visibility systems currently used by manufacturers. However, as noted by Honda in its comments, we believe that newer systems have been (and will be) developed to reduce initialization and response time. We further acknowledge the Alliance's concern that compelling the immediate compliance of all rear visibility systems with the response time requirements would significantly increase costs by forcing manufacturers to conduct expensive redesigns outside of the normal product cycle. Thus, as will be further discussed later in this document, we have adjusted the phase-in schedule in today's final rule to no longer require that manufacturers comply with the image response time requirement until the end of the 48-month statutory phase-in deadline.

In addition to the aforementioned test condition, we also agree with Magna, Volkswagen, and the Alliance that large discrepancies in ambient room temperature may create unnecessary variation in response time testing. We agree with Magna's recommendation and believe that a temperature condition range from 15 degrees Celsius to 25 degrees Celsius most closely approximates the temperature environment and capabilities of the available testing facilities. Thus, today's final rule adopts the temperature condition range of between 15 and 25 degrees Celsius (as measured from the interior of the vehicle) from the NCAP final decision notice to ensure test repeatability.

Separately, we decline to specify a manual transmission gear position as suggested by the Alliance in the technical workshop. As the test conditions in S14.2 now specify that the compliance technician shall place the vehicle direction selector into reverse, there is no need to specify a gear position for manual transmissions because the conditions in S14.2 assume that the transmission condition cannot be in reverse prior to the beginning of the test.

Finally, the agency has considered the Advocates' suggestion of requiring an interlock which would prohibit the vehicle from moving in reverse prior to the rearview image being active. The agency has particular concern with both the technical aspects of such a requirement as well its potential unintended consequences. As mentioned earlier in this document, the agency is particularly cautious that it does not wish to create additional, unintended safety risks. We acknowledge interlocks as a possible solution to the safety concern that drivers may begin backing maneuvers without the benefit of the rearview image. However, we are also cautious of

[109] For the same reason, we do not adopt the suggestion from the Global Automakers' comments to the NCAP request for comments suggesting that the vehicle conditioning procedure begin when the vehicle ignition is activated. While we recognize that manufacturers may design their rearview video systems to activate at the same time as the ignition, we do not believe it is necessary or appropriate to adjust the vehicle conditioning procedure for the image response time to begin at that point. Nothing in the vehicle conditioning procedure adopted in today's final rule precludes manufacturers from designing their systems to initialize when the vehicle's ignition is activated. However, to adjust the vehicle conditioning procedure to begin at a later time would aggravate our safety concern that the rearview image may not be available to drivers when they begin their backing maneuvers.

[110] As in the NCAP test procedure, today's final rule includes various details in the test procedure to clearly define the conditions of the test. However, instead of specifying a minimum width that the driver door should be opened, today's rule states that the driver door is open "to any width." We believe that this test condition is more appropriate in this context for a few reasons. First, it defines the possible conditions under which the vehicle may be tested. Second, it does not require a testing facility to test under an exact door opening width condition when the performance requirements are based on time measured from the point when the door opens. In other words, the exact width at which the door is opened is not determinative of the outcome of the test so long as the door is opened. Today's final rule also adopts the clarifying detail to define when the driver door is open. The test procedure states that "driver door is open when the edge of the driver's door opposite of the door's hinge is no longer flush with the exterior body panel" We believe that, given the importance of timing in this test procedure, it is important to establish as clearly as possible when the test procedure begins. However, this language is slightly different from the NCAP test procedure (which assumed the door opening would also be along the B-pillar) in order to accommodate any vehicles with driver doors that open using a different mechanism.

[111] We've adopted this procedure from the NCAP test procedure as well as we believe this more fully simulates the real world conditions under which the systems will operate (i.e., drivers will not generally begin backing maneuvers without first closing the door).

[112] We note that the NCAP final decision notice adopted a vehicle conditioning procedure that ended with the "selection of the reverse direction" of the vehicle as opposed to placing the vehicle in the reverse direction. We received comments in response to the NCAP request for comments seeking clarification about how the agency would determine whether the vehicle was in reverse. Some commenters suggested using the vehicle's backup lamps as a reasonable proxy for determining that the vehicle is in reverse. We responded in the NCAP final decision notice by stating our intention that the vehicle conditioning procedure begin with the selection of the reverse direction. We also stated that, while it is possible that the activation of the backup lamps is a reasonable proxy for determining when reverse has been selected, it is not the only valid method. We believe that these clarifications on when the vehicle conditioning procedure ends are also useful for the purposes of today's final rule. Thus, we have adopted this language in S14.2.

the possibility that such a requirement could lead to increased safety risks (such as when conducting three-point turns in traffic). Without additional research, the agency does not believe that it can thoroughly evaluate the economic costs, the safety benefits, and the potential safety risks of such a requirement at this time. Therefore, this final rule does not incorporate an interlock requirement.

i. Display Luminance

In order to ensure adequate visibility for the driver of the test objects in the display under a variety of conditions, the agency suggested in the ANPRM that a minimum brightness requirement may be necessary. In response to the ANPRM, the agency received one comment from Gentex suggesting that a 500 cd/m^2 would be appropriate. Based on this comment, the NPRM proposed to require that when tested in accordance with the proposed test procedure, the luminance of an interior visual display used to present the rearview image shall not be less than 500 cd/m^2. While the display units that had been reviewed by the agency seemed to have adequate display brightness, the agency reasoned that it is necessary to propose a minimum brightness level in order to ensure that drivers can see the rearview image under all lighting conditions.

Comments

The comments on the NPRM generally agreed that the 500 cd/m^2 requirement is inappropriate and cited a number of concerns. First, the manufacturers stated that the 500 cd/m^2 requirement is too bright for most driving situations. The Advocates supported the concerns of the manufacturers that the 500 cd/m^2 requirement is set too high. Second, the manufacturers stated that simply regulating display brightness is not a practicable standard because there are many different factors (such as contrast ratio, color chromaticity, uniformity, reflectance, etc.) which contribute to the quality of the video display. Finally, both manufacturers and suppliers such as Panasonic and Brigade stated that display luminance must be driver-adjustable in order to be practicable in all real-world driving conditions.

However, commenters suggested different approaches in setting a practicable standard. The Advocates suggested that the agency adopt SAE J1757 in place of the 500 cd/m^2 requirement. Toyota's comments supported the Advocates' suggestion of SAE J1757, but also recommended, in the alternative, that the agency consider ISO 15008. On the other hand, comments from the Alliance assert that the requirements of FMVSS No. 101 would adequately regulate display luminance. Further, Ford stated in its comments that FMVSS No. 101 currently does not regulate video displays and would require changes to the regulatory text to apply in this situation.

Finally, two commenters raised concerns regarding the proposed test procedure for display luminance. Global Automakers expressed concern that many of the parameters for the display luminance test have not been specified and requested that NHTSA specify parameters such as temperature, positioning of the measuring device, etc. Additionally, Panasonic requested in its comments that the testing procedure require an all-white screen test pattern.

Agency Response

The agency continues to believe that the ability of a driver to view a display with a high-quality rearview image is important. However, the agency has elected not to include minimum display performance requirements in today's final rule without conducting additional research. After reviewing the comments on the NPRM, the agency believes that specifying objective and practicable requirements in this area of performance has many complex challenges and the agency is not aware of any performance requirements that can objectively and practicably address our concern.

We note that while the commenters stated that the single value 500 cd/m^2 luminance requirement for a display performance will not be appropriate under the majority of ambient lighting conditions, the agency did not intend for rearview displays to achieve 500 cd/m^2 under all driving conditions. The NPRM proposed that rearview displays achieve 500 cd/m^2 under the conditions specified in the test procedures and did not seek to preclude manufacturers from providing drivers the means with which to adjust the display luminance. However, the agency agrees with the commenters that display luminance alone does not provide a complete evaluation of the screen's ability to provide the driver with a rear image suitable for detecting objects such as children behind the vehicle. For instance a display that provides a very bright image, but does not provide adequate contrast, will not provide an image where an object within the field of view is discernible. Similarly, two screens with identical luminance and contrast can manage glare in ways that are different enough to provide significantly different display performance in various ambient conditions. Additionally, the agency notes that adopting only a luminance requirement may be unnecessarily restrictive of technologies such as transflective LCD technologies which can combine traditional backlighting and reflective lighting in order provide improved image quality in all ambient lighting conditions.

In response to commenters' suggestion that that the agency instead consider adopting SAE J1757 or ISO 15008, NHTSA has reviewed these industry standards and has concluded that they are not suitable for incorporation in this rule. In regards to the Advocates suggestion that the agency adopt SAE J1757, the agency found that SAE J1757 provides detailed test processes for measuring various aspects that influence display performance. However, SAE J1757 does not provide threshold values for which the agency could use in setting minimum performance requirements. Thus, the agency does not believe SAE J1757 is appropriate for this rule. Similarly, the agency also considered ISO 15008. While ISO 15008 offers minimum standards in relation to basic factors such as character legibility and color recognition, we agree with as the Alliance's comments which noted that the ISO industry standard is not intended to apply to displays which utilize video images such as those that will likely be used by the manufacturers to fulfill the requirements of today's final rule. ISO 15008 specifically states that it is not applicable to more complex display technologies such as head up displays, maps/navigation systems, and rearview cameras. For these reasons, NHTSA believes that ISO 15008 is also inappropriate for incorporation into this rule.

Separately, NHTSA has considered both the Alliance and Ford's comments regarding utilizing the illumination requirements of FMVSS No. 101 to regulate display luminance. For the reasons mentioned above regarding the complexity of the factors that determine display performance, the agency no longer believes that adopting only a luminance requirement will adequately ensure display performance. Thus, we decline to adopt the changes suggested by the Alliance and Ford which would utilize the performance tests from FMVSS No. 101 to regulate display performance in today's final rule.

For the aforementioned reasons, the agency concludes today that we are not aware of any performance requirements that can objectively and practicably address our concern regarding the importance for the driver to have access

to a display which presents a high-quality rearview image. However, as the agency previously noted in the ANPRM, we are currently not aware of any display units installed by manufacturers which do not have adequate display performance under a majority of lighting conditions. Further, we recognize that the display performance aspect of the rear visibility system is readily apparent to a driver. Therefore, the agency expects vehicle manufacturers to continue to use capable displays in order to meet the expectations of their customers. Additionally, we note that our decision to not include minimum display performance requirements in today's final rule does not relieve the manufacturers from providing a reasonable level of display performance to ensure that their customers are able to successfully utilize this important safety feature.

Finally, given the agency's decision not to include a minimum display performance requirement, we note that the concerns cited by Global Automakers and Panasonic in regards to the display luminance test procedure are no longer applicable to today's final rule.

j. Durability Testing

In the ANRPM, the agency expressed concern regarding the reliability of rear visibility systems and how well such systems would perform under prolonged exposure to varying weather conditions. In response to the ANPRM, IIHS commented that current rear visibility systems have a wide range of quality in regards to weather resistance and recommended NHTSA pursue a minimum standard. On the other hand, Sony commented that cameras utilized in rear visibility systems are generally well protected against the elements. Considering these comments, the NRPM proposed to include vehicle level durability performance requirements which stated that the rear view system must still be able to display a compliant field of view after exposure to corrosion, humidity, and temperature tests. We reasoned that adopting existing requirements from our lighting standard (FMVSS No. 108) would be appropriate as exterior rear visibility system components are typically mounted similarly to vehicle lamps and are exposed to similar weather conditions.

Comments

In general, the comments from manufacturers state that the durability requirements proposed in the NPRM were impracticable as they were proposed as vehicle standards. The Alliance noted that the durability tests that were modeled after FMVSS No. 108 are frequently performed at the component level when certified to FMVSS No. 108. Global Automakers further stated that conducting these tests at the vehicle level creates impracticable challenges. For example, its members are unaware of any facility that will be able to perform the temperature variation test on an item as large as a whole vehicle.

On the other hand, comments from suppliers took varying positions. For example, Rosco agreed with the manufacturers that the standard should require a component test instead of a vehicle test because commercial vehicles have varying body styles and it would be impractical to test all the different vehicle configurations. Sony commented that its systems should not have any problem meeting the durability requirements as they were proposed in the NPRM. Using a different approach, Brigade recommended in its comments that the agency instead consider ISO standards and consider adopting the International Protection (dust/water resistance) rating of IP67 as a minimum standard for durability. More specifically, Bosch recommended that the agency consider the following standards: IEC 600068–2–1 Cold, IEC 60068–2–2 Dry Heat, IEC 60068–2–11 Salt Mist, IEC 60068–2–14 Temperature Cycling, IEC 60068–2–27 Shock, IEC 60068–2–30 Damp Heat, IEC 60068–2–38 Temperature and Humidity Cycling, IEC 60068–2–52 Salt Mist, ISO 16750–1 General Environment, ISO 16750–2 Electric Loads, ISO 16750 Mechanical Loads, ISO 16750 Climatic Loads, and ISO 16750 Chemical Loads.

Separately, Global Automakers requested clarification as to the test procedure and whether or not the durability tests would be performed in succession of each other.

Agency Response

Based on the comments received, the agency agrees that the vehicle based durability requirements of the NPRM are impracticable and therefore has adjusted these requirements to apply only to external components. We believe that the requirements, as proposed in the NPRM, would impose unnecessary certification costs without providing significant additional safety benefits to the public beyond those achievable through component level testing. We continue to be concerned that component failure as a result of temperature variations, water incursion, or corrosion may pose a safety risk to pedestrians and believe that the tests proposed in the NPRM are the appropriate tests to address this safety concern. However, we believe that testing durability at a component level will provide substantially similar protections to the public. Thus, in lieu of a vehicle standard, the agency adopts the durability standards proposed in the NPRM for external components.[113]

Component Level Testing

The agency agrees with the Alliance that the durability requirements in the NPRM contain considerable technical challenges for a vehicle testing facility and that component level testing would be more appropriate. A test facility capable of evaluating a vehicle for the proposed temperature exposure test would require a vehicle sized chamber to maintain a 176 °F temperature and within 5 minutes reduce the temperature to 32 °F. The agency recognizes that although such test facilities exist on a much smaller scale for component level equipment such as vehicle lighting, a vehicle sized chamber capable of removing the internal energy (heat) stored within the mass of a vehicle and the air within the chamber would require considerably greater power. Similarly, the agency agrees that precise control of both temperature and humidity required by

[113] In addition to adopting the proposed durability requirements from the NPRM on a component level, today's final rule also makes a technical adjustment to the proposed salt spray test procedure by using a newer version of the same ASTM salt spray testing procedure. The NPRM proposed to subject the vehicle to two 24-hour cycles of salt spray testing in accordance with ASTM Standard B117–73 (with one hour of rest in between each cycle). This procedure proposed in the NPRM was the 1973 version of the ASTM ''Standard Method of Salt Spray (Fog) Testing.'' While this ASTM standard does not establish threshold values for how long to expose a given test specimen to the salt spray testing, it does provide the methodology for conducting the test (e.g. specifications for the water used in the test, the test chamber, etc.). Since the agency has already incorporated by reference the 2003 version of this same standard (ASTM B117–03) in FMVSS No. 106, the agency decided to review both ASTM B117–73 and ASTM B117–03 to determine if it would be more appropriate to incorporate the newer standard in today's final rule. After conducting our review, we have concluded that there are no differences between the 2003 version and 1973 version of ASTM B117 that would lead to any significant changes in the results of the salt spray testing. While we discovered that in various instances (such as the water specifications and air supply specifications) the 2003 version of the test procedure is more specific (has a narrower tolerance range) than the 1973 version of the test, the agency does not believe this will significantly alter the test results or the burden of conducting the test. As in the NPRM, the test specimens would still be subjected to two 24-hour salt spray cycles with 1 hour of rest in between. Thus, as the agency believes that the 2003 version of the ASTM standard may be more readily available to the public and that the 2003 version does not contain any significant changes as compared to the 1973 version, the agency has decided to incorporate the 2003 version of ASTM B117 into today's final rule.

the proposed humidity exposure test for a vehicle is not practical for testing the rear visibility system. Finally, the agency notes that a vehicle based corrosion test would require considerable quantities of salt solution and application nozzles. While such a test facility may be practical for the corrosion test, the agency believes that a component level test is capable of achieving similar evaluations with much less cost. Thus, today's final rule adopts the durability tests proposed in the NPRM, but instead applies these tests on a component level.

We believe that individual components, which are exposed to the exterior of the vehicle, can be tested using an appropriate test fixture to simulate the critical areas of interest and potential failure. In order to accomplish this, the agency is specifying in the regulatory text that an environmental test fixture be used during compliance testing to simulate the body condition with respect to the external components' orientation and sealing. We believe that proper consideration of the orientation is an important factor in evaluating both a component's ability to dissipate heat as well as to manage water. Additionally we believe that a proper camera to body seal simulation is important in predicting the level of performance of the component's resistance to water intrusion when installed on the actual vehicle. We believe that considering such conditions, component level testing can achieve similar results as the vehicle tests presented in the NPRM.

Adoption of Temperature, Humidity, and Salt Tests From the NPRM

The agency believes that the tests proposed in the NPRM are a reasonable proxy for ensuring that rear visibility systems will not be prone to failure when subjected to prolonged exposure to a range of typical environmental conditions, representative of those experienced in real-world vehicle use. The agency continues to believe that, because the exterior components of rear visibility systems will be mounted on a vehicle in locations which are exposed to similar weather conditions as vehicle lamps, tests based on the requirements of FMVSS No. 108 are appropriate. These durability tests from FMVSS No. 108 appropriately ensure that manufacturers account for various unique design challenges that are present in automotive applications of the components that the agency anticipates will be used in rear visibility systems. The agency is concerned that without proper consideration and testing, a rear visibility system utilizing a camera may experience electronic component failure when exposed to thermal cycles. Likewise, the lens portion of the optical system of the camera may be prone to fogging or water intrusion as a result of exposure to humidity variations or road spray conditions and thereby not provide a visible rearview image.

The temperature and humidity tests both account for the ability of rear visibility system exterior components to manage condensation. The agency believes that is one of the most likely areas of failure for rear visibility systems because designing exterior components with both the ability to manage potential condensation inside the component, during humidity and temperature variations, while also managing external water intrusion is a particularly difficult engineering challenge. The failure to manage either of these two water sources may damage the rear visibility system. Further, it is important that exterior components on a rear visibility system be designed to resist salt corrosion. Unlike equipment designed for other applications, equipment designed for application on a motor vehicle are exposed to a significant amount of salt during normal use as many vehicles subject to the requirements in today's final rule will be used on roads that have been treated with salt for cold weather conditions.

To further ensure that the proposed tests in the NPRM are appropriate for application to rear visibility systems, the agency has evaluated several currently available rearview camera systems, on a component level, utilizing a procedure based on the durability tests proposed in the NPRM.[114] As the agency anticipated, the majority of rearview camera systems it evaluated performed well. However, because these results were not consistent over the entire set of rearview camera systems evaluated, the agency questions whether all rear visibility systems used to fulfill the requirements of today's final rule will perform well when subjected to the aforementioned tests.

We believe these types of system failures can create safety risks and are the likely modes of failure for rear visibility systems. Therefore, the agency believes that rear visibility systems should be designed to resist these typical ambient conditions. Thus, while the agency does not adopt the proposal in the NPRM to conduct these durability tests on a vehicle level, the agency believes that these tests continue to be important for ensuring the real-world reliability of these important safety systems and adopts these tests on a component level.

Consideration of Voluntary Industry Consensus Standards

As required under the National Technology Transfer and Advancement Act, the agency examined standards from various standards organizations in order to ascertain if any voluntary industry consensus standards were suitable for inclusion in today's final rule. Similarly to the comments from Bosch and Brigade, we concluded that various aspects of certain ISO standards and the IP rating system address similar concerns that are covered by the durability tests adopted in today's final rule. However, we have not included those standards in today's final rule for several reasons.

First, while we agree with Bosch that ISO 16750–1 General Environment, ISO 16750–2 Electric Loads, ISO 16750 Mechanical Loads, ISO 16750 Climatic Loads, or ISO 16750 Chemical Loads can be used to evaluate a rear visibility system's ability to resist environmental conditions, we decline to adopt them in their entirety because these standards cover performance requirements beyond those being considered by the agency. The aforementioned ISO standards are collections of various other voluntary industry standards which address many aspects of performance that are useful for a manufacturer designing a vehicle but not suitable for inclusion in a minimum safety standard. Beyond the safety concerns that we identified in the paragraphs above, the aforementioned ISO standards include aspects of performance such as vibration/shock load protection and chemical resistance. In addition to raising questions as to whether such additional requirements would be within the scope of notice of this rulemaking, these voluntary consensus standards cover aspects of performance where the agency does not anticipate frequent failure. For example, the vibration/shock load standard may be useful in evaluating the performance of other motor vehicle equipment, but does not seem to be as crucial for a rear visibility system where the agency anticipates manufacturers will use equipment with few (if any) vulnerable moving parts.[115] Further, the agency does not anticipate rear visibility system components to fail due to an inability to resist chemicals as rear visibility components generally have a smaller

[114] Mazzae, E. N., Andrella, A. (2011). Rear Visibility System Durability Testing Applied to Model Year 2010–2012 Light Vehicles. National Highway Traffic Safety Administration, Docket No. NHTSA–2010–0162–0226.

[115] For this same reason, we are not adopting IEC 60068–2–27 Shock.

exterior surface than other exterior vehicle equipment and therefore have limited exposure to chemicals such as gasoline and windshield washer fluids. Additionally, these components will likely be designed and mounted so as to dissipate liquids in order to meet our humidity and salt spray performance standards. Thus, while the agency encourages manufacturers to design rear visibility systems to be as reliable as possible, the agency does not adopt any of the aforementioned ISO standards as they cover additional aspects of performance that are not suitable for inclusion in a minimum safety standard.

Second, the agency considered the portions of the ISO standards which directly address temperature, humidity, and salt resistance. These portions of the ISO standards are IEC standards which have been designed to test the aforementioned aspects of performance. IEC 600068–2–1 Cold, IEC 60068–2–2 Dry Heat, and IEC 60068–2–14 Temperature Cycling address the ability of the rear visibility system exterior component to resist significant temperature variations. IEC 60068–2–30 Damp Heat and IEC 60068–2–38 Temperature and Humidity Cycling address the ability of those same components to manage water and dissipate condensation. Finally, IEC 60068–2–11 Salt Mist and IEC 60068–2–52 Salt Mist address the ability of those exterior components to resist corrosion due to prolonged exposure to salt. While many of these standards are suitable for manufacturer use in designing vehicles we conclude today that they are not suitable for incorporation into today's final rule.

In regards to the temperature variation standards, IEC 600068–2–1 Cold, IEC 60068–2–2 Dry Heat are not suitable for incorporation into today's rule because these standards merely establish a methodology for exposing a given component to hot and cold conditions but do not establish threshold values that the agency could use as a standard. Thus, the agency examined IEC 60068–2–14 Temperature Cycling which provides a test and the associated requirements to determine the ability of components to withstand rapid changes in ambient temperature. This standard is similar to the temperature test we have adopted in today's final rule except for one significant difference. Our proposed test requires that the sample be exposed to a high temperature and then transitioned to exposure at a low temperature within 5 minutes. IEC 60068–2–14 Temperature Cycling requires this transition of temperatures to take place within no more than 3 minutes. This rate of temperature change is significantly more severe than what we proposed, and more severe than we believe is necessary. During our tests of the exterior components of currently available rear visibility systems, we found that durability performance was not consistent among all the components tested.[116] As the rear visibility systems selected by the agency represent the type and quality of rear visibility systems we expect manufacturers to be using to meet the requirements of today's rule, the agency is concerned that this significant increase in stringency of the temperature cycle test could impose a significantly greater burden than is necessary. Accordingly, without additional information regarding the possible benefits to be gained by this increased stringency, the agency does not believe it is appropriate to adopt a standard which requires the temperature variation between hot and cold to occur within 3 minutes at this time. Therefore, we have not included the requirements of IEC 60068–14 in this final rule.

We also decline to adopt the two IEC standards which evaluate the resistance of a component to temperature cycling in a high humidity environment. We have not adopted IEC 60068–2–30 Damp Heat because it does not contain a temperature range at the freezing point of water. The agency believes that it is important for our humidity test to include a freezing temperature condition because many vehicles sold in the United States will be regularly exposed to these temperatures. It is important that manufacturers design rear visibility systems which properly manage condensation and its potential to freeze within the rear visibility system component. If such condensation is not properly managed, the agency is concerned that freezing condensation can create a part failure when rear visibility systems are exposed to such temperatures.

On the other hand, IEC 60068–2–38 Temperature and Humidity Cycling does include a testing temperature below freezing. However, it contains a temperature range which is significantly greater than those proposed in the NPRM. IEC 60068–2–38 Temperature and Humidity Cycling requires that components be exposed to a high temperature of 65 °C and a low temperature of −10 °C. As the purpose of the temperature cycle is to test the ability of an exterior component to manage water condensation which forms as the temperature decreases, we do not believe such a large temperature range is necessary. The test included in today's final rule includes temperatures which simulate a hot and humid climate and then reduces that temperature to freezing. We believe that this temperature range is sufficient to create the conditions of water condensation on the exterior components being tested and the freezing of that condensation. The agency is not aware of any need to include in the humidity test temperature conditions as varied as those from IEC 60068–2–38 Temperature and Humidity Cycling as the agency will still test the ability of these components to resist significant temperature variations through the temperature cycling test. Further, as mentioned above in our discussion of IEC 60068–2–14 Temperature Cycling, the agency does not wish to introduce requirements in today's final rule that may be more stringent or costly than those proposed in the NPRM without any information demonstrating an increased safety benefit to the public. Therefore, we have not included IEC 60068–2–38 in this final rule.

In today's final rule, we also have not adopted IEC 60068–2–11 and IEC 60068–2–52, which relate to salt mist. In our review of IEC 60068–2–11, we found that this test is designed primarily for the purpose of comparing the resistance to corrosion from salt mist of specimens of similar construction. Such a test seems to be for the purpose of ensuring that when a manufacturer is producing many copies of the same product, they all conform to the same quality standards. As this test is most useful as a quality/uniformity measurement, and not as a minimum performance standard, we have chosen not to use this test in this final rule.

However, the second salt mist test (IEC 60068–2–52) is similar to our proposed test in many ways. As with our proposal, this test exposes the test sample to a salt mist within a high humidity environment using atomizers at an elevated temperature. The primary difference is that the IEC standard cycle (specifically the severity levels (3) through (6) which are applicable to automotive applications) expose the test sample to a salt mist for 2 hours, and then expose the sample to a high humidity climate for 22 hours. Our proposed test cycle subjects the sample to a salt mist for 24 hours, with a 1 hour rest period. However, in spite of the different durations of application for the salt mist, we believe that the tests are similar because continued exposure to a high humidity environment is the most

[116] Mazzae, E. N., Andrella, A. (2011). Rear Visibility System Durability Testing Applied to Model Year 2010–2012 Light Vehicles, *supra.*

important condition that needs to be maintained during the test cycle. Maintaining conditions of high-humidity is crucial because after the application of the salt mist, increased humidity encourages corrosion. As this condition occurs in both tests, we do not anticipate that one test will be more or less stringent than the other.[117] In spite of this similarity, today's final rule adopts the salt mist test proposed in the NPRM because it is a standard that industry has experience using for the purposes of certifying compliance with FMVSS No. 108 and because it also utilizes a voluntary industry consensus standard (from ASTM [118]). Therefore, we have chosen not to use the IEC standard 60068–2–52 for the corrosion test of this final rule.

Separately, we note that Brigade suggested IP67 as an appropriate minimum standard. The IP rating is a system which rates a component's resistance to solid and liquid substance intrusion. The first number following the IP letters is the solid substance intrusion rating and the second number is the liquid substance rating. We decline to adopt IP67 as a minimum standard because we are concerned that IP67 may be too stringent. The number 6 in IP67 prohibits any level of solid substance intrusion (including dust intrusion). We note that a level 5 on the same IP rating scale would permit a small amount of dust intrusion. Dust is not one of the major failure modes that the agency has identified and the agency is concerned that establishing a solid substance intrusion standard of 6 may be overly stringent considering the fact that the agency is less concerned with dust intrusion than with the ability of the rear visibility system component to dissipate condensation. The agency is also concerned that the use of the standard of 7 for the liquid substance intrusion may be overly stringent. Establishing the liquid substance intrusion standard of 7 in IP67 would require that the component be immersed in water at a depth of up to 1 meter for a duration of 30 minutes. To test the exterior component in this fashion, would not take into account the mounting angle/orientation of the component (and possibly other design features) that can be used to dissipate water. Thus, to require an IP67 rating for rear visibility system exterior components may preclude certain water/moisture management strategies and may be unnecessarily design restrictive without offering any significant additional protection to the public.

Clarification of Order of Testing

In response to Global Automakers request for clarification as to the order of testing, we agree that the proposed test procedure in the NPRM did not describe the order in which the tests will be performed and when the rear visibility equipment will be evaluated for the field of view and image size requirements. Thus, we have amended the regulatory text to clarify that the field of view and image size performance requirements will be evaluated at the conclusion of each of the three durability tests.

k. Phase-In

The K.T. Safety Act requires that regulations established by this rule prescribe a phase-in schedule which requires full compliance with this rule no later than 48 months after the issuance of today's final rule. The K.T. Safety Act further instructs NHTSA to consider prioritizing different vehicle types in the phase-in schedule based on data on the frequency by which different vehicle types are involved in backing incidents. In comments on the ANPRM, Honda and AIAM expressed concern over the feasibility of a 48-month phase-in schedule. They noted that depending on the requirements of the final rule, a 48-month phase-in schedule could require manufacturers to conduct expensive ''off-cadence'' redesigns for their vehicles outside of the normal redesign schedule. Instead, these commenters suggested that a six year phase-in schedule would be reasonable.

The NPRM declined to allow a six year phase-in schedule as the K.T. Safety Act requires a phase-in schedule which mandates full compliance by 48 months. However, in order to address the commenters' concerns, the NPRM proposed a ''rear-loaded'' phase-in schedule with a first year phase-in requirement that is lower than the number of vehicles already anticipated to be equipped with rear visibility systems. Specifically, we proposed a phase-in schedule which would have no requirements for the first year after publication of the final rule, require 10 percent in the second year, 40 percent in the third year, and full compliance at the end of the 48-month statutory period. The NPRM proposed to apply this same phase-in schedule separately to passenger cars and MPVs.

To provide additional flexibility, the NPRM proposed to include limited carry-forward credits in order to enable manufacturers to count early compliance towards the phase-in targets. To accomplish this, the proposed regulatory text expanded the period during which manufacturers could count compliant vehicles for the second and third year targets of the phase-in period. For the second year phase-in target of 10 percent, the proposed text allowed manufacturers to count all vehicles produced between the publication of the final rule and the end of the second year. For the third year phase-in target of 40 percent, the proposed text allowed manufacturers to count all vehicles produced between the publication of the final rule and the end of the third year (as long as those vehicles had not been counted towards the second year's target). As the K.T. Safety Act requires full compliance with this regulation by the end of the 48-month period, the carry-forward credit system proposed in the NPRM did not allow for credits to be carried beyond the 48-month deadline.

Finally, we proposed to exclude limited line, small, and multistage manufacturers from the phase-in schedule and proposed to require that they be fully compliant by the end of the statutory phase-in period of 48-months. The agency reasoned that small, limited line, and multistage manufacturers face unique circumstances which necessitate additional flexibility. We noted that these manufacturers have longer product cycles and lack the sufficient number of product lines in order to efficiently apply redesigns to only a portion of their fleet as contemplated by a phase-in schedule. Thus we proposed, as we have in previous rules that provided a phase-in, to afford these manufacturers additional flexibility.

Comments

In response to the NPRM, the agency received comments from manufacturers generally expressing concern that the proposed phase-in schedule would require manufacturers to conduct expensive, ''off-cadence'' redesigns of their vehicles. The Alliance noted that while many manufacturers are currently installing rear visibility systems on their vehicles, the majority of these systems are unable to meet the entire set of performance requirements proposed in the NPRM. In order to increase flexibility and ensure that the regulation remains practicable, the Alliance

[117] The continued application of salt mist creates a high-humidity condition. Therefore, while one test applies the salt mist for 2 hours and the other for 24 hours, both tests maintain a high humidity condition for 24 hours of each test cycle.

[118] As noted above, today's final rule utilizes the 2003 version of the ASTM standard instead of the 1973 version because the agency has determined that there are no significant differences between these two versions of the standard and the agency believes that the 2003 version will be more readily accessible to the public.

comments (supported by many of the individual manufacturer comments) offered a number of suggestions.

First, the Alliance comments suggested delaying all requirements other than the field of view requirements until the end of the 48-month phase-in period. Noting the additional supply constraints from the March 2011 earthquake and tsunami in Japan, the Alliance stated that enabling individual manufacturers to incorporate the additional rearview image performance requirements during the 48-month phase-in period would allow time for proper system design and validation. Second, the Alliance recommended combining the passenger and light truck fleets in order to maximize flexibility for meeting the phase-in targets. General Motors asserted that the NPRM offered no support for a separate phase-in schedule between passenger and light truck fleets. Conversely, Porsche requested that the phase-in schedule be completely eliminated.

Finally, the Alliance also recommended that the agency adopt ''carry forward'' credits in order to expedite the implementation of rear visibility systems. In addition, varying suggestions from individual manufacturers express different positions on whether or not the carry forward credits should be allowed for use against the 48-month, 100% compliance deadline. For example, BMW specifically requested that carry forward credits be available for the final, 48-month, 100% compliance deadline. Volkswagen recommended a slightly different scenario requesting the agency allow carry forward credits for the 48-month, 100% compliance deadline but eliminate those credits a year after the 48-month compliance deadline.

Separately, the Alliance comments also requested that incomplete vehicles/multistage manufacturers be afforded an additional year beyond the normal phase in schedule. NTEA supported this concern by requesting that multistage manufacturers be given an additional year of phase-in time in order to have time to determine their compliance strategy after the OEMs have come into full compliance.

Agency Response

The phase-in schedule established by today's rule, excluding small volume and multi-stage manufacturers, is as follows:

- 0% of the vehicles manufactured before May 1, 2016;
- 10% of the vehicles manufactured on or after May 1, 2016, and before May 1, 2017;
- 40% of the vehicles manufactured on or after May 1, 2017, and before May 1, 2018; and
- 100% of the vehicles manufactured on or after May 1, 2018.

The phase-in schedule proposed in the NPRM was based on an assumption that most of the current systems met the requirements of the rule or could be easily modified to comply with the requirements of the rule. Based on comments received, the agency has learned that many of the currently available systems are unable to comply with all of the additional requirements beyond those involving the required field of view without significant design modifications. As the agency wishes to maximize today's final rule safety benefits while avoiding imposing a significant additional cost burden on manufacturers beyond those anticipated in the NPRM, today's final rule delays the compliance date for all the performance requirements other than field of view until the end of the 48-month phase-in deadline mandated by the K.T. Safety Act.[119]

In spite of this adjustment to the phase-in schedule, the agency does not expect a negative impact on the estimated safety benefits of today's final rule. While the image size, response time, deactivation, durability and linger time requirements are important in addressing various safety concerns, the delay of these requirements in the phase-in is not expected to significantly affect the estimated effectiveness because the research conducted by NHTSA utilized systems which were not designed to conform to all of the requirements of today's final rule. In addition, the agency believes that this adjustment to the phase-in schedule can lead to a net increase in safety benefits as it will enable manufacturers to focus, in the near term, their resources on installing rear visibility systems on more vehicles instead of utilizing those resources to conform existing rear visibility systems to all the requirements of this rule by the second year phase-in target.

However, the agency continues to believe that the requirements beyond those pertaining to the field of view in today's final rule are important to ensure the long-term quality of this important safety equipment. The agency notes that rear visibility systems have currently been designed to be equipped on vehicles as a cost-option or for more expensive vehicles. As rear visibility systems are required under today's final rule to be equipped to all vehicles with a GVWR less than 10,000 pounds, the agency is concerned with ensuring that these rear visibility systems will meet minimum performance standards even when installed on relatively low-cost vehicles in the future. The agency believes that, while relieving the manufacturers of the burden of complying with the requirements of today's rule beyond the field of view requirements during the phase-in period can lead to a net increase in safety benefits in the near term, all the requirements in today's final rule are important towards ensuring the long-term quality of rear visibility systems.

As mentioned above, the comments on the NPRM demonstrate that the costs of bringing existing rear visibility systems into compliance with all of the requirements of today's final rule (by the second year phase-in target) are significantly greater than the agency anticipated. In the NPRM we proposed a ''rear-loaded'' phase-in period which required a second year phase-in target of 10% and a third year target of 40% in order to afford the manufacturers a significant amount of flexibility. However, we acknowledge the comments from the manufacturers and agree that to require rear visibility systems which currently do not comply with all of the requirements in today's final rule to become compliant by the second year phase-in target would compel manufacturers to conduct significant redesigns outside of the normal product cycle. In the NPRM, we considered the proposed phase-in schedule to be appropriate as we assumed that most rear visibility systems currently available on the market would be able to meet the requirements proposed in the NPRM. In addition, the costs/benefits analysis in the NPRM was also based on this assumption as it did not consider the costs of redesigning rear visibility systems within the phase-in period. In order to avoid significantly increasing the costs of this rule, today's final rule does not require that manufacturers conduct costly product redesigns by the second year phase-in target. As

[119] We note that, during this phase-in period, manufacturers will still have an incentive to design systems that meet the image size and image response time criteria in NCAP. As mentioned above, in order to be listed as a ''Recommended Advanced Technology Feature'' in NCAP, rearview video systems will need to meet field of view, image size, and image response time criteria that are similar to the requirements adopted in today's final rule. While the agency does not believe that it is practical to compel manufacturers to redesign their systems to meet all these requirements during the phase-in period, NCAP will still offer consumers comparative information on rearview video systems. NCAP will help consumers identify rearview video systems that meet these additional criteria and are better able to assist drivers in avoiding backover crashes.

suggested by the Alliance, allowing additional flexibility for manufacturers to incorporate the additional design changes at any point before the 48 month deadline will allow time for proper system design and validation.

However, today's final rule adopts the phase-in schedule proposed in the NPRM in regards to the field of view requirements. We believe that the field of view requirements are the most appropriate requirements to phase-in according to the schedule adopted by today's final rule because they are crucial requirements that enable drivers to see and avoid striking pedestrians behind the vehicle. In addition, testing conducted by the agency indicates that the vast majority of rear visibility systems are currently able to meet the field of view requirements of today's final rule. Thus, by only requiring that the field of view requirements be phased-in according to the schedule in today's final rule, we believe that most, if not all, current systems can now be used to meet the phase-in requirements as anticipated in the NPRM.

Further, today's final rule no longer requires separate phase-in schedules for passenger cars and MPVs, trucks, low-speed vehicles, and buses. As we have noted on many occasions, while the crash data suggest that larger vehicles such as MPVs represent a larger portion of the fatalities, they do not represent a disproportionate amount of backover crashes in general. Thus, the agency agrees with the comments from General Motors that a separate phase-in schedule would not support the safety goals of this rulemaking. As noted in the regulatory impact analysis, manufacturers have installed a greater portion of their rear visibility systems on larger vehicles such as trucks and MPVs.[120] As the agency anticipates that manufacturers will continue this pattern with a combined fleet phase-in schedule, the agency has added the flexibility for manufacturers to combine their passenger car and light truck fleets for the purposes of phase-in compliance.

Considering this additional flexibility, the agency no longer believes the carry forward credit system is necessary as suggested by the Alliance, BMW, and Volkswagen for the following reasons. First, we note that the carry-forward credit systems proposed by BMW and Volkswagen cannot be implemented as they extend beyond the 48-month ''full compliance'' deadline required by the K.T. Safety Act. As we interpret the K.T. Safety Act, allowing carry-forward credits to be used towards the final, 100% compliance, year of the phase-in would not constitute ''full compliance'' within the meaning of the Act. Second, as the agency has adjusted the phase-in schedule to afford additional flexibility through minimizing the requirements that must be met at the beginning of the schedule, we no longer believe it is necessary to utilize a carry-forward credit system to further alleviate the burden of compliance. We also note that adopting a carry-forward credit system will instead increase the compliance burden on manufacturers by requiring manufacturers to file additional compliance documents with the agency while still being unable to afford the additional flexibility beyond the 48-month statutory deadline as requested by the commenters. Therefore, today's final rule has not included a carry-forward credit system with the phase-in schedule.

Today's final rule also adopts the exclusions proposed in the NPRM for limited line, small, and multistage manufacturers from the phase-in schedule and simply requires full compliance at the 48-month statutory deadline. The agency continues to reason that small, limited line, and multistage manufactures face unique circumstances, mentioned above, which support the need for additional flexibility. However, due to the restrictions in the K.T. Safety Act, we cannot accommodate the request of multistage manufacturers to be afforded a phase-in schedule which allows an extension beyond the 48-month deadline.

Finally, we note that the phase-in schedule has been adjusted so that the first year of the schedule begins on May 1, 2014 (with the first compliance year as between May 1, 2016 and April 30, 2017). The agency believes that adjustment in the phase-in schedule is appropriate in order to ensure that manufacturers would have the amount of time that Congress authorized the agency to allot for the phase-in period under the K.T. Safety Act.

l. Remaining Issues

Finally, the agency received other comments on the NPRM on the following additional issues. We have examined these comments and respond to them in turn in the paragraphs that follow.

Executive Order 13045

In addition to their comments mentioned above, KidsAndCars.org noted that Executive Order 13045 requires that federal agencies evaluate the environmental health or safety effects that an economically significant rule may have on children and explain why the approach selected is preferable to other potentially effective and reasonably feasible alternatives. KidsAndCars.org stated in its comments that this rulemaking is economically significant and that NHTSA is required, under Executive Order 13045, to provide the aforementioned analysis.

Agency Response

As explained below in section V, *Regulatory Analyses,* we agree that Executive Order 13045 is applicable to this rulemaking. Pursuant to the criteria set forth in Executive Orders 12866 and 13563, we agree with KidsAndCars.org that this rulemaking is economically significant and is subject to the requirements of Executive Order 13045. As we have noted below in section V, the health and safety effects of this rule on children are a central concern of this rulemaking. Thus, the environmental health and safety effects, and the potential alternatives to this rule are extensively discussed directly in this preamble and the accompanying regulatory impact analysis for today's final rule.

Driver Education and Driver Distraction

As noted in above is section II, *Background and Notice of Proposed Rulemaking,* many individual commenters stated that driver education would contribute significantly towards reducing backover crashes. In addition, KidsAndCars.org also commented that driver education will be crucial in ensuring that drivers are trained and able to effectively utilize the required rear visibility systems. In a related issue, individual commenters also expressed concern that drivers will be distracted by rearview images and focus on the displays instead of being aware of their surroundings.

Agency Response

While we noted in the NPRM that driver education may lead to greater effectiveness statistics for rear visibility systems, NHTSA currently has not yet established a new driver education campaign to complement this rulemaking. In the K.T. Safety Act, Congress was concerned with the expansion of the required field of view behind the vehicle in order to avoid backover crashes. Thus, this rulemaking focused on the possible rearview countermeasures and how they could be used to expand the rear field of view as contemplated by Congress. In general, the agency is aware of the benefit of driver education when it comes to all

[120] *See* Final Regulatory Impact Analysis, available in the docket number referenced at the beginning of this document.

crash avoidance technologies. We will continue to use *www.safercar.gov* to support these efforts and carefully consider if any additional action is warranted.

In addition, as described in our earlier discussion on linger time, deactivation, and backing event, NHTSA shares the individual commenters' concern that drivers may be distracted by the rearview images from being aware of their surroundings. Thus, we have aimed in today's final rule to ensure that the rearview image is presented to the driver only under appropriate circumstances by including restrictions on when the image shall be displayed in relation to the defined backing event. While the agency notes that the rearview image will divert some driver attention away from the rearview mirrors or windows during a backing maneuver, we believe that the increased field of view afforded to the driver through the rear visibility system will, on the whole, increase the driver's awareness of his or her surroundings.

Color/Real-time Rear Visibility Systems

While the NPRM did not propose specifications to require that rear visibility systems display the rearview image in color or in real time, two suppliers commented that such requirements would be appropriate. Sony commented that, as third party research indicates that humans possess a greater ability to recognize objects in a color environment, a color camera and display system should be required. In addition, Rosco was concerned that when a rearview video system is integrated with various other vehicle systems, there may be a time delay in which could affect the rear visibility system's effectiveness.

Agency Response

While the agency acknowledges the concerns from Sony and Rosco, the agency is unaware of any rearview video systems, currently offered on the market, which do not offer a rearview that is both in color and in real-time. We note that, as rearview displays are items of automotive equipment that drivers will frequently interact with, we believe it is reasonable to expect the decision making process of manufacturers to be significantly influenced by consumer expectations. Thus, we decline to establish requirements in today's final rule requiring that rear visibility systems use color displays as suggested by Sony. To do as Sony suggests would unnecessarily complicate today's rule and the cost of compliance as manufacturers would be required to certify not only that their vehicles have color displays—but color displays that meet a certain minimum standard. We also decline to set a ''real-time video'' performance standard as requested by Rosco for similar reasons. To require manufacturers meet to real-time video performance standards would increase the cost of compliance, while providing no demonstrated increase in safety benefit from the rear visibility systems that we expect manufacturers to be utilizing to meet the requirements of today's rule.

Multistage Vehicles

In its comments, NTEA requested that testing be conducted more on the component level in order to afford the multistage manufacturers maximum flexibility in utilizing different cameras to meet the standard. Further, NTEA requested confirmation that the rear visibility camera would not have to be mounted behind temporarily attached equipment such as a salt or sand spreader which is temporarily mounted to the trailer hitch of a pickup truck.

Agency Response

The agency appreciates the concerns of the multistage manufacturers. We recognize that many of the requirements of today's final rule are dependent on the presentation of the test objects behind the vehicle, through a rear visibility system, in relation to the vehicle and the driver. Since the goals of today's final rule include the driver's ability to view pedestrians within the backing path of his or her vehicle, it is necessary to establish performance requirements in relation to attributes such as the driver eye point and the vehicle rear bumper. Thus, the test procedure adopted by today's final rule inevitably must incorporate various tests on the vehicle level. However, we note that the test procedure in today's final rule prescribes the method by which the agency will conduct compliance testing. Thus, it does not preclude manufacturers (such as multistage vehicle manufacturers) from conducting testing in a different manner as long as the rear visibility system will meet all the requirements of today's rule when installed and tested, by the agency, according to the test procedure described in today's rule.

Finally, we also acknowledge NTEA's concerns that temporary equipment installed by the vehicle owner, such as salt or sand spreaders, may be restricted by today's final rule. However, we note that today's rule does not apply to trailers and other temporary equipment that can be installed by the vehicle owner.

Persons With Disabilities

The K.T. Safety Act directs the agency not only to issue a regulation to reduce death and injury resulting from backover crashes, but to particularly examine crashes involving small children and disabled persons. As described above, the agency examined the FARS and NASS–GES databases to determine whether or not persons with disabilities are frequently involved in backover crashes. While the agency identified various cases in the databases between the years 2007 and 2010 that involved persons with disabilities, the data do not indicate that such persons were frequently involved in backover crashes.

The FARS and NASS–GES data (from 2007–2010) show one case that involves a vision-impaired individual that resulted in a fatality and two cases involving persons in a wheelchair that resulted in injuries. As we noted above, the agency found other cases where the individual was specified as ''impaired'' (1 in FARS, and 11 in NASS–GES). For these cases, the agency is not able to identify whether the person was ''impaired'' due to a physical disability (temporary or otherwise) or due to some other cause. However, even considering all the aforementioned cases, the data suggests (on the whole) that persons with disabilities are infrequently involved in backover crashes.

While the data do not suggest persons with disabilities are frequently involved with backover cases, the agency believes that such persons will benefit from the requirements of today's final rule in a similar way to other pedestrians. While persons using wheelchairs would generally be lower in height when compared to a standing adult, such persons would unlikely be shorter than the 18-month-old toddler (upon which agency has based the 0.8-meter height of its test objects). As described in our discussion of our test objects and field of view requirements in today's final rule, using the 0.8 meter test object located beyond the width of the vehicle (at 5 feet to either side of the vehicle longitudinal centerline) enables the agency to ensure that the 18-month-old toddler will be covered by the required rear visibility system as he/she moves towards the vehicle's longitudinal centerline. The same is true for persons in wheelchairs. As it is highly unlikely that a person in a wheelchair would be shorter than the 0.8 meter test object, the agency believes that such persons would be visible in all the relevant areas behind the vehicle (through the required rear visibility system) that are associated with the highest crash risk.

Similarly, the agency believes that persons with other forms of disabilities will also be visible to a driver using a rear visibility system meeting the requirements of today's final rule. Persons using crutches or other similar mobility aides will also generally be taller than the 0.8-meter test object as these individuals are generally standing when using their mobility aid. Further, vision- or hearing-impaired persons will also be readily visible to the driver using a rear visibility system meeting the requirements of today's final rule as such a person would also be typically standing when located in the relevant areas behind the vehicle.

Further, the available data indicate that persons with disabilities would not move into the vehicle blind zone at a speed that is significantly greater or different than the test speed used by NHTSA in the 2012 research that used a moving obstacle presentation (2.3 mph).[121] In the agency's review of the available research, the agency found various studies that state that persons using wheelchairs generally travel at a speed between 0.96 and 2.42 mph.[122] As the agency does not anticipate that persons with other types of disabilities may move into the vehicle's blind zone at a speed greater than persons using wheelchairs, the agency believes that drivers will be able to use the rear visibility system required by today's final rule to avoid backover crashes with persons with disabilities. Thus, while the data do not indicate that persons with disabilities are frequently involved in backover crashes, the agency believes that the requirements in today's final rule will nonetheless enable drivers to detect and to avoid potential backover crashes that may involve a person with a disability.

Additional Research From IIHS and UMTRI

While the NCAP request for comments and final decision notices are a separate agency action that is independent from the actions taken in today's final rule, various commenters to the NCAP request for comments mentioned additional research that may contain information relevant to this rulemaking action. The first comment was from the Alliance regarding the potential contents of a forthcoming study by the University of Michigan Transportation Research Institute (UMTRI). The second comment was from IIHS on data that they obtained through their Highway Loss Data Institute (HLDI).

Forthcoming UMTRI Study

The Alliance and General Motors both commented to the NCAP request for comments that a forthcoming study from the University of Michigan Transportation Research Institute (UMTRI) examining the effectiveness of rear video systems is likely to be available soon. They asserted that, if the study shows that rearview video systems are already having a significant impact on reducing crashes, then it may not be necessary to include various performance requirements for these systems.

As we stated in the NCAP final decision notice, the agency is encouraged that organizations continue to devote resources to researching backover crashes. Unfortunately, this additional information from the referenced UMTRI study is currently unavailable for analysis. However, the agency believes that the information resulting from this study is unlikely to alter the agency's regulatory decisions in today's final rule. As the commenters suggest, the results of the study may indicate that rearview video systems are already having an effect on reducing backover crashes.

However, even if the results of the study are as the commenters anticipate, the agency believes that minimum performance requirements are still appropriate and necessary in order to ensure that the rear visibility systems installed on vehicles in compliance with FMVSS No. 111 are systems that can assist drivers in avoiding backover crashes. While the currently available systems being equipped on vehicles may already help drivers avoid backover crashes, the available data still indicate that the performance requirements adopted in today's final rule address various conditions under which a poor-performing system could lead to increased backover safety risk. As we noted above in our discussion of SCI cases with rearview video systems, it is important that future systems be designed to show the rearview image to the driver as early as possible so that the driver will be able to see any pedestrian behind the vehicle and avoid the crash.

Further, we believe that minimum performance requirements are necessary—even if current systems meet those requirements. Without performance requirements established in an FMVSS, NHTSA would not be able to ensure that future systems would continue to be effective in helping drivers avoid backover crashes.

IIHS Highway Loss Data Institute Information

Separately, IIHS commented in response to the NCAP request for comments that they support NHTSA's efforts to promote countermeasures that assist drivers in avoiding backover crashes. They also noted that the available data show that rearview video systems greatly increase visibility behind the vehicle and should create a measureable effect on reducing backing crashes. However, they stated that the preliminary data that they have gathered from their Highway Loss Data Institute (HLDI), to date, provide little evidence at this time that these systems are preventing crashes and reducing loss at a measurable rate.[123] We have reviewed the available information from HLDI that shows a lack of a statistical difference in one instance and a statistically significant increase in claims in another instance.[124] However, due to the preliminary nature and the directional inconsistencies in the data, we do not believe that this information should lead the agency to conclude differently on the effectiveness of the available technologies considered in this document.

In their HLDI study, IIHS compared insurance claim frequencies for various categories such as physical damage to the at-fault vehicle (collision coverage)

[121] *See* Docket No. NHTSA–2010–0162–0253, Rearview Video System Use by Drivers of a Sedan in an Unexpected Obstacle Scenario.

[122] *See generally* Tolerico, M.L., Ding, D., Cooper, R.A., Spaeth, D.M., Fitzgerald, S.G., Cooper, R., Kelleher, A., Boninger, M.L., (2007) Assessing mobility characteristics and activity levels of manual wheelchair users, J Rehabil Res Dev. 2007;44(4):561–71; Kaminski, B.A, (2004) Application of a Commercial Datalogger to Electric Powered and Manual Wheelchairs of Children, *available at http://etd.library.pitt.edu/ETD/available/etd-11292004-115314/unrestricted/Thesis2.pdf;* Sonenblum, S.E., Sprigle, S., Lopez, R.A., (2012) Manual Wheelchair Use: Bouts of Mobility in Everyday Life, *available at http://www.hindawi.com/journals/rerp/2012/753165/*; Cooper, R.A., Thorman, T., Cooper, R., Dvorznak, M.J., Fitzgerald, S.G., Ammer W., Guo, S.F., Ph.D., Boninger, M.L., (2002) Driving Characteristics of Electric-Powered Wheelchair Users: How Far, Fast, and Often Do People Drive?, *available at http://www.cs.cmu.edu/~cga/behavior/epw-datalogger.pdf;* Ikeda, H., Mihoshi A., Nomura T., Ishibashi T., (2003) Comparison of Electric and Manual Wheelchairs Using an Electrocardiogram, *available at http://www.union-services.com/aevs/449-452.pdf.*

[123] This apparent inconsistency between the cited substantial increase in rear visibility and the lack of reduction in real world insurance data claims may be associated with a few potential factors. First, there is a limited amount of insurance data due to these systems being relatively new. Second, these crashes are a relatively small proportion of the overall vehicle claims. Finally, the study considers data beyond backover crash data. This comparison may contain confounding factors that do not reduce the utility of this information for the purposes of IIHS, but it does not contain information specific enough for make conclusions about rearview video systems for the purposes of this analysis.

[124] Bulletin Vol. 28, No. 13: December 2011 and Bulletin Vol. 29, No. 7: April 2012

and physical damage to a struck vehicle or property (property damage liability coverage). This study focused on select Mazda and Mercedes-Benz vehicle models with and without rearview video systems. In general, they stated that, for these models, they did not observe statistically significant reductions in claim frequencies and in some cases found that cars with cameras had increased claims.[125] For example, in their analysis of crash data for Mercedes-Benz vehicles (a more robust data set than the analysis of the Mazda vehicles[126]) with and without rearview video systems, IIHS did not find a statistically significant difference in any of the claim frequencies (which may be partially attributable to the data's wide confidence interval). In addition, the authors of the study of Mercedes-Benz vehicles noted that the transmission status was unknown (i.e., whether the vehicle was in reverse or not). Thus, for those vehicles, all crash types were considered—including those for which rearview video systems cannot be reasonably expected to prevent.[127]

The agency understands that the types of crashes contemplated by Congress in the K.T. Safety Act (backover crashes) occur much less frequently than all property damage crashes. This makes it more difficult to find statistical significance using the Highway Loss Data Institute methodology. As IIHS stated in their comments, this data is still preliminary data. Further, this data is not designed to isolate the effect of rearview video systems on the specific type of crashes that we are addressing in this document—backover crashes. Thus, when considering these studies as well as the other available studies completed by NHTSA and other organizations, including all the limitations within the methodologies, the data continue to show that the installation of rear visibility systems meeting the requirements of today's final rule will decrease the risk of pedestrian backover crashes. However, with more data, the HLDI methodology may be valuable in the future for examining the overall effect of rearview video systems.

m. Effective Date

Section 30111(d) of title 49, United States Code, provides that a Federal motor vehicle safety standard may not become effective before the 180th day after the standard is prescribed or later than one year after it is prescribed except when a different effective date is, for good cause shown, in the public interest. Pursuant to the K.T. Safety Act (requiring that the agency establish a phase-in schedule with a full compliance date no later than 48 months after this final rule is issued), today's final rule requires compliance in accordance with a phase-in schedule. This schedule establishes May 1, 2016 as the first compliance date with full compliance being required by May 1, 2018. For the reasons mentioned in our discussion of the phase-in, above, the agency believes that there is good cause and it is in the public interest to use the aforementioned phase-in schedule. The agency believes that the phase-in schedule contained in today's final rule affords the manufacturers an appropriate amount of time to meet the phase-in production targets and achieve full compliance by May 1, 2018.

IV. Estimated Costs and Benefits

Based on the data from FARS, NASS–GES, and NiTS, NHTSA estimates that backing crashes result in 410 fatalities and 42,000 injuries annually. Of these backing crashes, backover crashes (which involve a vehicle striking a non-occupant of the vehicle) contribute to an estimated 267 fatalities and about 15,000 injuries[128] annually. However, backover crashes involving vehicles with a GVWR of under 10,000 pounds account for an estimated 210 fatalities and 15,000 injuries annually.

a. System Effectiveness

As we mentioned in the NPRM, three factors must be present for a rear visibility system to avoid a backover crash and thereby provide a safety or other benefit. We have designated these factors F_A, F_S, and F_{DR}. In the agency's estimates regarding the effectiveness of the countermeasure required by today's final rule, we combine all three of these factors in order to determine the impact that countermeasures meeting the requirements of today's final rule will have in preventing backover crashes.

Defining Factors F_A, F_S, and F_{DR}

The first factor is designated as factor F_A. This factor examines whether or not the crash is one that is ''avoidable'' through the use of the device. In this factor, the pedestrian must be within the target range (i.e., design range) for the sensor, or the viewable area of the camera or mirror. In other words, the details and geometric parameters of the specific crash scenario must be such that (assuming perfect system function and driver use) the crash would be avoidable. In summary, factor F_A separates the avoidable crash scenarios from the unavoidable crash scenarios.

The second factor is designated as factor F_S. This factor assesses whether or not the system will detect the presence of a pedestrian behind the vehicle and output the appropriate visual display or otherwise warn the driver. This factor assumes that the pedestrian is within the system's design range and that the driver will react appropriately to the warning. In other words, this factor asks whether or not the device will successfully detect the pedestrian that is located within the range that the device is designed to detect. Thus, this factor assumes that the crash is an avoidable crash in factor F_A and assumes that the driver will react in the appropriate manner to avoid the backover crash.

Finally, the third factor is designated as F_{DR}. This factor examines whether or not (given that the crash is avoidable in F_A, and that the system has detected the pedestrian in F_S) the driver will be able to successfully use the technology in order to avoid the backover crash. In this factor, the driver must both perceive the information presented by the rear visibility system and respond appropriately before impact with the pedestrian. Thus, this factor evaluates the ability of drivers to use the rear visibility system that has detected a pedestrian in an avoidable crash situation.

Estimating F_A, F_S, and F_{DR} and Total Rear Visibility System Effectiveness

As the rear visibility systems under today's final rule are required to display an image of the area behind the vehicle to the driver, such systems will convey information to the driver regarding obstacles behind the vehicle (that are within its design detection range) 100% of the time. Thus, for the purposes of estimating the effectiveness of the rear visibility systems required under today's final rule, F_S is 100% and the relevant factors for discussion, are F_A and F_{DR}.

[125] For Mazda vehicles ''the only significant effect on claim frequency was a paradoxical increase in collision claims. There was also a decrease in high-severity claims for bodily injury, suggesting a reduction in collisions with nonoccupants.'' For Mercedes vehicles there were no statistically significant changes in any of the five insurance coverage types.

[126] Mercedes vehicles had four times as many insured vehicle years in the database as Mazda vehicles.

[127] A more detailed discussion of these studies is available in the Final Regulatory Impact Analysis—available in the docket referenced at the beginning of this document.

[128] Due to rounding, injuries for light vehicles and all vehicles are estimated to be 15,000.

In order to determine F_A, the agency conducted a study that reviewed 50 SCI cases that were available at the time of the study. The purpose of this study was to analyze whether or not the specific crash occurred at a location that is within the zone that a given countermeasure was designed to detect.[129] In other words, the study sought to identify the crashes in the 50 SCI cases studied that would have been avoidable by the driver—assuming an ideal (or perfect) driver response. This factor takes into consideration the fact that, even when a rear visibility system warns the driver regarding a potential backover crash and the driver reacts appropriately to the warning, the physics and geometric parameters of the particular situation may not allow for the backover crash to be avoided. In order to determine whether or not each SCI case would have been avoidable using a rear visibility system, the study considered factors such as the movement of the pedestrian (e.g., direction, speed), whether or not the pedestrian would have been visible to the driver using the rear visibility system, the general trajectory and speed of the vehicle etc. The study found that between 76% and 90% of the cases reviewed would have been avoidable cases using rear visibility systems meeting the requirements in today's final rule.[130]

In order to determine F_{DR}, the agency performed research by presenting an unexpected test object (with an image of a child pedestrian affixed to the test object) to drivers that were executing backing maneuvers. These studies examined the likelihood that the driver will react to the information from the rear visibility system sufficiently so as to avoid the crash by controlling test conditions such that the test object would always be presented in a location and in a manner where the rear visibility system would detect the test object (and inform the driver of the presence of the object). The agency conducted four separate studies (designated in this discussion as Studies 1, 2, 3, 4a, and 4b) since 2008 to examine the ability of drivers to avoid backover crashes when utilizing rear visibility systems.[131] Through these studies, the agency observed drivers (with various demographic characteristics) utilizing different rear visibility systems and different vehicle types when subject to different test object presentation methods. By carefully selecting the test parameters to be changed from one iteration of the study to the next, the agency is able to use these data to arrive at a reasonable estimate of drivers' ability to utilize rear visibility systems required under today's rule while also ensuring that potential variations (such as driver and vehicle type) in real-world circumstances will not have an unanticipated impact on the agency's estimates. The general parameters and results of the four studies are presented in the table below:

TABLE 12—NHTSA RESEARCH ON DRIVER USE OF REAR VISIBILITY SYSTEMS

	Study 1 (2008) 2007 Honda Odyssey & Study 2 (2009) 2007 Honda Odyssey		Study 3 (2010) 2007 Honda Odyssey		Study 4a (2012) 2012 Nissan Altima		Study 4b (2012) 2012 Nissan Altima	
Obstacle:	Centered op-Up		Centered Pop-Up		Centered Pop-Up		Laterally Moving	
Test Setting:	Laboratory Garage/Parking Lot		Daycare Garage/Parking Lot		Laboratory Garage/Parking Lot		Laboratory Garage/Parking Lot	
	N	% Crashes	N	% Crashes	N	% Crashes	N	% Crashes
Baseline (No System)	12	100	36	100			56	91
RV, 7.8″, in-dash	12	58	36	61				
RV 4.25″, in-dash					36	67	51	69
RV, 3.5″ in-mirror	10	30	23	52				

This table shows the basic information for each of the four studies conducted by the agency. In this table, ''N'' represents the number of participants for each test condition and the percentage of those participants that crashed is shown. For the baseline condition, no rearview video system was installed on the vehicle, while the size and location of the display is shown in each of the other conditions.

By observing drivers under these various conditions, the agency believes that a reasonable estimate for F_{DR} can be obtained for the rear visibility systems required by today's final rule. In each of the agency's tests, participants performed backing maneuvers either with or without a rear visibility system. Regardless of the specific conditions used in the particular test (e.g., driver/vehicle type, obstacle presentation, etc.), drivers with rearview video systems were consistently able to avoid crashes with the test object at a rate that is statistically greater than drivers without any rear visibility system.

As described above, the original research referenced in the NPRM (Studies 1 and 2 conducted in 2008 and 2009, respectively) utilized a Honda Odyssey as the test vehicle and tested the ability of drivers to avoid a pop-up test object located in the vehicle's blind zone. This research included participants age 25 to 55 and a mixture of male and female drivers. The research revealed that, while drivers were universally unable to avoid crashes with the test object without a rear visibility system, the drivers were able to avoid a crash with the pop-up test object approximately 55% of the time with a rearview video system.[132] While the research referenced in the NPRM

[129] For further information, please reference the Final Regulatory Impact Analysis prepared in support of this final rule, available in the docket number referenced at the beginning of this document.

[130] The agency decided to use the SCI cases to perform this analysis due to the level of detail required in order to analyze whether or not the totality of the facts would suggest that a case could have been avoided with a rear visibility system. The agency is not aware of any other source of information that could provide the same level of detail about crashes that would enable the agency determine circumstances of the crash such as the general trajectory/speed of both the pedestrian and the backing vehicle. The agency believes it is reasonable to use the results of this study to estimate F_A in this instance.

[131] *See* Docket No. NHTSA–2010–0162–0253, Rearview Video System Use by Drivers of a Sedan in an Unexpected Obstacle Scenario.

[132] 75 FR 76228.

accurately and effectively isolated the incremental benefit of the rearview video system over a uniform set of conditions (e.g., vehicle model, obstacle presentation, and driver demographics), NHTSA considered other research in conjunction with the information referenced in the NPRM in order to enhance the robustness of our analysis for the purposes of today's final rule. Although this additional research refines the agency's estimates of the potential benefits of the rear visibility systems required under today's final rule, the additional research does not alter the agency's decision.

In considering the subsequent research, the agency aimed to investigate whether or not a different test setting, a different vehicle type, different driver demographics, and a different obstacle presentation method would lead to an unanticipated effect on the agency's previous estimates on drivers' ability to utilize rear visibility systems to avoid a backover crash. In other words, the agency examined the available data from the additional studies to determine if there was any evidence that the aforementioned factors could lead to a statistically different test result.

In order to examine whether or not drivers would utilize rear visibility systems differently in a setting where drivers may expect the presence of children, the agency examined data from an additional study that was conducted in a day care center parking lot (Study 3 conducted in 2010).[133] This study showed that, given the same vehicle, driver demographic, and obstacle presentation parameters, the new setting (the day care center) did not influence drivers to avoid or crash with the test object at a statistically different rate.

The agency also conducted additional studies in 2012 (Studies 4a and 4b) where the agency utilized an additional vehicle model (the Nissan Altima) and expanded driver demographics (including a more balanced distribution of male and female participants [134] and including participants under age 25 and over age 55). The 2012 research contained two parts in order to enable the agency to examine whether or not the test object presentation method would lead to statistically different driver performance results. As discussed above, the two studies did not indicate that the expanded driver and vehicle types or the different obstacle presentation method caused drivers to avoid a crash with the test object at a statistically different rate.[135]

As the additional research examined by the agency since the NPRM did not indicate that the additional test parameters created statistically different results, the agency decided to incorporate the new data as additional data points in calculating its estimate of F_{DR}. In other words, to perform an analysis of the driver's ability to avoid a backover crash using rear visibility systems required by today's final rule, the participants from Studies 3, 4a, and 4b were combined with NHTSA's previous studies (Studies 1 and 2) as additional test participants in order to expand the total number of participants examined. The agency believes this is a reasonable approach as the agency was not able to find a statistical difference between these test participants and increasing the number of participants considered in NHTSA's analysis will increase the overall robustness of NHTSA's estimates regarding the ability of drivers to avoid a backover crash when using the rear visibility systems required by today's final rule.[136] When considering the data from these studies, the agency estimates that F_{DR} is 37%. In other words, 37% of the time, drivers would be able to avoid a backover crash when utilizing a rear visibility system meeting the requirements of today's final rule when the crash is an avoidable crash (under F_A).[137]

On the basis of the agency's research into these three factors, the agency believes that the rear visibility systems required under today's final rule will have a predicted effectiveness of between 28 and 33 percent. Below is a table showing the aforementioned effectiveness factors and the estimated system effectiveness for each of the regulatory alternatives considered during the rulemaking process. As mentioned above, these effectiveness estimates differ from the NPRM because the agency has incorporated the new information obtained from the tests performed at the day care center parking lot and NHTSA's subsequent study that utilized a Nissan Altima along with the pop-up test object presentation.[138] While the NPRM was unable to include these updated numbers for the tests performed at the day care center (Study 3) in its analysis, the NPRM referenced this material and NHTSA included it in the NPRM docket.[139]

[133] *See* Docket No. NHTSA–2010–0162–0001, Drivers' Use of Rearview Video and Sensor-Based Backing Aid Systems in a Non-Laboratory Setting.

[134] While the agency sought to more evenly balance the gender distribution in its 2012 study, the information from NHTSA's previous studies indicate that male and female drivers did not crash with the pop-up test object behind the vehicle at statistically different rates. In Studies 1–3, male drivers crashed 77.8% of the tests whereas female drivers crashed 75.5% of the tests.

[135] *See* Section II, g. *Additional 2012 Research, supra.* As we noted previously, testing additional participants may have enabled the agency to observe statistically different results for some of these new test parameters (e.g., age). The raw results of the data in Study 4 (*See* Docket No. NHTSA–2010–0162–0253) show that drivers older than 55 and younger than 25 did crash with the unexpected test object more frequently than drivers between age 25 and 55. (We did not test different age groups in Studies 1–3 because we did not anticipate that there would be a difference across age groups). However, the data do not show that these differences were statistically significant. While testing additional participants may have revealed a statistically significant difference, the agency was unable to identify more participants (that are familiar with the vehicle model and the technology) for this study.

[136] While we acknowledge that the tests conducted in Study 4b used a different object presentation method, we believe that these results can be included and analyzed in conjunction with Studies 1, 2, 3, and 4a. As we described above in our discussion of the research, we designed the moving test object presentation method with test parameters that were as close to the pop-up test object presentation method as possible (e.g., exposure time of the object in the rearview image). We reasoned that this approach would enable both presentation methods to mimic the same types of crash scenarios that we believe are the most prevalent (i.e., scenarios where the driver reacts to the unexpected presence of a pedestrian behind the vehicle). As these methods were designed with similar parameters, were design to mimic the same crash scenarios, and did not yield a statistically significant difference, we believe it's appropriate to incorporate Study 4b in our analysis of F_{DR}. We note that some participants were able to avoid a collision with the moving test object in the baseline (no rearview video system) condition in Study 4b. We have taken this baseline condition into account when calculating the effectiveness of rearview video systems in the moving test object presentation method.

[137] All the available data continue to indicate that rear visibility systems meeting the requirements of today's final rule (e.g., rearview video systems) would be the best technology that can address the backover safety concern that Congress directed the agency to address. Separate from our aforementioned concern that Study 4b lacks a clear method for isolating the incremental effect of the rearview video system, the agency is also not aware of any method of incorporating the data from Study 4b (in analyzing F_{DR}) that would produce a total system effectiveness for rearview video systems that would be inferior to any of the other available countermeasure technologies. Thus, while the agency believes that it is not appropriate to incorporate the data from Study 4b into its analysis of F_{DR}, the agency notes that it is unaware of any method of incorporating the data from Study 4b that would provide a rational basis for the agency to alter its decisions in today's final rule.

[138] *See* Docket No. NHTSA–2010–0162–0001.

[139] *See* Docket No. NHTSA–2010–0162–0001.

[140] In NHTSA's sensor system tests, one vehicle model was able to detect our plastic test object placed in the test location 100% of the time. The other detected the same test object in the same location approximately 40% of the time. By combining the number of trials for both vehicle models and the number of positive alerts for both vehicle models the agency roughly estimates that sensor systems will detect objects within their designed detection zone 84% of the time. However, the agency believes that this figure may represent the sensor system's performance under idealized conditions. As the primary purpose of these studies were to determine the ability of the driver to react to the output information from either a sensor or

TABLE 13—ESTIMATED SYSTEM EFFECTIVENESS

[In percents]

System	Final effectiveness	F_A	F_S	F_{DR}
180° RV	33	90	100	37
130° RV	28	76	100	37
Ultrasonic	8	49	* * * 84	18
Radar	8	54	* * * 84	18
Rear-Mounted Convex Mirrors	0	33 *	100	0 **

* F_A for mirrors is taken from a separate source due to lack of inclusion in the SCI case review that generated F_A for cameras and sensors.

** F_{DR} for mirrors is taken from a small sample size of 20 tests. It is 0% because throughout testing, drivers did not take advantage of either cross-view or lookdown mirrors to avoid the obstacle in the test.

* * * F_S for sensors was obtained from the agency's tests regarding the driver's ability to utilize sensor systems to avoid a backover crash with a test object. Thus, this figure involves the sensors' ability to detect the test object under idealized conditions.[140]

b. Benefits

On the basis of its application of the predicted effectiveness of the rear visibility systems that can be utilized to satisfy the requirements of today's final rule to the annual target population of 210 fatalities and 15,000 injuries, the agency estimates that the requirements of today's final rule will save between 13 and 15 lives per year and prevent between 1,125 and 1,332 injuries per year.[141] These updated estimates are lower than the estimates in the NPRM for a few reasons. First, the updated estimates account for the increased market penetration of rearview video systems since the publication of the NPRM[142] and the projected market penetration as a result of voluntary adoption of rear visibility systems through the year 2018. Second, the estimates take into account new data that has revised the size of the target population. Finally, the estimates have been revised based on new information available regarding the effectiveness of the rear visibility systems required under today's final rule. While this new information refines the agency's ability to better assess the costs and benefits of the countermeasure required in today's rule, the available data continue to indicate that rear visibility systems meeting the requirements of today's final rule are the most effective countermeasure for addressing the backover crashes contemplated by Congress in the K.T. Safety Act.

As further discussed in the sections that follow, the agency is aware that rear visibility systems are being adopted in the market. This adoption by the industry of rear visibility systems is estimated and accounted for in our analysis of the costs and benefits of today's final rule. However, the safety benefits that would be realized from these rear visibility systems are not included as benefits in this section because they do not result from the vehicles that are not projected to have rear visibility systems by 2018.

For the purposes of our analysis, we have assumed that the benefit of installing a rear visibility system is the same for each vehicle. Therefore, the voluntary adoption of rear visibility systems due to market factors create a proportional decline in both costs and benefits attributable to today's rule. As the agency is not aware of any data to indicate whether the vehicles voluntarily installed with rear visibility systems have a higher or lower risk of being involved in a backover crash, we have used this assumption in our analysis.

TABLE 14—ESTIMATED ANNUAL QUANTIFIABLE BENEFITS

Benefits	
Fatalities Reduced	13 to 15.
Injuries Reduced	1,125 to 1,332.

Beyond avoiding injuries and fatalities, the agency expects that benefits will accrue over the life of the vehicle as a result of avoiding property damage. While damage to rear visibility systems are a potential source of additional repair cost as a result of rear-end collisions, the agency calculates that these costs will be offset by the benefits realized by vehicle owners as a result of avoiding property damage only backing collisions. Across the 3 and 7 percent discount level (over the lifetime of the vehicle), the agency expects the net impact of rear visibility systems on property damage only crashes is a net benefit which ranges between $10 and $13 per vehicle.[143]

In addition to these quantifiable benefits, the agency continues to believe that today's final rule will contribute significantly toward achieving many unquantifiable benefits. NHTSA believes that a simple quantitative analysis is not sufficient when evaluating the benefits of this rulemaking. We note that Executive Order 12866 (reaffirmed by Executive Order 13563) refers expressly to considerations of equity by directing that agencies, ''choosing among alternative regulatory approaches . . . should select those approaches that maximize net benefits (including . . . equity).'' Executive Order 13563 explicitly states not only that each agency shall ''use the best available techniques to quantify anticipated present and future benefits and costs as

rearview video system, the test object was not designed with properties such as motion and material in mind. As discussed in Section III, c. *Alternative Countermeasures, supra,* various technical limitations on the sensors ability to detect objects within its design detection range suggest that the ability of the sensor system to detect a child may not be similar to the sensor system's ability to detect a plastic test object.

[141] In order to compare the annual costs of equipping the fleet to the benefits that can be realized from the equipped fleet, these estimates reflect the number of lives that can be saved annually once the full fleet of vehicles operating have been equipped with the rear visibility systems required by today's final rule. We anticipate that the number of vehicles with this safety equipment will rise steadily and be in all vehicles operated on the public roads by 2054. It also does not count any benefits that would be attributable to systems that the manufacturers are already installing on their vehicles prior to the first full year of mandatory full compliance (2018).

[142] While Model Year (MY) 2014 sales are not yet complete, the agency has information on the models that will offer rearview video systems as standard or optional equipment. When comparing this information to the sales projections and historic sales trends for each model, we are able to determine that approximately 57% of MY2014 vehicles will have rearview video systems. Further, if the sales trend after MY2014 continues to follow the historic sales trend, we anticipate that 73% of MY2018 vehicles will have rearview video systems. We discuss this issue further in the sections that follow and additional details about our projections are in the Final Regulatory Impact Analysis available in the docket referenced at the beginning of this document.

[143] *See* Final Regulatory Impact Analysis, available in the docket number referenced at the beginning of this document.

accurately as possible,'' but also that each agency ''may consider (and discuss qualitatively) values that are difficult or impossible to quantify, including equity, human dignity, fairness, and distributive impacts.''

These values—especially equity, fairness, and distributive impacts—are directly relevant to this final rule. There are strong reasons, grounded in unquantifiable considerations, to take action to prevent the deaths and injuries at issue here, including:

(1) We believe it is important to reduce the risk that drivers will be the direct cause of the death or injury of a person, particularly a small child at one's own place of residence or that of a relative or close friend. In many cases, parents are responsible for the deaths of their own children. We continue to believe that avoiding that horrible outcome is a significant benefit which is not fully or adequately captured in the traditional measure of the value of a statistical life. Of course, any death of a young child is a tragedy, but we believe that this traditional measure also does not adequately account for the value of reducing the risk that parents will be responsible for the death of or serious injury to their own children.

(2) We noted that 37 percent of the deaths and 7 percent of the injuries at issue here involve young children (under the age of five), and there is an important social interest in avoiding such deaths and injuries. While the agency has used the Department's standard monetary figure for the value of a statistical life, we acknowledge that various studies have placed the value of a statistical life at a higher value and the value of a statistical life of a child even higher. However, we note that the literature is in a state of development.

(3) The victims of the relevant crashes here include not only children but also people with disabilities and the elderly. Especially in the context at issue, such people lack relevant control over the situation and are not in a good position to protect themselves. There are strong considerations, rooted in fairness and equity, to reduce these risks that they face.

(4) The focus of the benefits analysis is on the prevention of deaths and injuries, and the avoidance of property damage, but the requirements of the rule will also provide a range of additional benefits. Drivers will benefit in numerous ways from increases in rear visibility. For example, parking will be simplified, especially in congestion. The evolution of the automobile market attests to these benefits. The agency believes that apart from the monetized values, increase in ease and convenience will provide significant, but not yet quantifiable, benefits to drivers.

c. Costs

The agency estimates that to equip each vehicle with a rear visibility system compliant with the requirements of today's final rule will cost between $132 and $142 per vehicle. For vehicles already equipped with a suitable display, the incremental cost of equipping the vehicle with a compliant rear visibility system is estimated to be $43 to $45. Given these per unit costs (and the current state of the market), the agency estimates that the cost to equip the entire fleet of new passenger vehicles sold annually (estimated at 16.0 million vehicles) with rear visibility systems meeting the requirements of today's final rule is between $546 and $620 million.[144]

These cost estimates differ from those in the NPRM, where the agency estimated that rearview video systems would cost between $159 and $203 for each vehicle not already equipped with a suitable display unit, $58 for each vehicle that was already equipped with a suitable display unit, and a total fleet cost of $1.9 billion to $2.7 billion annually.[145] In response to these estimates, the agency received comments from both equipment manufacturers and advocacy groups stating that the agency had overestimated the potential costs of these systems.[146] Specifically, both the Advocates and the American Academy of Pediatrics commented that the agency did not sufficiently estimate the potential reduction of costs for rearview video systems over time as manufacturers of such products gain experience in producing these systems. In addition, Sony and Magna commented that they expect that manufacturers will realize significant cost reductions through increased production levels and refinements in the manufacturing process. Further, Sony commented that voluntary adoption of this technology will conservatively double by 2013—even absent a final rule.

Thus, in response to these comments, the agency reexamined the cost estimates of the NPRM in order to obtain more accurate estimates regarding the annual costs of today's final rule. As the first year requiring full compliance with today's final rule is 2018, the agency has used the following information in order to more accurately predict the costs of today's rule in 2018.

First, the agency conducted a teardown analyses of representative rearview video systems which afforded updated cost estimates for individual rearview video systems that would meet the requirements of today's rule.[147]

Second, the agency also took a closer look at the rate of voluntary adoption of rear visibility systems through 2018. While the agency agrees with Sony that (even absent today's rule) rear visibility systems will experience increased market penetration, we did not rely on Sony's assertion that rearview video systems will increase two-fold by 2013. Instead, the agency took a different approach of basing its projections of the voluntary adoption of rearview video systems in 2018 on a combination of the data on the historical adoption trend for these systems and the agency's information on the vehicle models that will have rearview video systems in Model Year (MY) 2014. While MY2014 sales are not yet complete, we have information on the models that will offer these systems (either as standard or optional equipment). When we combine this information with the sales projections for each model, we are able to determine that approximately 57% of MY2014 vehicles will have rearview video systems. Further, if the sales trend after MY2014 continues to follow the historic sales trend, we anticipate that 73% of MY2018 vehicles will have rearview video systems.[148] We discuss this issue further in the sections that follow.

Finally, the agency also agrees with the commenters that manufacturers will realize cost reductions through increased familiarity with the manufacturing process and through economies of scale. However, because the agency did not receive any detailed information from the commenters regarding the extent of these particular possible cost savings, the agency has applied a general learning factor (based

[144] These costs do not include costs attributable to systems that will already be installed by vehicle manufacturers prior to 2018.

[145] 75 FR 76236. This estimate assumed a market adoption rate of 19.8% (across the fleet) prior to a final rule. $1.9 to $2.7 billion is the range of costs for rearview video systems only (does not include the cost range for sensor systems).

[146] Conversely, we note that the agency did not receive any substantial comment stating that the agency had overestimated the per unit price. We did receive comments from vehicle manufacturers that our phase-in schedule would create additional design/development costs for the industry and we believe we have accommodated these concerns through adjusting the phase-in requirements in today's final rule. However, those comments did not address the long-term per-unit costs that we use to calculate the costs of today's rule.

[147] *See* Final Regulatory Impact Analysis, available in the docket number referenced at the beginning of this document.

[148] *See id.*

on historic data on the adoption of automotive safety technologies [149]) to the information received from the teardown study. Using a constant learning factor (a 7% cost savings) over each cumulative doubling of production, the agency obtained what it believes is a more accurate estimate of the potential cost of rearview video systems in 2018.[150] Using this learning analysis method, the agency predicts that the per-unit costs in 2018 will be between $132 and $142 per vehicle (and $43-$45 per vehicle for vehicles that already have a suitable screen).

Using the aforementioned information (the new teardown study, the new adoption rate, and the new per-unit cost after learning), the agency estimates that the cost to equip the entire fleet of new passenger vehicles sold annually with rear visibility systems meeting the requirements of today's final rule is between $546 and $620 million.

TABLE 15—ESTIMATED INSTALLATION COSTS

Costs (2010 $)	
Full system installation per vehicle.	$132 to $142.
Camera-only installation per vehicle.	$43 to $45.
Total Fleet	$546 M to $620 M.

While the agency agrees with the commenters and conducted the aforementioned analyses to refine its estimates of the actual costs of today's final rule, the agency notes that these updated cost estimates do not affect any of the agency decisions regarding the requirements in today's final rule. The agency continues to believe that the requirements we've adopted in today's final rule are the only effective way of fulfilling the requirements of the K.T. Safety Act.

Separately, in estimating the above costs, the agency did not include ultrasonic or other rear sensor systems as part of the analyses because the systems examined by NHTSA are not able to meet the requirements of today's final rule. However, the agency did conduct a teardown analyses for ultrasonic sensor systems and found these systems to be much more expensive than the agency had previously estimated. In the NPRM, the estimated costs of various rear object sensor systems ranged between $52 and $92 to equip each vehicle. After conducting the teardown analyses and applying the learning factor, the agency now estimates that to equip each vehicle with ultrasonic systems would cost between $79 and $138.

d. Market Adoption Rate

In order to estimate the likely benefits and costs of this regulation, NHTSA has considered different methods for establishing a baseline market adoption rate of rear visibility systems against which to measure the effects of the regulation. Applying OMB Circular A–4, a baseline(s) would reflect ''what the world would look like'' in the absence of regulation.

Towards this end, the above sections measure the impact of equipping the vehicles that are not projected to have rear visibility systems by 2018. Thus, we have projected (based on the available data) what the market adoption of rear visibility systems would be by 2018 (the 100% compliance date in the phase-in schedule established by today's final rule). By comparing this projection to 100% compliance in 2018, our analysis shows the costs and benefits that are attributable to those remaining vehicles. The data indicate that many vehicle models are already being sold with rear visibility systems as standard or optional equipment. As described above, NHTSA projects that 73% of new light-duty vehicles will be sold with rear visibility systems by 2018.

However, calculating the costs and benefits based only on these vehicles that would not have rear visibility systems by 2018 does not account for other potential events that could affect market adoption. It is possible that some of the projected 73% market adoption in 2018 is attributable to events that are beyond ''pure market forces'' (e.g., the K.T. Safety Act and the rulemaking process). However, it is difficult to know with any certainty how many of these vehicles would be so equipped in the absence of this regulation, the rulemaking process, and the K.T. Safety Act. In other words, how much of the increase in the popularity of these systems is driven purely by market forces and how much is the result of manufacturers acting in anticipation of the regulation taking effect?

For several reasons NHTSA believes market forces are responsible for the majority of the recent increase in the number of rearview video systems projected to be installed by MY 2018. Typically, the market forces that lead to a surge in popularity of a technology are a decline in their cost and/or an increase in consumer demand. There is strong evidence that both of these factors are affecting the adoption of cameras in light-duty vehicles. For example, the increasing popularity of other features that require screens (such as navigation and infotainment systems) has significantly reduced the incremental cost of adding a video system since the screen is already there. It is also likely that consumers are beginning to better appreciate the value of such systems for safety reasons as well as their value to assist parking.

At the same time, NHTSA cannot rule out the possibility that some of the recent increase in projected future installations is due to manufacturers' anticipation of the regulation and would not be in the fleet were it not for the statutory requirement that NHTSA issue a regulation. If manufacturers believe that a regulation is imminent and they are in the process of redesigning models, they may add rear video systems now because it is usually less costly to integrate new features at the vehicle-redesign stage than at other times.

However, there is reason to believe that this factor has been less important than market forces. For example, some manufacturers have begun offering rear video systems in models before the normal re-design cycle. Such sales growth is more likely reflective of market forces rather than regulation. In addition, at least one major car manufacturer, Honda, had already in 2013 made rear-visibility cameras a standard feature in 94% of its vehicles. The fact that automakers have greatly increased the output of cars with rearview video systems suggests the demand for those devices is largely consumer driven and perhaps bound up with consumers' desire for the convenience of such cameras as well as their safety benefits. Additional evidence that adoption is market driven is that sales of aftermarket rear visibility kits that customers themselves install, despite being under no possible regulatory mandate to do so, are projected by industry sources to grow very rapidly.[151] The advertising of rearview video systems as a safety feature by several manufacturers has

[149] The agency examined the historical data for the following automotive safety technologies: driver air bags, antilock braking systems, manual lap/shoulder belts, adjustable head restraints, dual master brake cylinders. *See* ''Preliminary Regulatory Impact Analysis, Corporate Average Fuel Economy for MY2017–MY2025 Passenger Cars and Light Trucks'', November 2011, Docket No. 2010–0131–0167, (discussing our analysis of the learning curve discussion on pages 577–591).

[150] For additional information regarding the method that the agency used to calculate the cost savings over time due to learning, please reference the Final Regulatory Impact Analysis, available in the docket number referenced at the beginning of this document.

[151] CE Outlook, ''Backup Camera Sales to Near Double,'' 2/21/2012.

likely fueled further consumer demand for these devices.

In addition, we believe that now that rear visibility cameras have become a common safety device on many models, manufacturers may have some concern that they face potential tort liability if they market models that do not offer this safety feature. Finally, we note that once a manufacturer has designed a vehicle model to include a rearview video system, regardless of the motivation for that action, a variety of considerations, including consumer expectations and product liability, will preclude the possibility of the manufacturer's ceasing to offer cameras in future model years vehicles. In other words, those are costs that the industry have already incorporated into their production plans and thus are not affected by this rulemaking action.

Given the above, NHTSA finds substantial evidence that market forces are driving the increase in the rate of adoption of rearview video systems, but is unable to determine with any reasonable certainty the precise extent to which the prospect of regulation might also be a factor. Thus, in order to reflect this uncertainty about how to attribute the existing market adoption rate, we have conducted an additional analysis that presents a range of both the benefits and costs of this rule. In developing this analysis we are attempting to estimate the range of adoption of rear visibility systems which might have occurred by 2018 if Congress had not passed the K.T. Safety Act, NHTSA did not initiate a rulemaking on this subject, and no final rule were adopted.

At the top-end of this range, we adopt the assumption that *all* current and projected installations are due purely to market forces and that none are due to the rule. We recognize that this is a strong assumption, but we think that in light of the evidence discussed above it is a reasonable one on which to base an upper bound of the range of projected adoption levels. As noted above, our latest projection shows that 73% of the new vehicle fleet will be equipped with rearview video systems by 2018. We based this calculation on data on the historical adoption trend of these systems and the agency's information on which vehicle models will have these systems in MY2014. Using both historical sales data and the information the agency has about the vehicle models that will have rearview video systems as standard or optional equipment in 2014, NHTSA is able to estimate that approximately 57% of MY2014 vehicles will have rearview video systems. Then, if the sales trend after MY2014 continues to follow the historic sales trend established up to and including 2012 and we assume that this is all attributable to market forces (and none to the rule), we obtain a 73% baseline MY2018 rate of adoption rearview video systems.[152]

At the low-end of the range, we adopt the assumption that *half* of the increase in the market adoption trend as a result of the data from MY2014 is attributable to ''pure market forces'' and half is not. In other words, we make the following two assumptions for this low end estimate: (1) That the MY2008 to MY2012 historic adoption trend represents ''pure market forces'' and that this trend would have continued apart from the K.T. Safety Act and NHTSA's rulemaking process in response to the Act; and (2) that half of the difference between that continuation of the MY2008 to MY2012 trend (through to 2018) and our top end of the range estimate (that produces a 73% market adoption rate in 2018) represents a shift in ''pure market forces.'' We believe these assumptions are appropriate as a low end of the range estimate because we believe it is unlikely that *none* of the projected increase in installation for MY2014 (and beyond) are due to market forces (i.e., that all is due to anticipation of the rule). However, in the case of this rulemaking, the available information does not enable the agency to make any reliable determinations as to what portion of the market adoption (between our top and low end estimates) is due to ''pure market forces'' as opposed to other factors. As discussed above, we think the evidence supports ascribing a substantial majority of the increased adoption rate to market forces. Thus, we believe that the top and low-end estimates described above both represent somewhat strong assumptions and sufficiently capture the uncertainty surrounding what portion of the market adoption is attributable to ''pure market forces.''

Thus, in addition to reporting our data on the market adoption in MY2014 and our projections for 2018, this analysis considers what the costs and benefits (the effect) of the rule, the rulemaking process, and the K.T. Safety Act are. Using the top and low end estimated adoption trends described above, we believe that the market adoption in 2018 would be between 59% and 73%. Assuming this range of market adoption, we believe that $546 million to $924 million in costs and $265 million to $595 million in monetized benefits are attributable to today's final rule, the rulemaking process, and the K.T. Safety Act.[153]

e. Net Impact

Table 16 below presents the lifetime monetized benefits, lifetime costs, and presents their difference—the net impact. The table monetizes the aforementioned installation costs and fatality/injury reduction benefits and combines these values with maintenance costs and property damage only crash avoidance benefits. The costs in Table 16 do not vary by discount rate because this part of Table 16 only includes the costs that are incurred in order to produce the rear visibility system and install it on the vehicle (the installation costs). All these costs are incurred on the year the vehicle is produced. Thus, the costs vary by 180° or 130° camera and display type but do not vary by discount rate.

However, the benefits do vary by both discount rate and camera selection. Depending on the type of equipment used by the manufacturer (180° or 130° camera) and the discount rate (3% or 7%) the agency expects today's final rule to save between 20 and 30 equivalent lives per year.[154] Using the most up-to-date value of a statistical life from the Department's guidance[155], the agency expects the annual benefit of the rule (due to fatality and injury reduction) to be between $206 million and $317 million. We anticipate that the benefits from societal costs avoided due to fatality and injury reduction[156] will be $16 million to $24 million. Further, the net benefits[157] from property

[152] Further details on the agency's estimates are available in the Final Regulatory Impact Analysis. This document can be found in the docket cited at the beginning of this document.

[153] Further information on these calculations is available in the Final Regulatory Impact Analysis. This analysis is available in the docket referenced at the beginning of this document.

[154] These benefits do not include those lives that would be saved by rearview video systems voluntarily installed by the industry.

[155] *See* Guidance on Treatment of the Economic Value of a Statistical Life in U.S. Department of Transportation Analyses, *available at http://www.dot.gov/sites/dot.dev/files/docs/VSL%20Guidance%202013.pdf.*

[156] These are costs that would be incurred as a result of a fatality or injury that is apart from the value of the life lost or the quality of life lost (e.g., medical costs.

[157] While rearview video systems enable a driver to avoid property damage only crashes in addition to crashes resulting in injuries and fatalities, the property damage only cases also include cases where the crash was either not avoided or unavoidable (such as a rear-end collision) which would result in the additional expense of repairing the rearview video system. When considering these cases, the benefit of avoiding property damage outweighed costs of repairing rearview video systems when such crashes were not avoided. Thus, this value is expressed as a net benefit and is included in the benefits section of Table 16.

damage avoided range from $44 million to $57 million. Thus, the agency expects the total benefits from today's rule to range from $265 million to $396 million when considering injuries avoided, fatalities avoided, and property damage across the 3 and 7 percent discount rates.[158] Note that for the 180° camera options (the Low and High Estimates), the lifetime monetized benefits are the same, but the cost of display placement differs based on display type.

In this case, the monetized costs outweigh the monetized benefits and therefore the net impacts are cost figures. However, as mentioned above, there are significant benefits to this rule that cannot be quantified in monetary terms. The Primary Estimate is the lowest installation cost option (which assumes manufacturers will use a 130° camera and will utilize any existing display units already offered in their vehicles). The Low Estimate and High Estimate provide the estimated *minimum and maximum net impacts* possible. The Low Estimate is the 180° camera and assumes that manufacturers will install a new display to meet the requirements of today's rule. It represents the minimum overall benefit estimate as it has the largest negative net impact. Conversely, the High Estimate is the 180° camera and assumes that manufacturers that currently offer vehicles with display units are able and choose to use those existing display units to meet the requirements of today's rule. This represents the maximum overall benefit estimate because it has the smallest negative net impact.

TABLE 16—SUMMARY OF BENEFITS AND COSTS PASSENGER CARS AND LIGHT TRUCKS (MILLIONS 2010$) MY2018 AND THEREAFTER

Benefits	Primary estimate	Low estimate	High estimate	Discount rate (percent)
Lifetime Monetized	$265	$305	$305	7
Lifetime Monetized	344	396	396	3
Costs:				
Lifetime Monetized	546	620	557	7
Lifetime Monetized	546	620	557	3
Net Impact:				
Lifetime Monetized	−281	−315	−252	7
Lifetime Monetized	−202	−224	−161	3

f. Cost Effectiveness and Regulatory Alternatives

Based on the aforementioned revised figures for costs and quantifiable benefits, and on the relevant discount rates of 3 and 7 percent, the net cost per equivalent life saved for rearview video systems ranges from $15.9 to $26.3 million. However, as discussed above, the agency believes that today's rule also affords significant unquantifiable benefits in the form of reducing a safety risk that disproportionately affects particularly vulnerable population groups (such as young children), and exacts a significant emotional cost on relatives and caretakers who backover their own children. In addition, the rear visibility systems required under today's rule are the only effective means of addressing the backover crash safety concern and fulfilling the requirements of the K.T. Safety Act. Further, after considering the totality of the information, we find that the requirements of today's rule are the most cost-effective way of achieving the objectives of the K.T. Safety Act.

TABLE 17—ESTIMATED COST EFFECTIVENESS

	Cost per Equivalent Life Saved
Rearview Video Systems.	$15.9 to $26.3 million.*

*The range presented is from a 3% to 7% discount rate.

To devise an appropriate regulatory approach to address the safety risks presented by backover crashes and the requirements of the K.T. Safety Act, the agency considered various technologies and applications of those technologies over the course of this rulemaking, beginning with the ANPRM and continuing through to the development of this final rule. As previously noted, the three main technologies considered included rearview video systems, sensor systems, and additional rearview mirrors. While various commenters suggested alternative sensor-based systems, none of these systems were able to address our concerns that the data indicate that without visual confirmation of the presence of a child or other pedestrian behind the vehicle, sensors simply did not induce a sufficient and timely response from the driver so as to avoid the crash. While rearview video systems were the most expensive technology considered, the agency's research found that rearview video systems were also the only effective technology. Because of the significantly lower effectiveness of sensor systems that do not afford the driver a visual image of the area behind the vehicle, the NPRM estimated a significantly higher cost per equivalent life saved for rear object detection sensor systems than rearview video systems. In spite of the lower per vehicle cost estimate for sensor systems in the NPRM, their very low effectiveness resulted in the agency's estimating that the cost per equivalent life saved by these sensor systems would be between $95.5 and $192.3 million. While the new information that the agency received through the day care study has improved the estimated effectiveness of sensor systems somewhat, the agency still estimates that the cost per equivalent life saved for sensor systems would range from $44.6 to $94.1 million.[159] This means

[158] The benefits estimates in this paragraph are expressed in ranges. Each range represents the highest and lowest figure when considering the different discount rates and camera types. However, the same combination of camera type and discount rate do not produce the highest and lowest figure in each of the ranges specified in this paragraph. Thus, the sum of highest and lowest figures in fatality/injury reduction benefits range and the property damage only benefits range do not correspond to the highest and lowest figures in the total benefits range. The Final Regulatory Impact Analysis contains the exact figures that show the total monetized benefit (as the sum of the fatality, injury, and property damage reduction benefits) for each combination of camera type and discount, available in the docket number referenced at the beginning of this document.

[159] For further information, please reference the Final Regulatory Impact Analysis prepared in support of this final rule, available in the docket number referenced at the beginning of this document.

that sensors would cost more than twice the amount per life saved when compared to rearview video technology. Thus, the agency continues to believe that rearview video systems are significantly more cost effective than rear sensor systems and that rearview video systems are the most cost effective technology available that can address the backover safety concern. While we believe that the statutory mandate in the K.T. Safety Act compels the agency to take regulatory action to address the backover safety risk (even in situations where the regulatory action may not be cost beneficial when comparing monetized cost to benefits), we believe that mandate is more rationally achieved through the alternative that saves substantially more lives at substantially less cost per life than the potential alternatives.

Finally, while the agency considered the application of rear visibility countermeasures to certain vehicle types or size, the agency understands the requirements of the K.T. Safety Act as directing the agency to make revisions to FMVSS No. 111 to expand the required field of view for all vehicles with a GVWR under 10,000 pounds except for motorcycles and trailers. Although the agency is afforded the limited discretion of applying different rear visibility countermeasures to different vehicle types, the agency does not believe that the effectiveness data from our research or our cost estimates support applying a different rear visibility countermeasure based on vehicle type. As mentioned above, to apply sensor or mirror-based countermeasures, instead of the rear visibility system requirements of today's final rule, to certain vehicle types would forgo important safety benefits. Further, such application would increase the cost per equivalent life saved as the reduction in the costs of these alternative countermeasures would not offset the greater reduction in the effectiveness of the countermeasure. Given this information, the agency concludes in today's final rule that the rear visibility systems required in today's rule are the only effective means of achieving a meaningful reduction in backover crash fatalities and injuries.

Therefore, after considering the aforementioned technological and regulatory alternatives, the agency reiterates its conclusion above that the rear visibility systems required under today's rule are not only the single effective way of addressing the backover safety risk and meeting the requirements of the K.T. Safety Act, but also the most cost effective way of doing so.

V. Regulatory Analyses

Executive Order 12866, Executive Order 13563, and DOT Regulatory Policies and Procedures

Executive Order 12866, Executive Order 13563, and the Department of Transportation's regulatory policies require this agency to make determinations as to whether a regulatory action is ''significant'' and therefore subject to OMB review and the requirements of the aforementioned Executive Orders. The Executive Order 12866 defines a ''significant regulatory action'' as one that is likely to result in a rule that may:

(1) Have an annual effect on the economy of $100 million or more or adversely affect in a material way the economy, a sector of the economy, productivity, competition, jobs, the environment, public health or safety, or State, local, or Tribal governments or communities;

(2) Create a serious inconsistency or otherwise interfere with an action taken or planned by another agency;

(3) Materially alter the budgetary impact of entitlements, grants, user fees, or loan programs or the rights and obligations of recipients thereof; or

(4) Raise novel legal or policy issues arising out of legal mandates, the President's priorities, or the principles set forth in the Executive Order.

We have considered the potential impact of this final rule under Executive Order 12866, Executive Order 13563, and the Department of Transportation's regulatory policies and procedures and have determined that today's final rule is economically significant. This rulemaking is economically significant because it is likely to have an annual effect on the economy of $100 million or more. Thus it was reviewed by the Office of Management and Budget under E.O. 12866 and 13563. The rulemaking action has also been determined to be significant under the Department's regulatory policies and procedures. The regulatory impact analysis (RIA) fully discusses the estimated costs and benefits of this rulemaking action. The costs and benefits are also summarized in section IV of this preamble, *supra.*

Executive Order 13609: Promoting International Regulatory Cooperation

The policy statement in section 1 of Executive Order 13609 provides, in part:

> The regulatory approaches taken by foreign governments may differ from those taken by U.S. regulatory agencies to address similar issues. In some cases, the differences between the regulatory approaches of U.S. agencies and those of their foreign counterparts might not be necessary and might impair the ability of American businesses to export and compete internationally. In meeting shared challenges involving health, safety, labor, security, environmental, and other issues, international regulatory cooperation can identify approaches that are at least as protective as those that are or would be adopted in the absence of such cooperation. International regulatory cooperation can also reduce, eliminate, or prevent unnecessary differences in regulatory requirements.

NHTSA is not currently aware of any ''regulatory approaches taken by foreign governments'' that would address the safety concerns raised in this rulemaking. While today's amendments to FMVSS No. 111 establish new requirements, the agency is not aware of any approaches taken by foreign governments that would address Congress' concern in the K.T. Safety Act regarding fatalities and injuries resulting from backover crashes. Thus, the agency is not aware of any such approach that would be at least as protective as the approach adopted by the agency in today's final rule.

Regulatory Flexibility Act

Pursuant to the Regulatory Flexibility Act (5 U.S.C. 601 et seq., as amended by the Small Business Regulatory Enforcement Fairness Act (SBREFA) of 1996), whenever an agency is required to publish a notice of proposed rulemaking or final rule, it must prepare and make available for public comment a regulatory flexibility analysis that describes the effect of the rule on small entities (i.e., small businesses, small organizations, and small governmental jurisdictions). The Small Business Administration's regulations at 13 CFR Part 121 define a small business, in part, as a business entity ''which operates primarily within the United States.'' (13 CFR 121.105(a)). No regulatory flexibility analysis is required if the head of an agency certifies the proposal will not have a significant economic impact on a substantial number of small entities. SBREFA amended the Regulatory Flexibility Act to require Federal agencies to provide a statement of the factual basis for certifying that a proposal will not have a significant economic impact on a substantial number of small entities.

I hereby certify that this proposed rule would not have a significant economic impact on a substantial number of small entities. We believe that the rulemaking will not have a significant economic impact on the small vehicle manufacturers because the systems are not technically difficult to develop or install and the cost of the systems ($44 to $147) is a small proportion of the

overall vehicle cost for most of these specialty cars.

Today's final rule will directly affect motor vehicle manufacturers and final-stage manufacturers. The majority of motor vehicle manufacturers will not qualify as a small business. There are ten manufacturers of passenger cars that are small businesses.[160] These manufacturers, along with manufacturers that do not qualify as a small business, are already required to comply with the current mirror requirements of FMVSS No. 111. Similarly, there are several manufacturers of low-speed vehicles that are small businesses.[161] Previously, FMVSS No. 111 did not apply to low-speed vehicles, although they were required to have basic mirrors pursuant to FMVSS No. 500, Low-speed vehicles (including the option of having either an exterior driver-side mirror or an interior rearview mirror). The addition of a rearview video system can be accomplished via the purchase of an exterior video camera, integration of a console video screen or the addition of an interior rearview mirror-mounted screen, and wiring to connect the two as well as to connect them to the vehicle.

Because the K.T. Safety Act applies to all motor vehicles with a GVWR of 10,000 pounds or less (except motorcycles and trailers) in its mandate to reduce backovers, all of these small manufacturers are affected by the requirements in today's final rule. However, the economic impact upon these entities will not be significant for the following reasons.

(1) Potential cost increases are small compared to the price of the vehicles being manufactured.

(2) Today's final rule provides four years lead-time, the limit permitted by the K.T. Safety Act, and will allow small volume manufacturers the option of waiting until the end of the phase-in (until May 1, 2018) to meet the rear visibility requirements.[162]

In the NPRM, the agency had also considered several alternatives that could help to reduce the burden on small businesses. The agency considered an alternative under which passenger cars would be required to be equipped with either a visibility system or with a system that utilizes an ultrasonic sensor that monitors the specified area behind the vehicle and an audible warning. This alternative would have lower installation costs but also substantially lower safety benefits. Thus, it would have significantly higher costs per equivalent life saved.

Executive Order 13132 (Federalism)

NHTSA has examined today's final rule pursuant to Executive Order 13132 (64 FR 43255, August 10, 1999) and concluded that no additional consultation with States, local governments or their representatives is mandated beyond the rulemaking process. The agency has concluded that the rulemaking would not have sufficient federalism implications to warrant consultation with State and local officials or the preparation of a federalism summary impact statement. Today's final rule does not have ''substantial direct effects on the States, on the relationship between the national government and the States, or on the distribution of power and responsibilities among the various levels of government.''

NHTSA rules can have preemptive effect in two ways. First, the National Traffic and Motor Vehicle Safety Act contains an express preemption provision:

When a motor vehicle safety standard is in effect under this chapter, a State or a political subdivision of a State may prescribe or continue in effect a standard applicable to the same aspect of performance of a motor vehicle or motor vehicle equipment only if the standard is identical to the standard prescribed under this chapter.

49 U.S.C. 30103(b)(1). It is this statutory command by Congress that preempts any non-identical State legislative and administrative law addressing the same aspect of performance.

The express preemption provision described above is subject to a savings clause under which ''[c]ompliance with a motor vehicle safety standard prescribed under this chapter does not exempt a person from liability at common law.'' 49 U.S.C. 30103(e) Pursuant to this provision, State common law tort causes of action against motor vehicle manufacturers that might otherwise be preempted by the express preemption provision are generally preserved. However, the Supreme Court has recognized the possibility, in some instances, of implied preemption of State common law tort causes of action by virtue of NHTSA's rules—even if not expressly preempted.

This second way that NHTSA rules can preempt is dependent upon the existence of an actual conflict between an FMVSS and the higher standard that would effectively be imposed on motor vehicle manufacturers if someone obtained a State common law tort judgment against the manufacturer—notwithstanding the manufacturer's compliance with the NHTSA standard. Because most NHTSA standards established by an FMVSS are minimum standards, a State common law tort cause of action that seeks to impose a higher standard on motor vehicle manufacturers will generally not be preempted. However, if and when such a conflict does exist—for example, when the standard at issue is both a minimum and a maximum standard—the State common law tort cause of action is impliedly preempted. See *Geier v. American Honda Motor Co.,* 529 U.S. 861 (2000).

Pursuant to Executive Order 13132, NHTSA has considered whether this rule could or should preempt State common law causes of action. The agency's ability to announce its conclusion regarding the preemptive effect of one of its rules reduces the likelihood that preemption will be an issue in any subsequent tort litigation.

To this end, the agency has examined the nature (e.g., the language and structure of the regulatory text) and objectives of today's final rule and finds that this rule, like many NHTSA rules, prescribes only a minimum safety standard. Accordingly, NHTSA does not intend that this final rule preempt state tort law that would effectively impose a higher standard on motor vehicle manufacturers than that established by today's final rule. Establishment of a higher standard by means of State tort law would not conflict with the minimum standard established in this document. Without any conflict, there could not be any implied preemption of a State common law tort cause of action.

NHTSA solicited comments from the States and other interested parties on this assessment of issues relevant to E.O. 13132 in the NPRM. However, we did not receive any comments with regard to this issue.

Executive Order 12988 (Civil Justice Reform)

When promulgating a regulation, Executive Order 12988 specifically requires that the agency must make every reasonable effort to ensure that the regulation, as appropriate: (1) Specifies in clear language the preemptive effect; (2) specifies in clear language the effect

[160] Carbon Motor, CODA, Fisker Automotive Inc., GGT Electric, Mosler Automotive, Panoz Auto Development Company, Saleen, Shelby American Inc., Standard Taxi, Tesla Motors Inc.

[161] Columbia ParCar Corp., Club Car, LLC, Miles Electric Vehicles LLC, STAR Electric Car Sales, Tomberlin, Wheego Electric Cars, Inc., and Wildfire.

[162] While the agency currently does not have information that would show how long it would take for small manufacturers to implement the requirements in today's final rule, we do not have the statutory flexibility to afford small manufacturers more lead time beyond the four-year statutory limit.

on existing Federal law or regulation, including all provisions repealed, circumscribed, displaced, impaired, or modified; (3) provides a clear legal standard for affected conduct rather than a general standard, while promoting simplification and burden reduction; (4) specifies in clear language the retroactive effect; (5) specifies whether administrative proceedings are to be required before parties may file suit in court; (6) explicitly or implicitly defines key terms; and (7) addresses other important issues affecting clarity and general draftsmanship of regulations. Pursuant to this Order, NHTSA notes as follows. The preemptive effect of this final rule is discussed above in connection with Executive Order 13132. NHTSA notes further that there is no requirement that individuals submit a petition for reconsideration or pursue other administrative proceeding before they may file suit in court.

Executive Order 13045 (Protection of Children From Environmental Health and Safety Risks)

Executive Order 13045, ''Protection of Children from Environmental Health and Safety Risks,'' (62 FR 19885; April 23, 1997) applies to any proposed or final rule that: (1) Is determined to be ''economically significant,'' as defined in Executive Order 12866, and (2) concerns an environmental health or safety risk that NHTSA has reason to believe may have a disproportionate effect on children. If a rule meets both criteria, the agency must evaluate the environmental health or safety effects of the rule on children, and explain why the rule is preferable to other potentially effective and reasonably feasible alternatives considered by the agency.

Today's final rule is subject to Executive Order 13045 because it is economically significant and available data demonstrate that the safety risk addressed by this proposal disproportionately involves children, especially very young ones. As the safety risk to children is a central concern of this rulemaking, the issues that must be analyzed under this Executive Order are discussed extensively in the preamble above and in the RIA.

National Technology Transfer and Advancement Act

Under the National Technology Transfer and Advancement Act of 1995 (NTTAA) (Pub.L. 104–113), ''all Federal agencies and departments shall use technical standards that are developed or adopted by voluntary consensus standards bodies, using such technical standards as a means to carry out policy objectives or activities determined by the agencies and departments.'' Voluntary consensus standards are technical standards (e.g., materials specifications, test methods, sampling procedures, and business practices) that are developed or adopted by voluntary consensus standards bodies, such as the Society of Automotive Engineers (SAE). The NTTAA directs us to provide Congress, through OMB, explanations when we decide not to use available and applicable voluntary consensus standards.

Pursuant to the above requirements, the agency conducted a review of voluntary consensus standards to determine if any were applicable to today's final rule. While the agency did not discover any voluntary consensus standards that can be applied to the entirety of rear visibility systems, we found various voluntary consensus standards which could be utilized for durability and luminance requirements for today's final rule. The agency considered the possibility of using these voluntary consensus standards. However, we have found these standards to be unsuitable for incorporation into an FMVSS at this time. Our analysis of each of the applicable voluntary consensus standards can be found in our discussion of the durability and luminance requirements in earlier sections of this preamble. Further, in response to comments, NHTSA endeavored to establish requirements that are as performance based and technologically-neutral as possible, to allow maximum design freedom while still meeting the performance requirements needed for safety.

Unfunded Mandates Reform Act

The Unfunded Mandates Reform Act of 1995 requires agencies to prepare a written assessment of the costs, benefits and other effects of proposed or final rules that include a Federal mandate likely to result in the expenditure by State, local or tribal governments, in the aggregate, or by the private sector, of more than $100 million annually (adjusted for inflation with base year of 1995). NHTSA must comply with that requirement in connection with this rulemaking as today's final rule would result in expenditures by the private sector of over $100 million annually.

As noted previously, the agency has prepared a detailed economic assessment in the RIA. In that assessment, the agency analyzes the benefits and costs of the rear visibility systems required under today's final rule for passenger cars, MPVs, trucks, buses, and low-speed vehicles with a GVWR of 10,000 pounds or less. NHTSA's analysis indicates that today's final rule could result in private expenditures of up to $1.7 billion annually.

The RIA and the PRIA (published in conjunction with the NPRM) analyzed the expected benefits and costs of alternative countermeasure options, including mirrors, cameras, and sensors, as specified in the K.T. Safety Act. The agency subjected several types of each class of countermeasure to thorough effectiveness testing and cost-benefit analysis. Additionally, the agency previously published a detailed ANPRM, NPRM, and PRIA, in order to explain its thoughts on the technological solutions available and solicit information on costs, benefits, and applications on all possible solutions to the safety concern. NHTSA received a large variety of comments on the ANPRM, NPRM, and PRIA and used that information in formulating today's final rule.

As explained in detail in the RIA and the preamble for today's final rule, after carefully exploring all possible alternatives to meet the statutory mandate of the Act, NHTSA concluded that rearview video systems offer not only the highest overall benefits, but also the most efficient cost per life saved ratio.

In addition, NHTSA has performed a probabilistic uncertainty analysis to examine the degree of uncertainty in its cost and benefit estimates and included that analysis in the RIA.

National Environmental Policy Act

NHTSA has analyzed this rulemaking action for the purposes of the National Environmental Policy Act. The agency has determined that implementation of this action would not have any significant impact on the quality of the human environment.

Paperwork Reduction Act

Under the Paperwork Reduction Act of 1995 (PRA), a person is not required to respond to a collection of information by a Federal agency unless the collection displays a valid OMB control number. Today's final rule includes a collection of information, i.e., the phase-in reporting requirements. If approved, these requirements would require manufacturers of passenger cars and of trucks, buses, MPVs, and low-speed vehicles with a GVWR of 10,000 pounds or less, to annually submit a report for each of two years (with requirements in the phase-in period) concerning the number of such vehicles that meet the rear visibility system requirements. In

the preamble of the NPRM, the agency solicited public comment on the following information collection request. In response, the agency did not receive any comments.

Accordingly, the Department of Transportation is submitting the following information collection request to OMB for review and clearance under the PRA. The following information is identical to the information the agency offered for public comment in the NPRM except that the agency discovered an error in the *Estimated Costs* calculation and in the estimated number of manufacturers. While the agency believes that this information request will create a small recordkeeping burden on the manufacturers, we do not expect that manufacturers will incur any additional costs beyond that recordkeeping burden. Thus, we have adjusted the *Estimated Costs* to be $0. In addition, while the agency correctly calculated 42 total burden hours (2 hours per manufacturer), the agency stated, in error, that there were 24 total manufacturers. We have corrected the number of manufacturers to 21 and the total burden hours continue to be 42 total hours. The agency will complete the information collection request process before the beginning of the phase-in schedule on May 1, 2016.

Agency: National Highway Traffic Safety Administration (NHTSA).

Title: Phase-In Production Reporting Requirements for Rear Visibility Systems.

Type of Request: New request.

OMB Clearance Number: None assigned.

Form Number: This collection of information will not use any standard forms.

Affected Public: The respondents are manufacturers of passenger cars, multipurpose passenger vehicles, trucks, buses, and low-speed vehicles having a gross vehicle weight rating of 4,536 kg (10,000 pounds) or less. The agency estimates that there are approximately 21 such manufacturers.

Estimate of the Total Annual Reporting and Recordkeeping Burden Resulting from the Collection of Information: NHTSA estimates that the total annual burden is 42 hours (2 hours per manufacturer per year). Two reports per manufacturer would be collected.

Estimated Costs: NHTSA estimates that the total annual cost burden, in U.S. dollars, will be $0. No additional resources would be expended by vehicle manufacturers to gather annual production information because they already compile this data for their own purposes.

Summary of the Collection of Information: This collection would require manufacturers of passenger cars, multipurpose passenger vehicles, trucks, buses, and low-speed vehicles having a gross vehicle weight rating of 4,536 kg (10,000 pounds) or less to provide motor vehicle production data for the following two years: May 1, 2016 through April 30, 2017; and May 1, 2017 through April 30, 2018.

Description of the Need for the Information and the Proposed Use of the Information: The purpose of the reporting requirements will be to aid NHTSA in determining whether a manufacturer has complied with the requirements of Federal Motor Vehicle Safety Standard No. 111, Rear visibility, during the phase-in of new requirements for rear visibility systems.

Regulation Identifier Number (RIN)

The Department of Transportation assigns a regulation identifier number (RIN) to each regulatory action listed in the Unified Agenda of Federal Regulations. The Regulatory Information Service Center publishes the Unified Agenda in April and October of each year. You may use the RIN contained in the heading at the beginning of this document to find this action in the Unified Agenda.

VI. Regulatory Text

List of Subjects in 49 CFR Part 571

Imports, incorporation by reference, motor vehicle safety, reporting and recordkeeping, tires.

In consideration of the foregoing, NHTSA amends 49 CFR part 571 as follows:

PART 571—FEDERAL MOTOR VEHICLE SAFETY STANDARDS

■ 1. The authority citation for Part 571 of Title 49 continues to read as follows:

Authority: 49 U.S.C. 322, 30111, 30115, 30117, and 30166; delegation of authority at 49 CFR 1.95.

■ 2. Section 571.5 is amended by revising paragraphs (d)(5) and (k)(26) to read as follows:

§ 571.5 Matter incorporated by reference.

* * * * *

(d) * * *

(5) ASTM B117–03, ''Standard Practice for Operating Salt Spray (Fog) Apparatus,'' approved October 1, 2003, into §§ 571.106; 571.111.

* * * * *

(k) * * *

(26) SAE Standard J826 JUL95, ''Devices for Use in Defining and Measuring Vehicle Seating Accommodation,'' revised July 1995, into §§ 571.10; 571.111; 571.202; 571.202a; 571.216a.

* * * * *

■ 3. Section 571.111 is amended by
■ a. Revising the section heading;
■ b. Revising S1;
■ c. Revising S3;
■ d. Adding, in alphabetical order, the definitions of ''Backing event,'' ''Environmental test fixture,'' ''External component,'' ''Key,'' ''Limited line manufacturer,'' ''Rearview image,'' ''Rear visibility system,'' ''Small manufacturer,'' and ''Starting system'' to S4;
■ e. Adding S5.5 through S5.5.7;
■ f. Revising S6;
■ g. Adding S6.2 through S6.2.7;
■ h. Adding S14 through S14.3;
■ i. Adding S15 through S15.7; and
■ j. Adding Figures 5 and 6 to read as follows:

§ 571.111 Standard No. 111; Rear visibility.

S1. *Scope.* This standard specifies requirements for rear visibility devices and systems.

* * * * *

S3. *Application.* This standard applies to passenger cars, multipurpose passenger vehicles, trucks, buses, school buses, motorcycles and low-speed vehicles.

S4. * * *

Backing event means an amount of time which starts when the vehicle's direction selector is placed in reverse, and ends at the manufacturer's choosing, when the vehicle forward motion reaches:

(a) a speed of 10 mph,

(b) a distance of 10 meters traveled, or

(c) a continuous duration of 10 seconds.

* * * * *

Environmental test fixture means a device designed to support the external components of the rear visibility system for testing purposes, using any factory seal which would be used during normal vehicle operation, in a manner that simulates the on-vehicle component orientation during normal vehicle operation, and prevents the exposure of any test conditions to portions of the external component which are not exposed to the outside of the motor vehicle.

External component means any part of the rear visibility system which is exposed to the outside of the motor vehicle.

Key means a physical device or an electronic code which, when inserted into the starting system (by physical or electronic means), enables the vehicle operator to activate the engine or motor.

Limited line manufacturer means a manufacturer that sells three or fewer carlines, as that term is defined in 49 CFR 583.4, in the United States during a production year, as that term is defined in S15.

Rearview image means a visual image, detected by means of a single source, of the area directly behind a vehicle that is provided in a single location to the vehicle operator and by means of indirect vision.

Rear visibility system means the set of devices or components which together perform the function of producing the rearview image as required under this standard.

Small manufacturer means an original vehicle manufacturer that produces or assembles fewer than 5,000 vehicles annually for sale in the United States.

Starting system means the vehicle system used in conjunction with the key to activate the engine or motor.

* * * * *

S5.5 *Rear visibility.*

(a) *Phase-in period requirements.* For passenger cars with a GVWR of 4,536 kg or less manufactured on or after May 1, 2016, but not later than April 30, 2018, a percentage of each manufacturer's production, as specified in S15, shall display a rearview image meeting the requirements of S5.5.1.

(b) *Final requirements.* Each passenger car with a GVWR of 4,536 kg or less manufactured on or after May 1, 2018, shall display a rearview image meeting the requirements of S5.5.1 through S5.5.7.

S5.5.1 *Field of view.* When tested in accordance with the procedures in S14.1, the rearview image shall include:

(a) A minimum of a 150-mm wide portion along the circumference of each test object located at positions F and G specified in S14.1.4; and

(b) The full width and height of each test object located at positions A through E specified in S14.1.4.

S5.5.2 *Size.* When the rearview image is measured in accordance with the procedures in S14.1, the calculated visual angle subtended by the horizontal width of

(a) All three test objects located at positions A, B, and C specified in S14.1.4 shall average not less than 5 minutes of arc; and

(b) Each individual test object (A, B, and C) shall not be less than 3 minutes of arc.

S5.5.3 *Response time.* The rearview image meeting the requirements of S5.5.1 and S5.5.2, when tested in accordance with S14.2, shall be displayed within 2.0 seconds of the start of a backing event.

S5.5.4 *Linger time.* The rearview image meeting the requirements of S5.5.1 and S5.5.2 shall not be displayed after the backing event has ended.

S5.5.5 *Deactivation.* The rearview image meeting the requirements of S5.5.1 and S5.5.2 shall remain visible during the backing event until either, the driver modifies the view, or the vehicle direction selector is removed from the reverse position.

S5.5.6 *Default view.* The rear visibility system must default to the rearview image meeting the requirements of S5.5.1 and S5.5.2 at the beginning of each backing event regardless of any modifications to the field of view the driver has previously selected.

S5.5.7 *Durability.* The rear visibility system shall meet the field of view and image size requirements of S5.5.1 and S5.5.2 after each durability test specified in S14.3.1, S14.3.2, and S14.3.3.

S6. *Requirements for multipurpose passenger vehicles, low-speed vehicles, trucks, buses, and school buses with GVWR of 4,536 kg or less.*

* * * * *

S6.2 *Rear visibility.*

(a) *Phase-in period requirements.* For multipurpose passenger vehicles, low-speed vehicles, trucks, buses, and school buses with a GVWR of 4,536 kg or less manufactured on or after May 1, 2016, but not later than April 30, 2018, a percentage of each manufacturer's production, as specified in S15, shall display a rearview image meeting the requirements of S6.2.1.

(b) *Final requirements.* Each multipurpose passenger vehicle, low-speed vehicle, truck, bus, and school bus with a GVWR of 4,536 kg or less manufactured on or after May 1, 2018, shall display a rearview image meeting the requirements of S6.2.1 through S6.2.7.

S6.2.1 *Field of view.* When tested in accordance with the procedures in S14.1, the rearview image shall include:

(a) A minimum of a 150-mm wide portion along the circumference of each test object located at positions F and G specified in S14.1.4; and

(b) The full width and height of each test object located at positions A through E specified in S14.1.4.

S6.2.2 *Size.* When the rearview image is measured in accordance with the procedures in S14.1, the calculated visual angle subtended by the horizontal width of

(a) All three test objects located at positions A, B, and C specified in S14.1.4 shall average not less than 5 minutes of arc; and

(b) Each individual test object (A, B, and C) shall not be less than 3 minutes of arc.

S6.2.3 *Response time.* The rearview image meeting the requirements of S6.2.1 and S6.2.2, when tested in accordance with S14.2, shall be displayed within 2.0 seconds of the start of a backing event.

S6.2.4 *Linger time.* The rearview image meeting the requirements of S6.2.1 and S6.2.2 shall not be displayed after the backing event has ended.

S6.2.5 *Deactivation.* The rearview image meeting the requirements of S6.2.1 and S6.2.2 shall remain visible during the backing event until either, the driver modifies the view, or the vehicle direction selector is removed from the reverse position.

S6.2.6 *Default view.* The rear visibility system must default to the rearview image meeting the requirements of S6.2.1 and S6.2.2 at the beginning of each backing event regardless of any modifications to the field of view the driver has previously selected.

S6.2.7 *Durability.* The rear visibility system shall meet the field of view and image size requirements of S6.2.1 and S6.2.2 after each durability test specified in S14.3.1, S14.3.2, and S14.3.3.

* * * * *

S14. *Rear visibility test procedure.*

S14.1 *Field of view and image size test procedure.*

S14.1.1 *Lighting.* The ambient illumination conditions in which testing is conducted consists of light that is evenly distributed from above and is at an intensity of between 7,000 lux and 10,000 lux, as measured at the center of the exterior surface of the vehicle's roof.

S14.1.2 *Vehicle conditions.*

S14.1.2.1 *Tires.* The vehicle's tires are set to the vehicle manufacturer's recommended cold inflation pressure.

S14.1.2.2 *Fuel tank loading.* The fuel tank is full.

S14.1.2.3 *Vehicle load.* The vehicle is loaded to simulate the weight of the driver and four passengers or the designated occupant capacity, if less. The weight of each occupant is represented by 45 kg resting on the seat pan and 23 kg resting on the vehicle floorboard placed in the driver's designated seating position and any other available designated seating position.

S14.1.2.4 *Rear hatch and trunk lids.* If the vehicle is equipped with rear hatches or trunk lids, they are closed and latched in their normal vehicle operating condition.

S14.1.2.5 *Driver's seat positioning.*

S14.1.2.5.1 Adjust the driver's seat to the midpoint of the longitudinal

adjustment range. If the seat cannot be adjusted to the midpoint of the longitudinal adjustment range, the closest adjustment position to the rear of the midpoint shall be used.

S14.1.2.5.2 Adjust the driver's seat to the lowest point of all vertical adjustment ranges present.

S14.1.2.5.3 Using the three dimensional SAE Standard J826 JUL95 (incorporated by reference, see § 571.5) manikin, adjust the driver's seat back angle at the vertical portion of the H-point machine's torso weight hanger to 25 degrees. If this adjustment setting is not available, adjust the seat-back angle to the positional detent setting closest to 25 degrees in the direction of the manufacturer's nominal design riding position.

S14.1.3 *Test object.* Each test object is a right circular cylinder that is 0.8 m high and 0.3 m in external diameter. There are seven test objects, designated A through G, and they are marked as follows.

(a) Test objects A, B, C, D, and E are marked with a horizontal band encompassing the uppermost 150 mm of the side of the cylinder.

(b) Test objects F and G are marked on the side with a solid vertical stripe of 150 mm width extending from the top to the bottom of each cylinder.

(c) Both the horizontal band and vertical stripe shall be of a color that contrasts with both the rest of the cylinder and the test surface.

S14.1.4 *Test object locations and orientation.* Place the test objects at locations specified in S14.1.4(a)-(f) and illustrated in Figure 5. Measure the distances shown in Figure 5 from a test object to another test object or other object from the cylindrical center (axis) of the test object as viewed from above. Each test object is oriented so that its axis is vertical.

(a) Place test objects F and G so that their centers are in a transverse vertical plane that is 0.3 m to the rear of a transverse vertical plane tangent to the rearmost surface of the rear bumper.

(b) Place test objects D and E so that their centers are in a transverse vertical plane that is 3.05 m to the rear of a transverse vertical plane tangent to the rearmost surface of the rear bumper.

(c) Place test objects A, B and C so that their centers are in a transverse vertical plane that is 6.1 m to the rear of a transverse vertical plane tangent to the rearmost surface of the rear bumper.

(d) Place test object B so that its center is in a longitudinal vertical plane passing through the vehicle's longitudinal centerline.

(e) Place test objects C, E, and G so that their centers are in a longitudinal vertical plane located 1.52 m, measured laterally and horizontally, to the right of the vehicle longitudinal center line.

(f) Place test objects A, D, and F so that their centers are in a longitudinal vertical plane located 1.52 m, measured laterally and horizontally, to the left of the vehicle longitudinal center line.

S14.1.5 *Test reference point.* Obtain the test reference point using the following procedure.

(a) Locate the center of the forward-looking eye midpoint (M_f) illustrated in Figure 6 so that it is 635 mm vertically above the H point (H) and 96 mm aft of the H point.

(b) Locate the head/neck joint center (J) illustrated in Figure 6 so that it is 100 mm rearward of M_f and 588 mm vertically above the H point.

(c) Draw an imaginary horizontal line between M_f and a point vertically above J, defined as J_2.

(d) Rotate the imaginary line about J_2 in the direction of the rearview image until the straight-line distance between M_f and the center of the display used to present the rearview image required in this standard reaches the shortest possible value.

(e) Define this new, rotated location of M_f to be M_r (eye midpoint rotated).

S14.1.6 *Display adjustment.* If the display is mounted with a rotational adjustment mechanism, adjust the display such that the surface of the display is normal to the imaginary line traveling through M_r and J_2 or as near to normal as the display adjustment will allow.

S14.1.7 *Steering wheel adjustment.* The steering wheel is adjusted to the position where the longitudinal centerline of all vehicle tires are parallel to the longitudinal centerline of the vehicle. If no such position exists, adjust the steering wheel to the position where the longitudinal centerline of all vehicle tires are closest to parallel to the longitudinal centerline of the vehicle.

S14.1.8 *Measurement procedure.*

(a) Locate a 35 mm or larger format still camera, video camera, or digital equivalent such that the center of the camera's image plane is located at M_r and the camera lens is directed at the center of the display's rearview image.

(b) Affix a ruler at the base of the rearview image in an orientation perpendicular with a test object cylinder centerline. If the vehicle head restraints obstruct the camera's view of the display, they may be adjusted or removed.

(c) Photograph the image of the visual display with the ruler included in the frame and the rearview image displayed.

S14.1.8.1 *Extract photographic data.*

(a) Using the photograph, measure the apparent length, of a 50 mm delineated section of the in-photo ruler, along the ruler's edge, closest to the rearview image and at a point near the horizontal center of the rearview image.

(b) Using the photograph, measure the horizontal width of the colored band at the upper portion of each of the three test objects located at positions A, B, and C in Figure 5.

(c) Define the measured horizontal widths of the colored bands of the three test objects as d_a, d_b, and d_c.

S14.1.8.2 *Obtain scaling factor.* Using the apparent length of the 50 mm portion of the ruler as it appears in the photograph, divide this apparent length by 50 mm to obtain a scaling factor. Define this scaling factor as s_{scale}.

S14.1.8.3 *Determine viewing distance.* Determine the actual distance from the rotated eye midpoint location (M_r) to the center of the rearview image. Define this viewing distance as a_{eye}.

S14.1.8.4 *Calculate visual angle subtended by test objects.* Use the following equation to calculate the subtended visual angles:

$$\theta_i = 60 \sin^{-1}\left(\frac{d_i}{a_{eye} s_{scale}}\right)$$

where *i* can take on the value of either *test object A, B,* or *C,* and arcsine is calculated in units of degrees.

S14.2 *Image response time test procedure.* The temperature inside the vehicle during this test is any temperature between 15°C and 25°C. Immediately prior to commencing the actions listed in subparagraphs (a)–(c) of this paragraph, all components of the rear visibility system are in a powered off state. Then:

(a) Open the driver's door to any width,

(b) Close the driver's door

(c) Activate the starting system using the key, and

(d) Select the vehicle's reverse direction at any time not less than 4.0 seconds and not more than 6.0 seconds after the driver's door is opened. The driver door is open when the edge of the driver's door opposite of the door's hinge is no longer flush with the exterior body panel.

S14.3 *Durability test procedures.* For the durability tests specified in S14.3.1, S14.3.2, and S14.3.3, the external components are mounted on an environmental test fixture.

S14.3.1 *Corrosion test procedure.* The external components are subjected to two 24-hour corrosion test cycles. In each corrosion test cycle, the external components are subjected to a salt spray (fog) test in accordance with ASTM

B117–03 (incorporated by reference, see § 571.5) for a period of 24 hours. Allow 1 hour to elapse without spray between the two test cycles.

S14.3.2 *Humidity exposure test procedure.* The external components are subjected to 24 consecutive 3-hour humidity test cycles. In each humidity test cycle, external components are subjected to a temperature of 100°+7° − 0° F (38°+4° − 0° C) with a relative humidity of not less than 90% for a period of 2 hours. After a period not to exceed 5 minutes, the external components are subjected to a temperature of 32° +5° − 0 °F (0° +3° − 0° C) and a humidity of not more than 30% ± 10% for 1 hour. Allow no more than 5 minutes to elapse between each test cycle.

S14.3.3 *Temperature exposure test procedure.* The external components are subjected to 4 consecutive 2-hour temperature test cycles. In each temperature test cycle, the external components are first subjected to a temperature of 176° ± 5 °F (80° ± 3° C) for a period of one hour. After a period not to exceed 5 minutes, the external components are subjected to a temperature of 32° +5° − 0 °F (0° +3° -0° C) for 1 hour. Allow no more than 5 minutes to elapse between each test cycle.

BILLING CODE 4910–59–P

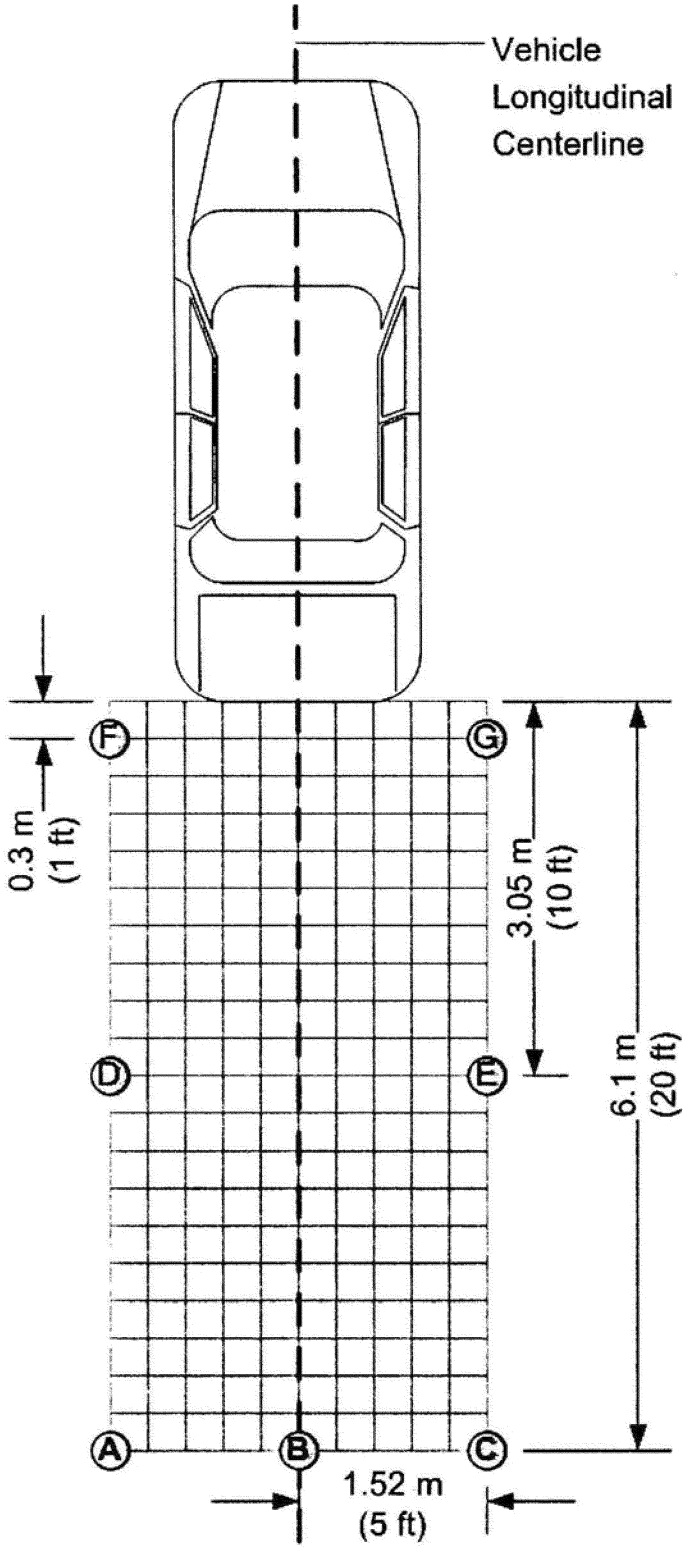

FIGURE 5: TEST CYLINDER LOCATIONS

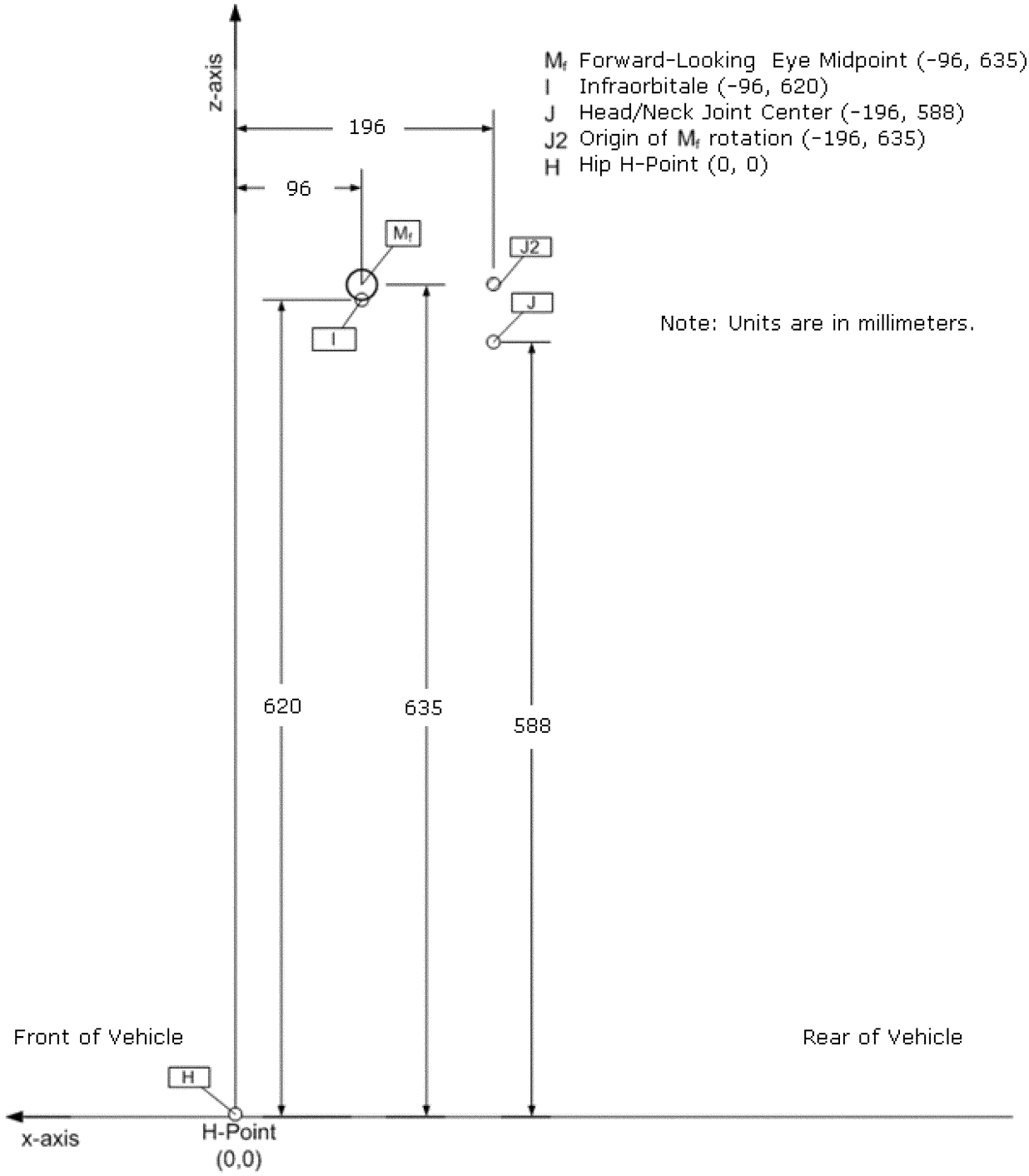

FIGURE 6: EYE MIDPOINT LOCATION (M_f) IN THE MID-SAGITTAL PLANE WITH RESPECT TO H POINT FOR FORWARD-LOOKING 50TH PERCENTILE MALE DRIVER SEATED WITH 25 DEGREE SEAT BACK ANGLE

BILLING CODE 4910–59–C

S15 *Rear visibility phase-in schedule.* For the purposes of the requirements in S15.1 through S15.7, production year means the 12-month period between May 1 of one year and April 30 of the following year, inclusive.

S15.1 *Vehicles manufactured on or after May 1, 2016 and before May 1, 2018.* At any time during or after the production years ending April 30, 2017 and April 30, 2018, each manufacturer shall, upon request from the Office of Vehicle Safety Compliance, provide information identifying the vehicles (by make, model and vehicle identification number) that have been certified as complying with S5.5.1 or S6.2.1 of this standard. The manufacturer's designation of a vehicle as a certified vehicle is irrevocable.

S15.2 *Vehicles manufactured on or after May 1, 2016 and before May 1, 2017.* Except as provided in S15.4, for passenger cars, multipurpose passenger vehicles, trucks, buses, and low-speed vehicles with a GVWR of 4,536 kg or less, manufactured by a manufacturer on or after May 1, 2016, and before May

1, 2017, the number of such vehicles complying with S5.5.1 or S6.2.1 shall be not less than 10 percent of the manufacturer's—

(a) Production of such vehicles during that period; or

(b) Average annual production of such vehicles manufactured in the three previous production years.

S15.3 *Vehicles manufactured on or after May 1, 2017 and before May 1, 2018.* Except as provided in S15.4, for passenger cars, multipurpose passenger vehicles, trucks, buses, and low-speed vehicles with a GVWR of 4,536 kg or less, manufactured by a manufacturer on or after May 1, 2017, and before May 1, 2018, the number of such vehicles complying with S5.5.1 or S6.2.1 shall be not less than 40 percent of the manufacturer's—

(a) Production of such vehicles during that period; or

(b) Average annual production of such vehicles manufactured in the three previous production years.

S15.4 *Exclusions from phase-in.* The following vehicles shall not be subject to the requirements in S15.1 through S15.3 but shall achieve full compliance with this standard at the end of the phase-in period in accordance with S5.5(b) and S6.2(b):

(a) Vehicles that are manufactured by small manufacturers or by limited line manufacturers.

(b) Vehicles that are altered (within the meaning of *49 CFR 567.7*) before May 1, 2017, after having been previously certified in accordance with part 567 of this chapter, and vehicles manufactured in two or more stages before May 1, 2018.

S15.5 *Vehicles produced by more than one manufacturer.* For the purpose of calculating average annual production of vehicles for each manufacturer and the number of vehicles manufactured by each manufacturer under S15.1 through S15.3, a vehicle produced by more than one manufacturer shall be attributed to a single manufacturer as follows, subject to S15.6—

(a) A vehicle that is imported shall be attributed to the importer.

(b) A vehicle manufactured in the United States by more than one manufacturer, one of which also markets the vehicle, shall be attributed to the manufacturer that markets the vehicle.

S15.6 A vehicle produced by more than one manufacturer shall be attributed to any one of the vehicle's manufacturers specified by an express written contract, reported to the National Highway Traffic Safety Administration under 49 CFR part 585, between the manufacturer so specified and the manufacturer to which the vehicle would otherwise be attributed under S15.5.

S15.7 *Calculation of complying vehicles.*

(a) For the purposes of calculating the vehicles complying with S15.2, a manufacturer may count a vehicle if it is manufactured on or after May 1, 2016 but before May 1, 2017.

(b) For purposes of complying with S15.3, a manufacturer may count a vehicle if it is manufactured on or after May 1, 2017 but before May 1, 2018 and,

(c) For the purposes of calculating average annual production of vehicles for each manufacturer and the number of vehicles manufactured by each manufacturer, each vehicle that is excluded from having to meet the applicable requirement is not counted.

■ 4. Section 571.500 is amended by adding S5(b)(11) to read as follows:

§ 571.500 Standard No. 500; Low-speed vehicles.

* * * * *

S5. * * *

(b) * * *

(11) Low-speed vehicles shall comply with the rear visibility requirements specified in paragraphs S6.2 of FMVSS No. 111.

PART 585—PHASE–IN REPORTING REQUIREMENTS

■ 5. The authority citation for part 585 is revised to read as follows:

Authority: 49 U.S.C. 322, 30111, 30115, 30117, and 30166; delegation of authority at 49 CFR 1.95.

■ 6. Add Subpart M to Part 585 to read as follows:

Subpart M—Rear Visibility Improvements Reporting Requirements

Sec.

585.121 Scope.
585.122 Purpose.
585.123 Applicability.
585.124 Definitions.
585.125 Response to inquiries.
585.126 Reporting requirements.
585.127 Records.

Subpart M—Rear Visibility Improvements Reporting Requirements

§ 585.121 Scope.

This part establishes requirements for manufacturers of passenger cars, of trucks, buses, multipurpose passenger vehicles and low-speed vehicles with a gross vehicle weight rating (GVWR) of 4,536 kilograms (kg) (10,000 pounds (lb)) or less, to submit a report, and maintain records related to the report, concerning the number of such vehicles that meet the rear visibility requirements in paragraphs S5.5 and S6.2 of Standard No. 111, Rear visibility (49 CFR 571.111).

§ 585.122 Purpose.

The purpose of these reporting requirements is to assist the National Highway Traffic Safety Administration in determining whether a manufacturer has complied with the rear visibility requirements in paragraphs S5.5 and S6.2 of Standard No. 111, Rear visibility (49 CFR 571.111).

§ 585.123 Applicability.

This part applies to manufacturers of passenger cars, of trucks, buses, multipurpose passenger vehicles and low-speed vehicles with a gross vehicle weight rating (GVWR) of 4,536 kilograms (kg) (10,000 pounds (lb)) or less.

§ 585.124 Definitions.

(a) All terms defined in 49 U.S.C. 30102 are used in their statutory meaning.

(b) Bus, gross vehicle weight rating or GVWR, low-speed vehicle, multipurpose passenger vehicle, passenger car, and truck are used as defined in § 571.3 of this chapter.

(c) Production year means the 12-month period between May 1 of one year and April 30 of the following year, inclusive.

§ 585.125 Response to inquiries.

At anytime during the production years ending April 30, 2017, and April 30, 2018, each manufacturer shall, upon request from the Office of Vehicle Safety Compliance, provide information identifying the vehicles (by make, model and vehicle identification number) that have been certified as complying with the rear visibility requirements in paragraphs S5.5 and S6.2 of Standard No. 111, Rear visibility (49 CFR 571.111). The manufacturer's designation of a vehicle as a certified vehicle is irrevocable.

§ 585.126 Reporting requirements.

(a) *Phase-in reporting requirements.* Within 60 days after the end of each of the production years ending April 30, 2017 and April 30, 2018, each manufacturer shall submit a report to the National Highway Traffic Safety Administration concerning its compliance with the rear visibility requirements in paragraphs S5.5 and S6.2 of Standard No. 111 (49 CFR 571.111) for its vehicles produced in that year. Each report shall provide the

information specified in paragraph (b) of this section and in § 585.2 of this part.

(b) *Phase-in report content*— (1) *Basis for phase-in production goals.* Each manufacturer shall provide the number of vehicles manufactured in the current production year, or, at the manufacturer's option, in each of the three previous production years. A new manufacturer that is, for the first time, manufacturing vehicles for sale in the United States must report the number of vehicles manufactured during the current production year.

(2) *Production of complying vehicles.* Each manufacturer shall report, for the production year being reported on, information on the number of vehicles that meet the rear visibility requirements in paragraphs S5.5 and S6.2 of Standard No. 111 (49 CFR 571.111).

§ 585.127 Records.

Each manufacturer shall maintain records of the Vehicle Identification Number for each vehicle for which information is reported under § 585.126 until April 30, 2022.

Issued in Washington DC, on March 31, 2014 under authority delegated in 49 CFR part 1.95.

David J. Friedman,

Acting Administrator.

[FR Doc. 2014–07469 Filed 4–1–14; 4:15 pm]

BILLING CODE 4910–59–P