AUTHENTICATED
U.S. GOVERNMENT
INFORMATION
GPO

FEDERAL REGISTER

Vol. 79 Tuesday,
No. 18 January 28, 2014

Part III

Department of Transportation

National Highway Traffic Safety Administration

49 CFR Part 571

Federal Motor Vehicle Safety Standards; Child Restraint Systems, Child Restraint Systems—Side Impact Protection, Incorporation by Reference; Proposed Rule

DEPARTMENT OF TRANSPORTATION

National Highway Traffic Safety Administration

49 CFR Part 571

[Docket No. NHTSA–2014–0012]

RIN 2127–AK95

Federal Motor Vehicle Safety Standards; Child Restraint Systems, Child Restraint Systems—Side Impact Protection, Incorporation by Reference

AGENCY: National Highway Traffic Safety Administration (NHTSA), Department of Transportation (DOT).

ACTION: Notice of proposed rulemaking (NPRM).

SUMMARY: This NPRM proposes to amend Federal Motor Vehicle Safety Standard (FMVSS) No. 213, ''Child restraint systems,'' to adopt side impact performance requirements for all child restraint systems designed to seat children in a weight range that includes weights up to 18 kilograms (kg) (40 pounds (lb)). NHTSA is issuing this NPRM to ensure that child restraints provide a minimum level of protection in side impacts by effectively restraining the child, preventing harmful head contact with an intruding vehicle door or child restraint structure, and by attenuating crash forces to the child's head and chest.

This NPRM is also issued toward fulfillment of a statutory mandate set forth in the ''Moving Ahead for Progress in the 21st Century Act'' (July 6, 2012), directing the Secretary of Transportation to issue a final rule amending FMVSS No. 213 to improve the protection of children seated in child restraint systems during side impacts.

DATES: Comments must be received on or before April 28, 2014.

Proposed compliance date: We propose that the compliance date for the amendments in this rulemaking action would be three years following the date of publication of the final rule in the **Federal Register**. Optional early compliance would be permitted.

ADDRESSES: You may submit comments to the docket number identified in the heading of this document by any of the following methods:

- *Federal eRulemaking Portal:* go to *http://www.regulations.gov*. Follow the online instructions for submitting comments.
- *Mail:* Docket Management Facility, M–30, U.S. Department of Transportation, West Building, Ground Floor, Rm. W12–140, 1200 New Jersey Avenue SE., Washington, DC 20590.
- *Hand Delivery or Courier:* West Building Ground Floor, Room W12–140, 1200 New Jersey Avenue SE., between 9 a.m. and 5 p.m. Eastern Time, Monday through Friday, except Federal holidays.
- *Fax:* (202) 493–2251.

Regardless of how you submit your comments, please mention the docket number of this document.

You may also call the Docket at 202–366–9324.

Instructions: For detailed instructions on submitting comments and additional information on the rulemaking process, see the Public Participation heading of the Supplementary Information section of this document. Note that all comments received will be posted without change to *http://www.regulations.gov,* including any personal information provided.

Privacy Act: Please see the Privacy Act heading under Rulemaking Analyses and Notices.

FOR FURTHER INFORMATION CONTACT: For technical issues, you may call Cristina Echemendia, Office of Crashworthiness Standards, (Telephone: 202–366–6345) (Fax: 202–493–2990). For legal issues, you may call Deirdre Fujita, Office of Chief Counsel (Telephone: 202–366–2992) (Fax: 202–366–3820). Mailing address: National Highway Traffic Safety Administration, U.S. Department of Transportation, 1200 New Jersey Avenue SE., West Building, Washington, DC 20590.

SUPPLEMENTARY INFORMATION:

Table of Contents

I. Executive Summary
II. Statutory Mandate
III. The Existing Standard
IV. Summary of Proposed Amendments
V. Guiding Principles
VI. Potentially Affected Child Restraints
VII. Real World Analysis
VIII. Past NHTSA Efforts
IX. Side Impact Program Developments
a. Side Impact Environment for Children
b. Injury Mechanisms in Side Impact
c. Global Dynamic Side Impact Tests
d. Side Impact Test Dummy
X. Developing NHTSA's Side Impact Test
a. Assessment of Existing Global Efforts
b. Takata Test Procedure
XI. The Proposed Test Procedure
a. Sled Kinematic Parameters
1. Sliding Seat Acceleration Profile (Representing the Struck Vehicle)
2. Door Velocity
3. Sled Buck Angle (Replicating Longitudinal Component of the Direction of Force)
b. Rear Seat Environment Parameters
1. Rear Seat Cushion Stiffness
2. Rear Seat Door Stiffness
3. Rear Seat Environment Geometry
c. Dynamic Validation of the Sled Test
XII. Proposed Dynamic Performance
a. Q3s Dummy
b. CRABI Dummy
c. Energy Absorption and Distribution
XIII. Fleet Testing
a. Q3s Dummy
b. CRABI Dummy
XIV. Countermeasure Assessment
XV. Petition Regarding Deceleration Sled System
XVI. Costs and Benefits
XVII. Effective Date
XVIII. Regulatory Notices and Analyses
XIX. Public Participation

This NPRM proposes to amend FMVSS No. 213, ''Child restraint systems,'' to adopt side impact performance requirements for all child restraint systems designed to seat children in a weight range that includes weights up to 18 kg (40 lb). Frontal and side crashes account for most child occupant fatalities. Standard No. 213 currently requires child restraints to meet a dynamic test simulating a 48.3 kilometers per hour (30 miles per hour) frontal impact. Today's proposal would require an additional test in which such child restraints must protect the child occupant in a dynamic test simulating a full-scale vehicle-to-vehicle side impact.

Child restraints would be tested with a newly-developed instrumented side impact test dummy representing a 3-year-old child, called the Q3s dummy, and with a well-established 12-month-old child test dummy (the Child Restraint Air Bag Interaction (CRABI) dummy). NHTSA is issuing this NPRM to ensure that child restraints provide a minimum level of protection in side impacts by effectively restraining the child, preventing harmful head contact with an intruding vehicle door or child restraint structure, and by attenuating crash forces to the child's head and chest.

This NPRM is also issued toward fulfillment of a statutory mandate set forth in the ''Moving Ahead for Progress in the 21st Century Act'' (July 6, 2012), directing the Secretary of Transportation to issue a final rule amending FMVSS No. 213 to improve the protection of children seated in child restraint systems during side impacts.

I. Executive Summary

Impacts to the side of a vehicle rank almost equal to frontal crashes as a source of occupant fatalities and serious injuries to children ages 0 to 12. Side impacts are especially dangerous when the impact is on the passenger compartment because, unlike a frontal or rear-end crash, there are no substantial, crushable metal structures between the occupant and the impacting vehicle or object. The door collapses into the passenger compartment and the occupants contact the door relatively

quickly after the crash at a high relative velocity.[1]

In a vehicle-to-vehicle side impact crash, the striking vehicle first interacts with the door structure of the struck vehicle and commences crushing the door and intruding laterally into the vehicle compartment. Second, the striking vehicle engages the sill of the struck vehicle and begins to push the struck vehicle away. At this time, the occupant sitting in the vehicle experiences the struck vehicle seat moving away from the impacting vehicle while the door intrudes towards him or her. Next, the occupant interacts with the intruding door, after which the occupant is accelerated away from the door until the occupant reaches the velocity of the struck and striking vehicle.

Passenger vehicles provide protection in vehicle-to-vehicle crashes by meeting FMVSS No. 214, ''Side impact protection.'' FMVSS No. 214 requires passenger vehicles to provide side impact protection in several different side crashes. In a full-scale crash test representing a severe intersection collision between two passenger vehicles, FMVSS No. 214 requires passenger vehicles to protect occupants when the vehicle is struck on either side by a moving deformable barrier (MDB) simulating an impacting vehicle.[2] The FMVSS No. 214 MDB crash test involves an MDB weighing 1,360 kg (3,000 lb), to represent a vehicle which is traveling at 48.3 kilometers per hour (km/h) (30 miles per hour (mph)) striking the side of another vehicle which is traveling at 24 km/h (15 mph).[3] The struck vehicle must limit the potential for injuries to an occupant's head, thorax, and pelvis, as measured by test dummies seated in the front outboard seat and rear outboard seat on the struck side of the vehicle (''near side'' positions).

Today's NPRM proposes a side impact test that simulates the two-vehicle side crash replicated by the FMVSS No. 214 MDB test of a small passenger car. Today's proposal would require all child restraint systems (CRSs) designed to seat children in a weight range that includes weights up to18 kg (40 lb) to meet specific performance criteria in a dynamic sled test that simulates the MDB test (striking vehicle traveling at 48.3 km/h (30 mph) impacting the struck vehicle traveling at 24 km/h (15 mph)). Approximately 92 percent of side crashes involving restrained children are of equivalent or lower crash severity than the FMVSS No. 214 MDB crash test of a small passenger car.[4]

The proposed sled test is the first of its kind in the world for testing child restraints in a sled system that simulates the vehicle acceleration and intruding door of a small passenger car in a side impact (a vehicle-to-vehicle intersection crash). We do not have sufficient data to determine what share of covered crashes involve an intruding door, however door intrusion is a causative factor for moderate and serious injury to children in side impacts. Child restraints would be tested in the side impact sled test with the Q3s instrumented side impact test dummy representing the size and weight of a 3-year-old (3 YO) child, and with the CRABI dummy representing a 12-month-old (12 MO) infant. NHTSA has previously published an NPRM proposing to amend our regulation for anthropomorphic test devices, 49 CFR Part 572, to add specifications for the Q3s (78 FR 69944; November 21, 2013). The CRABI dummy's specifications are incorporated into 49 CFR Part 572, Subpart R.

NHTSA is issuing this NPRM to ensure that subject child restraints provide a minimum level of protection in side impacts. The CRSs would have to effectively restrain the child, prevent harmful head contact with an intruding vehicle door or child restraint structure, and attenuate crash forces to the child's chest. Injury criteria (expressed in terms of a head injury criterion (HIC) and chest deflection) are proposed for the Q3s. These criteria allow a quantitative evaluation of the effectiveness of the CRS to prevent or attenuate head and chest impact with the intruding door. The 12 MO CRABI would be used to measure the containment capability of the CRS (the ability to prevent the dummy's head from making contact with the intruding door of the sled assembly). In addition, CRSs would be required to meet other structural integrity requirements in the sled test that ensure a sound level of performance in side impacts.

We estimate that a final rule resulting from this proposal would reduce 5.2 fatalities and 64 non-fatal injuries (MAIS[5] 1–5) annually (see Table 1 below).[6] The equivalent lives and the monetized benefits were estimated in accordance with guidance issued February 28, 2013 by the Office of the Secretary[7] regarding the treatment of value of a statistical life in regulatory analyses. A final rule resulting from this proposal is estimated to save 18.26 equivalent lives annually. The monetized annual benefits of the proposed rule at 3 and 7 percent discount rates are $182.6 million and $165.7 million, respectively (Table 2). We estimate that the annual cost of this proposed rule would be approximately $3.7 million. The countermeasures may include larger wings and padding with energy absorption characteristics that cost, on average, approximately $0.50 per CRS designed for children in a weight range that includes weights up to 40 lb (both forward-facing and rear-facing) (Table 3 below). The annual net benefits are estimated to be $162.0 million (7 percent discount rate) to $178.9 million (3 percent discount rate) as shown in Table 4. Because the proposed rule is cost beneficial just by comparing costs to monetized economic benefits, and there is a net benefit, we are not providing a net cost per equivalent life saved since no value would be provided by such an estimate.

[1] Kahane, November 1982, NHTSA Report No. DOT HS 806 314.

[2] FMVSS No. 214 also specifies a static laboratory test that has greatly improved side door strength and protection against side impacts with fixed objects. The static test has resulted in manufacturers reinforcing side doors with a horizontal beam. In addition, FMVSS No. 214 specifies a full-scale side crash test of a vehicle into a pole, which has resulted in the installation of side air bags to protect against head and chest injuries.

[3] In the FMVSS No. 214 test, only the striking ''vehicle,'' represented by the MDB, is moving. Using vector analysis, the agency combined the impact speed and impact angle data in crash files to determine that the dynamics and forces of a crash in which a vehicle traveling at 48.3 km/h (30 mph) perpendicularly strikes the side of a vehicle traveling at 24 km/h (15 mph) could be represented by a test configuration in which: The test vehicle is stationary; the longitudinal centerline of the MDB is perpendicular to the longitudinal centerline of the test vehicle; the front and rear wheels of the MDB are crabbed at an angle of 27 degrees to the right of its longitudinal centerline in a left side impact and to the left of that centerline in a right side impact; and the MDB moves at that angle and at a speed of 54 km/h (33.5 mph) into the side of the struck vehicle.

[4] Obtained from an analysis of the National Automotive Sampling System—Crashworthiness Data System (NASS–CDS) data files for the years 1995–2009 for restrained children 0 to 12 YO in all restraint environments including seat belts and CRS. Details of the analysis are provided in the technical report in the docket for this NPRM.

[5] MAIS (Maximum Abbreviated Injury Scale) represents the maximum injury severity of an occupant based on the Abbreviated Injury Scale (AIS). AIS ranks individual injuries by body region on a scale of 1 to 6: 1 = minor, 2 = moderate, 3 = serious, 4 = severe, 5 = critical, and 6 = maximum (untreatable). MAIS 3+ injuries represent MAIS injuries at an AIS level of 3, 4, 5, or 6.

[6] NHTSA has developed a Preliminary Regulatory Impact Analysis (PRIA) that discusses issues relating to the potential costs, benefits, and other impacts of this regulatory action. The PRIA is available in the docket for this NPRM and may be obtained by downloading it or by contacting Docket Management at the address or telephone number provided at the beginning of this document.

[7] *http://www.dot.gov/sites/dot.dev/files/docs/VSL%20Guidance%202013.pdf.*

TABLE 1—ESTIMATED BENEFITS

Fatalities	5.2
Non-fatal injuries (MAIS 1 to 5)	64

TABLE 2 ESTIMATED MONETIZED BENEFITS

[In millions of 2010 dollars]

	Economic benefits	Value of statistical life	Total benefits
3 Percent Discount Rate	$16.0	$166.6	$182.6
7 Percent Discount Rate	14.4	151.3	165.7

TABLE 3—ESTIMATED COSTS (2010 ECONOMICS)

Average cost per CRS designed for children in a weight range that includes weights up to 40 lb.	$0.50
Total annual cost	3.7 million

TABLE 4—ANNUALIZED COSTS AND BENEFITS

[In millions of 2010 dollars]

	Annualized costs	Annualized benefits	Net benefits
3% Discount Rate	$3.7	$182.6	$178.9
7% Discount Rate	3.7	165.7	162.0

Accident data indicate that CRSs designed for children in a weight range that includes weights up to 18 kg (40 lb) are generally already remarkably effective in reducing the risk of death and serious injury in side impacts. We have observed in recent years that increasing numbers of these CRSs appear to have more side structure coverage (CRS side ''wings'') and side padding than before.[8] Because the design of the side wings and stiffness of the padding are factors that affect the containment of the child dummy and the injury measures, we consider the side wing coverage and increased padding to be overall positive developments. Yet, because FMVSS No. 213 currently does not have a side impact test, a quantifiable assessment of the protective qualities of the features was heretofore not possible. Today's NPRM would establish performance requirements that ensure that the wings, padding, padding-like features, or other countermeasures employed in recent years reportedly to provide protection in side impacts will in fact achieve a minimum level of performance that will reduce the risk of injury or fatality in side impacts. For CRS designs that have not yet incorporated side impact protection features, today's NPRM is the first step toward ensuring that they will.

II. Statutory Mandate

On July 6, 2012, President Obama signed the ''Moving Ahead for Progress in the 21st Century Act'' (MAP–21), P.L. 112–141. Subtitle E of MAP–21, entitled ''Child Safety Standards,'' includes section 31501(a) which states that, not later than 2 years after the date of enactment of the Act, the Secretary shall issue a final rule amending Federal Motor Vehicle Safety Standard Number 213 to improve the protection of children seated in child restraint systems during side impact crashes.[9]

We interpret this provision of MAP–21 as providing us a fair amount of discretion. NHTSA informed Congress in 2004 that enhanced side impact protection for children in child restraints was a priority for NHTSA.[10] The agency informed Congress that it will continue efforts to obtain detailed side crash data to identify specific injury mechanisms involving children and will work on countermeasure development using test dummies, including the European Q3 dummy then available, for improved side impact protection. Our current NHTSA Vehicle Safety and Fuel Economy Rulemaking and Research Priority Plan 2011–2013, March 2011,[11] announced our intention to issue an NPRM in 2012 on child restraint side impact protection. The plan shows that we were planning to ''[p]ropose test procedures in FMVSS No. 213 to assess child restraint performance in near-side impacts. Amend Part 572 to add the Q3s dummy, the 3-year-old side impact version of the Q-series of child dummies.''

We believe that MAP–21's short deadline for issuance of a final rule indicates that Congress intended for NHTSA to use the existing state of knowledge gained from our research efforts to initiate and complete the regulation as the agency had planned. There are no child test dummies other than the Q3s available at this time that have been proven sufficiently durable

[8] SafetyBeltSafe U.S.A. *http://www.carseat.org/Pictorial/InfantPict,1-11.pdf* and *http://www.carseat.org/Pictorial/3-Five-%20Point-np.pdf*. Last accessed January 24, 2013.

[9] Subtitle E also includes provisions for commencing a rulemaking to amend the standard seat assembly specifications in FMVSS No. 213 to better simulate a single representative motor vehicle rear seat (section 31501(b)), and initiating a rulemaking to amend FMVSS No. 225, ''Child restraint anchorage systems,'' to improve the ease of use of lower anchorages and tethers (section 31502(a)). The agency anticipates dealing with these provisions in future rulemakings.

[10] NHTSA Report to Congress, ''Child Restraint Systems, Transportation Recall Enhancement, Accountability, and Documentation Act,'' February 2004. *www.nhtsa.gov/nhtsa/announce/NHTSAReports/TREAD.pdf*.

[11] Docket No. NHTSA–2009–0108–0032.

and reliable for use in the proposed FMVSS No. 213 side impact testing. The level and amount of effort needed to further develop and validate a different test procedure, or new child side impact test dummies, far exceeds what could be accomplished within the time constraints of the Act.

Further, MAP–21 requires a final rule amending FMVSS No. 213, which means that the rulemaking must be conducted in accordance with the National Traffic and Motor Vehicle Safety Act (49 U.S.C. 30101 *et seq.*) (''Vehicle Safety Act''). Under the Vehicle Safety Act, the Secretary of Transportation is authorized to prescribe Federal motor vehicle safety standards that are practicable, meet the need for motor vehicle safety, and are stated in objective terms.[12] ''Motor vehicle safety'' is defined in the Vehicle Safety Act as ''the performance of a motor vehicle or motor vehicle equipment in a way that protects the public against unreasonable risk of accidents occurring because of the design, construction, or performance of a motor vehicle, and against unreasonable risk of death or injury in an accident, and includes nonoperational safety of a motor vehicle.'' [13] When prescribing such standards, the Secretary must consider all relevant, available motor vehicle safety information, and consider whether a standard is reasonable, practicable, and appropriate for the types of motor vehicles or motor vehicle equipment for which it is prescribed.[14] The Secretary must also consider the extent to which the standard will further the statutory purpose of reducing traffic accidents and associated deaths.[15]

We have developed a regulation that will improve the protection of children seated in child restraint systems during side impacts, in accordance with MAP–21, while meeting the criteria of section 30111 of the Vehicle Safety Act. We believe that the proposed regulation meets the need for safety, is stated in objective terms, and is reasonable, practicable, and appropriate. While the language of section 31501(a) of MAP–21 is broad enough to encompass a large universe of child restraint systems, there are technical and practical reasons for applying the dynamic side impact test only to CRSs designed to seat children in a weight range that includes weights up to 18 kg (40 lb). For one, there is no side impact dummy representative of children larger than those represented by the Q3s that can reasonably be used to test CRSs for children above 18 kg (40 lb) to the dynamic side impact requirements proposed today. Without an appropriate test dummy, the data from a dynamic test would not provide a meaningful assessment of the performance of the CRS in protecting children of weights above 18 kg (40 lb). In addition, the seated height of children weighing more than 18 kg (40 lb) who are restrained in child restraints is typically sufficient to take advantage of the vehicle's side impact protection systems, such as side curtain air bags. Thus, the safety need for Standard No. 213's dynamic side impact requirements is attenuated for these CRSs. These reasons are further discussed in a section below, and are presented for public comment.

III. The Existing Standard

CRSs are highly effective in reducing the likelihood of death or serious injury in motor vehicle crashes. NHTSA estimates that for children less than 1 year old, a child restraint can reduce the risk of fatality by 71 percent when used in a passenger car and by 58 percent when used in a pickup truck, van, or sport utility vehicle (light truck).[16] Child restraint effectiveness for children between the ages 1 to 4 YO is 54 percent in passenger cars and 59 percent in light trucks. *Id.*

The most significant dynamic performance requirements of FMVSS No. 213 relevant to this NPRM are briefly described below.[17]

l. The crash performance of a CRS is evaluated in a frontal dynamic test involving a 48.3 km/h (30 mph) velocity change, which is representative of a severe crash. CRSs are tested while attached to a standardized seat assembly representative of a passenger vehicle seat. CRSs other than booster seats must meet minimum performance requirements when anchored to the standard seat assembly with a lap belt only, or with the lower anchorages of the ''LATCH'' [18] system. The CRSs must meet more stringent head excursion requirements in another test, one in which a top tether, if provided, is permitted to be attached. Belt-positioning (booster) seats are tested on the standard seat assembly using a lap and shoulder belt.[19]

2. CRSs are dynamically tested with anthropomorphic test devices (ATDs) (child test dummies) representative of the children for whom the CRS is recommended. FMVSS No. 213 specifies the use of ATDs representing a newborn, a 12 MO infant, a 3 YO, a 6 YO, a weighted 6 YO, and a 10 YO.[20] Except for the newborn and weighted 6 YO ATDs, the test dummies are equipped with instrumentation measuring crash forces imposed on the ATD. The mass, size, and kinematics of the ATDs are designed to replicate those of a human child.

3. To protect the child, FMVSS No. 213 requires CRSs to limit the amount of force that can be exerted on the head and chest of the ATD during the dynamic test. FMVSS No. 213 also requires CRSs to meet head excursion limits to reduce the possibility of head injury from contact with vehicle interior surfaces and ejection, and limits knee excursion.

4. FMVSS No. 213 requires CRSs to maintain system integrity (i.e., not fracture or separate in such a way as to harm a child). The standard also specifies requirements for the size and shape of contactable surfaces of the CRS to ensure that surfaces that can harm on impact are absent, and specifies requirements for the performance of belts and buckles to make sure that, among other things, a buckle can be swiftly unlatched after a crash by an adult for expeditious egress from the crash site but cannot be easily unbuckled by an unsupervised child.

[12] 49 U.S.C. 30111(a).

[13] 49 U.S.C. 30102(a)(8).

[14] 49 U.S.C. 30111(b).

[15] *Id.*

[16] ''Revised Estimates of Child Restraint Effectiveness,'' Research Note, National Center for Statistics and Analysis (NCSA) of the National Highway Traffic Safety Administration (NHTSA), DOT HS 96855, December 1996, *http://www-nrd.nhtsa.dot.gov/Pubs/96855.pdf,* last accessed on May 2, 2012.

[17] FMVSS No. 213 also has labeling and owner's manual requirements for proper use of the CRS, including requirements that safety warnings be prominently displayed on the CRS. The standard also includes requirements for the flammability resistance of the CRS. The standard also establishes an owner-registration program so that purchasers can register with the manufacturer and be directly notified in the event of a safety recall.

[18] LATCH refers to *L*ower *A*nchors and *T*ethers for *Ch*ildren, an acronym developed by manufacturers and retailers to refer to the child restraint anchorage system required by FMVSS No. 225 for installation in motor vehicles. LATCH consists of two lower anchorages, and one upper tether anchorage. Each lower anchorage includes a rigid round rod or ''bar'' onto which a hook, a jaw-like buckle or other connector can be snapped. The bars are located at the intersection of the vehicle seat cushion and seat back. The upper tether anchorage is a ring-like object to which the upper tether of a child restraint system can be attached. FMVSS No. 213 requires CRSs to be equipped with attachments that enable the CRS to attach to the vehicle's LATCH system.

[19] Built-in CRSs are evaluated by crash testing the vehicle into which the CRSs are built, or by simulating a crash with the built-in seat dynamically tested with parts of the vehicle surrounding it.

[20] NHTSA will use the 10 YO child dummy in compliance testing to test CRSs manufactured on or after February 27, 2014.

IV. Summary of Proposed Amendments

This NPRM proposes to amend FMVSS No. 213 to adopt side impact performance requirements for CRSs designed to seat children in a weight range that includes weights up to 18 kg (40 lb). The side impact test requirements would be specified in a new standard, FMVSS No. ''213a.'' FMVSS No. 213 would be amended to include a requirement that the CRSs covered by this NPRM must meet the new FMVSS No. 213a in addition to the requirements established in FMVSS No. 213.[21]

The most significant amendments proposed by this NPRM are described below.

1. A dynamic (sled) test would be used to evaluate the performance of the CRS in a side impact. The sled test was developed based on an acceleration sled system[22] developed by Takata. The test procedure simulates the two-vehicle side crash replicated in the MDB test of FMVSS No. 214 (striking vehicle traveling at 48.3 km/h (30 mph)) impacting the struck vehicle traveling at 24 km/h (15 mph). The proposed sled test simulates a near-side side impact of a small passenger car. It simulates the velocity of the striking vehicle, the struck vehicle, and an intruding door.

2. The test buck consists of a sliding ''vehicle'' seat (representative of a rear seat designated seating position) mounted to a rail system along with a ''side door'' structure rigidly mounted to the sled buck structure. The sliding ''vehicle'' seat and side door are representative of today's passenger vehicles. This ''side impact seat assembly'' (SISA) proposed for the side impact test is specified by drawings that have been placed in the docket for today's NPRM. The sliding vehicle seat is positioned sufficiently away from the side door to allow the sled to reach a desired velocity (31.3 km/h) prior to the time the sliding ''vehicle'' seat starts to accelerate to a specific acceleration profile.

3. Most CRSs would be attached using LATCH to the sliding ''vehicle'' seat of the SISA. CRSs covered by this NPRM that are not currently required by FMVSS No. 213 to have LATCH attachments (i.e., belt-positioning seats) would be tested using a lap and shoulder belt on the SISA. The center of the CRS is positioned 300 mm from the edge of the sliding seat next to the intruding door (simulating a near-side position). At the time the sliding seat starts to accelerate, the armrest on the door is located 32 mm from the edge of the seat towards the child restraint system. For forward-facing CRSs with LATCH attachments, the LATCH lower anchorages and the top tether, if provided, would be used (assuming the top tether is recommended for use in motor vehicles by the CRS manufacturer).

4. CRSs recommended for children with weights that include 10 kg to 18 kg (22 lb to 40 lb) would be tested on the SISA with an ATD representing a 3 YO child, referred to as the ''Q3s.'' The Q3s is a side impact version of the 3 YO child Q-series dummy (Q3), a frontal crash dummy developed in Europe. CRSs recommended to seat children with weights up to 10 kg (22 lb) would be tested with the 12 MO CRABI dummy (49 CFR Part 572, Subpart R).

5. Injury criteria (expressed in terms of HIC_{15}[23] and chest deflection) are proposed for the Q3s. These criteria allow a quantitative evaluation of the effectiveness of the CRS, and the ability of the CRS to prevent or attenuate head and chest impact with the intruding door. The CRABI would be used to measure the containment capability (the ability to prevent the ATD's head from contacting the intruding door of the SISA) of CRSs recommended for children weighing more than 5 kg (11 lb) and up to 10 kg (22 lb). In addition, CRSs would be required to meet structural integrity and other requirements described in item 4 of the previous section.

V. Guiding Principles

The following principles guided our decision-making in developing this NPRM. Several of these principles have guided our past rulemakings on FMVSS No. 213.

a. NHTSA estimates that CRSs are already 42 percent effective in preventing death in side crashes of 0 to 3 YO children.[24] This estimated degree of effectiveness is high, and is only 11 percentage points lower than CRS effectiveness in frontal crashes (53 percent), notwithstanding that FMVSS No. 213 requires CRSs to meet specific performance requirements in a frontal impact sled test but has no such dynamic performance requirements in side impact. We believe that the effectiveness of CRSs in side impact can be attributed to the CRS harness containing the child in the seating position, thereby mitigating harmful contact with interior vehicle components, and to the CRS structure shielding the child from direct impact and absorbing some of the crash forces.

b. In making regulatory decisions on possible enhancements to CRS performance, the agency must bear in mind the consumer acceptance of cost increases to an already highly-effective item of safety equipment. Any enhancement that would significantly raise the price of the restraints could potentially have an adverse effect on the sales of this voluntarily-purchased equipment. The net effect on safety could be negative if the effect of sales losses exceeds the benefit of the improved performance of the restraints that are purchased. Thus, to maximize the total safety benefits of its efforts on FMVSS No. 213, the agency must balance those improvements against impacts on the price of restraints. In addition, NHTSA must also consider the effects of improved performance on the ease of using child restraints. If the use of child restraints becomes overly complex or unwieldy, the twin problems of misuse and nonuse of child restraints could be exacerbated.

c. Estimating the net effect on safety of this rulemaking, consistent with the principles for regulatory decision-making set forth in Executive Order (E.O.) 12286, ''Regulatory Planning and Review,'' and E.O. 13563, ''Improving Regulation and Regulatory Review,'' was limited by several factors. One was that data are sparse on side crashes resulting in severe injuries or fatalities to children in CRSs. Data indicate that side crashes resulting in fatalities to children in CRSs mainly occur in very severe, un-survivable side impact conditions. A dynamic test involving a very high test speed or intrusion level may have undesirable impacts on FMVSS No. 213 regarding practicability, cost, and possible detrimental effects on safety (i.e., the possible effects on the use of CRSs, discussed above).

[21] A final rule could incorporate the proposed requirements into FMVSS No. 213, rather than in a separate FMVSS No. 213a. This NPRM shows the proposed requirements separately in FMVSS No. 213a for plain language purposes and the reader's convenience.

[22] An acceleration sled is accelerated from rest to a prescribed acceleration profile to simulate the occupant compartment deceleration in a crash event. In comparison, a ''deceleration sled'' is first accelerated to a target velocity and then is decelerated to a prescribed deceleration profile to simulate the same event.

[23] Head injury criterion that is based on the integration of resultant head acceleration over a 15 millisecond duration.

[24] NHTSA conducted an analysis of the Fatality Analysis Reporting System (FARS) data files of real world fatal non-rollover frontal and side crashes of passenger cars and light trucks and vans involving children for the years 1995 to 2009. From this analysis, the agency estimated the effectiveness of CRSs in preventing fatalities among 0 to 3 YO children to be 42 percent in side crashes and 52 percent in frontal crashes. The analysis method is similar to that reported in the NCSA Research Note, ''Revised Estimates of Child Restraint Effectiveness,'' DOT HS 96855 and is also detailed in the technical report in the docket.

Another limiting factor was there is no information comparing the real world performance of ''good'' performing CRSs versus ''poor'' performing CRSs. Without these data, we had to use test data and injury curves to determine the effectiveness of possible countermeasures (e.g., large side wings with energy absorbing padding). We are also limited by the unavailability of child ATDs for side impact testing. Currently, there is only an ATD representing a 3 YO child that has been specially developed for side impacts. The 12 MO CRABI dummy is a frontal impact dummy, and can only be used in a limited capacity to estimate benefits in this side impact rulemaking.

d. In developing this NPRM, we sought to build on the levels of side impact protection provided by FMVSS No. 214. The sled test proposed today is based on the FMVSS No. 214 MDB test of a small passenger car, replicating the real-world side crashes that occur most frequently today. The proposed sled test set-up is representative of the side impact environment in which a CRS would be used in today's vehicles. The environment is based on the rear seat and side door of vehicles meeting FMVSS No. 214. Children seated in the rear seat are benefitting from FMVSS No. 214's requirements: Side door beams and door and sill structure reinforcements prevent intrusion and enable the vehicle to better manage the crash energy.[25]

Yet, due to their size and fragility, infants and toddlers are dependent on child restraint systems to augment FMVSS No. 214 protection, and to manage the side crash energy further. In developing this NPRM, our objectives were to ensure that CRSs provide a minimum level of protection in side impacts by effectively restraining the child, preventing harmful head contact with an intruding vehicle door or CRS structure, and by attenuating crashes forces to the child's chest.

e. This rulemaking is issued in furtherance of MAP–21. MAP–21 requires a final rule amending FMVSS No. 213 to improve the protection of children seated in child restraint systems during side impact crashes.

VI. Potentially Affected Child Restraints

Consistent with the principles discussed above, we propose to apply the side impact test requirements to all CRSs designed to seat children in a weight range that includes weights up to 18 kg (40 lb). Children in the 0 to 18 kg (40 lb) group (which encompasses children from birth to about 4 YO) have a high rate of child restraint use (<1 YO = 98 percent and 1 to 3 YO[26] = 93 percent according to the 2009 National Survey of the Use of Booster Seats (NSUBS)[27]), which provides a good opportunity for improving CRS performance and reducing injuries and fatalities through a side impact regulation.[28]

We believe that focusing at this time on the 0 to 18 kg (40 lb) (0 to 4 YO) age group is highly appropriate for several reasons. Real-world data show that head injuries are the most common injuries in a side impact environment. According to McCray,[29] head injuries in children 1 to 3 YO are slightly higher than for overall children 0 to12 years of age. Possible countermeasures available to CRS manufacturers to reduce the risk of head injury are the addition of padding or larger side ''wing'' structures to keep the child's head contained and to reduce the severity of the impact. It appears from our testing that energy-absorbing padding added to the CRS around the head area of the child and to the side structures (CRS side ''wings'') would enable forward- and rear-facing CRSs to meet the proposed requirements without adding any additional structures to the seats.

Focusing on children weighing up to 18 kg (40 lb) (0 to 4 YO age group) also appropriately reflects the near-side impact environment in which CRSs will be used. Our test results indicated that an important factor in the near side impact environment is the position of the child's head with respect to the ''beltline'' (also referred to as the window sill)[30] of the vehicle door. The sitting height of older children restrained in CRSs typically positions the head high enough above the beltline to benefit from the vehicle's FMVSS No. 214 side impact safety features, such as side window curtain air bags. The need for a side impact requirement in FMVSS No. 213 may be lessened for those children. However, when the child's head is below the beltline, as likely with children weighing up to 18 kg (40 lb) (0 to 4 YO) in CRSs, there is greater need for FMVSS No. 213 side impact protection, as less benefit is attained from the vehicle countermeasures.

Importantly also, due to the absence of an array of side impact child test dummies, we believe that focusing this NPRM on CRSs designed for children in a weight range that includes weights up to 18 kg (40 lb) best accords with Vehicle Safety Act requirements, which, among other factors, require each FMVSS to be ''appropriate for the types of motor vehicle equipment for which it is prescribed.''[31] In FMVSS No. 213's frontal crash program, a 3 YO child dummy (weighing 16.3 kg (36 lb)) is considered representative of children weighing 10 kg to 18 kg (22 to 40 lb), and is used to test CRSs recommended for children weighing 10 kg to 18 kg (22 to 40 lb). Similarly, we believe that the Q3s 3 YO side impact test dummy (weighing 14.5 kg (32 lb)) would be an appropriate test dummy to evaluate CRSs designed for children weighing 10 kg to 18 kg (22 lb to 40 lb).

On the other hand, currently, the 3 YO child dummy used in the frontal crash program is not used to test CRSs with regard to performance in restraining children weighing more than 18 kg (40 lb). This is because the 3 YO test dummy is not considered representative of children for whom the CRS is recommended. Similarly, we believe that the Q3s, which has only been made available recently, would not be a suitable dummy to test the performance of CRSs with respect to children weighing more than 18 kg (40 lb). The Q3s would not be representative of children for whom the CRS is recommended, and test data obtained by use of the ATD would not likely be meaningful as to the performance of the CRS in restraining

[25] Side curtain air bags installed pursuant to FMVSS No. 214's pole test will provide head protection to children who sit high enough (whether in a CRS or directly on the vehicle seat) to experience head-to-curtain interaction in a side crash.

[26] Note that in survey data a child who is 1 day shy of his or her 4th birth day is still considered a 3 YO. Therefore survey data representing 1 to 3 YO children include 3 YO children who are nearly 4 YO and at the 40 lb weight limit representing the weight of a 75th percentile 4 YO child or an average 5 YO child.

[27] Pikrell, T.M., Ye, T. Report Number DOT HS 811 377. September 2010. NSUBS is a probability-based nationwide child restraint use survey conducted by NHTSA's National Center for Statistics and Analysis (NCSA).

[28] Children between 4 and 12 YO have lower child restraint use (4 to 7 YO = 55 percent and 8 to 12 YO = 6 percent). Data show that 43 percent of 4 to 7 YO and 78 percent of 8 to 12 YO children use seat belts.

[29] McCray, L., Scarboro, M., Brewer, J. ''Injuries to children one to three years old in side impact crashes,'' 20th International Conference on the Enhanced Safety of Vehicles, 2007. Paper Number 07–0186.

[30] The beltline of a vehicle is a term used in vehicle design and styling, referring to the nominally horizontal line below the side glazing of a vehicle, which separates the glazing area from the lower body. Passenger vehicles are required to provide head protection in side impacts and ejection mitigation in rollovers, pursuant to FMVSS No. 214 and FMVSS No. 226, ''Ejection mitigation,'' respectively. The countermeasure provided to meet FMVSS No. 226, usually a side curtain air bag, must meet performance requirements that, in effect, will necessitate coverage of the side windows to the beltline of the vehicle.

[31] 49 U.S.C. 30111(b).

children weighing more than 18 kg (40 lb).

We request comments on the merits of amending FMVSS No. 213 at this time to improve the protection of children weighing over 18 kg (40 lb), assessing performance of the CRSs with the Q3s or by other means. We also seek comments on whether belt-positioning (booster) seats recommended for older children have design limitations that might impede their ability to meet the proposed requirements. We have noticed that some belt-positioning seats for older children are advertised as providing side impact protection. We ask manufacturers to provide us information on the methods they use to demonstrate that their side impact design features for belt-positioning seats do in fact improve protection in side impacts.

There are a number of different types of child restraints designed for children in a weight range that includes weights up to 18 kg (40 lb). With regard to belt-positioning (booster) seats recommended for children weighing up to 18 kg (40 lb),[32] we propose testing the seats with the Q3s.[33] The SISA would be equipped with Type II (lap and shoulder) belts to test the belt-positioning boosters. Belt-positioning (booster) seats sold for children in a weight range that includes weights up to 18 kg (40 lb) might have to improve some side wing structures, but we tentatively believe that the trade-off in possible increased size of side wing structures and padding and cost of these belt-positioning seats versus improved side impact protection is worthwhile for protection of this young child group (children weighing up to 18 kg (40 lb) (0 to 4 YO age group)). This approach of testing all CRSs designed to seat children in a weight range that includes weights up to 18 kg (40 lb), including belt-positioning seats, accords with MAP–21.

On the other hand, we believe that the proposed requirements should not apply to harnesses. FMVSS No. 213 defines a harness as ''a combination pelvic and upper torso child restraint system that consists primarily of flexible material, such as straps, webbing or similar material, and that does not include a rigid seating structure of the child.'' NHTSA tentatively believes that harnesses should be excluded because of practicability concerns about the ability of the harness to meet the proposed requirements and because harnesses serve a need in certain populations. Harnesses would likely not be able to meet the proposed performance requirements because they do not have a side structure that can be reinforced and/or padded to mitigate forces on the Q3s in the side test. At the same time, we recognize that there is a niche served by harnesses on certain school buses and special needs buses, one whose needs cannot be met by any other type of CRS. In addition, the side impact crash environment of a school bus is significantly different from that simulated by the proposed sled test procedure (which simulates a near-side impact of a small passenger car). Accordingly, we propose excluding harnesses from the proposed side impact requirements.

Car beds would also be excluded from the proposed requirements. Car beds do not ''seat'' children but instead restrain or position a child in a supine or prone position on a continuous flat surface. FMVSS No. 213 requires manufacturers of car beds to provide instructions stating that the car bed should be positioned in the vehicle such that the child's head is near the center of the vehicle. We believe that, due to the supine position and location of the head of the child, the risk of injury and the injury patterns of children in car beds are much different from those of children seated forward- or rear-facing. There is no accident data available that show that benefits would accrue from applying the proposed side impact protection standard to car beds.

VII. Real World Analysis

The motor vehicle occupant fatality rate among children 4 YO and younger has declined from 4.5 in 1975 to 1.54 in 2009 (per 100,000 occupants). This decline in fatality rate is partially attributed to increased use of child restraint systems. The 2009 NSUBS found that most (92 percent) children 0 to 7 YO were riding in the rear seats of vehicles and were restrained in CRSs (98 percent of 0 to 1 YO children, 93 percent of 1 to 3 YO children, and 55 percent of 4 to 7 YO children).[34]

According to the 2009 FARS data files, there were 33,808 persons killed in motor vehicle crashes in 2009, 322 of whom were children aged 4 and younger killed in passenger vehicle crashes. Among the 322 child occupant fatalities, 92 (29 percent) were unrestrained, 27 (8 percent) were restrained by vehicle seat belts, 178 (55 percent) were restrained in CRSs, and 25 (8 percent) had unknown restraint use.[35]

In 1996, the agency estimated the effectiveness of CRSs and found the devices to reduce fatalities by 71 percent for children younger than 1 YO and by 54 percent for toddlers 1 to 4 YO in passenger vehicles.[36] For today's NPRM, the agency updated the 1996 effectiveness estimates by conducting a similar analysis using the FARS data files for the years 1995–2009.[37] In the updated analysis,[38] only non-rollover frontal and side crashes of passenger cars and LTVs were considered. (CRS effectiveness was estimated for each crash mode. Due to small sample size of unrestrained children less than 1 YO, the 0 to 1 YO age group was combined with the 1 to 3 YO age group for determining CRS effectiveness for each crash mode.) The results indicate that in non-rollover frontal crashes, CRSs currently in use are 53 percent effective in preventing fatalities among children 0 to 3 YO and 43 percent effective among children 4 to 7 YO. In non-rollover side crashes, CRSs currently in use are 42 percent effective in preventing fatalities among 0 to 3 YO and 51 percent effective among 4 to 7 YO children.

The agency estimates that the lives of 284 children 4 YO and younger were saved in 2009 due to the use of child restraint systems. At 100 percent use of child restraint systems for children 0 to 4 YO, an estimated 372 lives would have been saved in 2009.[39] This estimate accounts for consumers' real-world use of child restraints, i.e., these lives would be saved even when the CRSs are misused.

Failure to use proper occupant restraints is a significant factor in a large number of child occupant fatalities resulting from motor vehicle crashes. In

[32] Currently, FMVSS No. 213 prohibits manufacturers from recommending belt-positioning seats for children weighing less than 13.6 kg (30 lb).

[33] This discussion also applies to convertible or front-facing child restraint systems that are equipped with an internal harness, that are also sold for use as a belt-positioning booster once the child reaches a certain weight or height (the consumer is instructed to remove the harness when using the CRS as a belt-positioning seat). Under this NPRM, a CRS that is marketed for use as a belt-positioning seat for children in a weight range that includes children weighing less than 18 kg (40 lb) would be tested in the belt-positioning ''mode'' to the side impact requirements.

[34] Tony Jianquiang Ye and Timothy Pickrell, NHTSA, DOT HS 811 377, September 2010.

[35] Children, Traffic Safety Facts—2009 data, DOT HS 811 387, NHTSA, *http://www-nrd.nhtsa.dot.gov/pubs/811387.pdf,* last accessed August 9, 2012.

[36] ''Revised Estimates of Child Restraint Effectiveness,'' Research Note, supra.

[37] Details of the analysis method are provided in the supporting technical document in the docket for this NPRM.

[38] Details of the updated analysis are provided in the supporting technical document in the docket for this NPRM.

[39] Tony Jianquiang Ye and Timothy Pickrell, Child Restraint use in 2009—Overall Results, NHTSA, DOT HS 811 377, September 2010.

addition, fatalities among children properly restrained in child restraints are often attributed to the severity of the crash. Sherwood [40] examined the FARS database for the year 2000 and determined that there were 621 child occupant fatalities in the age range of 0 to 5 years. Among these 621 fatalities, 143 (23 percent) children were reported to be in child restraints. Detailed police reports were available for 92 of the 143 fatally injured children restrained in CRSs. Sherwood examined these 92 police reports and determined that half of the 92 fatalities were in un-survivable crashes, 12 percent of the fatalities were judged to result from gross misuse of child restraints, 16 percent in non-catastrophic side impacts, and 13 percent in non-catastrophic frontal impacts. Sherwood noted that side impacts accounted for the largest number of fatalities (40 percent), and in all side impact crashes involving child fatalities, there was vehicle intrusion at the child's seating position.

In-Depth Study of Fatalities Among Child Occupants

The agency further examined the real world crash databases managed by the agency (FARS and the National Automotive Sampling System-Crashworthiness Data System (NASS–CDS)) for the years 2005–2009 to better understand fatalities to children restrained in child restraints when involved in side crashes.

First, we categorized the crash cases involving children (0 to 12 YO) seated in rear seating positions, by restraint use, crash type, and child age. See Tables 5 and 6, below.

TABLE 5—AVERAGE ANNUAL CRASH FATALITIES AMONG CHILDREN 0 TO 12 YO IN REAR SEATING POSITIONS OF LIGHT PASSENGER VEHICLES CATEGORIZED BY RESTRAINT TYPE AND AGE

[FARS 2005–2009]

Restraint	Age (years)				Total
	Under 1	1–3	4–7	8–12	
None	13.4	39.8	68	91.6	212.8
Adult Belt	1.8	11.6	57.4	78.2	149
CRS	55.8	106	54.2	4.4	220.4
Unknown	2.8	6.6	12.8	14.6	36.8
Total	73.8	164	192.4	188.6	619

Annually, there were 619 crash fatalities among children 0 to 12 YO seated in rear seating positions of light vehicles. Among these fatalities, 220 (36 percent) were to children restrained in CRSs (162 were 0 to 3 YO and 58 were 4 to 12 YO). Nearly three-quarters of the CRS restrained child fatalities were to children 0 to 3 YO.

As shown in the last column of Table 6, among the 220 fatalities of children 0 to 12 YO restrained in rear seats of light passenger vehicles and in CRSs, approximately 32 percent occurred in frontal crashes, 31 percent in side crashes, 25 percent in rollovers, and 11 percent in rear crashes. Approximately 60 percent of side impact fatalities (41/68.4) were in near-side impacts. (''Far-side'' position means the outboard seating position on the opposite side of the point of impact.)

TABLE 6—AVERAGE ANNUAL CRASH FATALITIES AMONG CHILDREN 0 TO 12 YO IN REAR SEATING POSITIONS OF LIGHT PASSENGER VEHICLES AND RESTRAINED IN CRSS BY CRASH MODE AND AGE

[FARS 2005–2009]

Crash mode	Age (years)				Total	Percent total
	<1	1–3	4–7	8–12		
Rollover	13.8	26.4	13.4	1.4	55	25
Front	16	35.6	19.8	1	72.4	32
Side	17.4	34.8	15	1.2	68.4	31
Near-side	10.6	20	9.6	0.8	41	18.6
Far-side	6.8	14.8	5.4	0.4	27.4	12.4
Rear	8.6	9.2	6	0.8	24.6	11
Total	55.8	106	54.2	4.4	220.4	100

Of the side impact crash fatalities among CRS restrained children 0 to 12 YO in rear seating positions, three quarters of near side fatalities (30.6/41) were to children under the age of 4.

In-Depth Study of Injuries to Child Occupants in Motor Vehicle Crashes

In 2010, the agency published an analysis of the NASS—General Estimates System (GES) data for the years 1999–2008 to better understand injuries to children in motor vehicle traffic crashes.[41] The analysis was conducted for three different child age groups (<1 YO, 1 to 3 YO, and 4 to 7 YO) and for different crash modes (rollover, front, side, and rear). The

[40] Sherwood, C.P., Ferguson, S.A., Crandall, J.R., ''Factors Leading to Crash Fatalities to Children in Child Restraints,'' 47th Annual Proceedings of the Association for the Advancement of Automotive Medicine (AAAM), September 2003.

[41] Hanna, R., ''Children Injured in Motor Vehicle Traffic Crashes,'' DOT HS 811 325, NHTSA, May 2010, *http://www-nrd.nhtsa.dot.gov/Pubs/811325.pdf*, last accessed on July 2, 2012.

analysis indicated that CRSs are effective in reducing incapacitating injuries in all three child age groups examined and in all four crash modes. The analysis found that rollover crashes accounted for the highest rate of incapacitating injuries, with the incidence rate among unrestrained children (26 percent) being nearly 3 times that for children restrained in CRSs (9 percent). In near-side impact crashes, unrestrained children (incidence rate = 8 percent) were 8 times more likely to sustain incapacitating injuries than children in CRSs (incidence rate = 1 percent).

In support of the NPRM, the agency analyzed NASS–CDS for the years 1995–2009 to obtain annual estimates of moderate or higher severity injuries (AIS 2+ injuries) among children of different ages in different restraint environment and crash modes. See Table 7 and 8.

TABLE 7—AVERAGE ANNUAL ESTIMATES OF 0 TO 12 YO CHILDREN WITH AIS 2+ INJURIES IN REAR SEATING POSITIONS OF LIGHT PASSENGER VEHICLES INVOLVED IN MOTOR VEHICLE CRASHES BY RESTRAINT TYPE

[NASS–CDS 1995–2009]

Restraint	Age (years)				Total	Percent total
	Under 1	1–3	4–7	8–12		
None	26	174	765	969	1934	31.7
Adult Belt	0	93	722	1550	2365	38.7
CRS	164	883	422	16	1485	24.3
Unknown if used	1	32	215	66	314	5.1
Total	191	1182	2124	2601	6098	100

Annually, there were, on average, approximately 6,100 AIS 2+ injuries to children 12 YO and younger seated in the rear seats of light passenger vehicles with 1,373 of these injured occupants being younger than 4 YO. Approximately 1,485 CRS restrained children 12 YO and younger sustained AIS 2+injuries, among which 1,047 (71 percent) were children younger than 4 YO and 422 (28 percent) were 4 to 7 YO children.

The NASS–CDS data files for the years 1995–2009 were further analyzed to determine crash characteristics. Table 8 presents the average annual estimates of 0 to12 YO children with AIS 2+ injuries in rear seating positions of light passenger vehicles. Thirty-one percent of the children were injured in side crashes, 40 percent in frontal crashes, and 23 percent in rollover crashes.

TABLE 8—AVERAGE ANNUAL ESTIMATES OF 0 TO 12 YO CHILDREN WITH AIS 2+ INJURIES IN REAR SEATING POSITIONS OF LIGHT PASSENGER VEHICLES INVOLVED IN MOTOR VEHICLE CRASHES BY CRASH MODE

[NASS–CDS 1995–2009]

Rollover status, damage type	Age (years)				Total	Percent of known
	<1	1–3	4–7	8–12		
Rollover	38	278	372	704	1,392	23
Front	103	356	777	1138	2,374	40
Side	34	371	893	652	1950	31
Near-Side	24	280	464	438	1,209	19
Far-Side	10	91	429	214	741	12
Rear	17	139	82	106	344	6
Other	0	36	0	1	37	1
Total	192	1,180	2,124	2,601	6,097	100

To better understand the crash characteristics of children restrained in child restraints, a similar analysis as that shown in Table 8 was conducted except that only the cases where the children were restrained in CRSs were included in the analysis. The results are presented in Table 9.

TABLE 9—AVERAGE ANNUAL ESTIMATES OF 0 TO 12 YO CRS RESTRAINED CHILDREN WITH AIS 2+ INJURIES IN REAR SEATING POSITIONS OF LIGHT PASSENGER VEHICLES INVOLVED IN MOTOR VEHICLE CRASHES BY CRASH MODE

[NASS–CDS 1995–2009]

Crash mode	Age (years)				Total
	Under 1	1–3	4–7	8–12	
Rollover	28	148	44	0	220
Front	94	310	214	16	634
Side	31	307	137	0	475
Near-side	22	253	44	0	319
Far-side	9	54	93	0	156

TABLE 9—AVERAGE ANNUAL ESTIMATES OF 0 TO 12 YO CRS RESTRAINED CHILDREN WITH AIS 2+ INJURIES IN REAR SEATING POSITIONS OF LIGHT PASSENGER VEHICLES INVOLVED IN MOTOR VEHICLE CRASHES BY CRASH MODE—Continued

[NASS–CDS 1995–2009]

Crash mode	Age (years)				Total
	Under 1	1–3	4–7	8–12	
Rear	12	98	26	0	136
Total	165	863	421	16	1465

For AIS 2+ injured 12 YO and younger child occupants in passenger vehicles restrained in CRSs in rear seating positions, 15 percent of the injuries were in rollover events, 43 percent in frontal crashes, 33 percent in side crashes, and 9 percent in rear crashes. Sixty-seven percent (319/475) of the occupants in side crashes were in near-side impacts.

In the above analyses some of these injuries and fatalities involved children in seats that were incorrectly used. However, we do not have complete data on the number accidents that involved misuse because accident databases do not generally collect data on how child restraints were used.

VIII. Past NHTSA Efforts

In the past, NHTSA has explored the possibility of side impact requirements for child restraints in FMVSS No. 213.

When NHTSA first considered dynamic testing of child restraints (39 FR 7959; March 1, 1974), the agency proposed a 90 degree lateral impact simulating a 32 km/h (20 mph) crash. NHTSA proposed that each CRS would have to retain the test dummy within the system, limit head motion to 483 mm (19 inches (in)) in each lateral direction measured from the exterior surface of the dummy's head, and suffer no loss of structural integrity.

NHTSA withdrew the proposal after testing a number of restraints at a speed of 32 km/h (20 mph) and at a horizontal angle of 60 degrees from the direction of the test platform travel. The tests found that for outboard seating positions, only one of those restraints—one that required a tether—could meet the lateral head excursion limits that had been proposed. This was of concern because tethers were widely unused at that time. Further, the agency found that some restraints with impact shields, which, the agency stated, performed well in frontal crashes and which were rarely misused, could not pass the lateral test even when placed in the center seating position. The agency decided not to pursue lateral testing of child restraints given the cost of the design changes that would have been necessary to meet the lateral test, the problems with misuse of tethers, and the possible price sensitivity of child restraint sales. (43 FR 21470, 21474; May 18, 1978.)

In 2002, in response to the Transportation Recall Enhancement, Accountability and Documentation Act (''TREAD Act'') (Pub. L. 106–414, 114 Stat. 1800), NHTSA issued an advance notice of proposed rulemaking (ANPRM) to request comments on the agency's work in developing a possible side impact protection requirement for CRSs (67 FR 21836, May 1, 2002).

Information indicated that child head injury was prevalent in side crashes. However, the agency was not able to confirm whether the majority of injuries and fatalities occur primarily due to direct head contact with the vehicle interior or other objects in the vehicle, or whether these injuries and fatalities are a result of non-contact, inertial loading on the head and neck structure. Due to these unknowns about head injury causation, the agency considered two side impact performance tests for child restraints. The tests were modeled after the simulated side impact test administered by the New South Wales, Australia, Roads and Traffic Authority (discussed in the next section). In one test, the CRS had to limit head excursion and HIC[42] when oriented at 90 degrees to the direction of sled travel. In the second test developed by NHTSA, a rigid structure, representing the side of the vehicle's interior side structure, was positioned adjacent to the child restraint. Limits on HIC, chest acceleration, a neck injury criterion and chest deflection were considered.

The ANPRM requested information on the following areas: (a) Determination of child injury mechanisms in side impacts, and crash characteristics associated with serious and fatal injuries to children in child restraints; (b) development of test procedures, a suitable test dummy and appropriate injury criteria; and (c) identification of cost beneficial countermeasures.

The agency received approximately 17 comments on the ANPRM. Commenters supported enhancing child passenger protection in side impacts, but were concerned about the uncertainties with respect to the three areas highlighted above. A number of commenters believed that a dynamic test should account for some degree of vehicle intrusion into the occupant compartment.

NHTSA withdrew the ANPRM after considering the comments on the ANPRM and other information. The agency found that for side crashes: (a) Data were not widely available as to how children are being injured and killed in side impacts (e.g., to what degree injuries were caused by intrusion of an impacting vehicle or other object); (b) there was not a consensus on an appropriate child test dummy and associated injury criteria for side impact testing; and, (c) potential countermeasures for side impact intrusion were not identified. NHTSA determined that an NPRM was not feasible given unknowns about side crashes involving children in CRSs and the time constraints of the TREAD Act.

IX. Side Impact Program Developments

Notwithstanding the ANPRM's withdrawal, NHTSA continued research into improved side impact protection requirements for child restraints.

As discussed in this section, the state of knowledge about side crashes and CRS-restrained children is considerably greater now than it was in 2002. Information about how restrained children are being injured and killed in side crashes has become increasingly available in recent years. In addition, the agency has continued to evaluate test parameters and potential methodologies to replicate a representative side impact scenario that could potentially be developed into a dynamic side impact test procedure.

[42] Head injury criterion.

a. Side Impact Environment for Children

Sherwood [43] analyzed fatalities of children under 5 years of age and found that even in survivable crashes there was intrusion into the interior space occupied by the child. Arbogast [44] found intrusion to be an important causative factor for moderate/serious injury and suggested that side impact test procedures include intrusion into the occupant space. Howard [45] found that struck side child passengers sustained severe head, torso and extremity injuries, many of them attributable to direct intrusion.

Sherwood also found that most side crashes had a longitudinal crash component and recommended that child restraints be designed to take into account both longitudinal and lateral components of the direction of force in a side crash. This finding accords with that found by NHTSA while developing FMVSS No. 214 (55 FR 45733), where data showed that during most side impact crashes, the struck vehicle is traveling forward while being struck on the side.

Nagabhushana [46] noted that vehicle crashes involving child occupants most often had a principal direction of force of 2 o'clock (60 degrees) or 10 o'clock (300 degrees). Nagabhushana also found that the average change in velocity in side crashes involving children 1 to 3 YO (in crashes where the child was positioned near-side, on the struck side of the vehicle) was 23 km/h (14 mph). NHTSA examined NASS–CDS data files for the years 1995–2009 for side impact crashes of light vehicles and found that 92 percent of near-side crashes to restrained children (0 to 12 YO) had a change in velocity of 30 km/h (19 mph) or lower. This change in velocity is approximately equal to that experienced by a light vehicle in a FMVSS No. 214 MDB side impact test. This 92 percent is of all near side crashes involving restrained children 0–12 years old. These near-side crashes were not only fatal crashes, but also included those where occupants were not injured or sustained non-fatal injuries.

b. Injury Mechanisms in Side Impact

McCray (2007) [47] analyzed the NASS–CDS and Crash Injury Research and Engineering Network (CIREN) data files for the years 1995–2005 to better understand injuries to children 1 to 3 YO in side impact crashes. The study found that children restrained in CRSs exhibited more head injuries (59 percent) than torso injuries (22 percent) and injuries to extremities (14 percent). Children in near-side crashes tended to suffer more severe injuries than those in far-side crashes.

Arbogast (2004) [48] queried the Partners for Child Passenger Safety Study (PCPS) data collected from December 1, 1998 to November 30, 2002 and found that the risk of injury (AIS 2+: moderate or greater severity) for children restrained in CRSs in near-side impact crashes was significantly higher (8.9 injured children per 1,000 crashes) than those in far-side [49] impact crashes (2.1 injured children per 1,000 crashes) and those in frontal crashes (2.7 injured children per 1,000 crashes).

NHTSA analyzed NASS–CDS average annual estimates (1995–2009) for AIS 2+ injuries to children 0 to 12 YO in rear seats. The most common AIS 2+ injuries among restrained children in near-side impacts were to the head and face (55 percent), torso (chest and abdomen—29 percent), upper and lower extremities (13 percent). The most common injury contacts for AIS 2+ injuries were the side interior (33 percent), the front seat back (11.12 percent) and the CRS (9 percent).[50]

Arbogast (2010) [51] examined two in-depth crash investigation databases (CIREN and the PCPS) for rear-seated CRS-restrained children in side impact crashes who sustained AIS 2+ injuries. Arbogast found that among the 41 cases examined, 28 children sustained head injuries and 9 sustained thoracic injuries (lung contusions without rib fractures). In general, head and thorax injuries were due to contact with the CRS structure or the door interior. For near- and center-seated occupants, the head and face were the most common body regions of injury, followed by the thorax. For far-side occupants, there were fewer injuries and there was no clear pattern of body region.

c. Global Dynamic Side Impact Tests

Globally, several organizations have developed or continued work on side impact test procedures for child restraints.

- Australia and New Zealand's dynamic side impact test procedure (AS/NZS 1754 Revision 2004) specifies two different side impact tests. The first test simulates a far-side crash, in which a bench seat with a CRS attached to it is mounted on a sled at a 90 degree orientation and is subjected to lateral acceleration representative of that in a side impact vehicle crash. The second test simulates a near-side crash, incorporating a bench seat mounted at 90 degrees on the sled along with a fixed door mounted at the front of the sled adjacent to the bench seat. The sled is calibrated to undergo a velocity change of not less than 32 km/h (20 mph), with a deceleration of 14–20 g. P-series dummies developed by the Netherlands Organization for Applied Scientific Research (TNO) are used to test forward-facing seats and boosters, and the TNO P-series and the TARU Theresa dummy are used for infant rear-facing restraints. The AS/NZS 1754 regulation specifies that the child restraints shall not allow any head contact with any part of the test door. (The P-series ATDs are frontal impact test dummies. They were not specially designed for use in side impacts. The TARU Theresa dummy represents a 6-week-old infant and is an uninstrumented dummy with a weight of only 4 kg (9 lb).)
- Australia's consumer information program rates the performance of CRSs in side impacts through the ''Child Restraint Evaluation Program'' (CREP). The test procedure is similar to AS/NZS 1754. CREP utilizes two side impact tests for its CRS rating system; one test is at a 90 degree impact and the other is at a 66 degree [52] impact, both with a fixed door structure in place. The velocity of the sled is 32 km/h (20 mph) and its peak deceleration is 17 g. CREP rates the child restraint system in the side impact test based on child restraint durability and structural integrity, dummy retention in the CRS, and head excursion and contact with the wall.

[43] Sherwood, et al., 2003, *supra.*

[44] Arbogast, K.B., Chen, I., Durbin, D.R., and Winston, F.K., ''Injury Risks for Children in Child Restraint Systems in Side Impact Crashes,'' International IRCOBI Conference on the Biomechanics of Impact, October 2004.

[45] Howard, A., Rothman, L., Moses McKeag, A., Pazmino-Canizares, J., Monk, B., Comeau, J.L., Mills, D., Blazeski, S., Hale, I., and German, A., ''Children in Side-Impact Motor Vehicle Crashes: Seating Positions and Injury Mechanisms,'' The Journal of Trauma, Injury, Infection, and Critical Care, Vol. 56, No. 6, pp. 1276–1285, 2004.

[46] Nagabhushana, V., Morgan, R., Kan, C., Park, J., Kuznetsov, A., ''Impact Risk for 1–3 Year-Old Children on the Struck Side in a Lateral crash,'' DOT HS 810 699, April 2007.

[47] McCray, et al., 2007, *supra.*

[48] Arbogast, et al., 2004, *supra.*

[49] Far-side impacts are side impact crashes where the occupant is seated away from the struck-side of the vehicle (center seating position or opposite the struck-side of the vehicle).

[50] In comparison, data showed that the most common AIS 2+ injuries among children restrained in frontal impacts were to the head and face (42 percent), torso (chest and abdomen—27 percent), and upper and lower extremities (25 percent). The most common injury contacts for AIS 2+ injuries were the seat back support (50 percent) and the belt webbing or buckle (19 percent).

[51] Arbogast, K.B., Locey, C.M., Zonfrillo, M.R., Maltese, M.R., ''Protection of Children Restrained in Child Safety Seats in Side Impact Crashes,'' Journal of Trauma, 2010, October, 69(4): 913–23.

[52] Previously this was a 45 degree impact.

• Germany's Allgemeiner Deutscher Automobil-Club (ADAC) adopted a consumer information rating program. The procedure uses a body-in-white of a VW Golf or Opel Astra. The body-in-white [53] structure is mounted on a sled at an 80 degree angle. The vehicle door does not intrude into the passenger area; the door is welded shut and covered with foam creating a flat door. The sled is decelerated from an initial velocity of 25 km/h (16 mph) with an 18 g acceleration pulse. This test method is used to determine ADAC star ratings based on head containment, head acceleration, chest acceleration, neck moment and neck force of the Q series dummies and the P10 (P-series, 10 YO child dummy) for booster seats.

• The International Standards Organization (ISO) and TNO have continued to work on developing a side impact test which uses a rotating hinged door to simulate door intrusion into the CRS.[54]

• The World Forum for the Harmonization of Vehicle Regulations (WP.29) of the European Union (EU) approved Phase I (total of 3 phases) of a new regulation on child restraint systems in November 2012, which includes a side impact test procedure.[55] The test procedure is currently only intended for evaluating CRSs with rigid ISOFIX anchorages.[56] The regulation's test procedure consists of a fixed flat door on a sled that intrudes into a CRS secured on a bench seat using the ISOFIX anchorages. The relative velocity between the door and the bench seat at time of impact is approximately 25 km/h (16 mph). The impact is purely lateral with no longitudinal door velocity component. The ISOFIX anchorages on the test bench are allowed to slide along the seat up to 250 mm to avoid damage of the attachments and the test equipment. The CRSs are tested using the Q-series newborn, 1 YO, 1½ YO, and 3 YO child dummies in accordance with manufacturers' recommended size of child for the CRS. Injury criteria include head containment (no contact of the head with the door panel), head acceleration, and a head injury criterion.

• European authorities are developing a new consumer program, ''New Programme for the Assessment of Child Restraint Systems (NPACS),'' [57] to create a harmonized program for the evaluation of ISOFIX universal and ISOFIX semi-universal [58] child restraints. This rating program would include a side impact test for CRSs and will utilize ATDs. Details of the test procedure are not available at this time, but it is the agency's understanding that, although the eventual test procedure may share some aspects with the recent ECE regulation, it will likely not be based on the same test method.

• Takata developed a sled test buck for testing child restraints in a side impact environment. The buck has two moving fixtures: The sled buck itself and the sliding ''vehicle'' seat on which the child restraint is attached. The sliding ''vehicle'' seat is mounted to a rail system, along with a ''side door'' structure rigidly mounted to the sled buck structure. The details of this test procedure are described more fully in section IX.

d. Side Impact Test Dummy

The development of a specially-designed child side impact test dummy, the Q3s, has provided an important tool for evaluating CRSs in side impact. The Q3s is built on the platform of the standard Q3 dummy series (the Q-series are frontal ATDs used in Europe), but the Q3s has enhanced lateral biofidelity, durability and additional instrumentation for specialized use in side impact testing. The Q3s is more fully discussed in the 49 CFR Part 572 NPRM.

X. Developing NHTSA's Side Impact Test

The state of knowledge and the practicability of measures that can be taken to improve side impact protection are now sufficient for NHTSA to propose a reasonable and realistic side impact test for incorporation into FMVSS No. 213.

Based on the information that has become available since the 2002 ANPRM, we tentatively conclude that a side impact is best replicated if the test procedure reflects and replicates dynamic elements of both the striking and struck vehicle in a vehicle-to-vehicle crash. We believe that a side impact test procedure should account for: (1) The struck vehicle door velocity prior to the interaction of the striking vehicle with the door sill of the struck vehicle, (2) the acceleration profile of the struck vehicle, and (3) the impact angle to replicate the longitudinal component of the direction of force. Specification of these parameters, based on actual vehicle crash characteristics, would enable the realistic simulation of the relative velocity between the intruding door and the CRS.

Selection of these parameters is consistent with the findings from other researchers (see Side Impact Environment for Children, section IX, *supra*) that found the change in velocity, the level of door intrusion, and the impact angle to be significant factors of near-side impact crashes involving children. In addition, the test bench and door geometry and vehicle seat and door padding characteristics are important in a side impact test, to ensure these are representative of the vehicle rear seat environment.

a. Assessment of Existing Global Efforts

In order to build on existing efforts, NHTSA reviewed the above procedures and regulations developed globally that dynamically test child restraints in the side impact environment. Except for the Takata test procedure, the procedures and regulations did not replicate all of

[53] Body-in-white refers to a stage of automobile manufacturing in which the car body sheet metal has been welded and assembled but before the motor and chassis assemblies have been added.

[54] Johannsen, H., et al., ''Review of the Development of the ISO Side Impact Test Procedure for Child Restraint Systems,'' 20th International Technical Conference on the Enhanced Safety of Vehicles, Paper No. 07–0241, Lyon, France, 2007. *http://www-nrd.nhtsa.dot.gov/pdf/esv/esv20/07-0241-W30.pdf.* Last accessed May 3, 2012.

[55] *http://www.unece.org/fileadmin/DAM/trans/doc/2012/wp29/ECE-TRANS-WP29-2012-53e.pdf.*

[56] The ISOFIX concept originated as a 4-point rigid system, where four sturdy braces are mounted on the bottom of a child restraint. Each brace has a latch at its end. Two of the latches connect, through holes at the vehicle seat bight, to a metal bar in the seat frame. The other two latches, at the bottom braces, connect to a bar below the vehicle seat cushion. Alternatives to the concept 4-point ISO system have been developed, including a system that consists of the CRS having two rigid rear braces at the seat bight (rather than the 4 points of the original ISOFIX). Some ISOFIX concepts have included an upper tether, some have included a support leg (see next footnote, below). FMVSS No. 225's ''LATCH'' system grew out of the ISOFIX concept, as the lower bars of the LATCH system are similar to the seat frame bar at the seat bight in ISOFIX. LATCH requires the CRS to have components that attach to the vehicle's lower bars, but LATCH does not require the components to be rigidly attached to the CRS as on a brace. The components may be attached to the CRS by webbing material. Because of these differences, a test designed for ISOFIX systems is generally not appropriate for testing LATCH systems, and vice versa.

[57] NPACS is similar to NHTSA's (and the general European) New Car Assessment Program (NCAP), in that it is a voluntary consumer information program, rather than a binding regulation. The difference is that NPACS is being designed to test the CRS itself, while NCAP focuses on how the vehicle performs.

[58] ISOFIX universal CRS means forward-facing restraints for use in vehicles with positions equipped with ISOFIX anchorages and a top tether anchorage. ISOFIX semi-universal CRS means: (a) A forward-facing restraint equipped with a support leg; (b) a rearward facing restraint equipped with a support leg or a top tether strap for use in vehicles with positions equipped with an ISOFIX anchorage system and a top tether anchorage if needed; (c) a rearward facing restraint, supported by the vehicle dashboard, for use in the front passenger seat equipped with an ISOFIX anchorage system; or (d) a lateral facing position restraint equipped, if needed, with an anti-rotation device for use in vehicles with positions equipped with an ISOFIX anchorage system and a top tether anchorage, if needed.

the dynamic elements of a side crash that we sought to include in the side impact test or were not sufficiently developed for further consideration.

NHTSA considered AS/NZS 1754 for implementation into FMVSS No. 213 but has not proposed it, mainly because the procedure does not simulate the intruding door, which we believe is an important component in the side impact environment. In addition, AS/NZS 1754 does not account for a longitudinal component, which we also believe to be an important characteristic of a side crash. (As noted above, NHTSA's 2002 ANPRM, *supra,* was based on AS/NZS 1754. Commenters to the ANPRM believed that a dynamic test should account for some degree of vehicle intrusion into the occupant compartment.) Australia's CREP test also was limited by its lack of an intruding door, which is a component that is important in the side impact environment.

Germany's ADAC test procedure lacks an intruding door. Further, the vehicles represented by the body-in-white in Germany's ADAC test procedure are limited, and do not represent the range of vehicles in the U.S. fleet that we would like to have represented in our side impact test to safeguard child passengers in the U.S.

While the ISO/TNO test procedure accounts for the deceleration and intrusion experienced by a car in a side impact crash, one of its limitations is that the angular velocity of the hinged door is difficult to control, which reportedly results in poor repeatability.[59] In addition, this test procedure does not include a longitudinal velocity component to the intruding door, which is present in most side impacts and which, we believe, should be replicated in the FMVSS No. 213 test.

The EU's test procedure did not appear appropriate since the test is of lower severity than the FMVSS No. 214 MDB side impact crash test of a small passenger vehicle. Moreover, the test procedure is only intended for evaluating CRSs with rigid ISOFIX attachments, which are not available on CRSs in the U.S., and, due to the differences in to the two systems discussed above, a test designed for one type of system will not produce useful results for testing the other system. Further, the test procedure does not seem to produce a representative interaction between the door and CRS during a side impact. The NHTSA-developed test procedure replicates a real-world T-bone type intersection collision, involving two moving vehicles, with door intrusion. In contrast, the European test with the sliding ISO anchorages is a purely lateral impact (stationary vehicle impacted laterally by another vehicle) and it does not correctly represent the door intrusion and door to child restraint interaction in real world side crashes, In addition, the sliding anchors in the European test allow for the child restraint to slide away from the impacting door, which also causes the European test be less reflective of a real-world crash than the test proposed in today's NPRM. The European test is likewise sensitive to the friction of the sliding anchorages, which may introduce variability in the test results.[60] Finally, the European procedure uses the Q series dummies, which are frontal crash dummies. NHTSA evaluated the Q3 dummy and has tentatively concluded that the Q3 dummy does not have adequate biofidelity in lateral impact, in contrast to the Q3s dummy we propose, which is designed for side impacts.

The NPACS consumer program for side impact is still undergoing development and the details of the sled test procedure and dummies are not available.

b. Takata Test Procedure

In 2007, the agency began evaluating the Takata sled test procedure for evaluating child restraints in side impact.[61] The test procedure demonstrated versatility for tuning parameters to obtain the desired test environment. NHTSA could tune the parameters to simulate the two-vehicle side crash replicated in the MDB test of FMVSS No. 214 (striking vehicle traveling at 48 km/h (30 mph) impacting the struck vehicle traveling at 24 km/h (15 mph), which accounts for approximately 92 percent of near-side crashes involving restrained children (0 to 12 YO children in all restraint environments—seat belts and CRSs). The procedure includes an intruding door and can simulate the relative velocity between the CRS and the intruding door. It can also be easily modified to change the impact angle to introduce a longitudinal component present in the FMVSS No. 214 tests.

In its preliminary evaluation of the Takata test protocol, after making minor modification to the test parameters,[62] NHTSA determined that the test procedure was repeatable and was able to provide results that distinguished between the performance of various CRS models based on the design of the side wings and stiffness of the CRS padding.[63]

The Takata procedure is based on an acceleration sled with a test buck consisting of a sliding ''vehicle'' seat mounted to a rail system, along with a ''side door'' structure rigidly mounted to the sled buck structure. The vehicle seat and side door are representative of today's passenger vehicles. Aluminum honeycomb is mounted below the side door structure. The sliding vehicle seat is positioned sufficiently away from the side door to allow the sled to reach a desired velocity prior to the sliding vehicle seat coming into contact with the side door and aluminum honeycomb. The purpose of the design is for the side door structure to impact the sliding ''vehicle'' seat at a specified speed, at which time the aluminum honeycomb begins to crush. The door contacts the CRS about the same time as the honeycomb contacts the sliding ''vehicle'' seat. The honeycomb characteristics are selected such that the desired sliding seat acceleration is achieved. The procedure is illustrated in Figure 1 below.

[59] Sandner, V., et al., ''New Programm for the Assessment of Child Restraint Systems (NPACS)—Development/Research/Results—First Step for Future Activities?,'' 21st International Conference on the Enhanced Safety of Vehicles, Paper Number 09–0298, 2009. *http://www-nrd.nhtsa.dot.gov/pdf/esv/esv21/09-0298.pdf.* Last accessed on June 11, 2012.

[60] Hynd, et al., ''Analysis for the development of legislation on child occupant protection,'' TRL, July 2010.

[61] Takata made a presentation on its side impact test procedure during a February 8, 2007 NHTSA public meeting. The meeting concerned: Improving LATCH, CRS side impact safety, and LATCH education. See meeting notice, 72 FR 3103, January 24, 2007, Docket No. NHTSA–2007–26833. NHTSA also published two papers on the agency's research and testing on the Takata test procedure. See Sullivan 2009 and Sullivan 2011, *infra.*

[62] Sullivan, 2009, *supra.*

[63] Sullivan et al., ''NHTSA's Evaluation of a Potential Child Side Impact Test Procedures,'' 22nd International Conference on the Enhanced Safety of Vehicles, Paper No. 2011–0227 (2011).

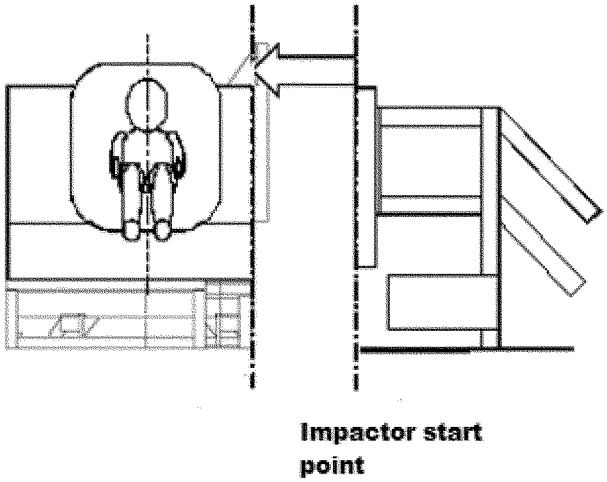

(a) Pre-Test Condition

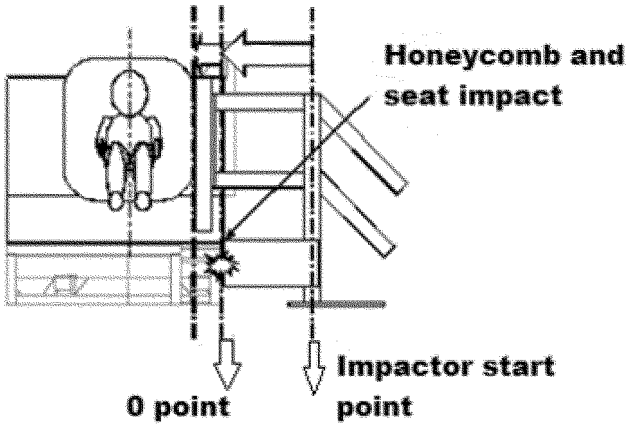

(b) At Time of Door Contact With CRS

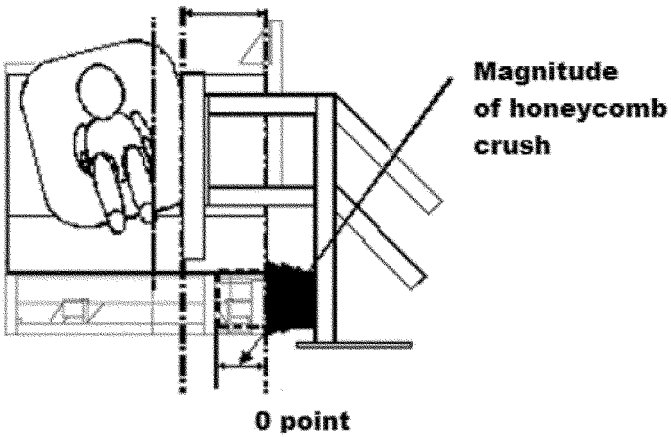

(c) At End of Test

Figure 1 - Takata Side Impact Sled System--(a) Pre-test condition, (b) At time of door contact with CRS, (c) At end of test (final travel of door).

After considering the Takata test procedure, NHTSA selected the test method as a basis for developing a side impact test for evaluating CRS performance.

XI. The Proposed Test Procedure

As shown above, the proposed test buck consists of a sliding ''vehicle'' seat and ''side door'' rigidly mounted to the

acceleration sled buck structure. Aluminum honeycomb is mounted below the side door structure. The side door is made to reach a desired velocity prior to the aluminum honeycomb coming into contact with the sliding ''vehicle'' seat structure. The parameters of the test buck and the honeycomb could be tuned to simulate the MDB test of FMVSS No. 214.

The agency examined data from FMVSS No. 214 MDB compliance tests to identify kinematic characteristics of the vehicle test that should be replicated in the sled test environment so that the latter is representative of the crash experience of a child restrained in a CRS in the rear seat. The following sled kinematic parameters were identified: (1) The acceleration profile of the sliding seat (representing the struck vehicle acceleration); (2) the door velocity at time of contact with the sliding seat (this represents the struck vehicle door velocity; and (3) the impact angle of the door with the sliding seat (to replicate the longitudinal component of the direction of force).

NHTSA selected and analyzed several FMVSS No. 214 MDB tests of small passenger vehicles to determine the test parameters and test corridors representative of the target crash environment. The agency determined that a small passenger vehicle in an FMVSS No. 214 MDB crash test experiences a lateral change in velocity of about 30 km/h (18.6 mph). This change in velocity is greater than 92 percent of near-side impact real-world crashes involving restrained children 0 to 12 YO in light vehicles, as estimated by NHTSA using the NASS–CDS datafiles. In order to ensure that the side impact test would be sufficiently stringent to account for the greater acceleration and intrusion experienced by smaller vehicles, the agency focused on the crash characteristics of small passenger vehicles in FMVSS No. 214 side MDB tests, as opposed to the average estimates from all vehicles.

a. Sled Kinematic Parameters

1. Sliding Seat Acceleration Profile (Representing the Struck Vehicle)

To obtain a target acceleration pulse for the sliding seat that represents the motion of the struck vehicle, the right rear sill (the opposite side of impact) lateral (Y-axis) acceleration of ten small vehicles in FMVSS No. 214 tests were analyzed.[64] The right rear sill accelerations were averaged to derive a typical struck vehicle acceleration corridor for small sized vehicles. Figure 2 shows the upper and lower boundaries of the rear sill accelerations in thick solid black lines while the dotted line represents the average of the accelerations. The solid thin black line in Figure 2 is a representative sliding seat acceleration pulse.

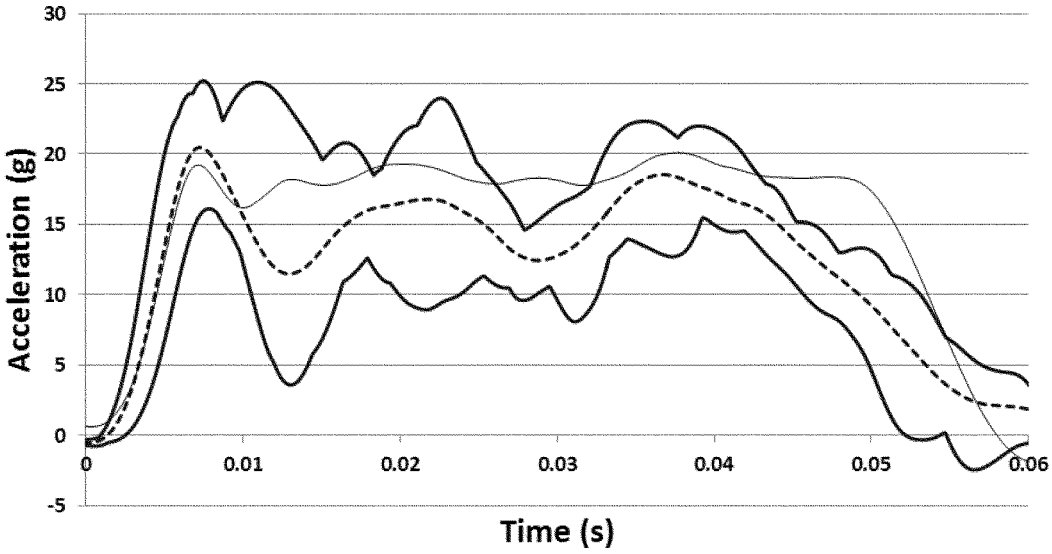

Figure 2 – Average Sliding Seat Acceleration along with Vehicle Lateral Acceleration Corridor

To obtain the sliding seat velocity (representing the motion of the struck vehicle), the right rear sill lateral (Y-axis) accelerations of the ten small vehicles were integrated to calculate the velocity. The results showed a change in velocity of approximately 26 to 29 km/h (16 to 18 mph).

2. Door Velocity

The door velocity (which represents the struck vehicle door velocity), was obtained from the integration of door acceleration data from four of the ten previously selected FMVSS No. 214 compliance tests (only these four vehicles were tested with accelerometers installed on the door).[65] The resulting lateral (Y-axis) peak velocities of the door during interaction with the test dummy ranged from 30 km/h (18.6 mph) at the upper centerline to 32.0 km/h (20 mph) at the mid-centerline. Thus, the target lateral door velocity selected for the test buck was 31 km/h (19.3 mph). Since the kinematics of the door prior to the interaction with the sliding seat do not affect the energy and impulse imparted to the sliding seat and child restraint system, the acceleration profile of the impacting door need not be specified as long as its velocity during the interaction with the sliding seat and child restraint system is maintained within specified velocity tolerances. The door velocity should be 31 km/h (19.3 mph) prior to the honeycomb contacting the sliding seat structure.

[64] Sullivan et al., 2009.

[65] Id.

The relative velocity profile of the intruding door with respect to the sliding seat from the time the door first contacts the sliding seat structure to the time the sliding seat and the door reach a common velocity was determined from sled simulations with a door impact velocity of the 31 km/h (19.3 mph) in the direction of the sliding seat motion and a sliding seat acceleration profile shown in Figure 2. Figure 3 shows the average (dotted line) and the upper and lower boundaries (solid lines) of the velocity profile for the door relative to the sliding seat in sled tests performed during the development of the test procedure. The upper and lower boundaries of the relative door velocity represent the maximum and minimum values of the cluster of relative door velocity profiles in these sled tests.

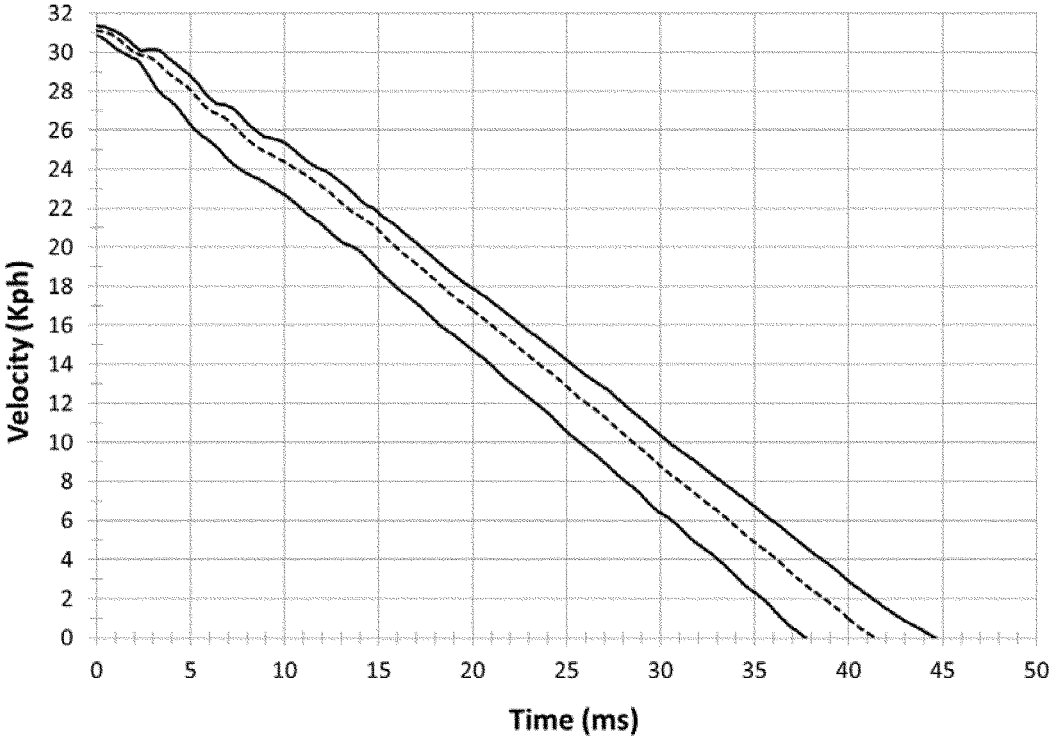

Figure 3 – Average Profile and Upper and Lower Boundaries of the Relative Velocity of the Door with respect to the Sliding Seat

Today's NPRM only proposes an acceleration profile for the sliding seat and a door impact velocity but does not propose a relative door velocity profile so as not to over specify the test environment. However, a door velocity profile with respect to the sliding seat may be desirable to ensure reproducible interaction of the intruding door with the child restraint in different types of sled systems. We are requesting comments on the need for specifying a relative door velocity profile to improve reproducibility of the test procedure. Depending on whether we receive information sufficiently supporting such a velocity profile, we may include one in the final rule.

3. Sled Buck Angle (Replicating Longitudinal Component of the Direction of Force)

The ten small vehicle FMVSS No. 214 tests were used to determine the impact angle of the sled buck. The right rear sill acceleration signals on both the longitudinal (X-axis) and lateral (Y-axis) directions were integrated to obtain the X and Y vehicle velocities. These velocities were used to calculate the angle of the resultant deceleration with respect to the lateral axis of the vehicle during the crash event.[66] The time period of interest was determined to be 5 to 60 ms, because this represents the typical time from initial motion of the struck vehicle through peak loading on the near-side occupant.

A reference frame was used in which a pure left-to-right lateral impact was zero degrees and a pure frontal impact was 90 degrees. The mean angles over the time period of interest for the ten vehicles ranged from 4 to 15 degrees, while the angle at any specific time ranged from −8 to 22 degrees across the ten vehicles. From these ranges, the agency decided to perform tests within a range of 0 to 20 degrees. These tests (at 0, 10, 15 and 20 degrees) were performed in an effort to evaluate the effect of the test buck's impact angle on dummy kinematics and injury responses. Based on the tests and on the average impact angle computed from the vehicle right rear sill velocities of MDB-to-vehicle crash tests, we selected a 10 degree impact angle as the most appropriate. NHTSA also conducted sled tests at different impact angles (0, 5, 10, and 20 degrees) using the Takata sled procedure to compare them to four MDB crash tests (discussed in a later section) performed using the Q3s dummy restrained in a CRS in the rear seat behind the driver. We found that a 10 degree impact angle on the sled test produced dummy responses closer to those measured by the ATD in the same CRS in the four MDB crash tests than the other impact angles.[67]

b. Rear Seat Environment Parameters

The proposed SISA consists of a sliding ''vehicle'' seat mounted to a rail system, along with a side door structure rigidly mounted to the sled buck

[66] Sullivan et al., 2009.

[67] Sullivan et al. (2009).

structure. To ensure that the sliding ''vehicle'' seat and side door would be representative of today's passenger vehicles, NHTSA conducted a vehicle survey to examine the geometry and contact characteristics of present day vehicle rear seats, to select the geometry and material characteristics that are necessary to replicate the physical environment of a typical rear seat in a side impact test. NHTSA identified the following rear seat features to replicate in the SISA: Rear seat geometry, rear seat cushion stiffness, and door shape (height of window, armrest thickness, door padding). More information about the vehicle survey can be found in a technical report that has been placed in the docket.

NHTSA also performed a series of sled tests to undertake a sensitivity analysis to better understand the effect of the sled test parameters and sled system configuration on dummy responses. The parameters evaluated were the seat cushion stiffness, door padding stiffness, presence of armrest, and window sill height. Details of the findings of the sensitivity analysis are discussed in Sullivan (2011), *supra,* and are summarized in the discussion below and in the docketed technical report.

1. Rear Seat Cushion Stiffness

In the vehicle survey, NHTSA measured the rear seat cushion stiffness of 13 vehicles, as well as the seat cushion stiffness of the seat cushions used in FMVSS No. 213, ECE R.44, and the NPACS programs.[68] The 13 vehicles selected were a mix of different vehicle manufacturers and different vehicle types (passenger cars, sport utility vehicles, etc.). The NPACS cushion foam was evaluated even though the NPACS rating system is only in draft form, because European efforts to upgrade ECE R.44 are considering the use of NPACS foam for the seat cushion.[69]

Measurements were taken at various locations on the rear seat cushion of vehicles in quasi-static compression tests using an indentation plate.[70] The FMVSS No. 213 foam was found to be softer than all the vehicle seat foams surveyed. The NPACS and ECE R.44 foams were stiffer than the FMVSS No. 213 foam, and more representative of the vehicles selected in this study.

In NHTSA's sensitivity analysis (see docketed technical report), we conducted sled tests with the Q3s to determine the effect of the seat cushion stiffness on dummy readings and CRS performance. Three CRS models were evaluated (Evenflo Triumph Advance DLX, Maxi-Cosi Priori XP and Graco SafeSeat Step2/Cozy Cline). The FMVSS No. 213 foam (with vinyl cover) and the ECE R.44 foam (with cloth cover) were used in this series of tests.[71] The results of the evaluation indicated that seat cushion foam stiffness had little effect on the dummy responses in these side impact tests.

Based on the above, the agency is proposing that the seat cushion foam for the SISA have the stiffness of the ECE R.44 seat foam, given that the ECE R.44 foam is more representative of the current rear seats in the vehicle fleet than the FMVSS No. 213 cushion foam. The agency prefers the ECE R.44 foam over that of the NPACS foam because, although the two foams are similar in stiffness, the ECE R.44 foam is more readily available than the NPACS foam. Further, the NPACS procedure is still in draft form.

The agency has initiated a research program to evaluate how the test parameters of the FMVSS No. 213 frontal sled test should be updated to reflect any significant real world developments. Within this program, the agency's plans include developing a test bench seat with seat cushion stiffness that has characteristics of seat cushions in recent vehicle models.[72] The agency will consider, to the extent possible under the timeframes for the research and rulemaking programs, the merits of using this updated seat cushion foam in the side impact sled. In the meantime, the agency is currently proposing to use the ECE R.44 foam for the sliding bench seat in the side impact sled. While our current test data indicate that seat cushion foam stiffness has little effect on the dummy responses in this side impact test procedure, we request comment on the proposed seat cushion foam and seat cushion assembly.

2. Rear Seat Door Stiffness

To determine the sled door padding characteristics, we impact-tested eight vehicle doors using a Free Motion Head (FMH) (see the docketed technical report and Sullivan (2011)). The FMH impact tests consisted of a 3.5 kg (7.7 lb) child head form launched horizontally towards the door at 24 and 32 km/h (15 and 20 mph, respectively), which are the FMH impact test velocities used to test vehicle interiors in FMVSS No. 201, ''Occupant protection in interior impact'' (49 CFR 571.201).

The FMH was directed at different locations on the door where the head of the dummy was most likely to make contact. That is, the impact points were selected based on the center of gravity and top of the head locations of the Hybrid III (HIII) 3 YO child ATD, the HIII 6 YO child ATD, and the HIII 10 YO child ATD seated on the vehicle seat. The impact points were determined by tracking the location of head-to-door contact of these different sized ATDs when seated in the rear seat of a vehicle and leaned forward and laterally towards the door. Based on the results from the FMH tests of the eight vehicles, three foams (described as ''stiff,'' ''average'' and ''soft'' foams) spanning the range of vehicle door padding FMH impact characteristics were selected.

In NHTSA's sensitivity analysis (see technical report), we conducted a series of sled tests with the Q3s to assess the effect of door padding stiffness on the performance of the two CRS models (Graco Safe Seat Step 2 and Maxi Cosi Priori XP). ''Soft'' (United Foam # 2), ''average'' (Dow Ethafoam 220), and ''stiff'' (United Foam # 4) foam were used in 51 mm (2 in) thick padding applied to the simulated door wall panel.[73] Results showed that the door stiffness had little effect on dummy performance. The door stiffness had little effect on the Q3s dummy's HIC_{15} and chest deflection results, when restrained in the Graco SafeSeat Step 2 and Maxi-Cosi Priori XP seats, for the soft, average, and stiff door panel foams.

Given the above information, the agency is proposing that the door of the SISA comprise of 51 mm (2 in) thick foam of ''average'' stiffness, so as to be representative of the average rear seat characteristics. In addition, the foam material with average stiffness (Dow Ethafoam 220) is of lower cost compared to the other foams, is relatively easy to obtain commercially, and is relatively fungible, in that other materials with similar physical properties could easily be used in its place.

3. Rear Seat Environment Geometry

The agency surveyed 2010 model year passenger vehicles (passenger cars, SUVs, vans) to obtain dimensional

[68] Id.

[69] LeClaire, M., and Cheung, G., ''NPACS (New Programme for Assessment of Child restraint Systems, Phase 1 Final Report'' PPAD 9/33/128, Prepared for the Department of Transport, U.K., March 2006.

[70] Id.

[71] Sullivan et al. (2011).

[72] See also MAP–21, § 31501(b), ''Frontal Impact Test Parameters.'' Paragraph (1) states that, not later than 2 years after the date of enactment of MAP–21 (July 6, 2012), the Secretary shall commence a rulemaking proceeding to amend the standard seat assembly specifications under FMVSS No. 213 ''to better simulate a single representative motor vehicle rear seat.'' Paragraph (2) states that not later than 4 years after the date of enactment of MAP–21, the Secretary shall issue a final rule pursuant to paragraph (1).

[73] Sullivan et al. (2009).

characteristics of rear seat attributes that could affect the performance of a CRS in the rear seat compartment.[74] These attributes were: Seat back angle, seat pan angle, beltline height (from approximately the vehicle seat bight (i.e., the intersection of the seat cushion and the seat back)), height of the top of the armrest (from the seat bight), and armrest thickness (protrusion of the armrest from the door).[75] The agency measured the seat and door geometry, position, and dimensions using a Seat Geometry Measuring Fixture (SGMF).[76] The SGMF was positioned on the centerline of a rear seating position and measurements were made with respect to point A (center of the hinge) of the SGMF.

Seat Back and Seat Pan Angle

The seat back angle of the vehicles surveyed ranged from 9 to 28 degrees. The average was 20 degrees with a standard deviation of 4 degrees (see Sullivan et. al (2011) and technical report). The seat pan angle (the angle of the seat cushion to the horizontal) ranged from 7 to 23 degrees. The average seat pan angle was 13 degrees with a standard deviation of 4 degrees.

The original Takata buck had a seat back angle and a seat pan angle of 20 and 15 degrees, respectively. Both the seat back angle and the seat pan angle are well within the ranges found in NHTSA's vehicle survey, and are the same as the ECE R.44 bench seat. Therefore, these angles were adopted in the SISA.

Armrest Thickness

The armrest thickness (protrusion of armrest in the door) for the 25 vehicles surveyed ranged from 25 mm to 105 mm (1 in to 4.1 in). One vehicle was at or below 50 mm (2.1 in), 8 vehicles were between 51 mm and 70 mm (2.0 in and 2.75 in), 10 vehicles were between 71 mm and 80 mm (2.75 in and 3.1 in), and 5 vehicles were above 81 mm (3.1 in). One vehicle had no armrest.

The armrest thickness selected for the SISA sled system consists of a 64 mm (2.5 in) thick padding material attached to a 51 mm (2 in) thick door panel. The 64 mm (2.5 in) thickness of the armrest foam is within the range of armrest thickness from surveyed vehicles.

Beltline and Armrest Heights

The beltline (window sill) and top of the armrest heights of the 24 surveyed vehicles were measured using the SGMF with respect to point A (center of the hinge of the SGMF) (see Figure 4).

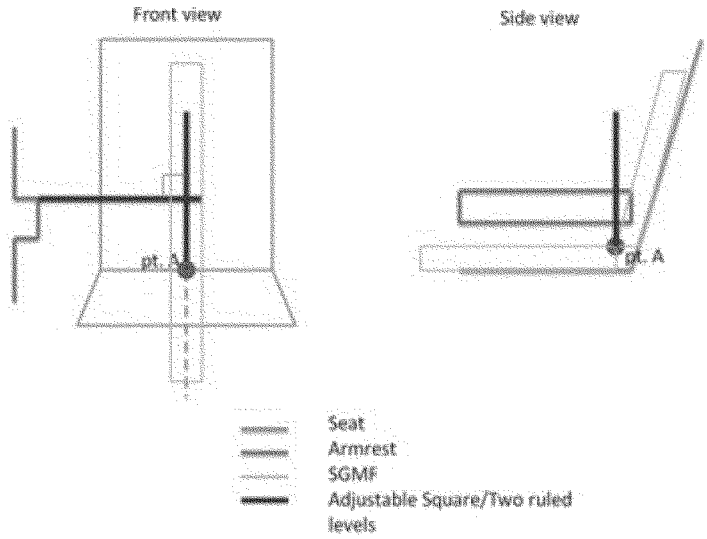

Figure 4 - Tool Placement when measuring lateral and vertical distance of armrest and windowsill to point A.

The survey showed that the beltline heights varied between 413 mm and 566 mm (16.2 in and 22.2 in) in height and the armrest heights varied between 122 mm and 349 mm (4.8 in and 13.7 in) with respect to point A. A 489 mm (19.2 in) beltline height and a 238 mm (9.3 in) armrest height were found to be about the median values of the vehicles' ranges. A 494 mm (19.4 in) beltline height and a 229 mm (9 in) armrest height were found to be about the average values for the vehicles surveyed.

In NHTSA's sensitivity analysis, we conducted sled tests of forward-facing and rear-facing CRS models and the Q3s dummy with the beltline height at 479 mm (18.8 in) and at 500 mm (19.6 in) to determine the effect of beltline height on dummy responses. Only 2 CRS models showed slightly lower HIC_{15} values with the raised windowsill. Of the 7 CRS models tested with both beltline heights, chest deflection decreased when the beltline height was raised from 479 mm to 500 mm (18.8 to 19.6 in). Only one CRS model resulted in higher chest deflections when the windowsill was raised, and 2 CRSs had chest deflections that were almost unchanged.

Tests with the CRABI dummy in rear-facing CRSs showed that the different beltline heights did not affect dummy responses. We believe this was due to the fact that most rear-facing CRSs designed for smaller children position

[74] See Aram et al., ''Vehicle Rear Seat Study—Technical Report, NHTSA, 2013,'' which is in the docket for this NPRM.

[75] The original Takata sled buck did not include an armrest. We modified the sled buck to include an armrest.

[76] The SGMF was fabricated using two 2 × 4 wood blocks (600 mm × 88 mm × 38 mm) and a three inch hinge. Photographs of the SGMF are in the report by Aram et al. (2013), *supra.*

the head lower (mostly below the beltline) and therefore the increased height (at 500 mm or 19.6 in) did not affect the outcome.

Only 6 vehicles (of the 24 surveyed) had a windowsill below the 479 mm (18.8 in) and were considered less representative of the vehicle fleet. Our test results indicated that with the Q3s seated higher above the beltline, HIC_{15} values were lower than when the ATD's head was lower than the beltline. In order to ensure that the side impact test is sufficiently stringent to account for vehicle beltlines that are higher than the average value, we are proposing a beltline height of 500 mm (19.6 in) for the SISA. Although this value is slightly higher than the average beltline height, it is well within the range of beltline heights for the vehicles surveyed.

The dimensions of the SISA door structure and armrest design and placement relative to the test platform are shown in Figure 5 below.

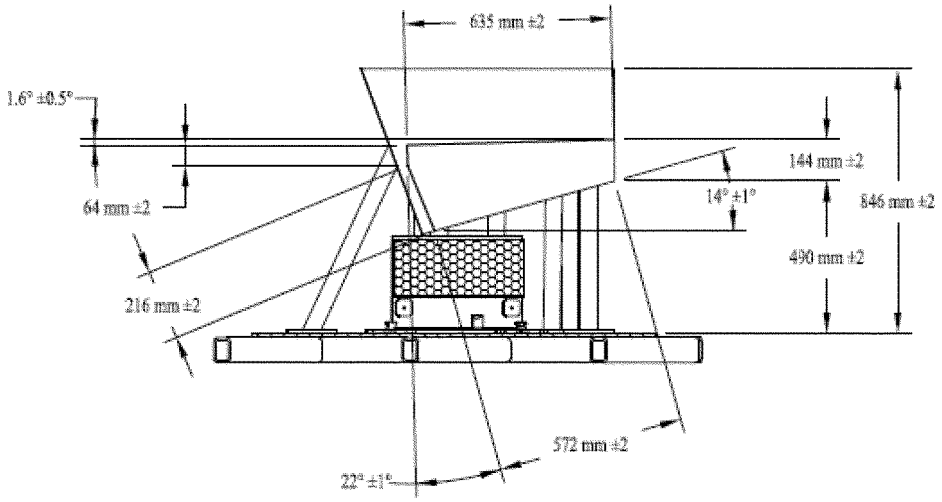

Figure 5. SISA Door and Armrest Dimensions

Armrest Stiffness

To have a door panel/armrest configuration in the SISA test buck with similar stiffness characteristics to those observed in the surveyed vehicles, we conducted FMH tests on various padding material combinations. Four of the 8 vehicles previously tested with the FMH to assess door panel force displacement characteristics also had impacts to the armrests to determine their armrest characteristics. The energy versus displacement curves of FMH impacts to the armrests indicated that the average armrest stiffness in the vehicles surveyed could be replicated on the SISA using 64 mm (2.5 in) of the foam we identified as ''stiff'' foam (United Foam #4) (see ''Rear Seat Door Stiffness'' section, *supra*) attached on top of 51 mm (2 in) of the ''average'' foam padding the door structure. *Id.*

In NHTSA's sensitivity analysis, we conducted sled tests with the Maxi Cosi Priori and the Graco Safe Seat 2 with the armrest/door configuration. The results of these tests were compared to those from door padding-only sled tests and from the actual vehicle tests. We found that the addition of the armrest tended to reduce the HIC_{15} values of the Q3s due to the early interaction of the ATD's pelvis resulting from the added armrest. Chest displacements also tended to be lower with the armrest present, although not as pronounced as for HIC_{15}.

NHTSA is proposing that the armrest/door configuration for the SISA consist of the 51 mm (2 in) ''average'' stiffness foam padding (Ethafoam 220) on the door and a 64 mm (2.5 in) ''stiff'' foam (United Foam #4) for the armrest. This configuration appears to be representative of the rear seat environment, and dummy responses with this armrest/door configuration were similar to those seen in vehicle crash tests (see Dynamic Validation of Sled Test section, *infra*).[77] Further, the stiff United Foam #4 also has a thickness of 64 mm (2.5 in) which is within the range of armrest thicknesses from surveyed vehicles.

Seating Position

The SISA bench seat consists of a single seating position representing a rear outboard seating position for simulating a near-side impact. The centerline of this outboard seating position is at a distance of 300 mm (11.8 in) measured laterally from the edge of the bench seat closest to the impacting door. NHTSA is proposing to install the child restraint centered on the SISA bench seating position. In addition, NHTSA is proposing that the front face of the armrest on the door be approximately 32 mm from the edge of the bench seat towards the child restraint system at the time the door assembly interacts with the SISA bench seat structure. Because of the prescribed position of the armrest (32 mm from the edge of the seat) and the CRS (centered 300 mm from the edge of the seat) at the time the door first interacts with the bench seat structure, the intruding door will contact CRSs that are wider earlier in the event than those that are narrower. This would result in higher door impact velocity to wide CRSs than to narrow CRSs. We believe this is representative of how different CRS designs will perform in a specific vehicle. However, we are requesting comment on whether the distance of the front face of the armrest from the edge of the seat at the time the sliding seat starts to accelerate should be kept constant or should be varied such that all CRSs, regardless of their width, contact the impacting door at the same time and with the same initial impact speed.

LATCH

We propose that the SISA be equipped with LATCH anchorages that are symmetrically located on either side of the centerline of this simulated

[77] Sullivan et al. (2011).

''outboard seating position'' of the SISA bench seat. The location of the top tether anchorage would be on the lower rear frame of the seat (similar to the typical location of a tether anchorage in captain's seats in minivans). The LATCH anchorages are shown in the drawings that have been placed in the docket for today's NPRM.

FMVSS No. 213 currently requires CRSs to be capable of being secured to a vehicle seat with the LATCH system,[78] and to meet the frontal crash requirements of the standard when using the LATCH system. Today's NPRM proposes that CRSs covered in this proposal, other than belt-positioning seats, must meet the side impact performance requirements when attached to the SISA with the lower LATCH attachments. We propose to test belt-positioning seats to the side impact protection requirements with Type II (lap and shoulder) belts.

We propose that the child restraint's top tether be attached during the side impact test when testing forward-facing CRSs that provide a tether. We are requesting comment on whether the standard should also require testing without the top tether attached for these forward-facing CRSs.

Comments are also requested on whether the standard should require CRSs to meet the proposed side impact requirements when attached to the SISA with a belt system, and on whether the belt system should be a Type I (lap) or a Type II (lap and shoulder) belt system.[79] The original Takata sled had a Type II belt system; NHTSA modified the test bench seat to incorporate child restraint anchorages and also modified the location of the Type II belt anchorages based on NHTSA's survey of vehicle rear seat geometry.[80] Preliminary tests conducted with CRSs attached to the sliding seat using the Type II belt system showed similar performance metrics to that obtained when the CRSs were attached using the child restraint anchorage system, suggesting that the method of CRS attachment has minimal effect on performance.

c. Dynamic Validation of the Sled Test

To determine if the sled test with the selected parameters satisfactorily simulates a small passenger vehicle side impact crash test, NHTSA conducted four FMVSS No. 214 MDB tests of a 2008 Nissan Sentra and 2008 Nissan Versa using the Q3s dummy and two CRS models (see Table 10). For the first test of the Sentra (Test #6634), the impact location was that specified in FMVSS No. 214. (In an FMVSS No. 214 MDB test, the MDB is positioned such that in a left side impact, the MDB's left forward edge (corner) impacts the struck vehicle 940 mm (37 inches) forward of the mid-point of the wheelbase.) In the remaining three tests, the impact location was moved 229 mm (9 in) rearward so that the MDB engaged most of the rear door instead of the front door, to provide for more direct contact of the MDB with the CRS. The side curtain air bags were disabled from the vehicle tests to allow for a direct comparison to the sled. (Sullivan (2009).)

TABLE 10—VEHICLE TEST SETUPS

Test No.	Vehicle model	Model class	Impact location	CRS	Dummy
6634	Sentra	Light PV	214	Graco Safe Seat Step 2	Q3s.
6635	Sentra	Light PV	214–229mm to rear	Graco Safe Seat Step 2	Q3s.
6636	Versa	Compact PV	214–229mm to rear	Graco Safe Seat Step 2	Q3s.
6637	Versa	Compact PV	214–229mm to rear	Maxi-Cosi Priori	Q3s.

Table 11 shows data from the vehicle tests. The technical report docketed with this NPRM presents a detailed analysis of these data. The sled type side impact test with a 10 degree angle, an armrest and a beltline height of 479 mm (18.8 in)[81] provided good representation of the vehicle, dummy, and CRS kinematics observed in the vehicle tests. In both sled and vehicle tests, the intruding door and armrest first engages the lower part of the CRS, causing the bottom of the CRS to move away from the door. This results in the top of the CRS tilting towards the door and contacting it. The child dummy is first engaged by the CRS through the pelvis, followed by the torso and lastly the head. The dummy's head rotates forward when it contacts the side wing of the CRS.

TABLE 11—VEHICLE AND SLED TESTS WITH THE GRACO SAFE SEAT STEP 2

Test No.	Vehicle model/sled test	HIC_{15}	Chest displacement (mm)	Neck tension newtons (N)	Spine Y acceleration (g)	Pelvic Y acceleration (g)
6634	Sentra	521	17	1054	89	71
6635	Sentra	518	12	1244	85	79
6636	Versa	414	14	1235	91	106
6904	Sled Test (10 degrees, Armrest and 479 mm beltline).	634	25	944	91	83
6905	Sled Test (10 degrees, Armrest and 479 mm beltline).	594	25	999	93	75

[78] See S5.9, FMVSS No. 213. Excluded from this requirement are car beds, child harnesses, and belt-positioning seats.

[79] FMVSS No. 213 currently does not use a Type II belt system. The agency tests CRSs for compliance with the frontal crash protection requirements using LATCH and a Type I (lap) belt system. NHTSA is researching the merits of changing the belt system on the standard seat assembly to Type II belts.

[80] Aram, et al., ''Vehicle Rear Seat Study—Technical Report, NHTSA, 2013,'' *supra.*

[81] The agency did not perform a sled test with a window sill height of 500 mm (19.6 in) with the Graco Safe Seat Step 2 or the Maxi Cosi Priori CRS models (tested in the vehicle crash tests), therefore, no dynamic comparison analysis was done. Based on the sensitivity analysis results with the two different window sill heights, the agency expects the magnitude of the head acceleration to be slightly higher but the timing and profile of the head and pelvis accelerations should be very similar to the tests with a window sill height of 479 mm (18.8 in).

The Q3s dummy responses in the modified Takata sled tests were compared to the three vehicle side impact crash tests. Peak pelvic and spine accelerations were similar but the magnitude of HIC_{15} and chest displacement in the sled tests were slightly higher than those in the vehicle tests. The differences in magnitude can be attributed to the differences in vehicle rear seat geometry and to that of the sled seat. The geometry of the sled seat was based on average characteristics of the vehicle fleet, and not based on the Nissan Sentra. In addition, differences in the arm position of the dummy in the vehicle and sled tests may have contributed to the higher chest deflection in the sled tests. The effect of the arm position on chest deflection is discussed in more detail in a later section of this preamble.

XII. Proposed Dynamic Performance

A 3 YO child test dummy and a 12 MO infant dummy have been tentatively selected for testing CRSs under the proposed side impact requirements.

a. Q3s Test Dummy

The agency has selected the Q3s dummy, representing a 3 YO child, for testing CRSs designed for children in a weight range that includes children weighing from 10 kg to 18 kg (22 lb to 40 lb). The 18 kg (40 lb) weight cut off would be identical to that of the frontal collision requirements of FMVSS No. 213 (see S7). For the frontal crash requirements, a Hybrid III 3 YO child ATD is used to test CRSs recommended for children weighing from 10 kg to 18 kg (22 lb to 40 lb). The agency tentatively concludes that the Q3s, weighing 14.5 kg (32 lb), would suitably represent children in the 10 kg to 18 kg (22 lb to 40 lb) range for side impact testing. The anthropometry of the Q3 (and the side impact adaptation Q3s) is based on the Child Anthropometry Database (CANDAT) for a 3 YO child compiled by the Netherlands Organization for Applied Scientific Research (TNO). CANDAT includes various characteristic dimensions and weights of children of different ages obtained from different regions in the world including United States, Europe, and Japan.

The Q3s dummy is a three-year-old child crash test dummy built on the platform of the standard Q3 dummy series with enhanced lateral biofidelity, durability and additional instrumentation for side impact testing. The Q3s dummy features a new head and a neck that has biofidelic lateral, and frontal performance. The ATD also has a deformable shoulder with shoulder deflection measurement capabilities, a new arm with improved flesh characteristics, a laterally compliant chest and a pelvis with improved upper leg flesh, floating hip cups, and a pubic load transducer.[82]

The agency began evaluating the Q3s in 2002. The evaluation has demonstrated good biofidelity, repeatability, reproducibility, and durability. We have tentatively selected the Q3s dummy for this NPRM because it is commercially available, and has shown to be durable and biofidelic for the intended application in the proposed FMVSS No. 213 side impact tests. Further discussion of the Q3s can be found in the NPRM proposing incorporation of the Q3s test dummy into 49 CFR Part 572, ''Anthropomorphic test devices,'' previously published.

The Q3s dummy accepts different types of instrumentation, including accelerometers and load cells among others. The instrumentation we propose using with the ATD are three uni-axial accelerometers at the head center of gravity (C.G.) and an InfraRed Telescoping Rod for Assessment of Chest Compression (IR–TRACC) in the thorax for measuring lateral chest deflection. The IR–TRACC is a deformation measurement tool that consists of an infrared LED emitter and an infrared phototransistor detector. The emitter and detector are enclosed at each end of a telescoping tube. The chest deformation is determined from the irradiance measured by the detector, which is inversely proportional to the distance of the detector from the emitter. The IR–TRACC is standard instrumentation in the Q3s dummy.

The enhanced biofidelity and instrumentation capabilities of the Q3s make it our preferred option for use in FMVSS No. 213. NHTSA has considered an alternative 3 YO child ATD, based on the Hybrid III design, for use in this NPRM. Our reasons for preferring the Q3s are discussed in the 49 CFR Part 572 NPRM.[83] We request comments on the alternative of using the Hybrid III-based 3 YO ATD instead of the Q3s.

Injury Criteria for Use With the Q3s

The agency analyzed NASS–CDS data average annual estimates (1995–2009) for AIS 2+ injuries to children 0 to 12 YO in rear seats. Data showed that the most common AIS 2+ injuries among children restrained in side impacts were to the head and face (55 percent), torso (chest and abdomen—29 percent), and upper and lower extremities (13 percent). Given the high frequency of head and thoracic injuries to children involved in side crashes reported in these data and in multiple studies,[84] the injury criteria proposed in this NPRM focus on the child occupant's head and thorax.

The agency is proposing to address the potential for head injuries by setting a maximum on the HIC value measured by the Q3s in the side impact test. HIC is used in FMVSS No. 213 and in all other crashworthiness FMVSSs that protect against adult and child head injury. However, while the current FMVSS No. 213 frontal impact requirement specifies an injury assessment reference value (IARV) of 1,000 measured in a 36 ms timeframe (36 ms for integrating head acceleration) (HIC_{36} = 1,000), we are proposing a HIC limit of 570 measured in a 15 ms timeframe (15 ms duration for integrating head resultant acceleration) (HIC_{15} = 570) when using the Q3s dummy in the side impact sled test. FMVSS No. 208, ''Occupant crash protection,'' uses HIC_{15} = 570 for the Hybrid III 3 YO dummy.[85]

We recognize that FMVSS No. 213's frontal impact performance requirement specifies a HIC_{36} IARV of 1,000 when using the CRABI and the Hybrid III 3 and 6 YO dummies in the standard's frontal impact test.[86] We also recognize that in a 2003 rulemaking responding to the TREAD Act, NHTSA considered adopting the FMVSS No. 208 scaled IARVs in FMVSS No. 213 but decided against doing so (68 FR 37620, 37649; June 24, 2003). CRSs were already providing high levels of crash performance in the field, yet frontal sled test data indicated that CRSs would not

[82] Carlson, M., Burleigh, M., Barnes, A., Waagmeester, K., van Ratingen, M. ''Q3s 3 Year Old Side Impact Dummy Development,'' 20th International Conference on the Enhanced Safety of Vehicles, Paper No. 07–0205, 2007. *http://www-nrd.nhtsa.dot.gov/pdf/esv/esv20/07-0205-O.pdf.* Last accessed on June 11, 2012.

[83] NHTSA found that the two dummies' heads and necks provided nearly equivalent biofidelity; however, in all other biofidelity test conditions—shoulder, thorax and pelvis—the Q3s exhibited significant advantages relative to the alternative HIII 3–YO design.

[84] See Craig, M., ''Q3s Injury Criteria,'' which is in the docket for this NPRM.

[85] In developing this NPRM, NHTSA has considered alternative HIC_{15} requirements of 400 and 800. The PRIA provides an assessment of benefits and costs of the HIC_{15} = 400 and 800 alternatives.

[86] The agency did not adopt the use of HIC as an injury measure for the Hybrid III 10–YO child dummy (HIII–10C) dummy in FMVSS No. 213 tests because CRSs tested with the HIII–10C dummy can produce high HIC values as a result of hard chin-to-chest contact, indicating an unacceptable risk of head injury, even though head injuries due to chin-to-chest contact are not occurring in the real world. (76 FR 11626; February 27, 2012.)

meet the FMVSS No. 208 scaled IARV limits. It was not known what modifications to CRSs were necessary for the restraints to meet the FMVSS No. 208 limits in the frontal configuration. In addition to questions about the practicability of modifying CRSs to meet the proposed IARVs and the safety need for such modifications, the agency decided that the cost increases resulting from the redesign—and the possible negative effect the cost increases could have on consumers' use of CRSs—were not justified. *Id.*

We tentatively conclude that today's proposed side impact test differs from FMVSS No. 213's frontal impact test such that the FMVSS No. 208 scaled IARV of HIC_{15} = 570 is reasonable for today's proposal. FMVSS No. 213's frontal impact test evaluates the performance of CRSs on a frontal impact sled buck that does not have a structure (representing a front seat) forward of the tested CRS on the bench seat. In contrast, in today's proposed side impact test, the test environment is set up so that ATD head contact with the CRS and the door is probable. Injurious contacts (such as head-to-door contacts) are of short duration (less than 15 ms) in this set-up and more appropriately addressed by HIC_{15} (15 millisecond duration for integrating head resultant acceleration) than HIC_{36}. For head impact accelerations with duration less than 15 ms, the computed value of HIC_{15} and HIC_{36} are generally equivalent. However, since the injury threshold level for HIC_{15} is 570 while that for HIC_{36} is 1,000, HIC_{15} is a more stringent requirement than HIC_{36} for short duration impacts and is better able to discern injurious impact events. On the other hand, for long duration accelerations without a pronounced peak such as those when the head does not contact any hard surfaces such as in the frontal FMVSS No. 213 test, the computed HIC_{15} value may be lower than the HIC_{36} value and the HIC_{36} computation may be a better representation of the overall head acceleration.

With regard to chest protection, the agency proposes a chest displacement IARV for the Q3s of 23 mm to evaluate CRS performance in a side environment. Mertz (2003) [87] presented lateral thoracic injury risk IARVs for deflection purely based on length-based scaling from adult cadaver/dummy response. Mertz suggested a limit of 23 mm for 3 YO lateral rib deflection. This was derived only through length-based scaling from the adult and represented roughly a 30 percent probability of AIS 3+ injury. This compared very well with length-based scaling of chest deflection data from 42 adult post-mortem human subject (PMHS) tests completed by the Medical College of Wisconsin (MCW) and published by Kuppa (2003).[88] This length-based scaling analysis of the MCW data is detailed in a technical report docketed along with this NPRM.[89] The results of that analysis found that a displacement of 23 mm represented a 33 percent risk of AIS 3+ injury. While Mertz and Craig used different and independent data sets, the rib deflection threshold at 30 percent risk of injury for the 3 YO child were similar and equal to 23 mm. Therefore, the agency proposes a chest displacement IARV of 23 mm to evaluate CRS performance with the Q3s.

NHTSA tentatively believes that there is not a need for a performance criterion that would prohibit head contact with the intruding door.[90] NHTSA's video analysis showed that 13 out of 19 forward-facing CRS models had head-to-door contact during the test. However, further analysis of the head acceleration time histories showed that the peak acceleration occurred before the head contacted the door. Six of the 13 models that had head-to-door contact had HIC_{15} values exceeding 570; these peak HIC_{15} values occurred prior to head contact with the door. This suggested that the peak head acceleration was the result of a previous impact, most likely the head contacting the side of the CRS at the time the CRS contacted the intruding door. (Four of the ''convertible'' CRS models tested in the forward-facing mode, were also tested in the rear-facing mode using the Q3s dummy; the results showed there was no head-to-door contact during these tests.)

Given that the head acceleration values computed during the time of head-to-door contact were lower than the peak head acceleration, we believe that the risk of head injury from head-to-door contacts for the 13 CRSs was much lower than the risk from the peak acceleration. For the above reasons, the agency has tentatively decided not to use a performance criterion based on head contact in tests with the Q3s dummy because HIC_{15} appears better able to discern between ''soft'' non-injurious contacts and ''hard'' injurious contacts, and thus would be a better predictor of head injury in the side impact test.

b. CRABI Dummy

The agency has tentatively selected the CRABI dummy (49 CFR Part 572, Subpart R) for testing CRSs designed to seat children in a weight range that includes weights up to 10 kg (22 lb). The 10 kg (22 lb) weight cut off would be identical to that of the frontal collision requirement of FMVSS No. 213 (see S7 of FMVSS No. 213), which specifies use of the CRABI to test CRSs recommended for children weighing from 5 kg to 10 kg (11 lb to 22 lb).

The CRABI was developed through the efforts of the Society of Automotive Engineers (SAE) Child Restraint Air Bag Interaction Task Force. The ATD is used in FMVSS No. 208 to test advanced air bag systems and in FMVSS No. 213.[91] The CRABI dummy is a frontal crash test dummy and is instrumented with head, neck and chest accelerometers. The CRABI represents a 12 MO infant. There is no infant test dummy available that is specially designed for side impact testing.

While the CRABI dummy is not a side impact dummy, the agency believes that it could be a useful tool to evaluate some aspects of CRS performance in side impacts. Children under 1 YO have the highest restraint use, so we believe that it is important for safety and for MAP–21 to evaluate the performance of the CRSs they use, even if the evaluation is limited to containment, structural integrity, and other related matters.

Performance Criteria for Use With the CRABI

NHTSA is proposing that the CRABI be used to measure head-to-door contact only, and not HIC_{15} or chest acceleration. We have concerns about the real world relevance of the HIC values measured during developmental side impact testing using the CRABI dummy. In 12 side tests performed with rear-facing CRSs using the CRABI dummy, nearly all of the CRSs exceeded the HIC_{15} injury threshold value of 390 (used in FMVSS No. 208). See Figure 6, below. Four ''convertible'' CRS models tested in rear-facing mode were also tested in forward-facing mode using the

[87] Mertz et al., ''Biomechanical and Scaling Bases for Frontal and Side Impact Injury Assessment Reference Values,'' 47th Stapp Car Crash Conference, 2003–22–0009, October 2003.

[88] Kuppa et al., ''Development of Side Impact Thoracic Injury Criteria and Their Application to the Modified ES–2 Dummy with Rib Extensions (ES–2re),'' 47th Stapp Car Crash Conference, October 2003.

[89] Craig, M., ''Q3s Injury Criteria,'' *supra.*

[90] Such a performance criterion for CRSs is currently being used in the Australian standard AS/NZS 1754, and the Australian CREP consumer information program.

[91] When the CRABI is used in the FMVSS No. 213 frontal impact test, CRSs must limit HIC_{36} to 1,000, chest g to 60 g, limit head excursion of the dummy, limit inclination of the restraint, have no injurious surfaces contactable by the ATD's head or torso, and maintain the CRS's structural integrity.

CRABI dummy and in these tests, 2 of the 4 CRSs exceeded the 390 HIC_{15} injury threshold. Tests with the CRABI showed a high rate of HIC_{15} failure, yet field experience of rear-facing seats indicate that the CRSs are very safe in side impacts and provide 5 times more protection against serious injury than forward-facing seats in side impacts.[92]

We hypothesize that a reason for the results using HIC_{15} as a performance criterion is that the CRABI dummy's shoulder and neck are not designed for lateral loading and this may influence head kinematics prior to contact with the CRS/door. Additionally, the CRABI head does not meet lateral biofidelity standards. Therefore, both the severity of the resulting head contacts and the response of the head to those contacts may not be representative of the real world.

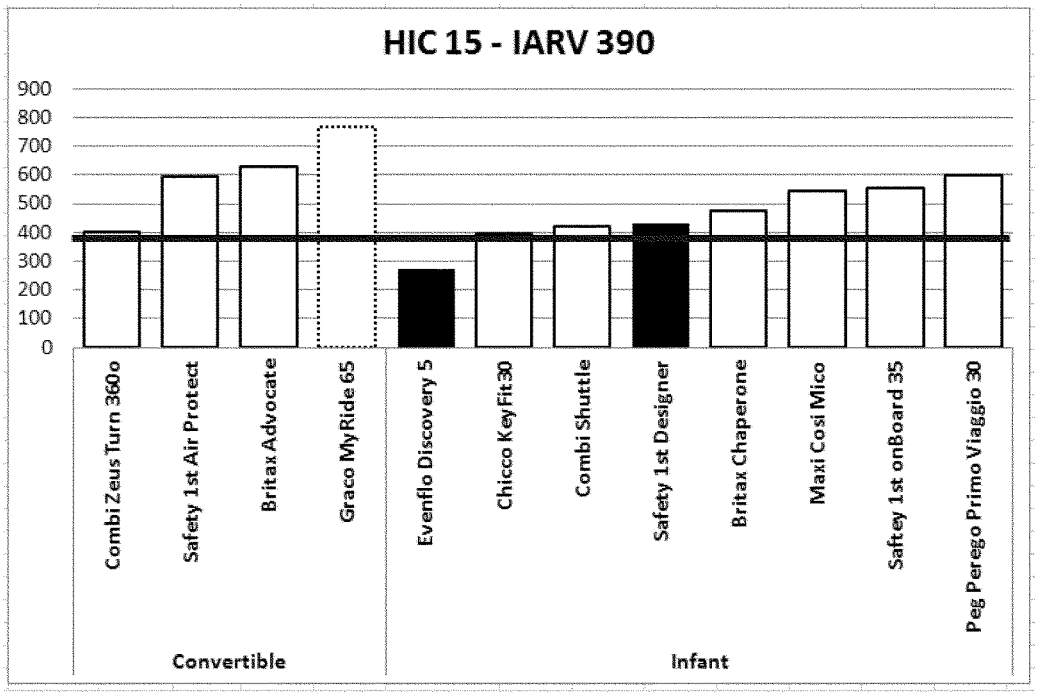

Figure 6 – HIC_{15} Values in Tests with CRABI Dummy in Rear Facing CRSs (Solid Black Outline=good side coverage and padding, Dashed Black Outline=good side coverage or padding, Solid Black=poor side coverage and padding)

On the other hand, we tentatively believe that the CRABI dummy would be suitable and should be used for assessing safety risks related to a CRS's ability to limit head-to-door contact in side crashes. Because the 0 to 12 MO age group has the highest restraint use of any age group, we seek to evaluate the performance of CRSs for this age group in side crashes even if such evaluation is limited to assessing head-to-door contact. Although the CRABI dummy may not be appropriate for use in measuring the potential for head injuries using HIC_{15}, the agency tentatively believes that the CRABI dummy could provide some other useful information evaluating child restraints for small children. That is, the CRABI could provide a worst-case assessment of injury risk in a side impact in terms of head-to-door contact. If the CRS were unable to prevent the ATD's head from contacting the door in the test, we believe such an outcome would be a reasonable indication of an unacceptable risk of head contact of children represented by the CRABI. Accordingly, NHTSA proposes head-to-door contact as a pass-fail criterion for assessing CRSs tested with the CRABI. We believe that this criterion will lead to improved side coverage. In our study, video analysis showed that 1 (Combi Shuttle) out of 12 rear-facing CRS models tested with the CRABI dummy had head-to-door contact during the test.

In addition, we tentatively believe that the CRABI dummy would be suitable and should be used for assessing a CRS's ability to maintain its structural integrity in side crashes when restraining 1 YO children. (Structural integrity requirements are discussed below.) We seek comment on the use of the CRABI dummy, and on the use of the proposed head-to-door contact pass-fail criterion.

c. Energy Absorption and Distribution

In the simulated side impact test, the CRS would be required to maintain system integrity when tested with the Q3s and with the CRABI. When a CRS is dynamically tested with the appropriate ATD, there could not be any complete separation of any load-bearing structural element of the CRS or any partial separation exposing surfaces with sharp edges that may contact an occupant. These requirements would reduce the likelihood that a child using the CRS would be injured by the collapse or disintegration of the system in a side crash or by contact with the interior of the passenger compartment or with components of the CRS.

Injury from contacting protrusions, such as the pointed ends of screws mounted in padding, would be prevented in a similar manner as that specified for the frontal crash test in FMVSS No. 213. The height of such

[92] Sherwood et al. (2007).

protrusions would be limited to not more than 9.5 mm (0.375 in) above any immediately adjacent surface. Also, contactable surfaces (surfaces contacted by the head or torso of the ATD) would not be permitted to have an edge with a radius of less than 6.35 mm (0.25 in), even under padding. Padding will compress in an impact and the load imposed on the child would be concentrated and potentially injurious.

XIII. Fleet Testing

a. Q3s Dummy

NHTSA tested 12 forward-facing and 5 rear-facing CRSs to estimate the performance of the fleet with the Q3s in the proposed test procedure.[93] Details of the test series are discussed in the technical report.

Applying the proposed injury criteria specified for the Q3s dummy (HIC_{15} ≤570, chest deflection ≤23 mm), the results of the fleet tests showed that the Q3s measured HIC_{15} greater than 570 in 7 of the 12 forward-facing CRSs tested. The Q3s measured chest deflection greater than 23 mm (0.91 in) in 3 of the 12 forward-facing CRSs tested. The ATD measured both HIC_{15} greater than 570 and chest deflection greater than 23 mm in 3 of the tests of the forward-facing CRSs.

For the 5 rear-facing CRSs tested, the results of the fleet tests showed that the Q3s measured HIC_{15} greater than 570 in 3 of the 5 rear-facing CRSs tested, and chest deflection greater than 23 mm (0.91 in) in 2 of the 5 tests. The ATD measured both HIC_{15} greater than 570 and chest deflection greater than 23 mm (0.91 in) in 1 of the 5 rear-facing CRSs tested. The test results are shown in Figure 7.

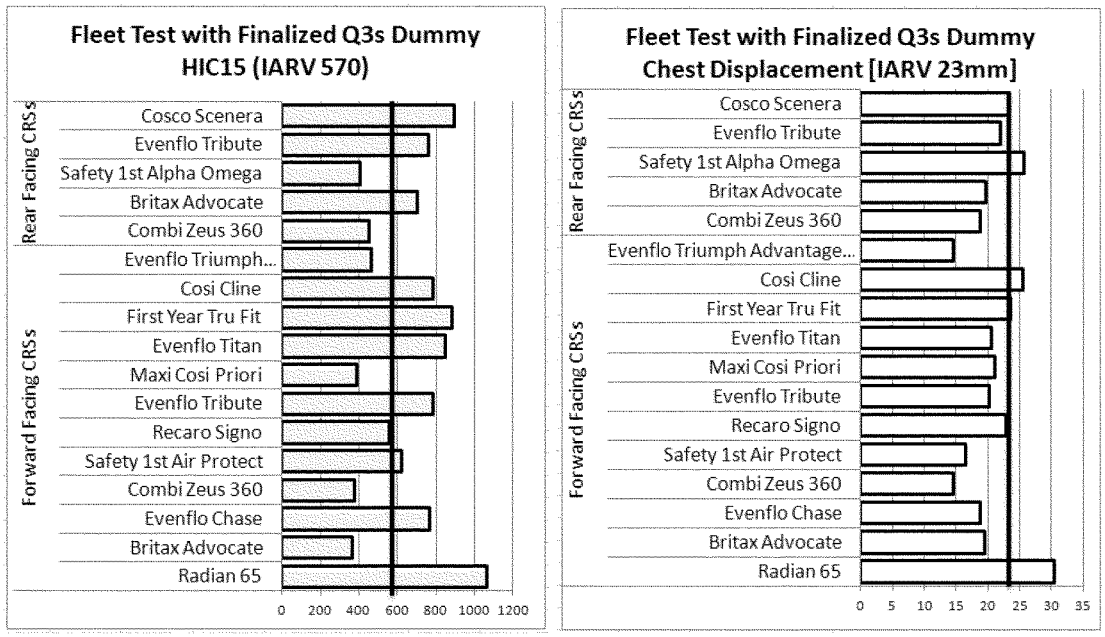

Figure 7 - Fleet Test Results: HIC_{15} (left) and Chest Displacement (right)

As to positioning the Q3s, we note that further analysis of the data showed that the chest displacements of the Q3s, tested in the same CRS model, were higher when the dummy's arm was positioned in line with the thorax, than when the arm was rotated upward exposing the thorax to direct contact with the intruding door. The agency is proposing an arm position at 25 degrees with respect to the thorax. The Q3s dummy's shoulder contains a detent to aid in positioning the arm at 25 degrees with respect to the thorax. We are requesting comment on the arm position.

When testing with the Q3s dummy in a rear-facing CRS, the legs of the dummy were extended upwards and rotated down until they were in contact with the SISA seat back. We are also requesting comment on the position of the Q3s dummy legs when testing rear-facing CRSs with this dummy.

b. CRABI Dummy

NHTSA tested 12 rear-facing CRSs to estimate the performance of the fleet with the CRABI. All tests were performed with the SISA mounted on a dynamic test platform so that the seat orientation reference line (SORL) of the seat was 10 degrees from the perpendicular direction of the test platform travel. CRSs were attached to the seat bench using LATCH. A 64 mm (2.5 in) thick armrest of ''stiff'' foam was added to the 50 mm (2 in) door panel foam. Twelve tests were performed with a window sill height at 479 mm (18.8 in). The test procedure proposed in today's NPRM was used for this fleet test except for the use of the NPACS foam instead of the ECE R.44 foam and a window sill height of 479 mm (18.8 in) instead of a 500 mm (19.6 in) window sill height. The NPACS foam was used on these series of tests, as previous testing appeared to show that cushion stiffness did not have a significant influence in the readings of the ATDs.

Three additional tests were performed with the beltline at 500 mm (19.6 in).[94]

[93] CRS models tested were a representative sample of seats available in the market.

[94] The seat cushion consisted of ECE R.44 foam.

Tests showed that the increase in window sill height did not significantly affect the performance of the rear-facing CRS using the CRABI. Models of CRSs for younger children generally positioned the head below a window sill height of 479 mm (18.8 in), so the CRSs will continue to be below the window sill when the window sill is at a height of 500 mm (19.6 in).

Using head-to-door contact as the performance criterion in the fleet tests, the results showed that the CRABI had head contact only with the Combi Shuttle model (1 out of 12 models). The Combi Shuttle model was retested and results were found to be repeatable. The test results are summarized in Table 12.

TABLE 12—FLEET TESTS RESULTS—CRABI

CRABI	Window sill @ 500 mm (19.6 in)	Window sill @ 479 mm (18.8 in)
Rear-facing	Contact	Contact
Combi Shuttle	* Contact	Contact.
Combi Shuttle	* Contact.	
Britax Advocate	No contact	No contact.
Combi Zeus 360		No contact.
Safety 1st Air Protect		No contact.
Graco My Ride		No contact.
Evenflo Discovery 5		No contact.
Chicco Key Fit 30		No contact.
Safety 1st Designer		No contact.
Britax Chaperone		No contact.
Maxi Cosi Mico		No contact.
Safety 1st OnBoard		No contact.
Peg Pereggo		No contact.

* Repeat tests to evaluate containment.

XIV. Countermeasure Assessment

The tests NHTSA performed during the development of the test procedure showed that some design characteristics such as side coverage (through head inserts or side structure/wings) can influence the values measured by the test dummy. As previously discussed, we examined each CRS with a seated Q3s dummy from a side view to evaluate if the head of the dummy was completely covered (obscured) by the side structure or wing insert or if it was partially visible. We rated designs as ''good'' (solid outline) when they had ''full'' side view coverage (dummy's head not visible, totally obscured). We considered the CRS designs as ''average'' (dashed outline) when 75 percent or more of the dummy's head was obscured by the side structure or wing insert. We considered a ''poor'' design (filled-in black) to be when less than 75 percent of the dummy's head was obscured by the side structure and/or head insert. Interestingly, test results showed that the CRSs with less side coverage (filled-in black) had the highest HIC_{15} values when tested with the beltline height at 479 mm (18.8 in) and at 500 mm (19.6 in). Results are depicted in Figures 8 and 9.

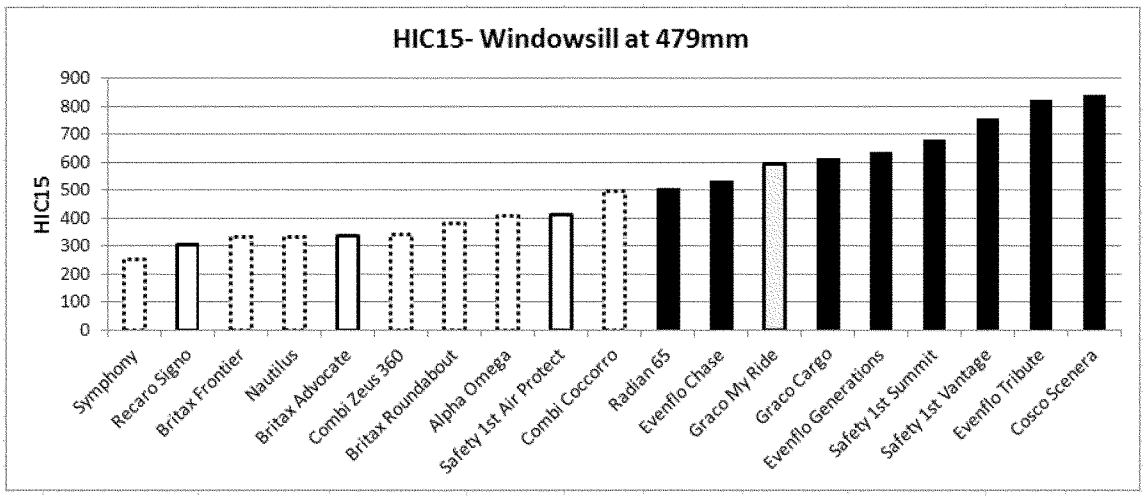

Figure 8 – HIC_{15} outcome for each CRS design @ 479 mm (18.8 in) windowsill (solid outline=good design, dashed outline=average design, filled-in black=poor design)

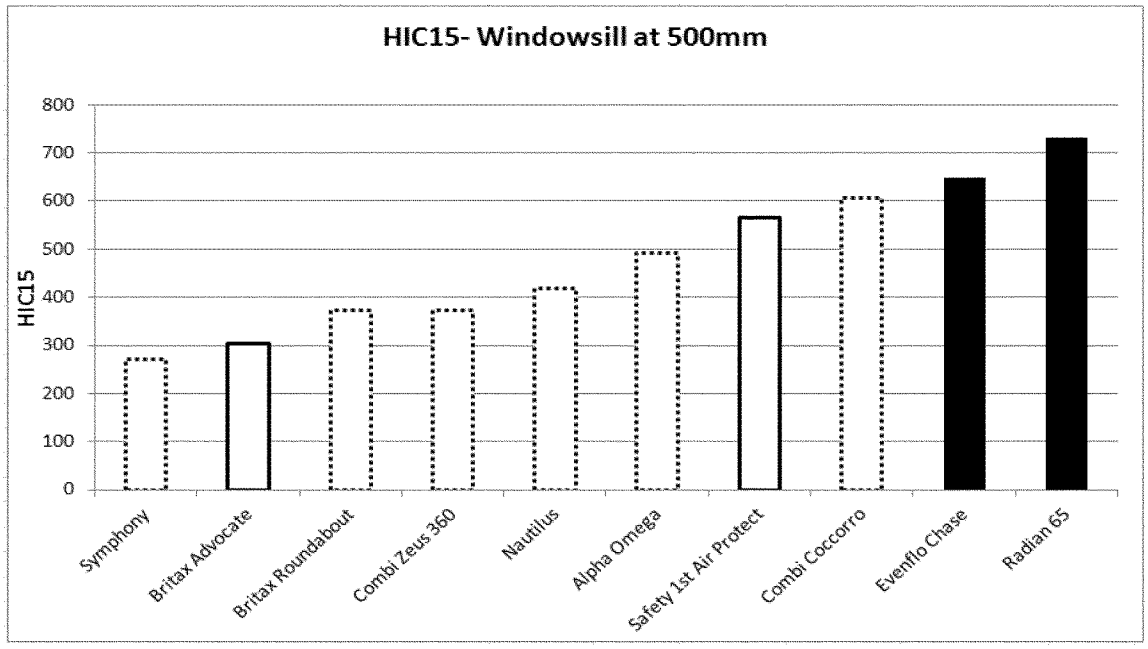

Figure 9 – HIC_{15} outcome for each CRS design @ 500 mm (19.6 in) windowsill (solid outline=good design, dashed outline=average design, filled-in black=poor design)

These test results indicate that ''good'' side coverage as a fundamental element of the child restraint design can help improve child restraint performance. This can be achieved by having more side structure with padding on the interior side and/or by adding padded head inserts.

We note that other features observed in the tested CRS models were a side air baffle (Britax Advocates) and an air pillow (Safety 1st Air Protect). According to the manufacturers of those CRSs, both the air baffle and the air pillow are supposed to absorb energy during impact. NHTSA was unable to verify these statements in our developmental program. We are interested in data showing that these or any other features are effective in improving CRS side impact performance.

XV. Petition Regarding Deceleration Sled System

Dorel Juvenile Group Petition for Rulemaking

On May 4, 2009, we received a petition from the Dorel Juvenile Group (DJG) requesting us to include in our side impact proposal a dynamic side impact test procedure that uses a deceleration sled, as an alternative or substitute to a procedure based on the acceleration sled. The petitioner noted that NHTSA's developmental work for this NPRM was done at VRTC, which uses an acceleration sled. Unlike an acceleration sled, a deceleration sled is first accelerated to a target velocity and then decelerated to a prescribed deceleration profile. The main event of interest occurs during the sled deceleration phase.

DJG stated that the primary reason the new side impact test procedure for CRSs should allow a deceleration sled as an option to the acceleration sled is because CRS manufacturers are familiar with the deceleration sled in the frontal impact context, and either have or have ready access to deceleration sled equipment. It further noted that the deceleration sled is less expensive to acquire and operate.

In its petition, DJG described work it conducted in collaboration with Kettering University to develop a CRS side impact sled test procedure using a deceleration sled (hereinafter referred to as the Dorel/Kettering test procedure). DJG's petition provided a description of the Dorel/Kettering test procedure and included preliminary sled test data simulating a New Car Assessment Program (NCAP) MDB side impact test.

According to DJG, the Dorel/Kettering test procedure employed a deceleration sled with a simulated door rigidly mounted to it (bullet sled) which impacted a target sled (bench seat with a CRS installed on it) that was initially stationary on a pair of low friction bearings, separate from the sled. In the procedure, the sled was accelerated to the impact velocity of the NCAP MDB barrier face. The petitioner stated that the sled decelerator was tuned to match the MDB deceleration profile. The target sled was positioned such that contact of the honeycomb on the target sled with the door structure was coincident with the initiation of sled deceleration. The characteristics of the honeycomb attached to the target sled were selected such that its crushing resulted in the desired target sled acceleration profile (acceleration profile of the impacted vehicle in a side NCAP test).

DJG provided data from four baseline sled tests, using a Hybrid III 3 YO child dummy with a modified neck (HIII–3Cs) in a CRS attached to the target sled, which were conducted to establish test parameters such as the bullet and target sled velocities. DJG also presented results to demonstrate the consistency and accuracy of the bullet and target sled velocities. In addition, DJG conducted a sensitivity analysis of various test parameters and said that the only parameter affecting the target sled was the honeycomb crushable area.

DJG stated that it later conducted sled tests with the HIII–3Cs dummy in a Maxi Cosi Priori and a Safety 1st 3-in-1 forward-facing child restraint and compared the results with tests conducted by NHTSA's VRTC, which used an acceleration sled with the HIII–3Cs dummy in the same child restraints. According to DJG, the comparison showed that even though there were

some differences in the methods, sled setups, and dummy neck hardware, the Dorel/Kettering target sled kinematics were comparable to that of the VRTC acceleration sled sliding seat, including the rate of acceleration, peak acceleration, and pulse duration. In addition, DJG noted that the dummy response duration and the impacting speed in the two sled systems were similar. Based on these data, DJG concluded that the Dorel/Kettering deceleration test procedure ''complements'' the VRTC acceleration sled test procedure and requested that the Dorel/Kettering deceleration test method be included in the proposal for a new side impact test in FMVSS No. 213.

The DJG petition, along with the test data, is available in the docket of this NPRM.

Discussion of Petition

After analyzing the petitioner's data, we are unable to conclude that the Dorel/Kettering test procedure complements, i.e., is comparable to, the Takata procedure we evaluated on the acceleration sled. While the Dorel/Kettering test procedure appears to represent the intruding door velocity profile reasonably well, it does not sufficiently estimate the change in velocity of the passenger compartment as does the Takata acceleration sled procedure. The Dorel/Kettering test procedure does not include oblique side impacts or a representative armrest to the intruding door. In addition, the resultant head acceleration, HIC, upper neck forces and moments, pelvic resultant acceleration, and resultant spine acceleration of the HIII–3Cs dummy were consistently lower in the Dorel/Kettering tests than in the acceleration sled tests using the same CRS, door impact velocity, and similar type of dummy.[95] DJG has also not presented any data demonstrating that the dummy responses in the Dorel/Kettering sled tests are similar to those observed in vehicle crash tests. For these reasons, we believe that the Dorel/Kettering test procedure needs further development to represent the crash environment experienced by children in child restraints in near-side impacts in a manner comparable to the Takata procedure evaluated by the agency on the acceleration sled.

We note, however, that one of the strengths of the Takata test procedure is its simplicity and apparent versatility for application on an acceleration or a deceleration sled system. We believe that the provisions of the proposed test procedure, specified in the regulatory text, can be used to conduct the test on either an acceleration or a deceleration sled. Therefore, we do not believe there is a need to include a new test procedure expressly applicable to a deceleration sled in this proposal, as DJG requested.

It is our desire that the proposed test procedure be specified in a way that it can be conducted on an acceleration or a deceleration sled. The agency is planning to evaluate the repeatability and reproducibility of the proposed sled test procedure in different laboratories. We are interested in comments on what parameters, additional to the proposed specifications, should be specified to reproduce the proposed test procedure on a deceleration sled.

In any event, we note that under the National Traffic and Motor Vehicle Safety Act, child restraint manufacturers are required to certify the compliance of their child restraints with the applicable FMVSSs. The Safety Act does not require manufacturers to certify their products using the test procedures specified in the applicable safety standard. Instead, the safety standard sets forth the procedures that NHTSA will take to conduct compliance tests. In the event of a noncompliance with an FMVSS, NHTSA will ask the manufacturer the basis for its certification, and will review the data upon which the certification was made. Depending on the situation, the information used for the certification could be from a sled test matching the test specified in the standard, a comparable sled test providing valid and accurate results, or it could be from entirely different method of inquiry as long as a good faith certification could be made. Thus, if FMVSS No. 213 were to specify a test that describes an acceleration sled system, that would not preclude a manufacturer from using a deceleration sled to test and certify its child restraints. Accordingly, since the FMVSSs do not need to incorporate a specific test procedure preferred by a manufacturer for the manufacturer to be able to use the test procedure as its chosen basis for certification, the petitioner's requested action is not necessary. For these reasons, the petition is denied.

XVI. Costs and Benefits

There are approximately 7.42 million child restraints sold annually for children weighing up to 40 lb. These child restraints are composed of rear-facing infant seats, convertible seats (seats that can be used rear-facing and forward-facing), toddler seats (seats with harnesses, used only forward-facing), and combination seats (seats that can be used from forward-facing to booster mode). Of this total, it is estimated that there are approximately 2.73 million infant seats, 2.76 million convertible/toddler seats and 1.93 million combination seats. These sales estimates are based on sales in calendar year 2011.

Based on our sled test data, we estimate that approximately 80 percent of rear-facing infant seats (2.18 million) would need larger wings (padded side structure) and/or additional padding, and that similar countermeasures would be needed for 58.3 percent of the convertible/toddler seats (1.6 million) and 58.3 percent of combination seats (1.1 million). The retail cost of padding for rear-facing seats is estimated to be $0.66 per CRS. Accordingly, we estimate that the annual consumer cost for 2.18 million rear-facing CRSs that do not already comply with this test would be $1.441 million. The retail cost of padding for convertible/toddler seats that do not already comply with this test is estimated to be approximately $0.82 per CRS, so the annual consumer cost for 1.6 million convertible/toddler seats would be $1.321 million. The retail cost of padding for combination seats that do not already comply with this test is estimated to be approximately $0.82 per CRS, so the annual consumer cost for 1.1 million combination CRSs would be $0.925 million. The total annual consumer cost for the CRSs is estimated to be approximately $3.687 million. Distributing this total cost to all child restraints sold annually for children weighing up to 40 lb (7.42 million child restraints) results in an average cost of $0.50 per child restraint. Comments are requested on these calculations.

This NPRM proposes to apply the side impact protection requirements to belt-positioning seats designed for children in a weight range that includes weights up to 18 kg (40 lb) to improve the protection of children seated in such CRSs. Applying the side impact protection requirements to more children than less is consistent with MAP–21. We do not have test data that can be used to estimate the countermeasures needed on belt-positioning seats to meet the proposed side impact protection requirements. Comments are requested on the countermeasures needed by belt-positioning seats to meet side impact requirements when tested with the Q3s.

Since CRSs sold for children weighing more than 18 kg (40 lb) would be excluded from the proposed side impact protection requirements, an approach available at no additional cost to manufacturers would be to re-label the

[95] The Dorel/Kettering test procedure has not been evaluated using the Q3s child dummy.

belt-positioning seat as not recommended for children weighing less than 18 kg (40 lb). We find this approach to be desirable in that it is aligned with NHTSA's view [96] that children under age 4 are more protected in a CRS with a harness than in a belt-positioning seat. Moreover, the labeling change would increase the likelihood that children would be restrained by CRSs that meet side impact protection requirements up to 18 kg (40 lb) (until about 4 years in age). Regardless of whether a manufacturer re-labels the belt-positioning seat to restrict use of the belt-positioning seat to children weighing over 18 kg (40 lb) or designs a belt-positioning seat to meet the proposed requirements, the effect of the proposed requirement would be to improve the side impact protection to children weighing less than 18 kg (40 lb).

We believe that there will be no lost sales due to the change in the booster seat label. There are no boosters on the market sold only for children from 30 to 40 lb. Boosters are sold for children with a starting weight of 30 or 40 lb, to a maximum weight of 60, 70, 80 or more pounds. Those that are sold for children with a starting weight of 30 lb will just be relabeled to have the minimum weight start at 40 lb. Children riding in harnessed toddler seats will continue using the toddler seat until they graduate to a booster seat at a minimum weight of 40 lb. Similarly, combination seats that are sold for use with younger children (with a harness) and older children (as a booster) will continue to be marketed to the same children as before the rule. The only change resulting from the new label would be that the booster seat mode would not be recommended for use until the child reaches 40 lb. Comments are requested on this issue.

We estimate that 36.7 non-fatal injuries (MAIS 1–5) to children in rear-facing child restraints annually would be prevented by the proposed requirements. In addition, 5.2 fatalities and 27.6 non-fatal injuries to children in forward-facing child restraints annually would be prevented by the proposed requirements. We have not estimated the annual benefits for children in the weight range 13.6–18 kg (30–40 lb) who are restrained in belt-positioning seats because we have not estimated the countermeasures needed. However, we believe that the benefits of belt-positioning seats with improved side impact protection for children weighing 13.6–18 kg (30–40 lb) are very small since FARS and NASS–CDS data files indicate very few injuries in side impact crashes to this population of children in belt-positioning seats.[97] The total benefits of this proposed rule would be 5.2 fatalities and 64 MAIS 1–5 injuries prevented, which amount to 18.3 equivalent lives saved per year.[98] The equivalent lives and the monetized benefits were estimated in accordance with guidance issued February 28, 2013 by the Office of the Secretary [99] regarding the treatment of value of a statistical life in regulatory analyses. The PRIA, available in the docket for this NPRM, details the methodology for estimating costs, benefits, and net benefits resulting from this proposed rule. The monetized net benefits for this proposed rule were estimated to be $178.9 million at 3 percent discount rate and $162.0 million at 7 percent discount rate in 2010 dollars.

The agency estimates that the cost of conducting the test described in the proposed rule would be approximately $1,300. We estimate that 96 CRS models comprise the 7.42 million CRSs sold annually that are subject to this NPRM. The subject CRSs are rear-facing CRSs, and convertible, toddler, and combination CRSs designed for children weighing up to 18 kg (40 lb). Of the 96 CRS models, 31 models are infant seats, 50 models are convertible seats, and 15 models are toddler and combination seats. The infant seats would involve one sled test with the 12 MO CRABI, the convertible seats would involve 3 sled tests (2 sled tests in the rear-facing mode with the 12 MO CRABI and the Q3s and 1 sled test in forward-facing mode with the Q3s), and the toddler and combination seats would involve 1 sled test with the Q3s. Therefore, we estimate that, assuming manufacturers would be conducting the dynamic test specified in the proposed rule (or a similar test) to certify their child restraints to the new side impact requirements, overall they would conduct 196 sled tests for the current 96 models available in the market, for an annual testing cost of $254,800. This testing cost, distributed among the 7.42 million CRSs sold annually, with an average model life of 5 years, is less than $0.01 per CRS.

XVII. Effective Date

The agency is proposing a lead time of 3 years from date of publication of the final rule. This means that CRSs manufactured on or after the date 3 years after the date of publication of the final rule must meet the side impact requirements. We propose to permit optional early compliance with the requirements beginning soon after the date of publication of the final rule.

Note that section 31501 of MAP–21 states that not later than 2 years after the date of enactment of the Act (which was July 6, 2012), the Secretary shall issue a final rule amending FMVSS No. 213 regarding side impact protection. Section 31505 of MAP–21 states that if the Secretary determines that any deadline for issuing a final rule under the Act cannot be met, the Secretary shall provide an explanation for why such deadline cannot be met and establish a new deadline for the rule.

We believe there is good cause for providing 3 years lead time. CRS manufacturers will have to gain familiarity with the new test procedures and the new Q3s dummy, assess their products' conformance to the FMVSS No. 213 side impact test, and possibly incorporate changes into their designs. We believe that 3 years lead time would give manufacturers sufficient time to design CRSs that comply with the side impact requirements.

XVIII. Regulatory Notices and Analyses

Executive Order (E.O.) 12866 (Regulatory Planning and Review), E.O. 13563, and DOT Regulatory Policies and Procedures

The agency has considered the impact of this rulemaking action under E.O. 12866, E.O. 13563, and the Department of Transportation's regulatory policies and procedures. This rulemaking is considered ''significant'' and was reviewed by the Office of Management and Budget under E.O. 12866, ''Regulatory Planning and Review.''

The NPRM proposes to amend FMVSS No. 213 to adopt side impact performance requirements for child restraint systems designed to seat children in a weight range that includes weights up to 18 kg (40 lb). The proposal would specify a side impact test in which the child restraints must protect the occupant in a dynamic test simulating a vehicle-to-vehicle side impact. The side impact test would be additional to the current frontal impact tests of FMVSS No. 213.

We estimate that the annual cost of the proposed rule would be

[96] *http://www.safercar.gov/parents/RightSeat.htm.* Last accessed August 7, 2012. See also PRIA, pp. 19–20.

[97] This is because only a small percentage of children in this weight range are restrained in belt-positioning seats. A Safe Kids USA survey in the first quarter of 2012 at Child Passenger Safety Technician (CPST) seat check stations indicated that only 10 percent of children in the weight range 13.6–18 kg (30–40 lb) were in belt-positioning seats.

[98] This estimate assumes that the proposed changes will have the same level of effectiveness in preventing injuries to children in misused seats as estimated for children in properly used seats.

[99] *http://www.dot.gov/sites/dot.dev/files/docs/VSL%20Guidance%202013.pdf.*

approximately $3.7 million. The countermeasures may include larger wings (side structure) and padding with energy-absorption characteristics that have a retail cost of approximately $0.50 per CRS.[100] We estimate that the proposed rule would prevent 5.2 fatalities and 64 MAIS 1–5 non-fatal injuries annually. The annual net benefits are estimated to be $162.0 million (7 percent discount rate) to $178.9 million (3 percent discount rate).

In developing this NPRM, NHTSA has considered HIC_{15} requirements of 400 and 800 as alternatives to the preferred proposal of HIC_{15} = 570.[101] The PRIA accompanying this NPRM provides an assessment of benefits and costs of the HIC_{15} = 400 and 800 alternatives.

Of the alternatives presented for HIC_{15}, NHTSA's preferred alternative is an injury threshold of 570. We tentatively conclude that this threshold value achieves a reasonable balance of practicability, safety, and cost. The HIC_{15} = 570 threshold is used in FMVSS No. 208, ''Occupant crash protection,'' for the 3-year-old child dummy. It is a scaled threshold based on FMVSS No. 208's criterion for the 50th percentile adult male dummy, which was adjusted to the 3-year-old using a process that accounts for differences in geometric size and material strength. HIC_{15} of 570 corresponds to an 11 percent risk of AIS 3+ injury and a 1.6 percent risk of fatality. We tentatively conclude that the 570 scaled maximum would protect children in child restraints from an unreasonable risk of fatality and serious injury in side impacts.

Comparing the three alternatives (at the 7 percent discount rate), we find that an 800 HIC_{15} limit results in: (a) Many fewer equivalent lives saved than the proposed 570 HIC_{15} limit (7.24 vs. 18.26); (b) higher cost per equivalent life saved ($488,000 vs. $242,000); and, (c) lower net benefits ($63 million vs. $162 million). Thus, on all three measures, 800 HIC_{15} appears inferior to the proposed 570 HIC_{15}.

The 400 HIC_{15} alternative results in: (a) More equivalent lives saved than the proposed 570 HIC_{15} limit (28.87 vs. 18.26); higher cost per equivalent life saved ($314,000 vs. $242,000); and, (c) higher net benefits ($250 million vs. $162 million). Thus, on two of the three measures, at first glance 400 HIC_{15} has appeal compared to the proposed 570 HIC_{15} limit.

However, the agency's preferred alternative is 570 HIC_{15} because we are concerned about the effect of a 400 HIC_{15} limit on child restraint design and use. In the analysis we performed for this NPRM, we assumed that padding alone would be insufficient to meet a 400 HIC_{15} limit; we assumed that the 6 child restraints we tested would need a theoretical kind of structural improvement to the side of the seats to meet a 400 HIC_{15} limit. However, we have not proven out that the structural improvements we assumed would in fact be enough to meet the 400 HIC_{15} limit. Thus, there is some uncertainty on the agency's part whether the structural modifications can be implemented to meet the 400 HIC_{15} criterion at the cost we assumed.

We also believe that another means of meeting a 400 HIC_{15} limit would be to increase the thickness of the padding used in the child restraint. We are concerned that thicker padding around the head area could reduce the space provided for the child's head, which may make the child restraint seem, to parents and other caregivers, too confining for the child. The restricted space for the child's head could in fact reduce the ability of the seated child to move his or her head freely. Those factors could affect acceptability and use of the harness-equipped age-appropriate child restraints by consumers. Alternatively, if manufacturers decided to increase the thickness of the padding in the head area and widen the CRS to retain the current space between the child's head and side padding, the child restraint would have to be made wider and heavier. Again, this might affect the overall use of the child restraint.

Considering all of these factors, NHTSA has chosen 570 HIC_{15} as the best overall proposal with known consequences that can be met with a reasonable thickness of padding alone.

Regulatory Flexibility Act

Pursuant to the Regulatory Flexibility Act (5 U.S.C. 601 et seq., as amended by the Small Business Regulatory Enforcement Fairness Act (SBREFA) of 1996) whenever an agency is required to publish a notice of proposed rulemaking or final rule, it must prepare and make available for public comment a regulatory flexibility analysis that describes the effect of the rule on small entities (i.e., small businesses, small organizations, and small governmental jurisdictions), unless the head of an agency certifies the rule will not have a significant economic impact on a substantial number of small entities. Agencies must also provide a statement of the factual basis for this certification.

I certify that this proposed rule would not have a significant economic impact on a substantial number of small entities. NHTSA estimates there to be 29 manufacturers of child restraints, none of which are small businesses. Based on our fleet testing, we believe that most of the CRSs that would be subject to the proposed side impact requirements would meet the proposed requirements without a need to modify the CRS. For rear-facing infant seats and forward-facing restraints with harnesses that need to be modified, the agency estimates that the average incremental costs to each child restraint system would be only $0.50 per unit to meet the proposed rule. This incremental cost would not constitute a significant economic impact. Further, the incremental cost is not significant compared to the retail price of a child restraint system for infants and toddlers, which is in the range of $45 to $350. These incremental costs, which are very small compared to the overall price of the child restraint, can ultimately be passed on to the purchaser.

For belt-positioning seats that do not meet the proposed side impact requirements, the simplest course for a manufacturer would be to re-label the restraint so that it is marketed for children not in a weight class that would subject the CRS to the proposed requirements. That is, the CRSs could be marketed as belt-positioning seats for children weighing more than 18 kg (40 lb), instead of for children weighing above 13.6 kg (30 lb).[102]

The agency believes that the cost of conducting the test described in the proposed rule (estimated at $1,300) spread over the number of units sold of that child restraint model would be very small, especially when compared to the

[100] The agency believes that the cost of a compliance test (estimated at $1,300) spread over the number of units sold of that child restraint model is very small, especially when compared to the price of a child restraint. We estimate that 96 CRS models comprise the 5.5 million rear-facing CRSs and forward-facing convertible and combination CRSs (designed for children weighing up to 18 kg (40 lb)) sold annually, which have an average model life of 5 years. Therefore, the annual cost of testing new CRS models would be $254,800. This testing cost distributed among the 5.5 million CRSs sold annually would be less than $0.01 per CRS.

[101] The agency analyzed different values for HIC_{15} because head injuries are the major cause of fatalities of children in side impacts. Real word data of side impacts involving CRS-restrained children indicate that 55–68 percent of MAIS 2+ injuries are to the head, while only 22–29 percent are to the chest. We determined that changes in the HIC_{15} injury threshold would have a significantly higher effect on the benefit/costs resulting from this rulemaking than would changes to the chest deflection injury threshold. For this reason, alternatives to the proposed chest deflection injury threshold (23 mm) were not examined.

[102] Currently, FMVSS No. 213 prohibits manufacturers from recommending belt-positioning seats for children weighing less than 13.6 kg (30 lb).

price of a child restraint. We estimate that 96 CRS models comprise the 7.42 million rear-facing CRSs and forward-facing convertible and combination CRSs sold annually. The average model life is estimated to be 5 years. Therefore, we estimate that, assuming manufacturers would be conducting the dynamic test specified in the proposed rule (or a similar test) to certify their child restraints to the new side impact requirements, the annual cost of testing new CRS models would be $254,800. This testing cost, distributed among the 7.42 million CRSs sold annually with an average model life of 5 years, would be less than $0.01 per CRS.

National Environmental Policy Act

NHTSA has analyzed this proposed rule for the purposes of the National Environmental Policy Act and determined that it would not have any significant impact on the quality of the human environment.

Executive Order 13132 (Federalism)

NHTSA has examined today's proposed rule pursuant to Executive Order 13132 (64 FR 43255, August 10, 1999) and concluded that no additional consultation with States, local governments or their representatives is mandated beyond the rulemaking process. The agency has concluded that the rulemaking would not have sufficient federalism implications to warrant consultation with State and local officials or the preparation of a federalism summary impact statement. The proposed rule would not have ''substantial direct effects on the States, on the relationship between the national government and the States, or on the distribution of power and responsibilities among the various levels of government.''

NHTSA rules can preempt in two ways. First, the National Traffic and Motor Vehicle Safety Act contains an express preemption provision: When a motor vehicle safety standard is in effect under this chapter, a State or a political subdivision of a State may prescribe or continue in effect a standard applicable to the same aspect of performance of a motor vehicle or motor vehicle equipment only if the standard is identical to the standard prescribed under this chapter. 49 U.S.C. 30103(b)(1). It is this statutory command by Congress that preempts any non-identical State legislative and administrative law addressing the same aspect of performance.

The express preemption provision described above is subject to a savings clause under which ''[c]ompliance with a motor vehicle safety standard prescribed under this chapter does not exempt a person from liability at common law.'' 49 U.S.C. 30103(e) Pursuant to this provision, State common law tort causes of action against motor vehicle manufacturers that might otherwise be preempted by the express preemption provision are generally preserved. However, the Supreme Court has recognized the possibility, in some instances, of implied preemption of such State common law tort causes of action by virtue of NHTSA's rules, even if not expressly preempted. This second way that NHTSA rules can preempt is dependent upon there being an actual conflict between an FMVSS and the higher standard that would effectively be imposed on motor vehicle manufacturers if someone obtained a State common law tort judgment against the manufacturer, notwithstanding the manufacturer's compliance with the NHTSA standard. Because most NHTSA standards established by an FMVSS are minimum standards, a State common law tort cause of action that seeks to impose a higher standard on motor vehicle manufacturers will generally not be preempted. However, if and when such a conflict does exist—for example, when the standard at issue is both a minimum and a maximum standard—the State common law tort cause of action is impliedly preempted. See *Geier* v. *American Honda Motor Co.,* 529 U.S. 861 (2000).

Pursuant to Executive Order 13132 and 12988, NHTSA has considered whether this proposed rule could or should preempt State common law causes of action. The agency's ability to announce its conclusion regarding the preemptive effect of one of its rules reduces the likelihood that preemption will be an issue in any subsequent tort litigation.

To this end, the agency has examined the nature (e.g., the language and structure of the regulatory text) and objectives of today's proposed rule and finds that this proposed rule, like many NHTSA rules, would prescribe only a minimum safety standard. As such, NHTSA does not intend that this proposed rule would preempt state tort law that would effectively impose a higher standard on motor vehicle manufacturers than that established by today's proposed rule. Establishment of a higher standard by means of State tort law would not conflict with the minimum standard proposed here. Without any conflict, there could not be any implied preemption of a State common law tort cause of action.

Civil Justice Reform

With respect to the review of the promulgation of a new regulation, section 3(b) of Executive Order 12988, ''Civil Justice Reform'' (61 FR 4729, February 7, 1996) requires that Executive agencies make every reasonable effort to ensure that the regulation: (1) Clearly specifies the preemptive effect; (2) clearly specifies the effect on existing Federal law or regulation; (3) provides a clear legal standard for affected conduct, while promoting simplification and burden reduction; (4) clearly specifies the retroactive effect, if any; (5) adequately defines key terms; and (6) addresses other important issues affecting clarity and general draftsmanship under any guidelines issued by the Attorney General. This document is consistent with that requirement.

Pursuant to this Order, NHTSA notes as follows. The preemptive effect of this proposed rule is discussed above. NHTSA notes further that there is no requirement that individuals submit a petition for reconsideration or pursue other administrative proceeding before they may file suit in court.

Paperwork Reduction Act (PRA)

Under the PRA of 1995, a person is not required to respond to a collection of information by a Federal agency unless the collection displays a valid OMB control number. In this notice of proposed rulemaking, we propose no ''collections of information'' (as defined at 5 CFR 1320.3(c)).

National Technology Transfer and Advancement Act

Under the National Technology Transfer and Advancement Act of 1995 (NTTAA)(Public Law 104–113), all Federal agencies and departments shall use technical standards that are developed or adopted by voluntary consensus standards bodies, using such technical standards as a means to carry out policy objectives or activities determined by the agencies and departments. Voluntary consensus standards are technical standards (e.g., materials specifications, test methods, sampling procedures, and business practices) that are developed or adopted by voluntary consensus standards bodies, such as the International Organization for Standardization (ISO) and the Society of Automotive Engineers (SAE). The NTTAA directs us to provide Congress, through OMB, explanations when we decide not to use available and applicable voluntary consensus standards.

As explained above in this preamble, NHTSA reviewed the procedures and

regulations developed globally to dynamically test child restraints in the side impact environment. Except for the Takata test procedure, the procedures and regulations did not replicate all of the dynamic elements of a side crash that we sought to include in the side impact test or were not sufficiently developed for further consideration.

NHTSA considered AS/NZS 1754 for implementation into FMVSS No. 213 but did not find it acceptable, mainly because that it does not simulate the intruding door, which we believe is an important component in the side impact environment. In addition, AS/NZS 1754 does not account for a longitudinal component, which we also believe to be an important characteristic of a side crash. (As noted above, NHTSA's 2002 ANPRM, *supra,* was based on AS/NZS 1754. Commenters to the ANPRM believed that a dynamic test should account for some degree of vehicle intrusion into the occupant compartment.) Australia's CREP test also was limited by its lack of an intruding door, which is a component that is important in the side impact environment.

Germany's ADAC test procedure lacks an intruding door. While the ISO/TNO test procedure accounts for the deceleration and intrusion experienced by a car in a side impact crash, one of its limitations is that the angular velocity of the hinged door is difficult to control, which results in poor repeatability. In addition, these methods do not include a longitudinal velocity component to the intruding door, which is present in most side impacts and which, we believe, should be replicated in the FMVSS No. 213 test. NHTSA considered the EU's test procedure but decided not to pursue it, since the test is of lower severity than the crash conditions we wanted to replicate and of lower severity than the FMVSS No. 214 MDB side impact crash test of a small passenger vehicle. Moreover, the test procedure is only intended for evaluating CRSs with rigid ISOFIX attachments, which are not available on CRSs in the U.S. Further, the sliding anchors do not seem to produce a representative interaction between the door and CRS during a side impact, and may introduce variability in the test results. The NPACS consumer program is still undergoing development and the details of the sled test procedure and dummies are not available.

We note that NHTSA has based the side impact test proposal on a test procedure that was developed by Takata, a manufacturer in the restraint industry. By so doing, NHTSA has saved agency resources by making use of pertinent technical information that is already available. We believe this effort to save resources is consistent with the Act's goal of reducing when possible the agency's cost of developing its own standards.

Unfunded Mandates Reform Act

Section 202 of the Unfunded Mandates Reform Act of 1995 (UMRA), Public Law 104–4, requires Federal agencies to prepare a written assessment of the costs, benefits, and other effects of proposed or final rules that include a Federal mandate likely to result in the expenditure by State, local, or tribal governments, in the aggregate, or by the private sector, of more than $100 million annually (adjusted for inflation with base year of 1995). Adjusting this amount by the implicit gross domestic product price deflator for the year 2010 results in $136 million (110.993/81.606 = 1.36). This NPRM would not result in a cost of $136 million or more to either State, local, or tribal governments, in the aggregate, or the private sector. Thus, this NPRM is not subject to the requirements of sections 202 of the UMRA.

Executive Order 13609 (Promoting International Regulatory Cooperation)

The policy statement in section 1 of E.O. 13609 provides, in part:

> The regulatory approaches taken by foreign governments may differ from those taken by U.S. regulatory agencies to address similar issues. In some cases, the differences between the regulatory approaches of U.S. agencies and those of their foreign counterparts might not be necessary and might impair the ability of American businesses to export and compete internationally. In meeting shared challenges involving health, safety, labor, security, environmental, and other issues, international regulatory cooperation can identify approaches that are at least as protective as those that are or would be adopted in the absence of such cooperation. International regulatory cooperation can also reduce, eliminate, or prevent unnecessary differences in regulatory requirements.

NHTSA requests public comment on the ''regulatory approaches taken by foreign governments'' concerning the subject matter of this rulemaking. In the discussion above on the NTTAA, we have noted that we have reviewed the procedures and regulations developed globally to test child restraints dynamically in the side impact environment, and found the Takata test procedure to be the most suitable for our purposes. Comments are requested on the above policy statement and the implications it has for this rulemaking.

Regulation Identifier Number

The Department of Transportation assigns a regulation identifier number (RIN) to each regulatory action listed in the Unified Agenda of Federal Regulations. The Regulatory Information Service Center publishes the Unified Agenda in April and October of each year. You may use the RIN contained in the heading at the beginning of this document to find this action in the Unified Agenda.

Plain Language

Executive Order 12866 requires each agency to write all rules in plain language. Application of the principles of plain language includes consideration of the following questions:

- Have we organized the material to suit the public's needs?
- Are the requirements in the rule clearly stated?
- Does the rule contain technical language or jargon that isn't clear?
- Would a different format (grouping and order of sections, use of headings, paragraphing) make the rule easier to understand?
- Would more (but shorter) sections be better?
- Could we improve clarity by adding tables, lists, or diagrams?
- What else could we do to make the rule easier to understand?

If you have any responses to these questions, please write to us with your views.

XIX. Public Participation

In developing this proposal, we tried to address the concerns of all our stakeholders. Your comments will help us improve this proposed rule. We welcome your views on all aspects of this proposed rule, but request comments on specific issues throughout this document. Your comments will be most effective if you follow the suggestions below:

—Explain your views and reasoning as clearly as possible.
—Provide solid technical and cost data to support your views.
—If you estimate potential costs, explain how you arrived at the estimate.
—Tell us which parts of the proposal you support, as well as those with which you disagree.
—Provide specific examples to illustrate your concerns.
—Offer specific alternatives.
—Refer your comments to specific sections of the proposal, such as the units or page numbers of the preamble, or the regulatory sections.
—Be sure to include the name, date, and docket number with your comments.

Your comments must be written and in English. To ensure that your comments are correctly filed in the docket, please include the docket number of this document in your comments.

Your comments must not be more than 15 pages long (49 CFR 553.21). We established this limit to encourage you to write your primary comments in a concise fashion. However, you may attach necessary additional documents to your comments. There is no limit on the length of the attachments.

Please submit your comments to the docket electronically by logging onto *http://www.regulations.gov* or by the means given in the **ADDRESSES** section at the beginning of this document.

Please note that pursuant to the Data Quality Act, in order for substantive data to be relied upon and used by the agency, it must meet the information quality standards set forth in the OMB and DOT Data Quality Act guidelines. Accordingly, we encourage you to consult the guidelines in preparing your comments. OMB's guidelines may be accessed at *http://www.whitehouse.gov/omb/fedreg/reproducible.html.*

How do I submit confidential business information?

If you wish to submit any information under a claim of confidentiality, you should submit three copies of your complete submission, including the information you claim to be confidential business information, to the Chief Counsel, NHTSA, at the address given above under **FOR FURTHER INFORMATION CONTACT.** In addition, you should submit a copy from which you have deleted the claimed confidential business information to the docket. When you send a comment containing information claimed to be confidential business information, you should include a cover letter setting forth the information specified in our confidential business information regulation. (49 CFR Part 512.)

Will the Agency consider late comments?

We will consider all comments that the docket receives before the close of business on the comment closing date indicated above under **DATES**. To the extent possible, we will also consider comments that the docket receives after that date. If the docket receives a comment too late for us to consider it in developing a final rule (assuming that one is issued), we will consider that comment as an informal suggestion for future rulemaking action.

How can I read the comments submitted by other people?

You may read the comments received by the docket at the address given above under **ADDRESSES**. You may also see the comments on the Internet (*http://regulations.gov*).

Please note that even after the comment closing date, we will continue to file relevant information in the docket as it becomes available. Further, some people may submit late comments. Accordingly, we recommend that you periodically check the docket for new material.

Anyone is able to search the electronic form of all comments received into any of our dockets by the name of the individual submitting the comment (or signing the comment, if submitted on behalf of an association, business, labor union, etc.). You may review DOT's complete Privacy Act Statement in the **Federal Register** published on April 11, 2000 (65 FR 19477–19478).

List of Subjects in 49 CFR Part 571

Imports, Motor vehicle safety, Motor vehicles, and Tires.

In consideration of the foregoing, NHTSA proposes to amend 49 CFR Part 571 as set forth below.

PART 571—FEDERAL MOTOR VEHICLE SAFETY STANDARDS

■ 1. The authority citation for Part 571 continues to read as follows:

Authority: 49 U.S.C. 322, 30111, 30115, 30117 and 30166; delegation of authority at 49 CFR 1.95.

■ 2. Section 571.5 is amended by adding paragraph (k)(5), and by revising paragraph (l)(3), to read as follows:

§ 571.5 Matter incorporated by reference.

* * * * *

(k) * * *

(5) Drawing Package, ''NHTSA Standard Seat Assembly; FMVSS No. 213—Side impact No. NHTSA–213–2011,'' dated June 2012, into § 571.213a.

* * * * *

(l) * * *

(3) SAE Recommended Practice J211, ''Instrumentation for Impact Tests,'' revised June 1980, into §§ 571.213; 571.213a; 571.218.

* * * * *

■ 3. Section 571.213 is amended by adding paragraph S5(g) to read as follows:

§ 571.213 Standard No. 213; Child restraint systems.

* * * * *

S5 * * *

* * * * *

(g) Each add-on child restraint system manufactured for use in motor vehicles, that is recommended for children in a weight range that includes weights up to 18 kilograms (40 pounds), shall meet the requirements in this standard and the additional side impact protection requirements in Standard No. 213a (§ 571.213a). Excepted from Standard No. 213a are harnesses and car beds.

* * * * *

■ 4. Section 571.213a is added to read as follows:

§ 571.213a Standard No. 213a; Child restraint systems—side impact protection.

S1. *Scope.* This standard specifies side impact protection requirements for child restraint systems recommended for children in a weight range that includes weights up to 18 kilograms (kg) ((40 pounds (lb)).

S2. *Purpose.* The purpose of this standard is to reduce the number of children killed or injured in motor vehicle side impacts.

S3. *Application.* This standard applies to add-on child restraint systems, except for harnesses and car beds, that are recommended for use by children in a weight range that includes weights up to 18 kg (40 lb), or by children in a height range that includes children whose height is not greater than 1100 millimeters.

S4. *Definitions.*

Add-on child restraint system means any portable child restraint system.

Belt-positioning seat means a child restraint system that positions a child on a vehicle seat to improve the fit of a vehicle Type II belt system on the child and that lacks any component, such as a belt system or a structural element, designed to restrain forward movement of the child's torso in a forward impact.

Car bed means a child restraint system designed to restrain or position a child in the supine or prone position on a continuous flat surface.

Child restraint anchorage system is defined in S3 of FMVSS No. 225 (§ 571.225).

Child restraint system is defined in S4 of FMVSS No. 213 (§ 571.213).

Contactable surface means any child restraint system surface (other than that of a belt, belt buckle, or belt adjustment hardware) that may contact any part of the head or torso of the appropriate test dummy, specified in S7, when a child restraint system is tested in accordance with S6.1.

Harness means a combination pelvic and upper torso child restraint system that consists primarily of flexible material, such as straps, webbing or similar material, and that does not

include a rigid seating structure for the child.

Rear-facing child restraint system means a child restraint system that positions a child to face in the direction opposite to the normal (forward) direction of travel of the motor vehicle.

Seat orientation reference line or *SORL* means the horizontal line through Point Z as illustrated in Figure 1.

Tether anchorage is defined in S3 of FMVSS No. 225 (§ 571.225).

Tether strap is defined in S3 of FMVSS No. 225 (§ 571.225).

Torso means the portion of the body of a seated anthropomorphic test dummy, excluding the thighs, that lies between the top of the child restraint system seating surface and the top of the shoulders of the test dummy.

S5. *Requirements.*

(a) Each child restraint system subject to this section shall meet the requirements in this section when, as specified, tested in accordance with S6 and this paragraph. Each child restraint system shall meet the requirements at each of the restraint's seat back angle adjustment positions and restraint belt routing positions, when the restraint is oriented in the forward or rearward direction recommended by the manufacturer pursuant to S5.6 of FMVSS No. 213 (§ 571.213), and tested with the test dummy specified in S7 of this section.

(b) Each child restraint system subject to this section shall also meet all applicable requirements in FMVSS No. 213 (§ 571.213).

S5.1 *Dynamic performance.*

S5.1.1 *Child restraint system integrity.* When tested in accordance with S6.1, each child restraint system shall meet the requirements of paragraphs (a) through (c) of this section.

(a) Exhibit no complete separation of any load bearing structural element and no partial separation exposing either surfaces with a radius of less than 6 mm (¼ inch) or surfaces with protrusions greater than 9 mm (⅜ inch) above the immediate adjacent surrounding contactable surface of any structural element of the child restraint system.

(b)(1) If adjustable to different positions, remain in the same adjustment position during the testing that it was in immediately before the testing, except as otherwise specified in paragraph (b)(2).

(2)(i) Subject to paragraph (b)(2)(ii), a rear-facing child restraint system may have a means for repositioning the seating surface of the system that allows the system's occupant to move from a reclined position to an upright position and back to a reclined position during testing.

(ii) No opening that is exposed and is larger than 6 mm (¼ inch) before the testing shall become smaller during the testing as a result of the movement of the seating surface relative to the child restraint system as a whole.

(c) If a front facing child restraint system, not allow the angle between the system's back support surfaces for the child and the system's seating surface to be less than 45 degrees at the completion of the test.

S5.1.2 *Injury criteria.*

When tested in accordance with S6.1 and with the test dummy specified in S7, each child restraint system that, in accordance with S5.5.2 of Standard No. 213 (§ 571.213), is recommended for use by children whose mass is more than 10 kg shall—

(a) Limit the resultant acceleration at the location of the accelerometer mounted in the test dummy head such that, for any two points in time, t1 and t2, during the event which are separated by not more than a 15 millisecond time interval and where t1 is less than t2, the maximum calculated head injury criterion (HIC) shall not exceed 570, determined using the resultant head acceleration at the center of gravity of the dummy head as expressed as a multiple of g (the acceleration of gravity), calculated using the expression:

$$HIC = \left[\frac{1}{(t_2 - t_1)} \int_{t_1}^{t_2} a\,dt \right]^{2.5} (t_2 - t_1)$$

(b) The maximum chest compression (or deflection) from the output of the thoracic InfraRed Telescoping Rod for Assessment of Chest Compression (IR–TRACC) shall not exceed 23 millimeters.

S5.1.3 *Occupant containment.* When tested in accordance with S6.1 and the requirements specified in this section, each child restraint system recommended for use by children in a specified mass range that includes any children having a mass greater than 5 kg (11 lb) but not greater than 10 kg (22 lb), shall retain the test dummy's head such that there is no direct contact of the head to any part of the side impact seat assembly described in S6.1.1(a).

S5.1.4 *Protrusion limitation.* Any portion of a rigid structural component within or underlying a contactable surface shall, with any padding or other flexible overlay material removed, have a height above any immediately adjacent restraint system surface of not more than 9 mm (⅜ inch) and no exposed edge with a radius of less than 6 mm (¼ inch).

S5.1.5 *Belt buckle release.* Any buckle in a child restraint system belt assembly designed to restrain a child using the system shall:

(a) When tested in accordance with the appropriate sections of S6.2, after the dynamic test of S6.1, release when a force of not more than 71 N is applied.

(b) Not release during the testing specified in S6.1.

S6. *Test conditions and procedures.*

S6.1 *Dynamic side impact test for child restraint systems.*

The test conditions and test procedure for the dynamic side impact test are specified in S6.1.1 and S6.1.2, respectively.

S6.1.1 *Test conditions.*

(a) *Test device.*

(1) The test device is a side impact seat assembly (SISA) consisting of a simulated vehicle bench seat, with one seating position, and a simulated door assembly as described in Drawing Package, ''NHTSA Standard Seat Assembly; FMVSS No. 213—Side impact No. NHTSA–213–2011,'' dated June 2012 (incorporated by reference, see § 571.5). The simulated door assembly is rigidly attached to the floor of the SISA and the simulated vehicle bench seat is mounted on rails to allow it to move relative to the floor of the SISA in the direction perpendicular to the SORL. The SISA is mounted on a dynamic test platform so that the SORL of the seat is 10 degrees from the perpendicular direction of the test platform travel. The SISA is rotated counterclockwise if the impact side is on the left of the seating position and clockwise if the impact side is on the right of the seating position.

(2) As illustrated in the SISA drawing package, attached to the SISA is a child restraint anchorage system conforming to the specifications of Standard No. 225 (§ 571.225).

(b) Accelerate the test platform to achieve a relative velocity (V_0) of 31.3 ± 0.8 km/h in the direction perpendicular to the SORL between the SISA bench seat and the door assembly at the time they come in contact (time = T_0). The front face of the armrest on the door is 32 ± 2 mm from the edge of the seat towards the SORL at time = T_0. The test platform velocity in the direction perpendicular to the SORL is not greater than V_0 and not less than V_0 – 1 km/h during the time of interaction of the door with the child restraint system.

(c) The change in velocity of the bench seat is 31.3 ± 1.0 km/h and the bench seat acceleration perpendicular to

the SORL is within the corridor shown in Figure 3.

(d) Performance tests under S6.1 are conducted at any ambient temperature from 20.6 °C to 22.2 °C and at any relative humidity from 10 percent to 70 percent.

(e) The child restraint shall meet the requirements of S5 at each of its seat back angle adjustment positions and restraint belt routing positions, when the restraint is oriented in the direction recommended by the manufacturer (e.g., forward or rearward) pursuant to S5.5 of Standard No. 213 (§ 571.213), and tested with the test dummy specified in S7 of this section.

S6.1.2 *Dynamic test procedure.*

(a) The child restraint centerline is positioned 300 mm from the SISA bench seat edge (impact side) and attached in any of the following manners.

(1) Install the child restraint system using the child restraint anchorage system in accordance with the manufacturer's instructions provided with the child restraint system pursuant to S5.6 of Standard No. 213 (§ 571.213), except as provided in this paragraph. For forward-facing restraints, attach the tether strap, if provided, to the tether anchorage on the SISA. No other supplemental device to attach the child restraint is used. Tighten belt systems used to attach the restraint to the SISA bench seat to a tension of not less than 53.5 N and not more than 67 N.

(2) For rear-facing restraints, install the child restraint system using only the lower anchorages of the child restraint anchorage system in accordance with the manufacturer's instructions provided with the child restraint system pursuant to S5.6 of Standard No. 213 (§ 571.213). No tether strap (or any other supplemental device) is used. Tighten belt systems used to attach the restraint to the SISA bench seat to a tension of not less than 53.5 N and not more than 67 N.

(3) For belt-positioning seats, use the lap and shoulder belt and no tether or any other supplemental device.

(b) Select any dummy specified in S7 for testing child restraint systems for use by children of the heights and weights for which the system is recommended in accordance with S5.5 of Standard No. 213 (§ 571.213). The dummy is assembled, clothed and prepared as specified in S8 and Part 572 of this chapter, as appropriate.

(c) The dummy is placed and positioned in the child restraint system as specified in S9. Attach the child restraint belts used to restrain the child within the system, if appropriate, as specified in S9.

(d) *Belt adjustment.* Shoulder and pelvic belts that directly restrain the dummy are adjusted as follows: Tighten the belt system used to restrain the child within the child restraint system to a tension of not less than 9 N on the webbing at the top of each dummy shoulder and the pelvic region. Tighten the belt systems used to attach the restraint to the SISA bench seat to a tension of not less than 53.5 N and not more than 67 N. For belt-positioning seats, the lap portion of the lap and shoulder belt is tightened to a tension of not less than 53.5 N and not more than 67 N. The shoulder portion is tightened to a tension of not less than 9 N and not more than 18 N.

(e) Accelerate the test platform in accordance with S6.1.1(b).

(f) All instrumentation and data reduction is in conformance with SAE J211 JUN80 (incorporated by reference, see § 571.5).

S6.2 *Buckle release test procedure.*

(a) After completion of the testing specified in S6.1 and before the buckle is unlatched, tie a self-adjusting sling to each wrist and ankle of the test dummy in the manner illustrated in Figure 4 of Standard No. 213 (§ 571.213), without disturbing the belted dummy and the child restraint system.

(b) Pull the sling that is tied to the dummy restrained in the child restraint system and apply the following force: 90 N for a system tested with a 12-month-old dummy; 200 N for a system tested with a 3-year-old dummy. For an add-on child restraint, the force is applied in the manner illustrated in Figure 4 of Standard No. 213 (§ 571.213) and by pulling the sling horizontally and parallel to the SORL of the SISA.

(c) While applying the force specified in S6.2 (b), and using the device shown in Figure 8 of Standard No. 213 (§ 571.213) for pushbutton-release buckles, apply the release force in the manner and location specified in S6.2.1, for that type of buckle. Measure the force required to release the buckle.

S7 *Test dummies.* (Subparts referenced in this section are of part 572 of this chapter.)

S7.1 *Dummy selection.* At NHTSA's option, any dummy specified in S7.1(a) or S7.1(b) may be selected for testing child restraint systems for use by children of the height and mass for which the system is recommended in accordance with S5.5 of Standard No. 213 (§ 571.213). A child restraint that meets the criteria in two or more of the following paragraphs may be tested with any of the test dummies specified in those paragraphs.

(a) A child restraint that is recommended by its manufacturer in accordance with S5.5 of Standard No. 213 (§ 571.213) for use either by children in a specified mass range that includes any children having a mass greater than 5 kg (11 lb) but not greater than 10 kg (22 lb), or by children in a specified height range that includes any children whose height is greater than 650 mm but not greater than 850 mm, is tested with a 12-month-old test dummy (CRABI) conforming to part 572 subpart R.

(b) A child restraint that is recommended by its manufacturer in accordance with S5.5 of Standard No. 213 (§ 571.213) for use either by children in a specified mass range that includes any children having a mass greater than 10 kg (22 lb) but not greater than 18 kg (40 lb), or by children in a specified height range that includes any children whose height is greater than 850 mm but not greater than 1100 mm, is tested with a 3-year-old test dummy (Q3s) conforming to part 572 subpart W.

S8 *Dummy clothing and preparation.*

S8.1 *Type of clothing.*

(a) *12-month-old dummy (CRABI) (49 CFR Part 572, Subpart R).* When used in testing under this standard, the dummy specified in 49 CFR part 572, subpart R, is clothed in a cotton-polyester based tight fitting sweat shirt with long sleeves and ankle long pants whose combined weight is not more than 0.25 kg.

(b) *3-year-old side impact dummy (Q3s) (49 CFR Part 572, Subpart W).* When used in testing under this standard, the dummy specified in 49 CFR part 572, subpart W, is clothed as specified in that subpart, except without shoes.

S8.2 *Preparing dummies.* Before being used in testing under this standard, test dummies must be conditioned at any ambient temperature from 20.6° to 22.2 °C and at any relative humidity from 10 percent to 70 percent, for at least 4 hours.

S9 *Positioning the dummy and attaching the belts used to restrain the child within the child restraint system and/or to attach the system to the SISA bench seat.*

S9.1 *12-month-old dummy (CRABI) (49 CFR Part 572, Subpart R).* Position the test dummy according to the instructions for child positioning that the manufacturer provided with the child restraint system under S5.6.1 or S5.6.2 of Standard No. 213 (§ 571.213), while conforming to the following:

(a) When testing rear-facing child restraint systems, place the 12-month-old dummy in the child restraint system so that the back of the dummy torso contacts the back support surface of the system. Attach all appropriate child

restraint belts used to restrain the child within the child restraint system and tighten them as specified in S6.1.2(d). Attach all appropriate belts used to attach the child restraint system to the SISA bench seat and tighten them as specified in S6.1.2.

(b) When testing forward-facing child restraint systems, extend the dummy's arms vertically upwards and then rotate each arm downward toward the dummy's lower body until the arm contacts a surface of the child restraint system or the SISA. Ensure that no arm is restrained from movement in other than the downward direction, by any part of the system or the belts used to anchor the system to the SISA bench seat.

(c) When testing forward-facing child restraint systems, extend the arms of the 12-month-old test dummy as far as possible in the upward vertical direction. Extend the legs of the test dummy as far as possible in the forward horizontal direction, with the dummy feet perpendicular to the centerline of the lower legs. Using a flat square surface with an area of 2,580 square mm, apply a force of 178 N, perpendicular to the plane of the back of the standard seat assembly, first against the dummy crotch and then at the dummy thorax in the midsagittal plane of the dummy. Attach all appropriate child restraint belts used to restrain the child within the child restraint system and tighten them as specified in S6.1.2(d). Attach all appropriate belts used to attach the child restraint system to the SISA bench seat and tighten them as specified in S6.1.2.

(d) After the steps specified in paragraph (c), rotate each dummy limb downwards in the plane parallel to the dummy's midsagittal plane until the limb contacts a surface of the child restraint system or the standard seat assembly. Position the limbs, if necessary, so that limb placement does not inhibit torso or head movement in tests conducted under S6.

S9.2 *3-year-old side impact dummy (Q3s) (49 CFR Part 572, Subpart W) in forward-facing child restraints.* Position the test dummy according to the instructions for child positioning that the restraint manufacturer provided with the child restraint system in accordance with S5.6.1 or S5.6.2 of Standard No. 213 (§ 571.213), while conforming to the following:

(a) Holding the test dummy torso upright until it contacts the child restraint system's design seating surface, place the test dummy in the seated position within the child restraint system with the midsagittal plane of the test dummy head coincident with the center of the child restraint system.

(b) Extend the arms of the test dummy as far as possible in the upward vertical direction. Extend the legs of the dummy as far as possible in the forward horizontal direction, with the dummy feet perpendicular to the center line of the lower legs.

(c) Using a flat square surface with an area of 2580 square millimeters, apply a force of 178 N, perpendicular to the plane of the back of the SISA first against the dummy crotch and then at the dummy thorax in the midsagittal plane of the dummy. For a child restraint system with a fixed or movable surface, position each movable surface in accordance with the instructions that the manufacturer provided under S5.6.1 or S5.6.2 of Standard No. 213 (§ 571.213). For forward-facing restraints, attach all appropriate child restraint belts used to restrain the child within the child restraint system and tighten them as specified in S6.1.2(d). Attach all appropriate belts used to attach the child restraint system to the SISA or to restrain the child and tighten them as specified in S6.1.2. For belt-positioning seats, attach all appropriate vehicle belts used to restrain the child within the child restraint system and tighten them as specified in S6.1.2(d).

(c) After the steps specified in paragraph (b) of this section, rotate each of the dummy's legs downwards in the plane parallel to the dummy's midsagittal plane until the limb contacts a surface of the child restraint or the SISA. Rotate each of the dummy's arms downwards in the plane parallel to the dummy's midsagittal plane until the arm is positioned at a 25 degree angle with respect to the thorax.

S9.3 *3-year-old side impact dummy (Q3s) (49 CFR Part 572, Subpart W) in rear-facing child restraints.* Position the test dummy according to the instructions for child positioning that the restraint manufacturer provided with the child restraint system in accordance with S5.6.1 or S5.6.2 of Standard No. 213 (§ 571.213), while conforming to the following:

(a) Extend the arms of the test dummy as far as possible in the upward vertical direction. Extend the legs of the dummy as far as possible in the forward horizontal direction, with the dummy feet perpendicular to the center line of the lower legs.

(b) Place the Q3s dummy in the child restraint system so that the back of the dummy torso contacts the back support surface of the system. Place the test dummy in the child restraint system with the midsagittal plane of the test dummy head coincident with the center of the child restraint system. Rotate each of the dummy's legs downwards in the plane parallel to the dummy's midsagittal plane until the leg or feet of the dummy contacts the seat back of the SISA or a surface of the child restraint system.

(c) Using a flat square surface with an area of 2580 square millimeters, apply a force of 178 N, perpendicular to the plane of the back of the SISA bench seat first against the dummy crotch and then at the dummy thorax in the midsagittal plane of the dummy. For a child restraint system with a fixed or movable surface, position each movable surface in accordance with the instructions that the manufacturer provided under S5.6.1 or S5.6.2 of Standard No. 213 (§ 571.213). Attach all appropriate child restraint belts for use to restrain a child within the child restraint system and tighten them as specified in S6.1.2(d). Attach all appropriate belts used to attach the child restraint system to the SISA and tighten them as specified in S6.1.2.

(d) After the steps specified in paragraph (c) of this section, rotate each dummy arm downwards in the plane parallel to the dummy's midsagittal plane until the limb is positioned at a 25 degree angle with respect to the thorax.

FIGURES TO § 571.213a

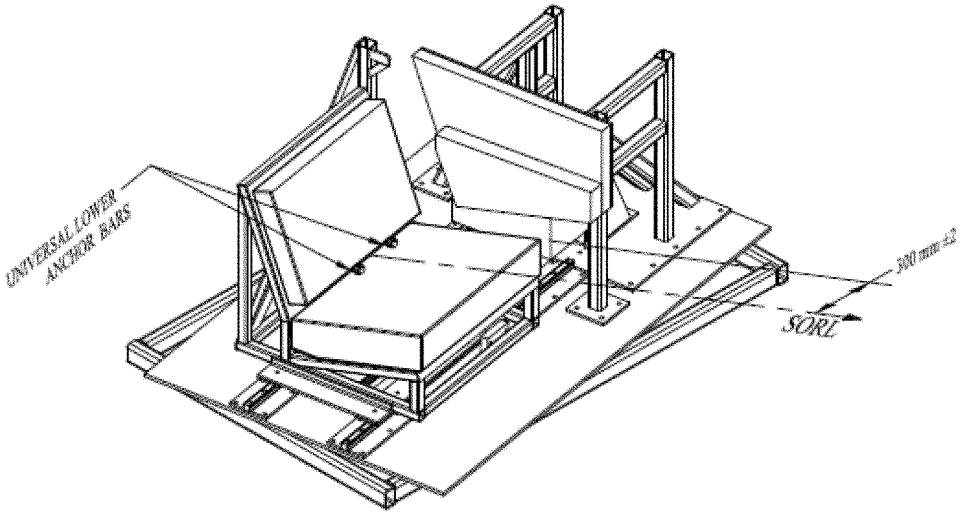

SIDE IMPACT SEAT ASSEMBLY
FIGURE 1

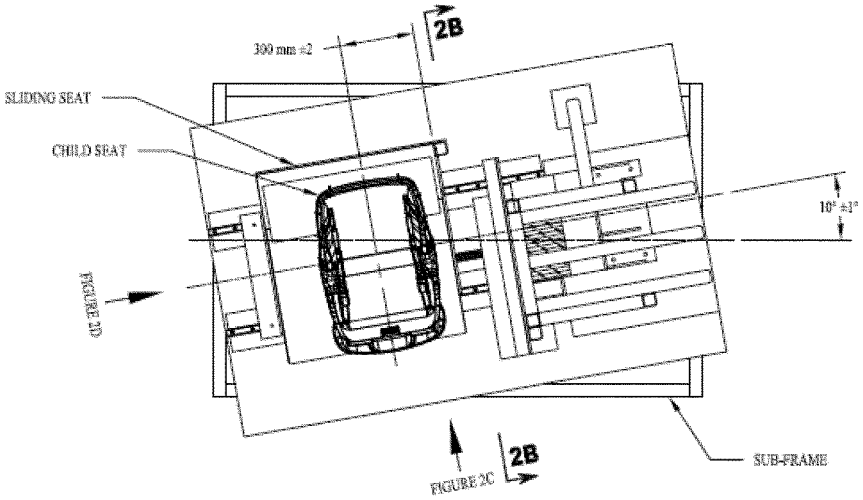

SIDE IMPACT SEAT ASSEMBLY
PLAN VIEW
FIGURE 2A

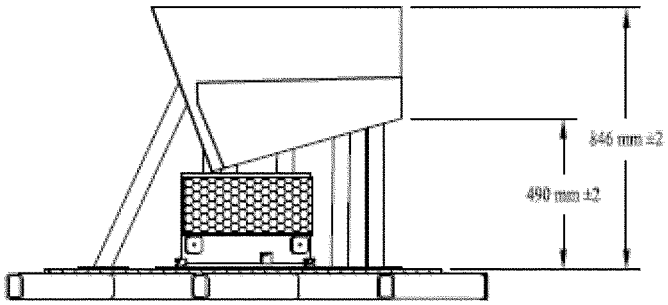

SIDE IMPACT SSEAT ASSEMBLY
DOOR PANEL VIEW
FIGURE 2B

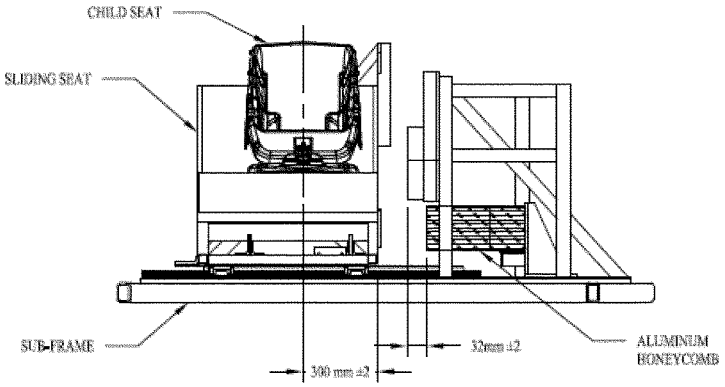

SIDE IMPACT SEAT ASSEMBLY
FRONTAL VIEW
FIGURE 2C

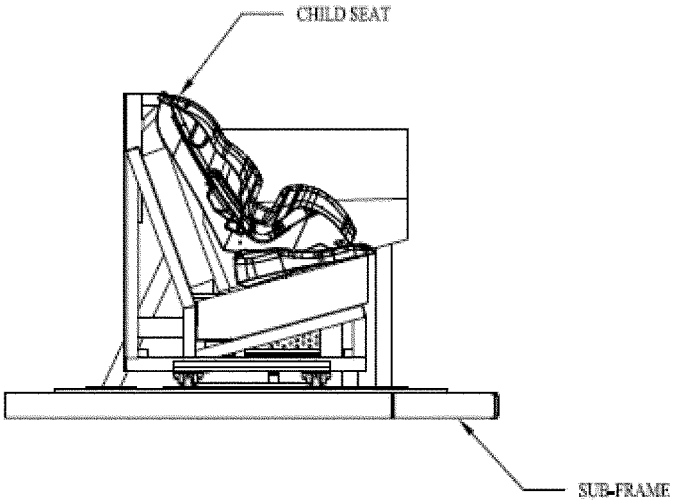

SIDE IMPACT SEAT ASSEMBLY
SIDE VIEW
FIGURE 2D

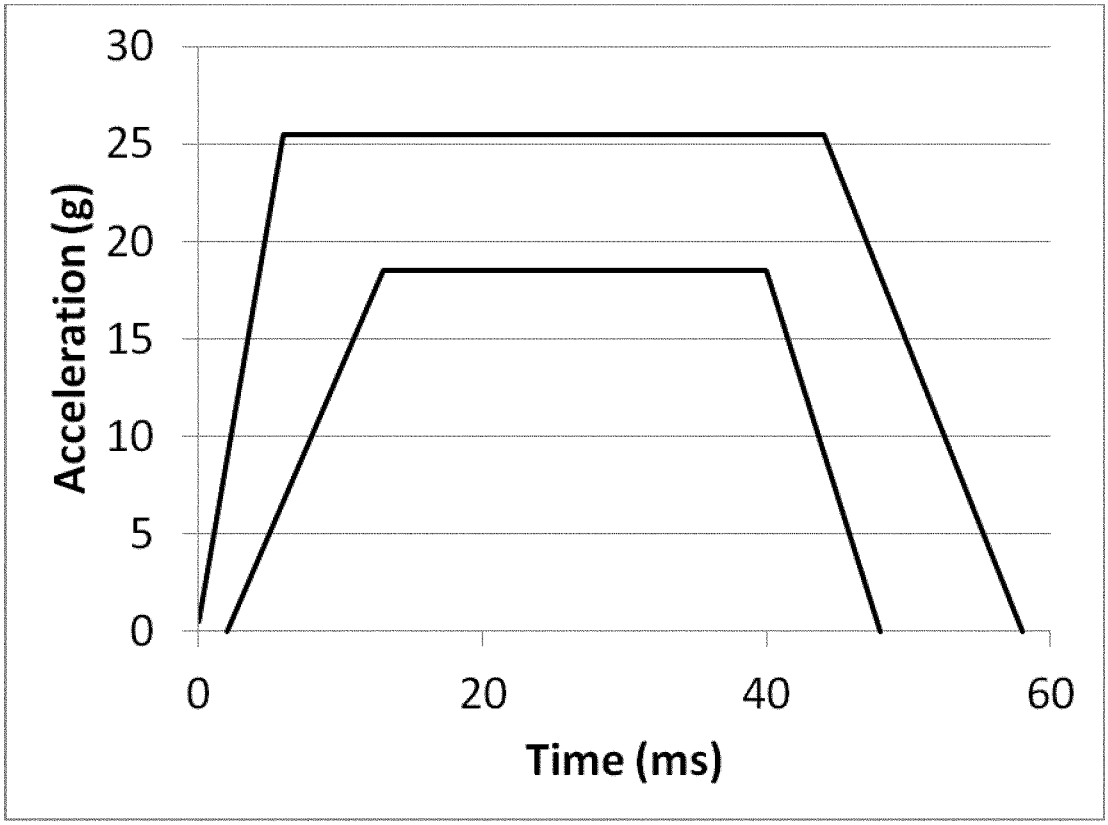

Figure 3. SISA Bench Seat Acceleration Boundaries

Issued on: January 22, 2014.

Christopher J. Bonanti,

Associate Administrator for Rulemaking.

[FR Doc. 2014–01568 Filed 1–23–14; 4:15 pm]

BILLING CODE 4910–59–P