AUTHENTICATED
U.S. GOVERNMENT
INFORMATION
GPO

FEDERAL REGISTER

Vol. 78 Thursday,
No. 225 November 21, 2013

Pages 69753–69982

OFFICE OF THE FEDERAL REGISTER

The **FEDERAL REGISTER** (ISSN 0097–6326) is published daily, Monday through Friday, except official holidays, by the Office of the Federal Register, National Archives and Records Administration, Washington, DC 20408, under the Federal Register Act (44 U.S.C. Ch. 15) and the regulations of the Administrative Committee of the Federal Register (1 CFR Ch. I). The Superintendent of Documents, U.S. Government Printing Office, Washington, DC 20402 is the exclusive distributor of the official edition. Periodicals postage is paid at Washington, DC.

The **FEDERAL REGISTER** provides a uniform system for making available to the public regulations and legal notices issued by Federal agencies. These include Presidential proclamations and Executive Orders, Federal agency documents having general applicability and legal effect, documents required to be published by act of Congress, and other Federal agency documents of public interest.

Documents are on file for public inspection in the Office of the Federal Register the day before they are published, unless the issuing agency requests earlier filing. For a list of documents currently on file for public inspection, see *www.ofr.gov.*

The seal of the National Archives and Records Administration authenticates the Federal Register as the official serial publication established under the Federal Register Act. Under 44 U.S.C. 1507, the contents of the **Federal Register** shall be judicially noticed.

The **Federal Register** is published in paper and on 24x microfiche. It is also available online at no charge at *www.fdsys.gov*, a service of the U.S. Government Printing Office.

The online edition of the **Federal Register** is issued under the authority of the Administrative Committee of the Federal Register as the official legal equivalent of the paper and microfiche editions (44 U.S.C. 4101 and 1 CFR 5.10). It is updated by 6:00 a.m. each day the **Federal Register** is published and includes both text and graphics from Volume 59, 1 (January 2, 1994) forward. For more information, contact the GPO Customer Contact Center, U.S. Government Printing Office. Phone 202-512-1800 or 866-512-1800 (toll free). E-mail, *gpo@custhelp.com.*

The annual subscription price for the **Federal Register** paper edition is $749 plus postage, or $808, plus postage, for a combined **Federal Register, Federal Register** Index and List of CFR Sections Affected (LSA) subscription; the microfiche edition of the **Federal Register** including the **Federal Register** Index and LSA is $165, plus postage. Six month subscriptions are available for one-half the annual rate. The prevailing postal rates will be applied to orders according to the delivery method requested. The price of a single copy of the daily **Federal Register,** including postage, is based on the number of pages: $11 for an issue containing less than 200 pages; $22 for an issue containing 200 to 400 pages; and $33 for an issue containing more than 400 pages. Single issues of the microfiche edition may be purchased for $3 per copy, including postage. Remit check or money order, made payable to the Superintendent of Documents, or charge to your GPO Deposit Account, VISA, MasterCard, American Express, or Discover. Mail to: U.S. Government Printing Office—New Orders, P.O. Box 979050, St. Louis, MO 63197-9000; or call toll free 1-866-512-1800, DC area 202-512-1800; or go to the U.S. Government Online Bookstore site, see *bookstore.gpo.gov.*

There are no restrictions on the republication of material appearing in the **Federal Register.**

How To Cite This Publication: Use the volume number and the page number. Example: 77 FR 12345.

Postmaster: Send address changes to the Superintendent of Documents, Federal Register, U.S. Government Printing Office, Washington, DC 20402, along with the entire mailing label from the last issue received.

SUBSCRIPTIONS AND COPIES

PUBLIC

Subscriptions:

Paper or fiche	**202–512–1800**
Assistance with public subscriptions	**202–512–1806**

General online information **202–512–1530; 1–888–293–6498**

Single copies/back copies:

Paper or fiche	**202–512–1800**
Assistance with public single copies	**1–866–512–1800 (Toll-Free)**

FEDERAL AGENCIES

Subscriptions:

Paper or fiche	**202–741–6005**
Assistance with Federal agency subscriptions	**202–741–6005**

Printed on recycled paper.

Contents

Federal Register

Vol. 78, No. 225

Thursday, November 21, 2013

Agency for International Development
PROPOSED RULES
Partner Vetting in USAID Assistance; Correction, 69802

Agriculture Department
See Forest Service

Army Department
NOTICES
Agency Information Collection Activities; Proposals, Submissions, and Approvals, 69836–69839

Bureau of Consumer Financial Protection
RULES
Agency Information Collection Activities; Proposals, Submissions, and Approvals, 69753
NOTICES
Privacy Act; Systems of Records, 69834–69836

Census Bureau
NOTICES
Agency Information Collection Activities; Proposals, Submissions, and Approvals:
Questionnaire for Building Permit Official, 69814–69815

Centers for Disease Control and Prevention
NOTICES
Agency Information Collection Activities; Proposals, Submissions, and Approvals, 69854–69856

Coast Guard
PROPOSED RULES
Drawbridge Operations:
Gulf Intracoastal Waterway, Venice, FL, 69803–69805

Commerce Department
See Census Bureau
See Foreign-Trade Zones Board
See International Trade Administration
See National Oceanic and Atmospheric Administration

Comptroller of the Currency
NOTICES
Agency Information Collection Activities; Proposals, Submissions, and Approvals:
Fair Credit Reporting; Affiliate Marketing, 69935–69936
Lending Limits, 69934–69935

Consumer Product Safety Commission
PROPOSED RULES
Voluntary Remedial Actions and Guidelines for Voluntary Recall Notices, 69793–69802

Defense Department
See Army Department
PROPOSED RULES
Federal Acquisition Regulations:
Ending Trafficking in Persons, 69812–69813
NOTICES
Meetings:
Defense Science Board Advisory Committee, 69836

Education Department
NOTICES
Applications for New Awards:
National Institute on Disability and Rehabilitation Research; Disability and Rehabilitation Research Projects and Centers Program; Minority-Serving Institution Field-Initiated Projects Program, 69839

Employment and Training Administration
NOTICES
Amended Certifications Regarding Eligibility to Apply for Worker Adjustment Assistance:
First Advantage Corp., St. Petersburg, FL, et al., 69878
Applications for Reconsideration:
AT and T Corp., Pittsburgh, PA, 69878–69879
Funding Availability:
Youth CareerConnect Programs Grant Program, 69879
Meetings:
Native American Employment and Training Council; Workforce Investment Act, 69879–69880
Worker Adjustment Assistance; Determinations, 69880–69883
Worker Adjustment Assistance; Investigations, 69883–69885

Energy Department
See Federal Energy Regulatory Commission
NOTICES
Meetings:
DOE/NSF High Energy Physics Advisory Panel, 69839
Requests for Information:
Building Technologies Office Prioritization Tool, 69839–69843

Environmental Protection Agency
RULES
Air Quality State Implementation Plans; Approvals and Promulgations:
Texas; Control of Air Pollution by Permits for New Construction or Modification; Permits for Specific Designated Facilities, 69773–69777
PROPOSED RULES
Air Quality State Implementation Plans; Approvals and Promulgations:
Texas; Control of Air Pollution by Permits for New Construction or Modification; Permits for Specific Designated Facilities, 69812
Identification of Nonattainment Classification and Deadlines for Submission of State Implementation Plans:
Provisions for the 1997 Fine Particle (PM2.5) National Ambient Air Quality Standard and 2006 PM2.5 NAAQS, 69806–69812
NOTICES
Issuance of an Experimental Use Permit, 69849

Export-Import Bank
NOTICES
Agency Information Collection Activities; Proposals, Submissions, and Approvals:
Application for Issuing Bank Credit Limit under Lender or Exporter-Held Policies, 69849–69850

Applications for Long-Term Loan or Financial Guarantee in Excess of 100 Million Dollars, 69850–69851

Federal Aviation Administration
PROPOSED RULES
Airworthiness Directives:
Slingsby Aviation Ltd. Airplanes, 69785–69787
Modification of Class E Airspace:
Sitka, AK, 69787–69789
Policy and Procedures Concerning the Use of Airport Revenue:
Proceeds from Taxes on Aviation Fuel, 69789–69793
NOTICES
Manufacturers of Continuous Friction Measurement Equipment, 69927–69928
Meetings:
RTCA Special Committee 186, Automatic Dependent Surveillance-Broadcast, 69929
RTCA Special Committee 206, Aeronautical Information and Meteorological Data Link Services, 69928–69929
RTCA Special Committee 228; Minimum Operational Performance Standards for Unmanned Aircraft Systems, 69928
Petitions for Exemptions; Summaries, 69929–69930

Federal Communications Commission
NOTICES
Meetings:
Communications Security, Reliability, and Interoperability Council, 69851–69852
Consumer Advisory Committee, 69851

Federal Energy Regulatory Commission
NOTICES
Agency Information Collection Activities; Proposals, Submissions, and Approvals, 69843–69844
Applications and Establishing Procedural Schedules for Licensing and Deadlines for Submission of Final Amendments:
Alaska Village Electric Coop., Inc., 69844–69845
Applications:
Columbia Gas Transmission, LLC, 69845–69846
Transcontinental Gas Pipe Line Co., LLC, 69846–69847
Effectiveness of Exempt Wholesale Generator Status:
Buffalo Dunes Wind Project, LLC, Whitetail Wind Energy, LLC, Merlin One, LLC, Goal Line L.P., RE Columbia 3 LLC, RE Columbia, LLC, RE Yakima LLC, Allegany Generating Station LLC, 69847
Preliminary Determinations of Qualifying Conduit Hydropower Facilities:
North Side Canal Co., 69847–69848
Requests Under Blanket Authorization:
Questar Pipeline Company, 69848
Restricted Service List:
Birch Power Co., Demopolis Lock and Dam Hydroelectric Project; Programmatic Agreement, 69848–69849

Federal Maritime Commission
NOTICES
Ocean Transportation Intermediary License Applicants, 69852

Federal Reserve System
NOTICES
Formations of, Acquisitions by, and Mergers of Bank Holding Companies, 69852–69853

Food and Drug Administration
NOTICES
Determinations that Products were Not Withdrawn from Sale for Reasons of Safety or Effectiveness:
BANZEL (Rufinamide) Tablet, 100 Milligrams, 69856–69857

Foreign-Trade Zones Board
NOTICES
Proposed Production Activities:
Phillips 66 Co., Foreign-Trade Zone 3, San Francisco, CA, 69815–69816

Forest Service
NOTICES
Land Management Plans:
El Yunque National Forest, 69814

General Services Administration
PROPOSED RULES
Federal Acquisition Regulations:
Ending Trafficking in Persons, 69812–69813

Health and Human Services Department
See Centers for Disease Control and Prevention
See Food and Drug Administration
See National Institutes of Health
NOTICES
Meetings:
Advisory Group on Prevention, Health Promotion, and Integrative and Public Health, 69853
Chronic Fatigue Syndrome Advisory Committee, 69853–69854

Homeland Security Department
See Coast Guard
See U.S. Citizenship and Immigration Services
PROPOSED RULES
Adjustments to Limitations on Designated School Official Assignment and Study by F–2 and M–2 Nonimmigrants, 69778–69785
NOTICES
Privacy Act; Systems of Records, 69858–69871

Interior Department
See Land Management Bureau

Internal Revenue Service
NOTICES
Agency Information Collection Activities; Proposals, Submissions, and Approvals, 69936–69939
Meetings:
Taxpayer Advocacy Panel Notices and Correspondence Project Committee, 69940
Taxpayer Advocacy Panel Tax Forms and Publications Project Committee, 69940
Taxpayer Advocacy Panel Taxpayer Assistance Center Improvements Project Committee, 69940
Taxpayer Advocacy Panel Taxpayer Communications Project Committee, 69940–69941
Taxpayer Advocacy Panel Toll-Free Phone Line Project Committee, 69939–69940

International Trade Administration
NOTICES
Agency Information Collection Activities; Proposals, Submissions, and Approvals:
Duty-Free Entry of Scientific Instrument or Apparatus, 69816

Antidumping and Counterveiling Duty Administrative Reviews; Results, Extensions, Amendments, etc.:
Certain Preserved Mushrooms from the People's Republic of China, 69817–69820
Polyethylene Retail Carrier Bags from Thailand, 69817
Seamless Refined Copper Pipe and Tube from the People's Republic of China, 69820–69822

Justice Department
See Justice Programs Office
RULES
Exemption of Records Systems Under the Privacy Act, 69753–69755
NOTICES
Agency Information Collection Activities; Proposals, Submissions, and Approvals:
Community Oriented Policing Services Progress Report, 69875
Consent Decrees under the Oil Pollution Act, 69875

Justice Programs Office
NOTICES
Agency Information Collection Activities; Proposals, Submissions, and Approvals:
Firearm Inquiry Statistics Program, 69875–69876
Meetings:
Advisory Committee of the Attorney General's Task Force on American Indian/Alaska Native Children Exposed to Violence, 69876–69877
Federal Advisory Committee on Juvenile Justice, 69876

Labor Department
See Employment and Training Administration
NOTICES
Agency Information Collection Activities; Proposals, Submissions, and Approvals:
Hazardous Conditions Complaints, 69877–69878

Land Management Bureau
NOTICES
Agency Information Collection Activities; Proposals, Submissions, and Approvals, 69872–69873
Environmental Impact Statements; Availability, etc.:
Ruby Pipeline Project in Oregon, Nevada, Utah, and Wyoming, 69873–69874
Meetings:
Albuquerque District Resource Advisory Council, 69874–69875

National Aeronautics and Space Administration
PROPOSED RULES
Federal Acquisition Regulations:
Ending Trafficking in Persons, 69812–69813
NOTICES
Meetings:
NASA Advisory Council; Aeronautics Committee, 69885

National Highway Traffic Safety Administration
PROPOSED RULES
Anthropomorphic Test Devices:
Q3s 3-Year-Old Child Side Impact Test Dummy, 69944–69982
NOTICES
Petitions for Decisions of Inconsequential Noncompliance:
Ford Motor Co., 69931–69932

National Institutes of Health
NOTICES
Agency Information Collection Activities; Proposals, Submissions, and Approvals:
Certificate of Confidentiality Electronic Application System, 69857
Meetings:
Eunice Kennedy Shriver National Institute of Child Health and Human Development, 69857–69858
National Cancer Institute, 69858
National Institute on Drug Abuse, 69858

National Oceanic and Atmospheric Administration
NOTICES
Agency Information Collection Activities; Proposals, Submissions, and Approvals:
Pacific Tuna Fisheries Logbook, 69822–69823
Atlantic Highly Migratory Species:
Exempted Fishing, Scientific Research, Display, and Chartering Permits; Letters of Acknowledgment, 69823–69825
Takes of Marine Mammals Incidental to Specified Activities:
Pier Maintenance Project, 69825–69834

Postal Regulatory Commission
PROPOSED RULES
Periodic Reporting (Proposals Six Through Nine), 69805–69806

Postal Service
RULES
International Product and Price Changes, 69755–69773

Securities and Exchange Commission
NOTICES
Applications:
AIM Growth Series (Invesco Growth Series), et al., 69885–69888
ETFis Series Trust I, et al., 69888–69897
Self-Regulatory Organizations; Proposed Rule Changes:
BATS Exchange, Inc., BATS–Y Exchange, Inc., BOX Options Exchange LLC, etc., 69910–69918
Chicago Board Options Exchange, Inc., 69918–69921
International Securities Exchange, LLC, 69923–69925
National Stock Exchange, Inc., 69900–69904
New York Stock Exchange LLC, 69907–69910
NYSE Arca, Inc., 69897–69900
NYSE MKT LLC, 69904–69907
Topaz Exchange, LLC, 69921–69923
Trading Suspension Orders:
HouseRaising, Inc., iElement Corporation, InforMedix Holdings, Inc., Nortia Capital Partners, Inc., and PC Universe, Inc., 69925

Social Security Administration
NOTICES
Privacy Act; Computer Matching Program, 69925–69927

State Department
NOTICES
Designations as Foreign Terrorist Organizations:
Kurdistan Worker's Party and Other Aliases, 69927

State Justice Institute
NOTICES
Meetings:
Board of Directors, 69927

Surface Transportation Board
NOTICES
Purchases of Certain Assets and Membership Interests:
Tedesco Family ESB Trust, et al.; Evergreen Trails, Inc. d/b/a Horizon Coach Lines, et al., 69932–69933

Transportation Department
See Federal Aviation Administration
See National Highway Traffic Safety Administration
See Surface Transportation Board

Treasury Department
See Comptroller of the Currency
See Internal Revenue Service
NOTICES
Agency Information Collection Activities; Proposals, Submissions, and Approvals, 69933–69934

U.S. Citizenship and Immigration Services
NOTICES
Agency Information Collection Activities; Proposals, Submissions, and Approvals:
myE-Verify, 69871–69872

Separate Parts In This Issue

Part II
Transportation Department, National Highway Traffic Safety Administration, 69944–69982

Reader Aids

Consult the Reader Aids section at the end of this page for phone numbers, online resources, finding aids, reminders, and notice of recently enacted public laws.

To subscribe to the Federal Register Table of Contents LISTSERV electronic mailing list, go to http://listserv.access.gpo.gov and select Online mailing list archives, FEDREGTOC-L, Join or leave the list (or change settings); then follow the instructions.

CFR PARTS AFFECTED IN THIS ISSUE

A cumulative list of the parts affected this month can be found in the Reader Aids section at the end of this issue.

8 CFR

Proposed Rules:

214 69778

12 CFR

1002 69753
1005 69753
1024 69753
1026 69753

14 CFR

Proposed Rules:

Ch. I 69789
39 69785
71 69787

16 CFR

Proposed Rules:

1115 69793

22 CFR

Proposed Rules:

226 69802

28 CFR

16 69753

33 CFR

Proposed Rules:

117 69803

39 CFR

20 69755

Proposed Rules:

3050 69805

40 CFR

52 69773

Proposed Rules:

51 69806
52 69812

48 CFR

Proposed Rules:

1 69812
2 69812
9 69812
12 69812
22 69812
52 69812

49 CFR

Proposed Rules:

572 69944

Rules and Regulations

Federal Register

Vol. 78, No. 225

Thursday, November 21, 2013

This section of the FEDERAL REGISTER contains regulatory documents having general applicability and legal effect, most of which are keyed to and codified in the Code of Federal Regulations, which is published under 50 titles pursuant to 44 U.S.C. 1510.

The Code of Federal Regulations is sold by the Superintendent of Documents. Prices of new books are listed in the first FEDERAL REGISTER issue of each week.

BUREAU OF CONSUMER FINANCIAL PROTECTION

12 CFR Parts 1002, 1005, 1024, and 1026

Agency Information Collection Activities; Notice of Office of Management and Budget Approval of Information Collection Requirements

AGENCY: Bureau of Consumer Financial Protection.

ACTION: Notice of approval of information collection requirements.

SUMMARY: In accordance with the Paperwork Reduction Act of 1995 (PRA), the Consumer Financial Protection Bureau (Bureau) is announcing the Office of Management and Budget's (OMB) approval of new and revised information collection requirements contained in various final rules published in the **Federal Register**. See the **SUPPLEMENTARY INFORMATION** section below for additional information about each OMB approval.

DATES: Effective November 21, 2013. The effective date or dates of each final rule listed herein is provided in the related final rule or, as applicable, in relevant amendments published in the **Federal Register**.

FOR FURTHER INFORMATION CONTACT: PRA-related documentation submitted to the OMB for each of the below listed final rules is available at *www.reginfo.gov*. Requests for additional information should be directed to the Bureau's PRA Officer, 1700 G Street NW., Washington, DC 20552, (202) 435–9575, or email: *PRA@cfpb.gov*.

SUPPLEMENTARY INFORMATION: Under the PRA (44 U.S.C. 3501 *et seq.*) the Bureau may not conduct or sponsor, and, notwithstanding any other provision of law, a respondent is not required to respond to, an information collection unless it displays a currently valid OMB control number. Each final rule referenced herein states that affected parties do not have to comply with certain information collection requirements until OMB approves those information collection requirements and the Bureau publishes a notice in the **Federal Register** announcing this approval and the control number assigned by OMB. The Bureau hereby announces OMB approval of the information collection requirements contained in the final rules listed in the table below and the respective OMB control number currently assigned to each of the information collections.

Title of the collection and CFR citation	**Federal Register** citation for final rule	OMB Control No.	Date approved by OMB
Homeownership Counseling Amendments to the Real Estate Settlement Procedures Act (Regulation X)—12 CFR part 1024.	78 FR 6855	3170–0025	04/11/13
Mortgage Servicing Amendment (Regulation X)—12 CFR part 1024	78 FR 10695	3170–0027	04/26/13
Mortgage Servicing Amendment (Regulation Z)—12 CFR part 1026	78 FR 10901	3170–0028	04/17/13
Appraisals for Higher-Risk Mortgage Loans Amendment (Regulation Z)—12 CFR part 1026.	78 FR 10367	3170–0026	04/18/13
Loan Originator Compensation Amendment—12 CFR part 1026	78 FR 11279	3170–0031	04/17/13
Equal Credit Opportunity Act (Regulation B)—12 CFR 1002	78 FR 7215	3170–0013	04/10/13
Electronic Fund Transfer Act (Regulation E)—12 CFR 1005	78 FR 30661	3170–0014	06/25/13
Ability to Repay and Qualified Mortgage Standards Under the Truth in Lending Act (Regulation Z) (Concurrent Proposal)—12 CFR 1026.	78 FR 35429	3170–0035	07/12/13

The Consumer Financial Protection Bureau divided certain proposals to amend the Bureau's Regulations X and Z into separate Information Collection Requests (ICRs) in the Office of Management and Budget (OMB) system (accessible at *www.reginfo.gov*) to ease the public's ability to view and understand the individual proposals. Subsequent to the finalization of the rules, CFPB anticipates that it will recombine the portions of Regulations Z and X that are broken out in the reginfo.gov system into the existing control numbers for Regulations X and Z. CFPB respondents should continue to use the 3170–0015 control number for Regulation Z and 3170–0016 control number for Regulation X throughout this time.

The Bureau notes that, while OMB has approved the information collection requirements as contained in the above noted final rules, the Bureau's current rules remain in effect and affected parties are not required to follow the requirements contained in final rules listed above until such time as the effective date of the respective final rule.

Dated: November 6, 2013.

Ashwin Vasan,

Chief Information Officer, Bureau of Consumer Financial Protection.

[FR Doc. 2013–27337 Filed 11–20–13; 8:45 am]

BILLING CODE 4810–AM–P

DEPARTMENT OF JUSTICE

28 CFR Part 16

[CPCLO Order No. 006–2013]

Exemption of Records Systems Under the Privacy Act

AGENCY: Executive Office for Organized Crime Drug Enforcement Task Forces (OCDETF), Department of Justice.

ACTION: Final rule.

SUMMARY: The Department of Justice (the Department or DOJ) amends its Privacy Act regulations for two Privacy Act systems of records previously entitled the ''Drug Enforcement Task Force Evaluation and Reporting System,'' JUSTICE/DAG–003, and the

''Organized Crime Drug Enforcement Task Force Fusion Center and International Organized Crime Intelligence and Operations Center System,'' JUSTICE/CRM–028. These amendments reflect a recent reorganization of the Department establishing the Executive Office for OCDETF as a separate DOJ component, and transferring responsibility for these systems from the Office of the Deputy Attorney General (ODAG) and the Criminal Division to this component. In light of this departmental reorganization, JUSTICE/DAG–003 has been renumbered to JUSTICE/OCDETF–001 and renamed as the ''Organized Crime Drug Enforcement Task Forces Management Information System (OCDETF MIS),'' and JUSTICE/CRM–028 has been renumbered to JUSTICE/OCDETF–002 while retaining the same name. When under the responsibility of ODAG and the Criminal Division, these systems were exempted from certain provisions of the Privacy Act of 1974 by exemptions placed in the Code of Federal Regulations (CFR) sections containing exemptions for ODAG's and the Criminal Division's Privacy Act systems. These amendments remove references to these systems from the CFR sections for ODAG and Criminal Division exemptions and add a new section for OCDETF exemptions, which continues comparable exemptions for these systems in order to avoid interference with the law enforcement functions and responsibilities of the Executive office for OCDETF.

DATES: This final rule is effective November 21, 2013.

FOR FURTHER INFORMATION CONTACT: Jill Aronica, Chief Information Systems Section, Executive Office for OCDETF, phone 202–514–1860.

SUPPLEMENTARY INFORMATION: The Department published a notice of proposed rulemaking (NPRM) reflecting these amendments in the **Federal Register** at 78 FR 56852, Sept. 16, 2013. (The Department also published amended system of records notices (SORNs) for JUSTICE/OCDETF–001 at 78 FR 56737, Sept. 13, 2013, and for JUSTICE/OCDETF–002 at 78 FR 56926, Sept. 16, 2013.) The Department invited public comments on the NPRM (and the SORNs). The comment periods closed on October 15, 2013, for JUSTICE/OCDETF–001 and on October 16, 2013, for JUSTICE/OCDETF–002 and the NPRM. The United States Postal Service and the government Web site for receiving electronic comments continued to operate as usual throughout the public comment periods. No comments were received on either the NPRM or the SORNs.

List of Subjects in 28 CFR Part 16

Administrative practice and procedure, Courts, Freedom of information, Privacy, Sunshine Act.

Pursuant to the authority vested in the Attorney General by 5 U.S.C. 552a and delegated to me by Attorney General Order 2940–2008, the Department of Justice proposes to amend 28 CFR part 16 as follows:

PART 16—[AMENDED]

■ 1. The authority citation for part 16 continues to read as follows:

Authority: 5 U.S.C. 301, 552, 552a, 552b(g), 553; 18 U.S.C. 4203(a)(1); 28 U.S.C. 509, 510, 534; 31 U.S.C. 3717, 9701.

Subpart E—Exemption of Records Systems Under the Privacy Act

■ 2. Amend § 16.71 as follows:
■ a. Revise paragraph (c);
■ b. Remove the first two sentences of paragraph (d);
■ c. Remove existing paragraph (e)(7); and
■ d. Redesignate paragraph (e)(8) as paragraph (e)(7).

The revision reads as follows:

§ 16.71 Exemption of the Office of the Deputy Attorney General System—limited access.

* * * * *

(c) The General Files System of the Office of the Deputy Attorney General (JUSTICE/DAG–013) is exempt from 5 U.S.C. 552a(c)(3) and (4); (d); (e)(1), (2), (3) and (5); and (g).

* * * * *

§ 16.91 [Amended]

■ 3. Amend § 16.91 by removing paragraphs (u) and (v).

§ 16.135 [Added]

■ 4. Add § 16.135 to subpart E to read as follows:

§ 16.135 Exemptions of Executive Office for Organized Crime Drug Enforcement Task Forces Systems.

(a) The following systems of records are exempt from 5 U.S.C. 552a(c)(3) and (4); (d)(1), (2), (3), and (4); (e)(1), (2), (3), (4)(G), (H), and (I), (5), and (8); (f); and (g):

(1) The Organized Crime Drug Enforcement Task Forces Management Information System (OCDETF MIS) (JUSTICE/OCDETF–001); and

(2) The Organized Crime Drug Enforcement Task Force Fusion Center and International Organized Crime Intelligence and Operations Center System (JUSTICE/OCDETF–002).

(b) These exemptions apply only to the extent that information is subject to exemption under 5 U.S.C. 552a(j) and/or (k).

(c) Exemptions from the particular paragraphs of this section are justified for the following reasons:

(1) From paragraph (c)(3) of this section because to provide the subject with an accounting of disclosures of records in these systems could inform that individual of the existence, nature, or scope of an actual or potential law enforcement or counterintelligence investigation by the Organized Crime Drug Enforcement Task Forces, the Organized Crime Drug Enforcement Task Force Fusion Center, the International Organized Crime Intelligence and Operations Center, or the recipient agency, and could permit that individual to take measures to avoid detection or apprehension, to learn of the identity of witnesses and informants, or to destroy evidence, and would therefore present a serious impediment to law enforcement or counterintelligence efforts. In addition, disclosure of the accounting would amount to notice to the individual of the existence of a record. Moreover, release of an accounting may reveal information that is properly classified pursuant to Executive Order.

(2) From paragraph (c)(4) of this section because this paragraph is inapplicable to the extent that an exemption is being claimed for paragraphs (d)(1), (2), (3), and (4) of this section.

(3) From paragraph (d)(1) of this section because disclosure of records in the system could alert the subject of an actual or potential criminal, civil, or regulatory violation of the existence of that investigation, of the nature and scope of the information and evidence obtained as to his or her activities, of the identity of confidential witnesses and informants, of the investigative interest of the Organized Crime Drug Enforcement Task Forces, the Organized Crime Drug Enforcement Task Force Fusion Center, the International Organized Crime Intelligence and Operations Center, and other intelligence or law enforcement agencies (including those responsible for civil proceedings related to laws against drug trafficking or related financial crimes or international organized crime); could lead to the destruction of evidence, improper influencing of witnesses, fabrication of testimony, and/or flight of the subject; could reveal the details of a sensitive investigative or intelligence technique, or the identity of a confidential source; or could otherwise impede,

compromise, or interfere with investigative efforts and other related law enforcement and/or intelligence activities. In addition, disclosure could invade the privacy of third parties and/or endanger the life, health, and physical safety of law enforcement personnel, confidential informants, witnesses, and potential crime victims. Access to records could also result in the release of information properly classified pursuant to Executive Order.

(4) From paragraph (d)(2) of this section because amendment of the records thought to be inaccurate, irrelevant, incomplete, or untimely would also interfere with ongoing investigations, criminal or civil law enforcement proceedings, and other law enforcement activities; would impose an impossible administrative burden by requiring investigations, analyses, and reports to be continuously reinvestigated and revised; and may impact information properly classified pursuant to Executive Order.

(5) From paragraphs (d)(3) and (4) of this section because these paragraphs are inapplicable to the extent that exemption is claimed from paragraphs (d)(1) and (2) of this section and for the reasons stated in paragraphs (c)(3) and (c)(4) of this section.

(6) From paragraph (e)(1) of this section because, in the course of their acquisition, collation, and analysis of information under the statutory authority granted, the Organized Crime Drug Enforcement Task Forces, the Organized Crime Drug Enforcement Task Force Fusion Center, and the International Organized Crime Intelligence and Operations Center will occasionally obtain information, including information properly classified pursuant to Executive Order, that concerns actual or potential violations of law that are not strictly within their statutory or other authority or may compile and maintain information which may not be relevant to a specific investigation or prosecution. This is because it is impossible to determine in advance what information collected during an investigation or in support of these mission activities will be important or crucial to an investigation. In the interests of effective law enforcement, it is necessary to retain such information in these systems of records because it can aid in establishing patterns of criminal activity of a suspect and can provide valuable leads for federal and other law enforcement agencies. This consideration applies equally to information acquired from, or collated or analyzed for, both law enforcement agencies and agencies of the U.S. foreign intelligence community and military community.

(7) From paragraph (e)(2) of this section because in a criminal, civil, or regulatory investigation, prosecution, or proceeding, the requirement that information be collected to the greatest extent practicable from the subject individual would present a serious impediment to law enforcement because the subject of the investigation, prosecution, or proceeding would be placed on notice as to the existence and nature of the investigation, prosecution, or proceeding and would therefore be able to avoid detection or apprehension, to influence witnesses improperly, to destroy evidence, or to fabricate testimony. Moreover, thorough and effective investigation and prosecution may require seeking information from a number of different sources.

(8) From paragraph (e)(3) of this section because to comply with the requirements of this paragraph during the course of an investigation could impede the information-gathering process, thus hampering the investigation or intelligence gathering. Disclosure to an individual of investigative interest would put the subject on notice of that fact and allow the subject an opportunity to engage in conduct intended to impede that activity or avoid apprehension. Disclosure to other individuals would likewise put them on notice of what might still be a sensitive law enforcement interest and could result in the further intentional or accidental disclosure to the subject or other inappropriate recipients, convey information that might constitute unwarranted invasions of the personal privacy of other persons, unnecessarily burden law enforcement personnel in information-collection activities, and chill the willingness of witnesses to cooperate.

(9) From paragraphs (e)(4)(G) and (H) of this section because this system is exempt from the access and amendment provisions of paragraph (d) of this section.

(10) From paragraph (e)(4)(I) to the extent that this subsection could be interpreted to require more detail regarding system record sources than has been published in the **Federal Register**. Should this subsection be so interpreted, exemption from this provision is necessary to protect the sources of law enforcement and intelligence information and to protect the privacy and safety of witnesses and informants and other information sources. Further, greater specificity could compromise other sensitive law enforcement information, techniques, and processes.

(11) From subsection (e)(5) because the acquisition, collation, and analysis of information for law enforcement purposes from various agencies does not permit a determination in advance or a prediction of what information will be matched with other information and thus whether it is accurate, relevant, timely, and complete. With the passage of time, seemingly irrelevant or untimely information may acquire new significance as further investigation brings new details to light, and the accuracy of such information can often only be determined in a court of law. The restrictions imposed by subsection (e)(5) would restrict the ability of trained investigators, intelligence analysts, and government attorneys to exercise their judgment in collating and analyzing information and would impede the development of criminal or other intelligence necessary for effective law enforcement.

(12) From subsection (e)(8) because the individual notice requirements could present a serious impediment to law enforcement by revealing investigative techniques, procedures, evidence, or interest, and by interfering with the ability to issue warrants or subpoenas; could give persons sufficient warning to evade investigative efforts; and would pose an unacceptable administrative burden on the maintenance of these records and the conduct of the underlying investigations.

(13) From subsections (f) and (g) because these subsections are inapplicable to the extent that the system is exempt from other specific subsections of the Privacy Act.

Dated: November 7, 2013.

Joo Y. Chung,

Acting Chief Privacy and Civil Liberties Officer, United States Department of Justice.

[FR Doc. 2013–27130 Filed 11–20–13; 8:45 am]

BILLING CODE 4410–NY–P

POSTAL SERVICE

39 CFR Part 20

International Product and Price Changes

AGENCY: Postal Service ™

ACTION: Final rule.

SUMMARY: The Postal Service is revising *Mailing Standards of the United States Postal Service,* International Mail Manual (IMM®), to reflect the prices, product features, and classification changes to Competitive Services, as

established by the Governors of the Postal Service.

DATES: *Effective Date:* January 26, 2014.

FOR FURTHER INFORMATION CONTACT: Rick Klutts at 813–877–0372.

SUPPLEMENTARY INFORMATION: New prices are available under Docket Number CP2014–5 on the Postal Regulatory Commission's Web site at *http://www.prc.gov.*

This final rule describes the international price and classification changes and the corresponding mailing standards changes for the following Competitive Services:

- Global Express Guaranteed® (GXG®).
- Priority Mail Express International™.
- Priority Mail International®.
- First-Class Package International Service™.
- International Priority Airmail™ (IPA®).
- International Surface Air Lift® (ISAL®).
- Direct Sacks of Printed Matter to One Addressee (M-bags).
- International Extra Services:
  - Certificate of Mailing.
  - Registered Mail™ Service.
  - Return Receipt Service.
  - Pickup On Demand® Service.
- International Money Transfer Services:
  - Sure Money® (DineroSeguro®).

New prices are located on the Postal Explorer® Web site at *http://pe.usps.com.*

Global Express Guaranteed

Global Express Guaranteed (GXG) is an international expedited delivery service provided through an alliance with FedEx Express®. The price increase for GXG service averages 3.0 percent. The Commercial Base® price and Commercial Plus® price for customers that prepare and pay for GXG shipments via permit imprint, online at USPS.com®, or as registered end-users using an authorized PC Postage® vendor will remain a variable discount (based on the item's weight and price group) of up to 13 percent below the retail price for Commercial Base price and up to 20 percent below the retail price for Commercial Plus price. The price for GXG insurance is unchanged. In addition, the following product features and classification changes are made:

Commercial Base Price When Using Click-N-Ship for Business

To provide additional value, customers who prepare their GXG shipping label using Click-N-Ship for Business® and pay for the item's postage using their meter will be eligible to receive the applicable Commercial Base postage price. Such items paid with stamps, or if brought to a Postal Service retail counter for postage will continue to pay the retail price.

Priority Mail Express International

Priority Mail Express International service provides reliable, high-speed service to over 185 countries with a money-back, date-certain delivery guarantee to select destinations. The price increase for Priority Mail Express International service averages 1.3 percent. The Commercial Base price and Commercial Plus price for customers that prepare and pay for Priority Mail Express International shipments via permit imprint, online at USPS.com, or as registered end-users using an authorized PC Postage vendor will remain a variable discount (based on the item's weight and price group) of up to 11 percent below the retail price for Commercial Base price and up to 20 percent below the retail price for Commercial Plus price. The price for Priority Mail Express International insurance is unchanged. In addition, the following product features and classification changes are made:

Flat Rate Envelopes and Boxes

To provide additional incentives to commercial mailers who prepare items online, Commercial Base and Commercial Plus prices for Priority Mail Express International Flat Rate Envelopes and Flat Rate Boxes will be lower than the retail price. Currently, these flat-rated items are the same price regardless of price tier.

Commercial Base Price When Using Click-N-Ship for Business

To provide additional value, customers who prepare their Priority Mail Express International combined shipping and customs label using Click-N-Ship for Business and pay for the item's postage using their meter will be eligible to receive the applicable Commercial Base postage price. Such items paid with stamps, or if brought to a Postal Service retail counter for postage will continue to pay the retail price.

Mexico—Weight Limit Increase

For all price tiers, we are increasing the weight limit for Priority Mail Express International items sent to Mexico to 70 pounds.

Enhancements to Priority Mail Express International With Guarantee Service

Customers who prepare and pay for Priority Mail Express International With Guarantee service online with permit imprint, or PC Postage (including Click-N-Ship®) may be eligible for the date-certain postage refund. In addition, customers who prepare their Priority Mail Express International items using a combined shipping and customs label using Click-N-Ship for Business and pay for the item's postage using their meter, may also be eligible for the date-certain postage refund. Previously, a customer was required to present their item for mailing at a Postal Service retail counter to be eligible. This service is currently available to nine destination countries.

Priority Mail International

Priority Mail International offers economical prices for reliable delivery of documents and merchandise. The price increase for Priority Mail International service averages 1.1 percent. The Commercial Base price and Commercial Plus price for customers that prepare and pay for Priority Mail International items via permit imprint, online at USPS.com, or as registered end-users using an authorized PC Postage vendor will remain a variable discount (based on the item's weight and price group) of up to 13 percent below the retail price for Commercial Base price and up to 18 percent below the retail price for Commercial Plus price. The price for Priority Mail International insurance is unchanged. In addition, the following product features and classification changes are made:

Flat Rate Envelopes and Boxes

To provide additional incentives to commercial mailers who prepare items online, Commercial Base and Commercial Plus for Priority Mail International Flat Rate Envelopes and Flat Rate Boxes will be lower than the retail price. Currently, these flat-rated items are the same price regardless of price tier.

Commercial Base Price When Using Click-N-Ship for Business

To provide additional value, customers who prepare their Priority Mail International combined shipping and customs label using Click-N-Ship for Business and pay for the item's postage using their meter will be eligible to receive the applicable Commercial Base postage price. Such items paid with stamps, or if brought to a Postal Service retail counter for postage will continue to pay the retail price.

Minimum Size Requirement

We are changing the minimum size of a Priority Mail International parcel to stipulate that the surface area of the address side of the item to be mailed must be large enough to completely contain the postage, customs label, and

any other applicable endorsements or markings.

Mexico—Weight Limit Increase

For all price tiers, we are increasing the weight limit for Priority Mail International items sent to Mexico to 70 pounds.

Electronic USPS Delivery Confirmation International

The Postal Service is adding the following 12 countries for Electronic USPS® Delivery Confirmation ™ International (E–USPS DELCON INTL ™) service:

- Estonia
- Finland
- Gibraltar
- Hungary
- Italy
- Latvia
- Lithuania
- Luxembourg
- Malaysia
- Malta
- Portugal
- Singapore

First-Class Package International Service

First-Class Package International Service is our most affordable international service for small packages weighing up to 4 pounds and that do not exceed $400 in value. The price increase for retail First-Class Package International Service averages 0.8 percent. First-Class Package International Service Commercial Base and Commercial Plus prices will remain unchanged. The Commercial Base price and Commercial Plus price for customers that prepare and pay for First-Class Package International Service items via permit imprint, online at USPS.com, or as registered end-users using an authorized PC Postage vendor will remain a variable discount (based on the item's weight and price group) of up to 13 percent below the retail price for Commercial Base price and up to 19 percent below the retail price for Commercial Plus price. In addition, the following product features and classification changes are made:

Commercial Base Price When Using Click-N-Ship for Business

To provide additional value, customers who prepare their First-Class Package International Service combined shipping and customs label using Click-N-Ship for Business and pay for the item's postage using their meter will be eligible to receive the applicable Commercial Base postage price. Such items paid with stamps, or if brought to a Postal Service retail counter for postage, will continue to pay the retail price.

Electronic USPS Delivery Confirmation International

The Postal Service is adding the following 12 countries for Electronic USPS Delivery Confirmation International service:

- Estonia
- Finland
- Gibraltar
- Hungary
- Italy
- Latvia
- Lithuania
- Luxembourg
- Malaysia
- Malta
- Portugal
- Singapore

Package Pickup and Pickup on Demand Service

Beginning January 26, 2014, First-Class Package International Service items will be eligible for Package Pickup or Pickup On Demand service.

Global Expedited Package Services

The Postal Service will offer Global Expedited Package Services (GEPS) customized agreements to First-Class Package International Service customers pursuant to the terms and conditions stipulated between the Postal Service and a particular customer. This update will also be reflected in PS Form 3700, *Postage Statement—International Mail.*

International Priority Airmail

International Priority Airmail (IPA) service, including IPA M-bags, is a commercial service designed for business mailers for volume mailings of First-Class Mail International postcards, letters, large envelopes (flats), and First-Class Package International Service packages (small packets). Overall, prices for IPA will decrease by 2.5 percent.

In addition, the following product features and classification changes are made:

Clarify That Not All IPA Mail Is Flown to the Destination Country

With this final rule, the Postal Service clarifies that not all IPA mail is flown to the destination country. For example, USPS may use surface transportation for IPA mail destined to Canada or Mexico.

Price Groups

Price groups increase from 16 to 20 (includes Worldwide nonpresort).

Separation by Price Group

Price groups 1–14 will have shaped-based pricing and will be require separate containers (i.e., letter trays for postcards and letter-size pieces, flat trays for flat-size pieces, and sacks for package-size pieces.)

Weight Limits for Flat-Size and Package-Size Items

The Postal Service decreases the maximum weight for flat-size items from 4 pounds to 17.6 ounces; increases the maximum weight limit for package-size items from 4 pounds to 4.4 pounds; and, finally, for IPA M-bags contents, increases the combined weight of each printed matter mailpiece and the related articles from 4 pounds to 4.4 pounds. Letter-size pieces are unchanged and their maximum weight remains at 3.5 ounces.

Decrease the Minimum Weight for Direct Country Price Tier

To qualify for the direct country price tier, we will decrease the minimum weight for a direct country container from 3 pounds to 2 pounds.

Destination Countries of Cuba, Iran, North Korea, Sudan, and Syria

On May 7, 2012, we temporarily suspended IPA service to Cuba, Iran, North Korea, Sudan, and Syria. Effective January 26, 2014 we will make this change permanent until such time as export sanctions are removed or exports to these countries can be suitably monitored. First-Class Mail International service and First Class Package International Service remains available to send letter-post items to these destinations.

International Surface Air Lift

International Surface Air Lift (ISAL) service, including ISAL M-bags, is a commercial service, which provides dispatch and transportation for mailers of volume mailings of all First-Class Mail International postcards, letters, large envelopes (flats), and First-Class Package International Service packages (small packets). Overall, prices for ISAL will decrease by 2.9 percent.

In addition, the following product features and classification changes are made:

Clarify That Not All ISAL Mail Is Flown to the Destination Country

With this final rule, the Postal Service clarifies that not all ISAL mail is flown to the destination country. For example, USPS may use surface transportation for ISAL mail destined to Canada or Mexico.

Price Groups

Price groups increase from 16 to 20 (includes Worldwide nonpresort).

Separation by Price Group

Price groups 1–14 will have shaped-based pricing and will require separate containers (i.e., letter trays for postcards and letter-size pieces, flat trays for flat-size pieces, and sacks for package-size pieces.)

Weight Limits for Flat-Size and Package-Size Items

The Postal Service decreases the maximum weight for flat-size items from 4 pounds to 17.6 ounces; increases the maximum weight limit for package-size items from 4 pounds to 4.4 pounds; and, finally, for ISAL M-bags contents, increases the combined weight of each printed matter mailpiece and related articles from 4 pounds to 4.4 pounds. Letter-size pieces are unchanged and their maximum weight remains at 3.5 ounces.

Decrease the Minimum Weight for Direct Country Price Tier

To qualify for the direct country price tier, we will decrease the minimum weight for a direct country container from 3 pounds to 2 pounds.

Destination Countries of Cuba, Iran, Sudan, and Syria

On May 7, 2012, we temporarily suspended ISAL service to Cuba, Iran, Sudan, and Syria. Effective January 26, 2014 we will make this change permanent until such time as export sanctions are removed or exports to these countries can be suitably monitored. First-Class Mail International service and First Class Package International Service remains available to send letter-post items to these destinations.

Direct Sacks of Printed Matter to One Addressee (M-Bags)

Airmail M-bags are direct sacks of printed matter sent to a single foreign addressee at a single address. The price increase for Airmail M-bags averages 2.9 percent.

International Extra Services, Pick Up on Demand Service, and International Money Transfer Services

Depending on country destination and mail type, customers may add a variety of extra services to their outbound shipments. International competitive extra services, Pick Up on Demand service, and International Money Transfer services are updated as follows:

Certificate of Mailing

The prices for Certificate of Mailing will increase on average by 9.7 percent.

Customs Clearance and Delivery Fee

The price for *Customs Clearance and Delivery Fee* will increase by 9.1 percent.

Registered Mail

The price for Registered Mail will increase by 5.4 percent.

Return Receipt

The price for Return Receipt will increase 7.1 percent.

Pickup on Demand

The price for Pickup on Demand is unchanged. In addition, we will offer this service for First-Class Package International Service.

International Money Transfer Services

The prices for International Money Transfer Services which include International Postal Money Orders, Money Order Inquiry Fee, and Sure Money (DineroSeguro) are unchanged. In addition, on December 1, 2012, we temporarily suspended the maximum purchase limit, the refund limit, and the change of payee limit to $1,500 for Sure Money transactions. We are making these limits permanent effective January 26, 2014.

The Postal Service hereby adopts the following changes to *Mailing Standards of the United States Postal Service,* International Mail Manual (IMM), which is incorporated by reference in the *Code of Federal Regulations.* See 39 CFR 20.1.

List of Subjects in 39 CFR Part 20

Foreign relations, International postal services.

Accordingly, 39 CFR part 20 is amended as follows:

PART 20—[AMENDED]

■ 1. The authority citation for 39 CFR part 20 continues to read as follows:

Authority: 5 U.S.C. 552(a); 13 U.S.C. 301–307; 18 U.S.C. 1692–1737; 39 U.S.C. 101, 401, 403, 404, 407, 414, 416, 3001–3011, 3201–3219, 3403–3406, 3621, 3622, 3626, 3632, 3633, and 5001.

■ 2. Revise the following sections of *Mailing Standards of the United States Postal Service,* International Mail Manual (IMM), as follows:

***Mailing Standards of the United States Postal Service*, International Mail Manual (IMM)**

* * * * *

2 Conditions for Mailing

210 Global Express Guaranteed

* * * * *

213 Prices and Postage Payment Methods

* * * * *

[Revise the titles of 213.7 and 213.71 to read as follows:]

213.7 Online Methods

213.71 Online Prices—Commercial Base or Commercial Plus Prices

For selected destination countries, Global Express Guaranteed items qualify for discounted prices (equal to the Commercial Base price or Commercial Plus price) when mailers use one of the following online shipping methods:

[Revise item a to read as follows:]

a. Commercial Base Price: Click-N-Ship service using online postage; registered end-users of USPS-approved PC Postage products using online postage; or Click-N-Ship for Business using metered postage.

* * * * *

215 Mail Entry and Deposit

* * * * *

215.3 Pickup On Demand Service

* * * A pickup can include any or all of the following items:

[Revise the list to read as follows (to include First-Class Package International Service items):]

a. Global Express Guaranteed items.

b. Priority Mail Express International items.

c. Priority Mail International items.

d. First-Class Package International Service items.

e. Priority Mail Express items.

f. Priority Mail items.

g. Package Services items.

* * * * *

220 Priority Mail Express International

* * * * *

221 Description and Physical Characteristics

* * * * *

221.2 Priority Mail Express International With Guarantee Service

[Revise the introduction to read as follows:]

Priority Mail Express International With Guarantee service offers a date-certain, postage-refund guarantee. This service is available only to the following countries:

* * * * *

223 Prices and Postage Payment Methods

223.1 Prices

* * * * *

223.12 Commercial Base Prices

[Revise 223.12 to read as follows:]

A mailer who pays postage with a permit imprint under 223.222, or with the online methods described in 223.241, qualifies for the Priority Mail Express International Commercial Base prices, which are less than Priority Mail Express International retail prices.

* * * * *

223.2 Postage Payment Methods

* * * * *

[Revise the titles of 223.24 and 223.241 to read as follows:]

223.24 Online Methods

223.241 Online Prices—Commercial Base or Commercial Plus Prices

For selected destination countries, Priority Mail Express International items qualify for discounted prices (equal to the Commercial Base price or Commercial Plus price) when mailers use one of the following online shipping methods:

[Revise item a to read as follows:]

a. Commercial Base Price: Click-N-Ship service using online postage; registered end-users of USPS-approved PC Postage products using online postage; or Click-N-Ship for Business using metered postage.

* * * * *

225 Mail Entry and Deposit

* * * * *

225.2 Pickup On Demand Service

* * * A pickup can include any or all of the following items:

[Revise the list to read as follows (to include First-Class Package International Service items):]

a. Global Express Guaranteed items.

b. Priority Mail Express International items.

c. Priority Mail International items.

d. First-Class Package International Service items.

e. Priority Mail Express items.

f. Priority Mail items.

g. Package Services items.

* * * * *

230 Priority Mail International

231 Description and Physical Characterizes

* * * * *

231.2 Physical Characteristics

* * * * *

231.22 Dimensions—Priority Mail International Parcels

* * * * *

The minimum and maximum dimensions for Priority Mail International parcels are as follows:

[Revise item a to read as follows:]

a. For Priority Mail International parcels, the surface area of the address side of the item to be mailed must be large enough to completely contain the postage, customs label and envelope (PS Form 2976–E), and any other applicable endorsements or markings. The PS Form 2976–E is approximately 7¼ inches high and 10¼ inches long.

* * * * *

232 Eligibility

232.1 Priority Mail International Flat Rate Envelopes and Small Flat Rate Priced Boxes

* * * * *

232.12 Electronic USPS Delivery Confirmation International

* * * * *

232.122 Availability

[Revise the last sentence and add Exhibit 231.122 to read as follows:]

* * * The service is available only to the countries listed in Exhibit 231.122:

Exhibit 231.122 Country Availability

Country Name

Australia
Belgium
Brazil
Canada
Croatia
Denmark
Estonia
Finland
France
Germany
Gibraltar
Great Britain and Northern Ireland
Hungary
Israel
Italy
Latvia
Lithuania
Luxembourg
Malaysia
Malta
Netherlands
New Zealand
Portugal
Singapore
Spain
Switzerland

* * * * *

233 Prices and Postage Payment Methods

233.1 Prices

* * * * *

233.12 Commercial Base Prices

[Revise 233.12 to read as follows:]

A mailer who pays postage with a permit imprint under 233.222, or with the online methods described in 233.231, qualifies for the Priority Mail International Commercial Base prices, which are less than Priority Mail International retail prices. See Notice 123, *Price List,* for the applicable price.

* * * * *

233.2 Postage Payment Methods

* * * * *

[Revise the titles of 233.23 and 233.231 to read as follows:]

233.23 Online Methods

233.231 Online Prices—Commercial Base or Commercial Plus Prices

For selected destination countries, Priority Mail International items qualify for discounted prices (equal to the Commercial Base price or Commercial Plus price) when mailers use one of the following online shipping methods:

[Revise item a to read as follows:]

a. Commercial Base Price: Click-N-Ship service using online postage; registered end-users of USPS-approved PC Postage products using online postage; or Click-N-Ship for Business using metered postage.

* * * * *

235 Mail Entry and Deposit

* * * * *

235.2 Pickup On Demand Service

* * * A pickup can include any or all of the following items:

[Revise the list to read as follows (to include First-Class Package International Service items):]

a. Global Express Guaranteed items.

b. Priority Mail Express International items.

c. Priority Mail International items.

d. First-Class Package International Service items.

e. Priority Mail Express items.

f. Priority Mail items.

g. Package Services items.

* * * * *

250 First-Class Package International Service

* * * * *

252 Eligibility

* * * * *

252.2 Electronic USPS Delivery Confirmation International

* * * * *

252.22 Availability

[Revise the last sentence and add Exhibit 252.22 to read as follows:]

* * * The service is available only to the countries listed in Exhibit 252.22:

Country Name
Australia
Belgium
Brazil
Canada
Croatia
Denmark
Estonia
Finland
France
Germany
Gibraltar
Great Britain and Northern Ireland
Hungary
Israel
Italy
Latvia
Lithuania
Luxembourg
Malaysia
Malta
Netherlands
New Zealand
Portugal
Singapore
Spain
Switzerland

* * * * *

253 Prices and Postage Payment Methods

* * * * *

253.2 Postage Payment Methods

* * * * *

[Revise the titles of 253.23 and 253.231 to read as follows:]

253.23 Online Methods

253.231 Online Prices—Commercial Base or Commercial Plus Prices

For selected destination countries, First-Class Package International Service items qualify for discounted prices (equal to the Commercial Base price or Commercial Plus price) when mailers use one of the following online shipping methods:

[Revise item a to read as follows:]

a. Commercial Base Price: Click-N-Ship service using online postage; registered end-users of USPS-approved PC Postage products using online postage; or Click-N-Ship for Business using metered postage.

* * * * *

255 Mail Entry and Deposit

255.1 Place of Mailing

255.11 Items Eligible for Deposit or Pickup

First-Class Package International Service items bearing a computer-generated customs form with customs data that has been electronically transmitted (e.g., using Click-N-Ship service, an authorized PC Postage vendor, or the USPS Web Tools system) may be deposited through any of the following methods, provided postage is paid by a means other than the use of postage stamps:

[Revise the list to read as follows (to include Pickup on Demand service and Package Pickup service):]

a. In a private mailbox bearing a return address that matches the address at the point of pick up, when the customer or business is known to reside or do business at that location.

b. Through Pickup on Demand service.

c. Through Package Pickup service.

d. At a Postal Service retail counter.

e. Into a Postal Service lobby drop.

f. In a collection box.

g. At a Contract Postal Unit (CPU).

h. At a USPS Approved Shipper location.

* * * * *

[Insert new 255.3 and 255.4 to read as follows:]

255.3 Pickup On Demand Service

Subject to the standards in 255.1, Pickup On Demand service is available for First-Class Package International Service items. There is a single charge for Pickup On Demand service (see Notice 123, *Price List*), regardless of the number of items scheduled for pickup. A pickup can include any or all of the following items:

a. Global Express Guaranteed items.

b. Priority Mail Express International items.

c. Priority Mail International items.

d. First-Class Package International Service items.

e. Priority Mail Express items.

f. Priority Mail items.

g. Package Services items.

255.4 Package Pickup Service

No pickup fee will be charged when a First-Class Package International Service item or items are picked up during a letter carrier's regular delivery stop or during a scheduled stop made to collect other mail not subject to a pickup fee. Pickup service is provided in accordance with the information in DMM 507.7; for more information, also visit the online site at *usps.com/pickup.*

260 Direct Sacks of Printed Matter to One Addressee (M-bags)

261 Description

* * * * *

261.2 Eligibility

* * * * *

261.22 Other Articles

Certain other articles may be enclosed in M-bags, provided that all of the following conditions of mailing are met:

* * * * *

[Revise item d to read as follows:]

d. For Airmail M-bags, the combined weight of each printed matter mailpiece and the related articles may not exceed 4 pounds. For IPA and ISAL M-bags, the combined weight of each printed matter mailpiece and the related articles may not exceed 4.4 pounds.

* * * * *

290 Commercial Services

* * * * *

292 International Priority Airmail (IPA) Service

292.1 Description

292.11 General

[Revise 292.11 to read as follows:]

International Priority Airmail (IPA) service, including IPA M-bags, is a commercial service designed for volume mailings of all First-Class Mail International postcards, letters, and large envelopes (flats), and for volume mailings of First-Class Package International Service packages (small packets). The sender must prepare mailpieces in accordance with the requirements of this subchapter and with the shape-based requirements of the applicable service—either First-Class Mail International items (see 240) and/or First-Class Package International Service items (see 250). IPA shipments are typically flown to the foreign destinations (exceptions apply to Canada and Mexico) and are then entered into that country's air or surface priority mail system for delivery. Separate prices are provided for International Service Center (ISC) drop shipments, presorted mail, and worldwide nonpresort mail. Volume incentives are available through customized agreements.

* * * * *

292.2 Eligibility

292.21 Qualifying Mailpieces

[Revise 292.21 to read as follows:]

To qualify for IPA service, a mailpiece must meet the First-Class Mail International characteristics as defined in 141.5 (except for weight—see 292.24) or the First-Class Package International Service characteristics as defined in 141.6 (except for weight—see 292.24). Mailpieces do not have to be of the same size and weight to qualify. Any item sent with IPA service must conform to the size limits for First-Class Mail International postcards, letters, or large

envelopes (flats) as described in 240, or for First-Class Package International Service packages (small packets) as described in 250.

292.22 Availability

[Revise 292.22 to read as follows:]

IPA service is available only to the foreign countries that are listed in Exhibit 292.45, which shows the price group and the foreign office of exchange code assigned to each country.

292.23 Minimum Quantity Requirements

* * * * *

292.232 Presort Eligibility—Full-Service

[Revise the first sentence to read as follows:]

Only a direct country container with a minimum of 2 pounds qualifies for the presort price. * * *

292.233 Presort Eligibility—ISC Drop Shipment

[Revise the first sentence to read as follows:]

Only a direct country container with a minimum of 2 pounds or a mixed country container with a minimum of 5 pounds qualifies for the presort price. * * *

[Insert new 292.24 to read as follows (renumbering current 292.24 through 292.26 to be 292.25 through 292.27):]

292.24 Maximum Weight Limits

The maximum weight for an IPA container is 66 pounds. The maximum weight for an individual IPA item is as follows:

a. Letter-size item: 3.5 ounces.

b. Flat-size item: 17.6 ounces.

c. Package-size item: 4.4 pounds

* * * * *

292.3 Prices and Postage Payment Methods

292.31 Prices

[Revise the first sentence to read as follows:]

IPA service has two price options: a presort price with 19 price groups, and a worldwide nonpresort price. * * *

* * * * *

292.4 Mail Preparation

* * * * *

[Revise 292.45 through 292.47 in their entirety to read as follows:]

292.45 IPA Price Groups and Foreign Office of Exchange Codes

See Exhibits 292.45a and 292.45b for the IPA Country Price Groups and Foreign Office of Exchange Codes.

Exhibit 292.45a

IPA Country Price Groups and Foreign Office of Exchange Codes for All Countries Other Than Canada

Country labeling name	Foreign office of exchange code	Price group
Afghanistan	KBL	19
Albania	TIA	16
Algeria	ALG	19
Andorra, via Spain	MAD	15
Angola	LAD	19
Anguilla	AXA	17
Antigua and Barbuda	ANU	17
Argentina	BUE	10
Armenia	EVN	19
Aruba	AUA	17
Ascension, via Great Britain	LAL	16
Australia [1]	SYD	9
Austria	VIE	12
Azerbaijan	BAK	19
Bahamas	NAS	17
Bahrain	BAH	19
Bangladesh	DAC	19
Barbados	BGI	17
Belarus	MSQ	16
Belgium	BRU	12
Belize	BZE	17
Benin	COO	19
Bermuda	SGE	17
Bhutan, via Great Britain	LAL	19
Bolivia	LPB	17
Bosnia-Herzegovina	SJJ	16
Botswana	GBE	19
Brazil	CWB	10
British Virgin Islands	RAD	17
Brunei Darussalam	BWN	18
Bulgaria	SOF	16
Burkina Faso	OUA	19
Burma (Myanmar)	RGN	19
Burundi	BJM	19
Cambodia	PNH	18
Cameroon	DLA	19
Canada	See Canadian Labeling Information in Exhibit 292.45b.	1
Cape Verde	RAI	19
Cayman Islands	GCM	17
Central African Republic	BGF	19
Chad	NDJ	19
Chile	SCL	17
China	BJS	14
Colombia	BOG	17

IPA COUNTRY PRICE GROUPS AND FOREIGN OFFICE OF EXCHANGE CODES FOR ALL COUNTRIES OTHER THAN CANADA—Continued

Country labeling name	Foreign office of exchange code	Price group
Comoros Islands, via France	CDG	19
Congo, Dem. Rep. of the	FIH	19
Congo, Rep. of the	BZV	19
Cook Islands	RAR	9
Costa Rica	SJO	17
Cote d'Ivoire	ABJ	19
Croatia	ZAG	16
Curacao (includes Bonaire, Saba, and Sint Eustatius)	CUR	17
Cyprus	LCA	19
Czech Republic	PRG	16
Denmark	CPH	12
Djibouti	JIB	19
Dominica	DOM	17
Dominican Republic	SDQ	17
Ecuador	UIO	17
Egypt	CAI	19
El Salvador	SAL	17
Equatorial Guinea	SSG	19
Eritrea	ASM	19
Estonia	TLL	16
Ethiopia	ADD	19
Falkland Islands, via Great Britain	LAL	17
Faroe Islands, via Denmark	CPH	16
Fiji	NAN	18
Finland	HEL	12
France [2]	CDG	5
French Guiana	CAY	17
French Polynesia	FAA	18
Gabon	LBV	19
Gambia	BJL	19
Georgia, Republic of	TBS	19
Germany	FRA	4
Ghana	ACC	19
Gibraltar	GIB	15
Great Britain (includes England, Scotland, Wales, Northern Ireland, Guernsey, Jersey, Alderney, Sark, and The Isle of Man).	LAL	3
Greece	ATH	13
Greenland, via Denmark	CPH	15
Grenada	GND	17
Guadeloupe	PTP	17
Guatemala	GUA	17
Guinea	CKY	19
Guinea-Bissau	OXB	19
Guyana	GEO	17
Haiti	PAP	17
Honduras	TGU	17
Hong Kong	HKG	11
Hungary	BUD	16
Iceland	REK	15
India	DEL	14
Indonesia	JKT	18
Iraq	BGW	19
Ireland	DUB	13
Israel	TLV	13
Italy	MIL	7
Jamaica	KIN	17
Japan	NRT	6
Jordan	AMM	19
Kazakhstan	ALA	19
Kenya	NBO	19
Kiribati	TRW	18
Korea, Republic of (South)	SEL	11
Kosovo, Republic of	PRN	16
Kuwait	KWI	19
Kyrgyzstan	FRU	16
Laos	VTE	18
Latvia	RIX	16
Lebanon	BEY	19
Lesotho	MSU	19
Liberia	MLW	19

IPA COUNTRY PRICE GROUPS AND FOREIGN OFFICE OF EXCHANGE CODES FOR ALL COUNTRIES OTHER THAN CANADA—Continued

Country labeling name	Foreign office of exchange code	Price group
Libya	TIP	19
Liechtenstein, via Switzerland	ZRH	15
Lithuania	VNO	16
Luxembourg	LUX	15
Macao	MFM	16
Macedonia	FRA	16
Madagascar	TNR	19
Malawi	LBE	19
Malaysia	KUL	18
Maldives	MLE	19
Mali	BKO	19
Malta	MAR	19
Martinique	FDF	17
Mauritania	NKC	19
Mauritius	PLU	19
Mexico	MEX	2
Moldova	KIV	19
Monaco	MON	12
Mongolia	ULN	18
Montenegro	TGD	17
Montserrat	MNI	17
Morocco	CAS	19
Mozambique	MPM	19
Namibia	WDH	19
Nauru	INU	18
Nepal	KTM	18
Netherlands	AMS	12
New Caledonia	NOU	18
New Zealand [3]	AKL	9
Nicaragua	MGA	17
Niger	NIM	19
Nigeria	LOS	19
Norway	OSL	12
Oman	MCT	19
Pakistan	ISB	19
Panama	PTY	17
Papua New Guinea	BOR	18
Paraguay	ASU	17
Peru	LIM	17
Philippines	MNL	14
Pitcairn Island, via New Zealand	AKL	18
Poland	WAW	12
Portugal (includes Azores and Madeira Islands)	LIS	13
Qatar	DOH	19
Reunion	RUN	19
Romania	BUH	16
Russia	MOW	16
Rwanda	KGL	19
Saint Christopher and Nevis	SKB	17
Saint Helena, via Great Britain	LAL	19
Saint Lucia	SLU	17
Saint Pierre and Miquelon, via Canada	See Canadian Labeling Information in Exhibit 292.45b.	17
Saint Vincent and The Grenadines	KTN	17
San Marino, via Italy	MIL	12
Sao Tome and Principe, via Portugal	LIS	16
Saudi Arabia	DMM	19
Senegal	DKR	19
Serbia, Republic of	BEG	16
Seychelles	SEZ	19
Sierra Leone	FNA	19
Singapore	SIN	11
Sint Maarten	SXM	17
Slovak Republic (Slovakia)	BTS	16
Slovenia	LJU	13
Solomon Islands	HIR	18
South Africa	JNB	14
Spain (includes Canary Islands)	MAD	8
Sri Lanka	CMB	19
Suriname	PBM	17

IPA COUNTRY PRICE GROUPS AND FOREIGN OFFICE OF EXCHANGE CODES FOR ALL COUNTRIES OTHER THAN CANADA—Continued

Country labeling name	Foreign office of exchange code	Price group
Swaziland	MTS	19
Sweden	STO	12
Switzerland	ZRH	12
Taiwan	TPE	14
Tajikistan	DYU	19
Tanzania	DAR	19
Thailand	BKK	14
Timor-Leste, Democratic Republic of	DIL	18
Togo	LFW	19
Tonga	TBU	18
Trinidad and Tobago	POS	17
Tristan da Cunha, via South Africa	JNB	19
Tunisia	TUN	19
Turkey	IST	16
Turkmenistan	ASB	16
Turks and Caicos Islands	GDT	17
Tuvalu, via Fiji	NAN	18
Uganda	KLA	19
Ukraine	IEV	19
United Arab Emirates	DXB	19
Uruguay	MVD	17
Uzbekistan	TAS	19
Vanuatu	VLI	18
Vatican City	VAT	15
Venezuela	CCS	17
Vietnam	SGN	18
Wallis and Futuna Islands, via New Caledonia	NOU	18
Western Samoa	APW	18
Yemen	SAH	19
Zambia	LUN	19
Zimbabwe	HRE	19

[1] At the mailer's option, a finer sortation for IPA items addressed to Australia may be used. If this option is chosen, items addressed with postal codes beginning with 0, 1, 2, 4, and 9 and uncoded mail should be sorted and prepared in direct country containers tagged to Sydney. Both the three-letter exchange office code (''SYD'') and the country name (''Australia'') should be entered in the ''To'' block of PS Tag 115, *International Priority Airmail.* Items addressed with postal codes beginning with 3, 5, 6, 7, and 8 should be sorted and prepared in direct country containers tagged to Melbourne. Both the three-letter exchange office code (''MEL'') and the country name (''Australia'') should be entered in the ''To'' block of PS Tag 115.

[2] For all destinations to France other than Monaco. For Monaco, see the entry for Monaco in this exhibit.

[3] For all destinations to New Zealand other than Cook Islands. For Cook Islands, see the entry for Cook Islands in this exhibit.

Exhibit 292.45b

CANADIAN MAIL CONTAINER LABELING INFORMATION

[Full-service only]

ZIP Code of entry post office *	Canadian destination	U.S. exchange office code	U.S. exchange office (or ISC)	Foreign office of exchange code
005, 010–089, 100–212, 214–268, 270–297, 400–418, 420–427, 470–471, 476–477.	MONTREAL QC FWD	003	JFK	YMQ.
006–009, 298–339, 341–342, 344, 346–347, 349–352, 354–399, 723.	MONTREAL QC FWD	33112	MIA	YMQ.
430–469, 472–475, 478–516, 520–528, 530–532, 534–535, 537–551, 553–567, 570–577, 580–588, 600–620, 622–631, 633–641, 644–658, 660–662, 664–681, 683–693, 700–701, 703–708, 710–714, 716–722, 724–731, 733–741, 743–816, 822–831, 840–847, 870–875, 877–885, 893, 897–898.	TORONTO ON FWD	60290	ORD	For IPA letter-size and flat-size: TOR. For IPA packages-size: YTO.
590–599, 820–821, 832–838, 894–895, 937–961, 970–986, 988–999.	VANCOUVER BC FWD	94013	SFO	YVR.
850–853, 855–857, 859–860, 863–865, 889–891, 900–908, 910–928, 930–936.	VANCOUVER BC FWD	90899	LAX	YVR.
967–969	VANCOUVER BC FWD	96820	HNL	YVR.

* The ''ZIP Code of Entry Post Office'' column is relevant only for mailings claimed at the full-service price (i.e., not drop shipped at an ISC) to determine their Canadian destination and U.S. exchange office code container information.

292.46 Presort Mailings: Direct Country—Price Groups 1 Through 14

292.461—General

Price groups 1 through 14 may be prepared in direct country containers (full-service price and ISC drop shipment price). Each direct country container must contain at least 2 pounds of mail. The mailer must separately containerize items bearing customs forms from items not bearing customs forms and must prepare letter-size, flat-size, and package-size items in separate containers as defined in 292.462a through 292.462c. Smaller quantities qualify only for mixed country price (price groups 9 through 14 only) under 292.47, or for the worldwide nonpresort price under 292.49. The maximum container weight is 66 pounds.

292.462 Preparation

The mailer must prepare direct country containers of presorted IPA mail (full-service price and ISC drop shipment price) as follows:

a. *Letter-Size and Flat-Size Mail.* For each direct country tray of letter-size or flat-size mail, the mailer must do the following:

1. *Mail Preparation.* Prepare letter-size items in letter trays, either 1-foot or 2-foot, depending on volume. Prepare flat-size items in flat trays/tubs. Do not prepare the content of trays in bundles. Face all letter-size items and flat-size items in the same direction. Ensure that all trays are full enough to keep the mail from mixing during transportation. Cover (i.e., sleeve or lid) all letter-size and flat-size trays and secure them with strapping.

2. *Container Tags.* Complete the front side of PS Tag 115, *International Priority Airmail,* which identifies the mail to ensure it receives priority handling. Check the appropriate box to indicate if the tray contains items *with* or *without* customs forms, identify the destination country, and enter the date of mailing, the 10-digit permit number, the foreign office of exchange code as listed in Exhibit 292.45a and 292.45b, and the price group as listed in Exhibit 292.45a and 292.45b. To the front side of the tag, apply a barcode that indicates the mailer's permit number, the product code, the service type code, the container type code, the mail contents shape type code, the foreign office of exchange code, and the serial number of the container. (To request technical specifications for the barcode, send an email to *globalbusiness-sales@usps.gov*). Finally, tape PS Tag 115 to the tray cover.

b. *Packages.* For each direct country sack of package-size items, the mailer must do the following:

1. *Mail Preparation.* Prepare package-size items by placing them loose in sacks.

2. *Tags. Container Tags.* Complete the front side of PS Tag 115, *International Priority Airmail,* which identifies the mail to ensure it receives priority handling. Check the appropriate box to indicate if the container contains items *with* or *without* customs forms, identify the destination country, and enter the date of mailing, the 10-digit permit number, the foreign office of exchange code as listed in Exhibit 292.45a and 292.45b, and the price group as listed in Exhibit 292.45a and 292.45b. To the front side of the tag, apply a barcode that indicates the mailer's permit number, the product code, the service type code, the container type code, the shape type code, the foreign office of exchange code, and the serial number of the container. (To request technical specifications for the barcode, send an email to *globalbusiness-sales@usps.gov*). Finally, attach PS Tag 115 to the neck of the sack.

3. *Direct Country Container Label.* A mailer who claims the ISC drop shipment price and enters the mail at an authorized drop shipment location under 292.532 is not required to prepare container labels. A mailer who claims the full-service price must complete 2-inch container labels (and insert them into the applicable container label holder) as follows (see Exhibit 292.462 for the list of U.S. Exchange Offices):

Line 1: Appropriate U.S. Exchange Office and Routing Code

Line 2: Contents—DRX COUNTRY

Line 3: Mailer, Mailer Location

Example: ISC NEW YORK NY 003, IPA—DRX COUNTRY, ABC STORE ALBANY NY.

Exhibit 292.462

LABELING OF IPA MAIL TO POSTAL SERVICE EXCHANGE OFFICES

[Full-service only]

IPA Acceptance office 3-Digit ZIP Code Prefix	U.S. exchange office and routing code for line 1
005, 010–089, 100–212, 214–268, 270–297, 400–418, 420–427, 470–477	ISC NEW YORK NY 003.
006–009, 298–339, 341–342, 344, 346–347, 349–352, 354–399	ISC MIAMI FL 33112.
424, 430–469, 478–516, 520–528, 530–532, 534–535, 537–551, 553–567, 570–577, 580–588, 600–620, 622–631, 633–641, 644–658, 660–662, 664–681, 683–693, 700–701, 703–708, 710–714, 716–731, 733–741, 743–799, 885.	ISC CHICAGO IL 60290.
590–599, 800–816, 820–838, 840–847, 893–895, 897–898, 937–961, 970–986, 988–999	ISC SAN FRANCISCO CA 94013.
850–853, 855–857, 859–860, 863–865, 870–875, 877–884, 889–891, 900–908, 910–928, 930–936	ISC LOS ANGELES CA 900.
967–969	P&DC HONOLULU HI 967.

292.47 Presort Mailings: Mixed Country—Price Groups 9 Through 14

292.471 General

The mailer may prepare price groups 9 through 14 in mixed country containers (ISC drop shipment price) only after all possible direct country containers have been prepared. Each mixed country price group must contain at least 5 pounds of mail that are destined within the same price group. The mailer must separately containerize items bearing customs forms from items not bearing customs forms and must prepare letter-size, flat-size, and package-size items in separate containers as defined in 292.472a and 292.472b. Smaller quantities qualify only for the worldwide nonpresort price under 292.49. The maximum container weight is 66 pounds.

292.472 Preparation

The mailer must prepare mixed country containers of presorted IPA mail (ISC drop shipment price) as follows:

a. *Letter-Size and Flat-Size Mail.* For each mixed country tray of letter-size or flat-size mail, the mailer must do the following:

1. *Mail Preparation.* Prepare letter-size items in letter trays, either 1-foot or 2-foot, depending on volume. Prepare flat-size items in flat trays/tubs. Bundle letter-size and flat-size pieces as defined in 292.44, and bundle each country separately. Face all letter-size items and

flat-size items in the same direction and apply a label (facing slip) to the top item as defined in 292.473. Cover (i.e., sleeve or lid) all letter-size trays and flat-size trays/tubs and secure them with strapping.

2. *Container Tags.* Complete the front side of PS Tag 115, *International Priority Airmail,* which identifies the mail to ensure it receives priority handling. Identify the date of mailing, the 10-digit permit number, and the price group as listed in Exhibit 292.45a or 292.45b followed by the word ''Mixed'' (e.g., ''14–Mixed''). Finally, tape PS Tag 115 to the tray cover.

b. *Packages.* For each mixed country container of package-size items, the mailer must do the following:

1. *Mail Preparation.* Prepare package-size items by placing them loose in sacks.

2. *Container Tags.* Complete the front side of PS Tag 115, *International Priority Airmail,* which identifies the mail to ensure it receives priority handling. Identify the date of mailing, the 10-digit permit number, and the price group as listed in Exhibit 292.45a or 292.45b followed by the word ''Mixed'' (e.g., ''14–Mixed''). Finally, attach PS Tag 115 to the neck of the sack.

292.473 Direct Country Bundle Label for Mixed Country Containers

Only letter-size and flat-size direct country bundles prepared for mixed country containers require a label (facing slip). The mailer must complete the label and place it on the address side of the top item of each bundle in such a manner that it will not become separated from the bundle. The pressure-sensitive labels and optional endorsement lines used domestically for presort mail are prohibited for IPA service. Bundle labels must contain the following information:

Line 1: Foreign Office of Exchange Code. (See Exhibit 292.45a and 292.45b.)

Line 2: Country Labeling Name. (See Exhibit 292.45a and 292.45b.)

Line 3: Mailer, Mailer Location (City and State).

Example: VIE, AUSTRIA, ABC COMPANY WASHINGTON DC.

[Insert new 292.48 and 292.49 to read as follows:]

292.48 Presort Mailings—Price Groups 15 Through 19

292.481 General

Price groups 15 through 19 must be prepared in direct country containers (full-service price and ISC drop shipment price) or mixed country containers (ISC drop shipment price). Each direct country container must contain at least 2 pounds of mail. Each mixed country container must contain at least 5 pounds of mail. Smaller quantities qualify only for the worldwide nonpresort price under 292.49. The mailer must separately containerize items bearing customs forms from items not bearing customs forms. The maximum container weight is 66 pounds.

292.482 Preparation

The mailer has two options to prepare direct country or mixed country containers of presorted IPA mail, as follows:

1. Prepare mail as described in 292.46 and 292.47, including using letter-size trays for letter-size items, flat-size trays/tubs for flat-size items, and sacks for package-size items.

2. Prepare mail in sacks for all processing categories as defined in 292.483 and 292.484.

292.483 Direct Country—Optional Sack Preparation

The mailer may optionally prepare direct country sacks or mixed country sacks of presorted IPA mail when sacks are used for all processing categories as follows:

a. *Full-Service and ISC Drop Shipment—Direct country sacks.*

1. *Preparation.* Mail (letter-size, flat-size, and package-size) that is addressed to an individual country and that contains 2 pounds or more must be sorted into direct country sacks. Mail that cannot be made up into direct country sacks must be prepared and entered as mixed country sacks (ISC Drop Shipment only) or the worldwide nonpresort price. The mailer must bundle letter-size and flat-size items as defined in 292.44. The mailer must bundle letter-size items and flat-size items separately, although nonidentical items may be commingled within each of these categories. Face all letter-size items and flat-size items in the same direction and apply a label (facing slip) to the top item as defined in 292.472. Place package-size items loose in the sack provided that items bearing customs forms are separated from items not bearing customs forms.

2. *Container Tags.* The mailer must complete the front side of PS Tag 115, *International Priority Airmail,* which identifies the mail to ensure it receives priority handling. The mailer must check the appropriate box to indicate if the sack contains items *with* or *without* customs forms, identify the destination country, and enter the date of mailing, the 10-digit permit number, the foreign office of exchange code as listed in Exhibits 292.45a and 292.45b, and the price group as listed in Exhibits 292.45a and 292.45b. The mailer must apply a barcode to the front side of the tag that indicates the mailer's permit number, the product code, the service type code, the container type, the shape type, the foreign office of exchange code, and the serial number of the sack. (To request technical specifications for the barcode, send an email to *globalbusiness-sales@usps.gov*). Finally, the mailer must attach PS Tag 115 to the neck of the sack.

3. *Direct Country Container Label.* A mailer who claims the ISC drop shipment price and enters the mail at an authorized drop shipment location under 292.532 is not required to prepare container labels. A mailer who claims the full-service price must complete 2-inch container labels (and insert them into the applicable container label holder) as follows (see Exhibit 292.483 for the list of U.S. Exchange Offices):

Line 1: Appropriate U.S. Exchange Office and Routing Code

Line 2: Contents—DRX COUNTRY

Line 3: Mailer, Mailer Location

Example: ISC NEW YORK NY 003, IPA—DRX COUNTRY, ABC STORE ALBANY NY.

Exhibit 292.483

LABELING OF IPA MAIL TO POSTAL SERVICE EXCHANGE OFFICES

[Full-service only]

IPA acceptance office 3-digit ZIP Code prefix	U.S. exchange office and routing code for line 1
005, 010–089, 100–212, 214–268, 270–297, 400–418, 420–427, 470–477	ISC NEW YORK NY 003.
006–009, 298–339, 341–342, 344, 346–347, 349–352, 354–399	ISC MIAMI FL 33112.

LABELING OF IPA MAIL TO POSTAL SERVICE EXCHANGE OFFICES—Continued

[Full-service only]

IPA acceptance office 3-digit ZIP Code prefix	U.S. exchange office and routing code for line 1
424, 430–469, 478–516, 520–528, 530–532, 534–535, 537–551, 553–567, 570–577, 580–588, 600–620, 622–631, 633–641, 644–658, 660–662, 664–681, 683–693, 700–701, 703–708, 710–714, 716–731, 733–741, 743–799, 885.	ISC CHICAGO IL 60290.
590–599, 800–816, 820–838, 840–847, 893–895, 897–898, 937–961, 970–986, 988–999	ISC SAN FRANCISCO CA 94013.
850–853, 855–857, 859–860, 863–865, 870–875, 877–884, 889–891, 900–908, 910–928, 930–936	ISC LOS ANGELES CA 900.
967–969	P&DC HONOLULU HI 967.

b. *ISC Drop Shipment—Mixed country sacks.*

1. *Preparation.* Mixed country sacks can be prepared only after all possible direct country sacks have been prepared. The mailer must prepare mixed country sacks for items that contain 5 pounds or more and that are destined within the same price group. Mail that ultimately cannot be made up into direct country sacks or mixed country sacks must be prepared and entered at the worldwide nonpresort price. The mailer must bundle letter-size and flat-size items as defined in 292.44. The mailer must bundle letter-size and flat-size items separately, although nonidentical items may be commingled within each of these categories. Face all letter-size items and flat-size items in the same direction and apply a label (facing slip) to the top item as defined in 292.484. Place package-size items that cannot be bundled because of their physical characteristics loose in the sack provided that items bearing customs forms are separated from items not bearing customs forms.

2. *Container Tags.* The mailer must complete the front side of PS Tag 115, *International Priority Airmail,* which identifies the mail to ensure it receives priority handling. On the front of the tag, the mailer must identify the date of mailing, the 10-digit permit number, and the price group as listed in Exhibit 292.45a or 292.45b followed by the word ''Mixed'' (e.g., ''15–Mixed''). Finally, the mailer must attach PS Tag 115 to the neck of the sack.

292.484 Presorted Mail—Direct Country Bundle Label

Only letter-size and flat-size direct country bundles prepared for mixed country sacks require a label (facing slip). The mailer must complete the label and place it on the address side of the top item of each bundle in such a manner that it will not become separated from the bundle. The pressure-sensitive labels and optional endorsement lines used domestically for presort mail are prohibited for IPA service. Bundle labels must contain the following information:

Line 1: Foreign Office of Exchange Code. (See Exhibits 292.45a and 292.45b.)

Line 2: Country Labeling Name. (See Exhibits 292.45a and 292.45b.)

Line 3: Mailer, Mailer Location (City and State).

Example: VIE, AUSTRIA, ABC COMPANY WASHINGTON DC.

292.49 Worldwide Nonpresort Preparation

The following standards apply when the mailer prepares worldwide nonpresort IPA mail (full-service price and ISC drop shipment price):

a. *General.* A mailer claiming any mail at the direct country or mixed country price cannot enclose the mail in worldwide nonpresort sacks. The mailer must bundle letter-size and flat-size mail. All types of mail, including letter-size bundles, flat-size bundles, and loose items, can be commingled in the same sack. Labels (facing slips) are not required on any bundles. Containers other than sacks are not authorized unless other equipment is specified by the acceptance office—for example, the mailer may present nonpresorted letter-size mail in trays if authorized by the acceptance office. The maximum weight of any container is 66 pounds.

b. *Worldwide Nonpresort Container Label.* A mailer who claims the ISC drop shipment price and enters the mail at an authorized drop shipment location under 292.532 is not required to prepare container labels. A mailer who claims the full-service price must complete 2-inch container labels (and insert them into the applicable container label holder) as follows (see Exhibit 292.483 for the list of U.S. Exchange Offices):

Line 1: Appropriate U.S. Exchange Office and Routing Code

Line 2: Contents WKG

Line 3: Mailer, Mailer Location

Example: ISC MIAMI FL 33112, IPA—WKG, ABC COMPANY MIAMI FL.

* * * * *

293 International Surface Air Lift (ISAL) Service

293.1 Description

293.11 General

[Revise 293.11 to read as follows:]

International Surface Air Lift (ISAL) service, including ISAL M-bags, is a commercial service designed for volume mailings of all First-Class Mail International postcards, letters, and large envelopes (flats), and for volume mailings of First-Class Package International Service packages (small packets).

The sender must prepare mailpieces in accordance with the requirements of this subchapter and with the shape-based requirements of the applicable service—either First-Class Mail International items (see 240) and/or First-Class Package International Service items (see 250). ISAL shipments are typically flown to the foreign destinations (exceptions apply to Canada and Mexico) and are then entered into that country's surface nonpriority mail system for delivery. Separate prices are provided for International Service Center (ISC) drop shipments, presorted mail, and nonpresorted mail. Volume incentives are available through customized agreements.

* * * * *

293.2 Eligibility

293.21 Qualifying Mailpieces

[Revise 293.21 to read as follows:]

To qualify for ISAL service, a mailpiece must meet the First-Class Mail International characteristics as defined in 141.5 (except for weight—see 293.24) or the First-Class Package International Service characteristics as defined in 141.6 (except for weight—see 293.24). Mailpieces do not have to be of the same size and weight to qualify. Any item sent with ISAL service must conform to the size limits for First-Class Mail International postcards, letters, or large envelopes (flats) as described in 240, or for First-Class Package

International Service packages (small packets) as described in 250.

* * * * *

293.23 Minimum Quantity Requirements

* * * * *

293.232 Presort Eligibility—Full-Service

[Revise the first sentence to read as follows:]

Only a direct country container with a minimum of 2 pounds qualifies for the presort price. * * *

293.233 Presort Eligibility—ISC Drop Shipment

[Revise the first sentence to read as follows:]

Only a direct country container with a minimum of 2 pounds or a mixed country container with a minimum of 5 pounds qualifies for the presort price. * * *

[Insert new 293.24 to read as follows (renumbering current 293.24 through 293.26 to be 293.25 through 293.27):]

293.24 Maximum Weight Limits

The maximum weight for an ISAL container is 66 pounds. The maximum weight for an individual ISAL item is as follows:

a. Letter-size item: 3.5 ounces.
b. Flat-size item: 17.6 ounces.
c. Package-size item: 4.4 pounds.

* * * * *

293.3 Prices and Postage Payment Methods

293.31 Prices

[Revise the first sentence to read as follows:]

ISAL service has two price options: A presort price with 19 price groups, and a worldwide nonpresort price. * * *

* * * * *

293.4 Mail Preparation

* * * * *

[Revise 293.45 through 293.47 in their entirety to read as follows:]

293.45 ISAL Price Groups and Foreign Office of Exchange Codes

See Exhibits 293.45a and 293.45b for the ISAL Country Price Groups and Foreign Office of Exchange Codes.

Exhibit 293.45a

ISAL Country Price Groups, and Foreign Office of Exchange Codes for All Countries Other Than Canada

Country labeling name	Foreign office of exchange code	Price group
Albania	TIA	16
Algeria	ALG	19
Angola	LAD	19
Argentina	BUE	10
Aruba	AUA	17
Australia	SYD	9
Austria	VIE	12
Bahrain	BAH	19
Bangladesh	DAC	19
Belgium	BRU	12
Belize	BZE	17
Benin	COO	19
Bolivia	LPB	17
Brazil	SAO	10
Bulgaria	SOF	16
Burkina Faso	OUA	19
Cameroon	DLA	19
Canada	See Canadian Labeling Information in Exhibit 293.45b.	1
Central African Republic	BGF	19
Chile	SCL	17
China	BJS	14
Colombia	BOG	17
Congo, Democratic Republic of the	FIH	19
Costa Rica	SJO	17
Cote d'Ivoire (Ivory Coast)	ABJ	19
Curacao (includes Bonaire, Saba, and Sint Eustatius)	CUR	17
Czech Republic	PRG	16
Denmark	CPH	12
Dominican Republic	SDQ	17
Ecuador	GYE	17
Egypt	CAI	19
El Salvador	SAL	17
Ethiopia	ADD	19
Fiji	NAN	18
Finland	HEL	12
France (includes Corsica)	CDG	5
French Guiana	CAY	17
Gabon	LBV	19
Germany	NIA	4
Ghana	ACC	19
Great Britain	LAL	3
Greece	ATH	13
Guatemala	GUA	17
Guyana	GEO	17
Haiti	PAP	17

ISAL COUNTRY PRICE GROUPS, AND FOREIGN OFFICE OF EXCHANGE CODES FOR ALL COUNTRIES OTHER THAN CANADA—Continued

Country labeling name	Foreign office of exchange code	Price group
Honduras	TGU	17
Hong Kong	HKG	11
Hungary	BUD	16
Iceland	REK	15
India	BOM	14
Indonesia	JKT	18
Ireland	AHE	13
Israel	TLV	13
Italy	MIL	7
Jamaica	KIN	17
Japan*	KIX	6
	KWS	6
Jordan	AMM	19
Kenya	NBO	19
Korea, Rep. of (South)	SEL	11
Kuwait	KWI	19
Lebanon	BEY	19
Liechtenstein	ZRH	15
Luxembourg	LUX	15
Madagascar	TNR	19
Malaysia	KUL	18
Mali	BKO	19
Mauritania	NKC	19
Mauritius	MRU	19
Mexico	MEX	2
Morocco	CAS	19
Mozambique	MPM	19
Netherlands	AMS	12
New Zealand	AKL	9
Nicaragua	MGA	17
Niger	NIM	19
Nigeria	LOS	19
Norway	OSL	12
Oman	MCT	19
Pakistan	KHI	19
Panama	PTY	17
Papua New Guinea	BOR	18
Paraguay	ASU	17
Peru	LIM	17
Philippines	MNL	14
Poland	WAW	12
Portugal	LIS	13
Qatar	DOH	19
Reunion	RUN	19
Romania	BUH	16
Russia	MOW	16
Saudi Arabia	DMM	19
Senegal	DKR	19
Singapore	SIN	11
Sint Maarten	SXM	17
Slovak Republic (Slovakia)	BTS	16
South Africa	JNB	14
Spain (includes Canary Islands)	MAD	8
Sri Lanka	CMB	19
Suriname	PBM	17
Sweden	STO	12
Switzerland	ZRH	12
Taiwan	TPE	14
Tanzania	DAR	19
Thailand	BKK	14
Timor-Leste, Democratic Republic of	DIL	18
Togo	LFW	19
Trinidad and Tobago	POS	17
Tunisia	TUN	19
Turkey	IST	16
Uganda	KLA	19
United Arab Emirates	DXB	19
Uruguay	MVD	17
Venezuela	CCS	17
Yemen	SAH	19

ISAL COUNTRY PRICE GROUPS, AND FOREIGN OFFICE OF EXCHANGE CODES FOR ALL COUNTRIES OTHER THAN CANADA—Continued

Country labeling name	Foreign office of exchange code	Price group
Zambia	NLA	19
Zimbabwe	HRE	19

*To expedite handling, Japan Post has requested that U.S. shippers make the following optional separation of their ISAL mail:
—Mail destined for locations in Japan with post code prefixes 52–93 should be labeled to Osaka International (KIX).
—Mail destined for all other post code prefixes should be labeled to Kawasaki (KWS).
—ISAL mail that is not optionally separated as specified above should be labeled to Kawasaki KWS).

Exhibit 293.45b

CANADIAN MAIL CONTAINER LABELING INFORMATION

[Full-service only]

ZIP Code of entry post office*	Canadian destination	U.S. exchange office code	U.S. exchange office (or ISC)	Foreign office of exchange code
005, 010–089, 100–212, 214–268, 270–297, 400–418, 420–427, 470–471, 476–477.	MONTREAL QC FWD	003	JFK	YMQ.
006–009, 298–339, 341–342, 344, 346–347, 349–352, 354–399, 723.	MONTREAL QC FWD	33112	MIA	YMQ.
430–469, 472–475, 478–516, 520–528, 530–532, 534–535, 537–551, 553–567, 570–577, 580–588, 600–620, 622–631, 633–641, 644–658, 660–662, 664–681, 683–693, 700–701, 703–708, 710–714, 716–722, 724–731, 733–741, 743–816, 822–831, 840–847, 870–875, 877–885, 893, 897–898.	TORONTO ON FWD	60290	ORD	For ISAL letter-size and flat-size: TOR. For ISAL packages-size: YTO.
590–599, 820–821, 832–838, 894–895, 937–961, 970–986, 988–999.	VANCOUVER BC FWD	94013	SFO	YVR.
850–853, 855–857, 859–860, 863–865, 889–891, 900–908, 910–928, 930–936.	VANCOUVER BC FWD	90899	LAX	YVR.
967–969	VANCOUVER BC FWD	96820	HNL	YVR.

*The "ZIP Code of Entry Post Office" column is relevant only for mailings claimed at the full-service price (i.e., not drop shipped at an ISC) to determine their Canadian destination and U.S. exchange office code container information.

293.46 Presort Mailings: Direct Country—Price Groups 1 Through 14

293.461 General

Price groups 1 through 14 may be prepared in direct country containers (full-service price and ISC drop shipment price). Each direct country container must contain at least 2 pounds of mail. The mailer must separately containerize items bearing customs forms from items not bearing customs forms and must prepare letter-size, flat-size, and package-size items in separate containers as defined in 293.462a through 293.462c. Smaller quantities qualify only for mixed country price (price groups 9 through 14 only) under 293.47, or for the worldwide nonpresort price under 293.49. The maximum container weight is 66 pounds.

293.462 Preparation

The mailer must prepare direct country containers of presorted ISAL mail (full-service price and ISC drop shipment price) as follows:

a. *Letter-Size and Flat-Size Mail.* For each direct country tray of letter-size or flat-size mail, the mailer must do the following:

1. *Mail Preparation.* Prepare letter-size items in letter trays, either 1-foot or 2-foot, depending on volume. Prepare flat-size items in flat trays/tubs. Do not prepare the content of trays in bundles. Face all letter-size items and flat-size items in the same direction. Ensure that all trays are full enough to keep the mail from mixing during transportation. Cover (i.e., sleeve or lid) all letter-size and flat-size trays and secure them with strapping.

2. *Container Tags.* Complete the front side of PS Tag 155, *International Surface Air Lift,* which identifies the mail to ensure it receives priority handling. Check the appropriate box to indicate if the tray contains items *with* or *without* customs forms, identify the destination country, and enter the date of mailing, the 10-digit permit number, the foreign office of exchange code as listed in Exhibits 293.45a and 293.45b, and the price group as listed in Exhibits 293.45a and 293.45b. To the front side of the tag, apply a barcode that indicates the mailer's permit number, the product code, the service type code, the container type code, the mail contents shape type code, the foreign office of exchange code, and the serial number of the container. (To request technical specifications for the barcode, send an email to *globalbusiness-sales@usps.gov*). Finally, tape the PS Tag 155 to the tray cover.

b. *Packages.* For each direct country sack of package-size items, the mailer must do the following:

1. *Mail Preparation.* Prepare package-size items by placing them loose in sacks.

2. *Container Tags.* Complete the front side of PS Tag 155, *International Surface Air Lift,* which identifies the mail to ensure it receives priority handling. Check the appropriate box to indicate if the container contains items *with* or *without* customs forms, identify the destination country, and enter the date of mailing, the 10-digit permit number, the foreign office of exchange code as listed in Exhibits 293.45a and 293.45b, and the price group as listed in Exhibits 293.45a and 293.45b. To the front side of the tag, apply a barcode that indicates the mailer's permit number, the product code, the service

type code, the container type code, the shape type code, the foreign office of exchange code, and the serial number of the container. (To request technical specifications for the barcode, send an email to *globalbusiness-sales@usps.gov*). Finally, attach PS Tag 155 to the neck of the sack.

c. *Direct Country Container Label.* A mailer who claims the ISC drop shipment price and enters the mail at an authorized drop shipment location under 293.532 is not required to prepare container labels. A mailer who claims the full-service price must complete 2-inch container labels (and insert them into the applicable container label holder) as follows (see Exhibit 293.462 for the list of U.S. Exchange Offices):

Line 1: Appropriate U.S. Exchange Office and Routing Code

Line 2: Contents—DRX COUNTRY

Line 3: Mailer, Mailer Location

Example: ISC NEW YORK NY 003, ISAL—DRX COUNTRY, ABC STORE ALBANY NY.

Exhibit 293.462

LABELING OF ISAL MAIL TO POSTAL SERVICE EXCHANGE OFFICES

[Full-service only]

ISAL acceptance office 3-digit zip code prefix	U.S. exchange office and routing code for line 1
005, 010–089, 100–212, 214–268, 270–297, 400–418, 420–427, 470–477	ISC NEW YORK NY 003.
006–009, 298–339, 341–342, 344, 346–347, 349–352, 354–399	ISC MIAMI FL 33112.
424, 430–469, 478–516, 520–528, 530–532, 534–535, 537–551, 553–567, 570–577, 580–588, 600–620, 622–631, 633–641, 644–658, 660–662, 664–681, 683–693, 700–701, 703–708, 710–714, 716–731, 733–741, 743–799, 885.	ISC CHICAGO IL 60290.
590–599, 800–816, 820–838, 840–847, 893–895, 897–898, 937–961, 970–986, 988–999	ISC SAN FRANCISCO CA 94013.
850–853, 855–857, 859–860, 863–865, 870–875, 877–884, 889–891, 900–908, 910–928, 930–936	ISC LOS ANGELES CA 900
967–969	P&DC HONOLULU HI 967.

293.47 Presort Mailings: Mixed Country—Price Groups 9 Through 14

293.471 General

Price groups 9 through 14 may be prepared in mixed country containers (ISC drop shipment price) only after all possible direct country containers have been prepared. Each mixed country price group must contain at least 5 pounds of mail that are destined within the same price group. The mailer must separately containerize items bearing customs forms from items not bearing customs forms and must prepare letter-size, flat-size, and package-size items in separate containers as defined in 293.472a and 293.472b. Smaller quantities qualify only for the worldwide nonpresort price under 293.49. The maximum container weight is 66 pounds.

293.472 Preparation

The mailer must prepare mixed country containers of presorted ISAL mail (ISC drop shipment price) as follows:

a. *Letter-Size and Flat-Size Mail.* For each mixed country tray of letter-size or flat-size mail, the mailer must do the following:

1. *Mail Preparation.* Prepare letter-size items in letter trays, either 1-foot or 2-foot, depending on volume. Prepare flat-size items in flat trays/tubs. Bundle letter-size and flat-size pieces as defined in 293.44 and each country must be bundled separately. Face all letter-size items and flat-size items in the same direction and apply a label (facing slip) to the top item as defined in 293.473. Cover (i.e., sleeve or lid) all letter-size trays and flat-size trays/tubs and secure them with strapping.

2. *Container Tags.* Complete the front side of PS Tag 155, *International Surface Air Lift,* which identifies the mail to ensure it receives priority handling. Identify the date of mailing, the 10-digit permit number, and the price group as listed in Exhibit 293.45a or 293.45b followed by the word ''Mixed'' (e.g., ''14—Mixed''). Finally, tape PS Tag 155 to the tray cover.

b. *Packages.* For each mixed country container of package-size items, the mailer must do the following:

1. *Mail Preparation.* Prepare package-size items by placing them loose in sacks.

2. *Container Tags.* Complete the front side of PS Tag 155, *International Surface Air Lift,* which identifies the mail to ensure it receives priority handling. Identify the date of mailing, the 10-digit permit number, and the price group as listed in Exhibit 293.45a or 293.45b followed by the word ''Mixed'' (e.g., ''14–Mixed''). Finally, attach PS Tag 155 to the neck of the sack.

293.473 Direct Country Bundle Label for Mixed Country Containers

Only letter-size and flat-size direct country bundles prepared for mixed country containers require a label (facing slip). The mailer must complete the label and place it on the address side of the top item of each bundle in such a manner that it will not become separated from the bundle. The pressure-sensitive labels and optional endorsement lines used domestically for presort mail are prohibited for ISAL service. Bundle labels must contain the following information:

Line 1: Foreign Office of Exchange Code. (See Exhibits 293.45a and 293.45b.)

Line 2: Country Labeling Name. (See Exhibits 293.45a and 293.45b.)

Line 3: Mailer, Mailer Location (City and State).

Example: VIE, AUSTRIA, ABC COMPANY WASHINGTON DC.

[Insert new 293.48 and 293.49 to read as follows:]

293.48 Presort Mailings—Price Groups 15 Through 19

293.481 General

Price groups 15 through 19 may be prepared in direct country containers (full-service price and ISC drop shipment price) or mixed country containers (ISC drop shipment price). Each direct country container must contain at least 2 pounds of mail. Each mixed country container must contain at least 5 pounds of mail. Smaller quantities qualify only for the worldwide nonpresort price under 293.49. The mailer must separately containerize items bearing customs forms from items not bearing customs forms. The maximum container weight is 66 pounds.

293.482 Preparation

The mailer has two options to prepare direct country or mixed country containers of presorted ISAL mail, as follows:

1. Prepare mail as described in 293.46 and 293.47, including using letter-size trays for letter-size items, flat-size trays/

tubs for flat-size items, and sacks for package-size items.

2. Prepare mail in sacks for all processing categories as defined in 293.482 and 293.483.

293.483 Direct Country—Optional Sack Preparation

The mailer may optionally prepare direct country sacks or mixed country sacks of presorted ISAL mail when sacks are used for all processing categories as follows:

a. *Full-Service and ISC Drop Shipment—Direct country sacks.*

1. *Preparation.* Mail (letter-size, flat-size and package-size) that is addressed to an individual country and that contains 2 pounds or more must be sorted into direct country sacks. Mail that cannot be made up into direct country sacks must be prepared and entered as mixed country sacks (ISC Drop Shipment only) or the worldwide nonpresort price. The mailer must bundle letter-size and flat-size items as defined in 293.44. The mailer must bundle letter-size items and flat-size items separately, although nonidentical items may be commingled within each of these categories. Face all letter-size items and flat-size items in the same direction and apply a label (facing slip) to the top item as defined in 293.473. Place package-size items loose in the sack provided that items bearing customs forms are separated from items not bearing customs forms.

2. *Container Tags.* The mailer must complete the front side of PS Tag 155, *International Surface Air Lift,* which identifies the mail to ensure it receives priority handling. The mailer must check the appropriate box to indicate if the sack contains items *with* or *without* customs forms, identify the destination country, and enter the date of mailing, the 10-digit permit number, the foreign office of exchange code as listed in Exhibits 293.45a and 293.45b, and the price group as listed in Exhibits 293.45a and 294.45b. To the front side of the tag, the mailer must apply a barcode that indicates the mailer's permit number, the product code, the service type code, the container type, the shape type, the foreign office of exchange code, and the serial number of the sack. (To request technical specifications for the barcode, send an email to *globalbusiness-sales@usps.gov*). Finally, the mailer must attach PS Tag 155 to the neck of the sack.

3. *Direct Country Container Label.* A mailer who claims the ISC drop shipment price and enters the mail at an authorized drop shipment location under 293.532 is not required to prepare container labels. A mailer who claims the full-service price must complete 2-inch container labels (and insert them into the applicable container label holder) as follows (see Exhibit 293.483 for the list of U.S. Exchange Offices):

Line 1: Appropriate U.S. Exchange Office and Routing Code

Line 2: Contents—DRX COUNTRY

Line 3: Mailer, Mailer Location

Example: ISC NEW YORK NY 003, ISAL—DRX COUNTRY, ABC STORE ALBANY NY.

Exhibit 293.483

LABELING OF ISAL MAIL TO POSTAL SERVICE EXCHANGE OFFICES [FULL-SERVICE ONLY]

ISAL acceptance office 3-digit ZIP Code prefix	U. S. exchange office and routing code for line 1
005, 010–089, 100–212, 214–268, 270–297, 400–418, 420–427, 470–477	ISC NEW YORK NY 003.
006–009, 298–339, 341–342, 344, 346–347, 349–352, 354–399	ISC MIAMI FL 33112.
424, 430–469, 478–516, 520–528, 530–532, 534–535, 537–551, 553–567, 570–577, 580–588, 600–620, 622–631, 633–641, 644–658, 660–662, 664–681, 683–693, 700–701, 703–708, 710–714, 716–731, 733–741, 743–799, 885.	ISC CHICAGO IL 60290.
590–599, 800–816, 820–838, 840–847, 893–895, 897–898, 937–961, 970–986, 988–999	ISC SAN FRANCISCO CA 94013.
850–853, 855–857, 859–860, 863–865, 870–875, 877–884, 889–891, 900–908, 910–928, 930–936 967–969.	ISC LOS ANGELES CA 900. P&DC HONOLULU HI 967.

b. *ISC Drop Shipment—Mixed country sacks.*

1. Mixed country sacks can be prepared only after all possible direct country sacks have been prepared. Mailers must prepare mixed country sacks for items that contain 5 pounds or more and that are destined within the same price group. Mail that ultimately cannot be made up into direct country sacks or mixed country sacks must be prepared and entered at the worldwide nonpresort price. The mailer must bundle letter-size and flat-size items as defined in 293.44. The mailer must bundle letter-size and flat-size items separately, although nonidentical items may be commingled within each of these categories. Face all letter-size items and flat-size items in the same direction and apply a label (facing slip) to the top item as defined in 293.483. Place package-size items that cannot be bundled because of their physical characteristics loose in the sack provided that items bearing customs forms are separated from items not bearing customs forms.

2. *Container Tags.* The mailer must complete the front side of PS Tag 155, *International Surface Air Lift,* which identifies the mail to ensure it receives priority handling. On the front of the tag, the mailer must identify the date of mailing, the 10-digit permit number, and the price group as listed in Exhibits 293.45a and 293.45b followed by the word ''Mixed'' (e.g., ''15–Mixed''). Finally, the mailer must attach PS Tag 155 to the neck of the sack.

293.483 Direct Country Bundle Label

Only letter-size and flat-size direct country bundles prepared for mixed country sacks require a label (facing slip). The mailer must complete the label and place it on the address side of the top item of each bundle in such a manner that it will not become separated from the bundle. The pressure-sensitive labels and optional endorsement lines used domestically for presort mail are prohibited for ISAL service. Bundle labels must contain the following information:

Line 1: Foreign Office of Exchange Code. (See Exhibits 293.45a and 293.45b.)

Line 2: Country Labeling Name. (See Exhibits 293.45a and 293.45b.)

Line 3: Mailer, Mailer Location (City and State).

Example: VIE, AUSTRIA, ABC COMPANY WASHINGTON DC.

293.49 Worldwide Nonpresort Preparation

The following standards apply when the mailer prepares worldwide nonpresort ISAL mail (full-service price and ISC drop shipment price):

a. *General.* A mailer claiming any mail at the direct country or mixed country price cannot enclose the mail in worldwide nonpresort sacks. The mailer must bundle letter-size and flat-size mail. All types of mail, including letter-size bundles, flat-size bundles, and

loose items, can be commingled in the same sack. Labels (facing slips) are not required on any bundles. Containers other than sacks are not authorized unless other equipment is specified by the acceptance office—for example, nonpresorted letter-size mail may be presented in trays if authorized by the acceptance office. The maximum weight of any container is 66 pounds.

b. *Worldwide Nonpresort Container Label.* A mailer who claims the ISC drop shipment price and enters the mail at an authorized drop shipment location under 293.532 is not required to prepare container labels. A mailer who claims the full-service price must complete 2-inch container labels (and insert them into the applicable container label holder) as follows (see Exhibit 293.483 for the list of U.S. Exchange Offices):

Line 1: Appropriate U.S. Exchange Office and Routing Code

Line 2: Contents WKG

Line 3: Mailer, Mailer Location

Example: ISC MIAMI FL 33112, ISAL—WKG, ABC COMPANY MIAMI FL.

* * * * *

297 Customized Agreements

297.1 Description

[Revise 297.1 to read as follows:]

The Postal Service provides Global Expedited Package Services (GEPS) customized agreements to Priority Mail Express International, Priority Mail International, and First-Class Package International Service customers pursuant to the terms and conditions stipulated between the Postal Service and a particular customer.

* * * * *

3 Extra Services

* * * * *

370 International Money Transfer Services

* * * * *

372 Sure Money (DineroSeguro)

* * * * *

372.2 Options and Restrictions

The following restrictions apply to Sure Money service:

[Revise item a to read as follows:]

a. The maximum purchase per day is $1,500.

* * * * *

372.3 Fees

[Revise 372.3 to read as follows:]

See Exhibit 372.3 for the fees for Sure Money service.

Exhibit 372.3

FEES FOR SURE MONEY SERVICE

Transaction type	Amount not over	Fee
Sales	$750	$11.00
	$1,500	$16.50
Refunds	$1,500	$26.00
Change of Payee	$1,500	$12.00

* * * * *

Individual Country Listings

* * * * *

Mexico

* * * * *

Priority Mail Express International (*220*) Price Group 2

[Revise the table to read as follows (increasing the maximum weight limit to 70 pounds):]

Refer to *Notice 123, Price List,* for the applicable retail, Commercial Base, or Commercial Plus price.

Weight Limit: 70 lbs.

* * * * *

Priority Mail International (*230*) Price Group 2

[Revise the table to read as follows (increasing the maximum weight limit to 70 pounds):]

Refer to Notice 123, *Price List,* for the applicable retail, Commercial Base, or Commercial Plus price.

Weight Limit: 70 lbs.

* * * * *

We will publish an appropriate amendment to 39 CFR part 20 to reflect these changes.

Stanley F. Mires,

Attorney, Legal Policy & Legislative Advice.

[FR Doc. 2013–27710 Filed 11–20–13; 8:45 am]

BILLING CODE 7710–12–P

ENVIRONMENTAL PROTECTION AGENCY

40 CFR Parts 52

[EPA–R06–OAR–2006–0593; FRL–9903–00–Region 6]

Approval and Promulgation of Implementation Plans; Texas; Control of Air Pollution by Permits for New Construction or Modification; Permits for Specific Designated Facilities

AGENCY: Environmental Protection Agency (EPA).

ACTION: Direct final rule.

SUMMARY: EPA is taking a direct final action to approve portions of two revisions to the Texas State Implementation Plan (SIP) concerning the Permits for Specific Designated Facilities Program, also referred to as the FutureGen Program. EPA has determined that the portions of these SIP revisions specific to the FutureGen Program submitted on March 9, 2006 and July 2, 2010, comply with the Clean Air Act and EPA regulations and are consistent with EPA policies. This action is being taken under section 110 and parts C and D of the Act.

DATES: This direct final rule is effective on January 21, 2014 without further notice, unless EPA receives relevant adverse comment by December 23, 2013. If EPA receives such comment, EPA will publish a timely withdrawal in

the **Federal Register** informing the public that this rule will not take effect.

ADDRESSES: Submit your comments, identified by Docket ID No. EPA–R06–OAR–2006–0593, by one of the following methods:

(1) *www.regulations.gov:* Follow the on-line instructions for submitting comments.

(2) *Email:* Ms. Adina Wiley at *wiley.adina@epa.gov.*

(3) *Mail or Delivery:* Ms. Adina Wiley, Air Permits Section (6PD–R), Environmental Protection Agency, 1445 Ross Avenue, Suite 1200, Dallas, Texas 75202–2733.

Instructions: Direct your comments to Docket ID No. EPA–R06–OAR–2006–0593. EPA's policy is that all comments received will be included in the public docket without change and may be made available online at *http://www.regulations.gov,* including any personal information provided, unless the comment includes information claimed to be Confidential Business Information (CBI) or other information the disclosure of which is restricted by statute. Do not submit information through *http://www.regulations.gov* or email, if you believe that it is CBI or otherwise protected from disclosure. The *http://www.regulations.gov* Web site is an ''anonymous access'' system, which means that EPA will not know your identity or contact information unless you provide it in the body of your comment. If you send an email comment directly to EPA without going through *http://www.regulations.gov,* your email address will be automatically captured and included as part of the comment that is placed in the public docket and made available on the Internet. If you submit an electronic comment, EPA recommends that you include your name and other contact information in the body of your comment along with any disk or CD–ROM submitted. If EPA cannot read your comment due to technical difficulties and cannot contact you for clarification, EPA may not be able to consider your comment. Electronic files should avoid the use of special characters and any form of encryption and should be free of any defects or viruses. For additional information about EPA's public docket, visit the EPA Docket Center homepage at *http://www.epa.gov/epahome/dockets.htm.*

Docket: The index to the docket for this action is available electronically at *www.regulations.gov* and in hard copy at EPA Region 6, 1445 Ross Avenue, Suite 700, Dallas, Texas. While all documents in the docket are listed in the index, some information may be publicly available only at the hard copy location (e.g., copyrighted material), and some may not be publicly available at either location (e.g., CBI). To inspect the hard copy materials, please schedule an appointment with the person listed in the **FOR FURTHER INFORMATION CONTACT** paragraph below or Mr. Bill Deese at 214–665–7253.

FOR FURTHER INFORMATION CONTACT: If you have questions concerning today's direct final action, please contact Ms. Adina Wiley (6PD–R), Air Permits Section, Environmental Protection Agency, Region 6, 1445 Ross Avenue (6PD–R), Suite 1200, Dallas, Texas 75202–2733, telephone (214) 665–2115; fax number (214) 665–6762; email address *wiley.adina@epa.gov.*

SUPPLEMENTARY INFORMATION: Throughout this document wherever ''we,'' ''us,'' or ''our'' is used, we mean the EPA.

Table of Contents

I. What action is EPA taking?
II. What did Texas submit?
III. EPA's Evaluation
IV. Final Action
V. Statutory and Executive Order Reviews

I. What action is EPA taking?

EPA is taking a direct final action to approve portions of two revisions to the Texas State Implementation Plan (SIP) concerning the Permits for Specific Designated Facilities Program, also referred to as the FutureGen Program. EPA has determined that the portions of these SIP revisions specific to the FutureGen Program submitted on March 9, 2006 and July 2, 2010, comply with the Clean Air Act and EPA regulations and are consistent with EPA policies. This action is being taken under section 110 and parts C and D of the Act.

We are publishing this rule without prior proposal because we view this as a noncontroversial amendment and anticipate no relevant adverse comments. As explained in this action and our accompanying technical support documents (TSD), we are finding this action noncontroversial because the FutureGen permitting and public notice provisions can no longer be used in Texas, but we are proceeding with a final action to fulfill our statutory obligations under the CAA. However, in the proposed rules section of this **Federal Register** publication, we are publishing a separate document that will serve as the proposal to approve the SIP revision if relevant adverse comments are received. This rule will be effective on January 21, 2014 without further notice unless we receive relevant adverse comment by December 23, 2013. If we receive relevant adverse comments, we will publish a timely withdrawal in the **Federal Register** informing the public that the rule will not take effect. We will address all public comments in a subsequent final rule based on the proposed rule. We will not institute a second comment period on this action. Any parties interested in commenting must do so now. Please note that if we receive adverse comment on an amendment, paragraph, or section of this rule and if that provision may be severed from the remainder of the rule, we may adopt as final those provisions of the rule that are not the subject of an adverse comment.

II. What did Texas submit?

FutureGen is a United States Department of Energy (DOE) program designed to promote the advancement and development of new technologies. FutureGen refers to a combination of technologies for carbon sequestration, carbon dioxide enhanced oil recovery, electric generation, and hydrogen production. FutureGen is a technology demonstration project that is a partnership between industry participants and the DOE.

The 79th Texas Legislature passed House Bill 2201 (HB 2201) in 2005, and concluded that the FutureGen technology demonstration project could result in major economic, social and environmental benefits for Texas. In order to help Texas compete for federal funding associated with the FutureGen Project, the Texas Legislature passed HB 2201 to provide for streamlined permitting by specifically exempting FutureGen projects from the contested case hearing process.

March 9, 2006 SIP Submittal

Pursuant to the directive of Texas HB 2201, on February 22, 2006, the TCEQ adopted the new provisions to Chapter 116 to establish streamlined permitting procedures and rules for the FutureGen Project. At the same time, the TCEQ also adopted public participation provisions for the FutureGen Project to provide for the exemption from contested case hearing. These new provisions were submitted to EPA as a SIP revision on March 9, 2006 by the Chairman of the TCEQ, Ms. Kathleen Hartnett White, as Rule Project No. 2005–053–091–PR.

July 2, 2010 SIP Submittal

The TCEQ subsequently adopted revisions to the public notice provisions for the entirety of the Texas Air Permit program on June 2, 2010. The Chairman of the TCEQ, Mr. Bryan W. Shaw, Ph.D., submitted these revised public participation rules as a revision to the Texas SIP on July 2, 2010 as part of Rule

Project No. 2010–004–039–LS. On this date, the TCEQ also withdrew the previous public notice SIP submittals, including the FutureGen specific public notice provisions submitted on March 9, 2006. Therefore, the public notice provisions specific to the FutureGen Program that remain before EPA for action were submitted on July 2, 2010.

The July 2, 2010 SIP submittal established the public participation provisions for the majority of the Texas air permitting programs, including applications for the FutureGen Program. On December 13, 2012, EPA proposed approval of most of the public participation rules submitted on July 2, 2010. See 77 FR 74129. However, in that proposed approval we severed and took no action on the portions of the public notice provisions establishing applicability and response to comment provisions specific to FutureGen Program applications at 30 TAC 39.402(a)(10), 39.419(e)(3) and 39.420(h). We deferred action on these provisions until such time as we evaluated the underlying permit provisions for the FutureGen Program at 30 TAC Chapter 116, Subchapter L. See 77 FR 74129. EPA is addressing the July 2, 2010, submittal of 30 TAC 39.402(a)(10), 39.419(e)(3) and 39.420(h) through today's direct final action.

III. EPA's Evaluation

We provide our evaluation for this rulemaking in this section. Additional information to support our evaluation is available in the TSDs for this rulemaking, which are available in the rulemaking docket.

Our evaluation shows that a FutureGen Project could be a PSD, NNSR or minor NSR source; therefore, we reviewed the program against the federal permitting and public notice requirements and the existing SIP-approved provisions in Texas. The FutureGen permitting provisions require an applicant to demonstrate compliance with all requirements for PSD and NNSR permitting; which would require the FutureGen applicant to also comply with the public notice rules applicable to PSD and NNSR permitting.[1] Additionally, the FutureGen permitting provisions require an applicant to demonstrate protection of public health and welfare by complying with the Texas Health and Safety Code and all applicable rules and regulations of the TCEQ. Accordingly, we find that the FutureGen Program permitting and public notice rules as submitted March 9, 2006 and July 2, 2010 are consistent with the requirements of the CAA and EPA's regulations, and protect the integrity of the Texas SIP.

Since the adoption of Texas HB 2201 and the adoption and submittal of the associated Texas SIP provisions, the FutureGen Project has been awarded to the State of Illinois. Additionally, the DOE decided to stop funding the FutureGen Project in 2008. On August 5, 2010, the DOE introduced FutureGen 2.0; a reinvention of the original FutureGen Project concept still planned for Illinois. Therefore, the submitted rules establishing the permitting and public notice rules for the FutureGen Project likely will not be used in Texas because the underlying FutureGen Project is not in existence in Texas.

EPA, however, has a statutory obligation to review and act upon SIP submittals pursuant to CAA 110(k). Because the State of Texas submitted the regulatory provisions for the FutureGen Project for approval into the Texas SIP, and has not subsequently requested to withdraw the program from our consideration, we are required to take action even though the program is superfluous to the SIP. Our authority under CAA 110(k)(4) does not provide us the ability to disapprove a program solely because it is no longer needed. Neither can we take steps to return the superfluous provisions to the state absent a direct request. Therefore, EPA must proceed with this proposed action to satisfy our obligations under the CAA.

IV. Final Action

Under section 110 and parts C and D of the Act, and for the reasons stated above, EPA is taking direct final action to approve revisions to the Texas SIP submitted on March 9, 2006 and July 2, 2010 for the Permits for Specific Designated Facilities Program, or the FutureGen Project, as consistent with the CAA and EPA's policy and guidance. Specifically, EPA is approving the following new provisions establishing the FutureGen permitting requirements as submitted on March 9, 2006: 30 TAC 116.1400, 116.1402, 116.1404, 116.1406, 116.1408, 116.1410, 116.1414, 116.1416, 116.1418, 116.1420, 116.1422, 116.1424, 116.1426 and 116.1428. EPA is approving the new provisions establishing the FutureGen-specific public notice provisions at 30 TAC 39.402(a)(10), 39.419(e)(3) and 39.420(h) as submitted on July 2, 2010.

V. Statutory and Executive Order Reviews

Under the Clean Air Act, the Administrator is required to approve a SIP submission that complies with the provisions of the Act and applicable federal regulations. 42 U.S.C. 7410(k); 40 CFR 52.02(a). Thus, in reviewing SIP submissions, EPA's role is to approve state choices, provided that they meet the criteria of the Clean Air Act. Accordingly, this action merely approves state law as meeting Federal requirements and does not impose additional requirements beyond those imposed by state law. For that reason, this action:

- Is not a ''significant regulatory action'' subject to review by the Office of Management and Budget under Executive Order 12866 (58 FR 51735, October 4, 1993);
- does not impose an information collection burden under the provisions of the Paperwork Reduction Act (44 U.S.C. 3501 et seq.);
- is certified as not having a significant economic impact on a substantial number of small entities under the Regulatory Flexibility Act (5 U.S.C. 601 et seq.);
- does not contain any unfunded mandate or significantly or uniquely affect small governments, as described in the Unfunded Mandates Reform Act of 1995 (Pub. L. 104–4);
- does not have federalism implications as specified in Executive Order 13132 (64 FR 43255, August 10, 1999);
- is not an economically significant regulatory action based on health or safety risks subject to Executive Order 13045 (62 FR 19885, April 23, 1997);
- is not a significant regulatory action subject to Executive Order 13211 (66 FR 28355, May 22, 2001);
- is not subject to requirements of section 12(d) of the National Technology Transfer and Advancement Act of 1995 (15 U.S.C. 272 note) because application of those requirements would be inconsistent with the Clean Air Act; and
- does not provide EPA with the discretionary authority to address, as appropriate, disproportionate human health or environmental effects, using practicable and legally permissible methods, under Executive Order 12898 (59 FR 7629, February 16, 1994).

In addition, this rule does not have tribal implications as specified by Executive Order 13175 (65 FR 67249, November 9, 2000), because the SIP is not approved to apply in Indian country located in the state, and EPA notes that it will not impose substantial direct costs on tribal governments or preempt tribal law.

The Congressional Review Act, 5 U.S.C. 801 *et seq.,* as added by the Small

[1] EPA proposed approval of revised public notice rules for Texas air permitting on December 13, 2012. See 77 FR 74129.

Business Regulatory Enforcement Fairness Act of 1996, generally provides that before a rule may take effect, the agency promulgating the rule must submit a rule report, which includes a copy of the rule, to each House of the Congress and to the Comptroller General of the United States. EPA will submit a report containing this action and other required information to the U.S. Senate, the U.S. House of Representatives, and the Comptroller General of the United States prior to publication of the rule in the **Federal Register**. A major rule cannot take effect until 60 days after it is published in the **Federal Register**. This action is not a ''major rule'' as defined by 5 U.S.C. 804(2).

Under section 307(b)(1) of the Clean Air Act, petitions for judicial review of this action must be filed in the United States Court of Appeals for the appropriate circuit by January 21, 2014. Filing a petition for reconsideration by the Administrator of this final rule does not affect the finality of this action for the purposed of judicial review nor does it extend the time within which a petition for judicial review may be filed, and shall not postpone the effectiveness of such rule or action. This action may not be challenged later in proceedings to enforce its requirements. (See section 307(b)(2).)

List of Subjects in 40 CFR Part 52

Environmental protection, Air pollution control, Incorporation by reference, Intergovernmental relations, Reporting and recordkeeping requirements.

Dated: November 1, 2013.

Ron Curry,

Regional Administrator, Region 6.

40 CFR part 52 is amended as follows:

PART 52—[AMENDED]

■ 1. The authority citation for part 52 continues to read as follows:

Authority: 42 U.S.C. 7401 *et seq.*

Subpart SS—Texas

■ 2. In section 52.2270(c) the table titled ''EPA Approved Regulations in the Texas SIP'' is amended as follows:

■ a. Immediately following the entry for Section 19.14, by adding a new centered heading ''Chapter 39—Public Notice'' followed by a new centered heading ''Subchapter H—Applicability and General Provisions'' followed by new entries for Sections 39.402, 39.419, and 39.420; and

■ b. Under Chapter 116 (Reg 6)—Control of Air Pollution by Permits for New Construction or Modification, immediately following the entry for Section 116.931, by adding a new centered heading for ''Subchapter L—Permits for Specific Designated Facilities'' followed by new entries for Sections 116.1400, 116.1402, 116.1404, 116.1406, 116.1408, 116.1410, 116.1414, 116.1416, 116.1418, 116.1420, 116.1422, 116.1424, 116.1426 and 116.1428.

The additions read as follows:

§ 52.2270 Identification of plan.

* * * * *

(c) * * *

EPA-APPROVED REGULATIONS IN THE TEXAS SIP

State citation	Title/subject	State approval/ submittal date	EPA approval date	Explanation
*	*	*	*	*
Chapter 39—Public Notice Subchapter H—Applicability and General Provisions				
Section 39.402	Applicability to Air Quality Permits and Permit Amendments.	6/2/2010	11/21/2013 [Insert FR page number where document begins].	SIP only includes 39.402(a)(10).
Section 39.419	Notice of Application and Preliminary Determination.	6/2/2010	11/21/2013 [Insert FR page number where document begins].	SIP only includes 39.419(e)(3).
Section 39.420	Transmittal of the Executive Director's Response to Comments and Decision.	6/2/2010	11/21/2013 [Insert FR page number where document begins].	SIP only includes 39.420(h).
*	*	*	*	*
Chapter 116 (Reg 6)—Control of Air Pollution by Permits for New Construction or Modification				
*	*	*	*	*
Subchapter L—Permits for Specific Designated Facilities				
Section 116.1400	Purpose	2/22/2006	11/21/2013 [Insert FR page number where document begins].	
Section 116.1402	Applicability	2/22/2006	11/21/2013 [Insert FR page number where document begins].	
Section 116.1404	Permit Required	2/22/2006	11/21/2013 [Insert FR page number where document begins].	
Section 116.1406	Compliance History	2/22/2006	11/21/2013 [Insert FR page number where document begins].	
Section 116.1408	Definitions	2/22/2006	11/21/2013 [Insert FR page number where document begins].	
Section 116.1410	Emissions Profile for FutureGen Projects.	2/22/2006	11/21/2013 [Insert FR page number where document begins].	
Section 116.1414	Applications for Facilities that are Components of a Designated Project.	2/22/2006	11/21/2013 [Insert FR page number where document begins].	

EPA-APPROVED REGULATIONS IN THE TEXAS SIP—Continued

State citation	Title/subject	State approval/ submittal date	EPA approval date	Explanation
Section 116.1416	Public Notice	2/22/2006	11/21/2013 [Insert FR page number where document begins].	
Section 116.1418	Public Participation	2/22/2006	11/21/2013 [Insert FR page number where document begins].	
Section 116.1420	Permit Fee	2/22/2006	11/21/2013 [Insert FR page number where document begins].	
Section 116.1422	General and Special Conditions	2/22/2006	11/21/2013 [Insert FR page number where document begins].	
Section 116.1424	Amendments and Alterations of Permits Issued Under This Subchapter.	2/22/2006	11/21/2013 [Insert FR page number where document begins].	
Section 116.1426	Renewal of Permits Issued Under This Subchapter.	2/22/2006	11/21/2013 [Insert FR page number where document begins].	
Section 116.1428	Delegation	2/22/2006	11/21/2013 [Insert FR page number where document begins].	
*	*	*	*	*

[FR Doc. 2013–27991 Filed 11–20–13; 8:45 am]

BILLING CODE 6560–50–P

Proposed Rules

Federal Register

Vol. 78, No. 225

Thursday, November 21, 2013

This section of the FEDERAL REGISTER contains notices to the public of the proposed issuance of rules and regulations. The purpose of these notices is to give interested persons an opportunity to participate in the rule making prior to the adoption of the final rules.

DEPARTMENT OF HOMELAND SECURITY

8 CFR Part 214

[DHS Docket No. ICEB–2011–0005]

RIN 1653–AA63

Adjustments to Limitations on Designated School Official Assignment and Study by F–2 and M–2 Nonimmigrants

AGENCY: U.S. Immigration and Customs Enforcement, DHS.

ACTION: Notice of proposed rulemaking.

SUMMARY: The Department of Homeland Security proposes to amend its regulations under the Student and Exchange Visitor Program to improve management of international student programs and increase opportunities for study by spouses and children of nonimmigrant students. The proposed rule would grant school officials more flexibility in determining the number of designated school officials to nominate for the oversight of campuses. The rule also would provide greater incentive for international students to study in the United States by permitting accompanying spouses and children of academic and vocational nonimmigrant students with F–1 or M–1 nonimmigrant status to enroll in study at an SEVP-certified school so long as any study remains less than a full course of study. F–2 and M–2 spouses and children remain prohibited, however, from engaging in a full course of study unless they apply for, and DHS approves, a change of nonimmigrant status to a nonimmigrant status authorizing such study.

DATES: Comments and related material must either be submitted to our online docket via *http://www.regulations.gov* on or before January 21, 2014 or reach the Mail or Hand Delivery/Courier address listed below in **ADDRESSES** by that date.

ADDRESSES: You may submit comments, identified by DHS Docket No. ICEB–2011–0005, using any one of the following methods:

- *Federal e-Rulemaking Portal: http://www.regulations.gov.* Follow the instructions for submitting comments.
- *Mail:* Student and Exchange Visitor Program, c/o Katherine Westerlund, Policy Chief (Acting), U.S. Immigration and Customs Enforcement, Department of Homeland Security, 500 12th Street SW., Stop 5600, Washington, DC 20536–5600.
- *Hand Delivery/Courier:* Student and Exchange Visitor Program, c/o Katherine Westerlund, Policy Chief (Acting), 2450 Crystal Drive, Century Tower 9th Floor; Arlington, VA 22202, between 9 a.m. and 5 p.m., Monday through Friday, except federal holidays. Contact telephone number (703) 603–3400.

To avoid duplication, please use only one of these three methods. See the ''Public Participation and Request for Comments'' portion of the **SUPPLEMENTARY INFORMATION** section below for instructions on submitting comments.

FOR FURTHER INFORMATION CONTACT: If you have questions on this proposed rule, call or email Katherine Westerlund, Policy Chief (Acting), Student and Exchange Visitor Program, telephone 703–603–3400, email: *SEVP@dhs.gov.*

SUPPLEMENTARY INFORMATION:

I. Public Participation and Request for Comments

We encourage you to participate in this rulemaking by submitting comments and related materials. All comments received will be posted without change to *http://www.regulations.gov* and will include any personal information you have provided.

A. Submitting Comments

If you submit a comment, please include the docket number for this rulemaking (ICEB–2011–0005), indicate the specific section of this document to which each comment applies, and provide a reason for each suggestion or recommendation. You may submit your comments and material online or by mail or hand delivery, but please use only one of these means. We recommend that you include your name and a mailing address, an email address, or a phone number in the body of your document so that we can contact you if we have questions regarding your submission.

To submit your comment online, go to *http://www.regulations.gov,* click on the ''submit a comment'' box, which will then become highlighted in blue. In the ''Document Type'' drop down menu select ''Proposed Rule'' and insert ''ICEB–2011–0005'' in the ''Keyword'' box. Click ''Search'' then click on the balloon shape in the ''Actions'' column. If you submit your comments by mail or hand delivery, submit them in an unbound format, no larger than 8½ by 11 inches, suitable for copying and electronic filing. If you submit comments by mail and would like to know that they reached the mailing address, please enclose a stamped, self-addressed postcard or envelope.

We will consider all comments and material received during the comment period and may change this proposed rule based on your comments.

B. Viewing Comments and Documents

To view comments, as well as documents mentioned in this preamble as being available in the docket, go to *http://www.regulations.gov,* and click on the ''read comments'' box, which will then become highlighted in blue. In the ''Keyword'' box insert ''ICEB–2011–0005'', click ''Search'' and then click ''Open Docket Folder'' in the ''Actions'' column. Individuals without internet access can make alternate arrangements for viewing comments and documents related to this rulemaking by contacting the Student and Exchange Visitor Program using the **FOR FURTHER INFORMATION CONTACT** information above. Please be aware that anyone can search the electronic form of comments received into any of our dockets by the name of the individual submitting the comment (or signing the comment, if submitted on behalf of an association, business, labor union, etc.).

C. Public Meeting

We do not now plan to hold a public meeting. But you may submit a request for one to the docket using one of the methods specified under **ADDRESSES**. In your request, explain why you believe a public meeting would be beneficial. If we determine that one would aid this rulemaking, we will hold one at a time and place announced by a later notice in the **Federal Register**.

II. Abbreviations

CFR Code of Federal Regulations
DHS Department of Homeland Security
DOS Department of State
DSO Designated school official
FR Federal Register
HSPD–2 Homeland Security Presidential Directive No. 2
ICE U.S. Immigration and Customs Enforcement
INA Immigration and Nationality Act of 1952, as amended
INS Legacy Immigration and Naturalization Service
IIRIRA Illegal Immigration Reform and Immigrant Responsibility Act of 1996
OMB Office of Management and Budget
PDSO Principal designated school official
SEVIS Student and Exchange Visitor Information System
SEVP Student and Exchange Visitor Program
§ Section symbol
U.S.C. United States Code
USA PATRIOT Act Uniting and Strengthening America by Providing Appropriate Tools Required to Intercept and Obstruct Terrorism Act of 2001

III. Background

A. The Student and Exchange Visitor Program

The Department of Homeland Security (DHS), U.S. Immigration and Customs Enforcement (ICE), operates the Student and Exchange Visitor Program (SEVP), which serves as the central liaison between the U.S. educational community and U.S. Government organizations that have an interest in information regarding students in F, J and M nonimmigrant status. SEVP manages and oversees significant elements of the process by which educational institutions interact with F, J and M nonimmigrants to provide information about their immigration status to the U.S. Government. ICE uses the Student and Exchange Visitor Information System (SEVIS) to track and monitor schools, participants and sponsors in exchange visitor programs, and F, J and M nonimmigrants, as well as their accompanying spouses and children, while they are in the United States and participating in the United States educational system.

ICE derives its authority to manage these programs from several sources. Under section 101(a)(15)(F)(i) of the Immigration and Nationality Act of 1952, as amended (INA), 8 U.S.C. 1101(a)(15)(F)(i), a foreign student may be admitted to the United States in nonimmigrant status to attend an academic school or language training program (F visa). Similarly, under section 101(a)(15)(M)(i) of the INA, 8 U.S.C. 1101(a)(15)(M)(i), a foreign student may be admitted to the United States in nonimmigrant status to attend a vocational or other recognized nonacademic institution (M visa). Under section 101(a)(15)(J) of the INA, 8 U.S.C. 1101(a)(15)(J), a foreign citizen may be admitted into the United States in nonimmigrant status as an exchange visitor (J visa) in an exchange program designated by the Department of State (DOS). An F or M student may enroll in a particular school only if the Secretary of Homeland Security has certified the school for the attendance of F and/or M students. *See* 8 U.S.C. 1372; 8 CFR 214.3.

Section 641 of the Illegal Immigration Reform and Immigrant Responsibility Act of 1996 (IIRIRA), Public Law 104–208, Div. C, 110 Stat. 3009–546 (codified at 8 U.S.C. 1372), authorized the creation of a program to collect current and ongoing information provided by schools and exchange visitor programs regarding F, J or M nonimmigrants during the course of their stay in the United States, using electronic reporting technology where practicable. Section 641 of IIRIRA further authorized the Secretary of Homeland Security to certify schools to participate in F or M student enrollment.

The Uniting and Strengthening America by Providing Appropriate Tools Required to Intercept and Obstruct Terrorism Act of 2001, Public Law 107–56, 115 Stat. 272 (USA PATRIOT Act), as amended, provides for the collection of alien date of entry and port of entry information for aliens whose information is collected under 8 U.S.C. 1372. Following the USA PATRIOT Act, the President issued Homeland Security Presidential Directive No. 2 (HSPD–2), requiring the Secretary of Homeland Security to conduct periodic, ongoing reviews of schools certified to accept F, J and/or M nonimmigrants to include checks for compliance with recordkeeping and reporting requirements, and authorizing termination of institutions that fail to comply. *See* 37 Weekly Comp. Pres. Docs. 1570, 1571–72 (Oct. 29, 2001).

Thereafter, section 502 of the Enhanced Border Security and Visa Entry Reform Act of 2002, Public Law 107–173, 116 Stat. 543 (codified at 8 U.S.C. 1762), directed the Secretary to review the compliance with recordkeeping and reporting requirements under 8 U.S.C. 1372 and INA section 101(a)(15)(F), (J) and (M), 8 U.S.C. 1101(a)(15)(F), (J) and (M), of all schools [1] approved for attendance by F, J and/or M students within two years of enactment, and every two years thereafter. Accordingly, and as directed by the Secretary, ICE carries out the Department's ongoing obligation to collect data from, certify, review, and recertify schools enrolling F, J and/or M students. The specific data collection requirements associated with these obligations are specified in part in legislation, *see* 8 U.S.C. 1372(c), and more comprehensively in regulations governing SEVP found at 8 CFR 214.3.

B. Student and Exchange Visitor Information System

ICE's SEVP carries out its programmatic responsibilities through SEVIS, a Web-based data entry, collection and reporting system. SEVIS provides authorized users access to reliable information on F, J and M nonimmigrants. DHS, DOS, and other government agencies, as well as SEVP-certified schools and DOS-designated exchange visitor programs, use SEVIS data to monitor nonimmigrants for the duration of their authorized period of stay in the United States while in F, J, or M nonimmigrant status. ICE requires certified schools and exchange visitor programs to regularly update information on their approved F, J and M nonimmigrants after the nonimmigrants' admission and during their stay in the United States.

SEVIS data are used to verify the continued eligibility of individuals applying for F, J and M nonimmigrant status, to facilitate port of entry screening by U.S. Customs and Border Protection, as well as to assist in the processing of immigration benefit applications, monitoring of nonimmigrant status maintenance and, as needed, facilitating timely removal.

As of October 1, 2012, SEVIS contained active records for the 1,275,285 F and M student or J exchange visitors in the United States on that date. As April 1, 2012, SEVP-certified schools numbered 9,888, and DOS had designated 1,426 sponsors for exchange visitor programs.

C. Importance of International Students to the United States

On September 16, 2011, Secretary of Homeland Security Janet Napolitano announced a ''Study in the States'' initiative to encourage the best and the brightest international students to study in the United States. The initiative established the DHS Office of Academic Engagement to focus on enhancing

[1] DHS oversees compliance of schools approved for attendance by J nonimmigrants; however, section 502(b) of this the Enhanced Border Security and Visa Entry Reform Act of 2002 assigns oversight of exchange visitor sponsors to the Secretary of State.

coordination between federal agencies dealing with U.S. student visa and exchange visitor programs; expanding and enhancing public engagement with the student, academic, and business communities; and improving current programs for international students and exchange visitors, as well as related programs for international students who have completed their course of study.[2] In cooperation with the DHS Office of Academic Engagement, ICE has analyzed and identified problem areas and considered possible solutions, and is now pursuing regulatory improvements to address some of the issues identified through ongoing stakeholder engagement.

This rulemaking was initiated in support of Secretary Napolitano's initiative, and reflects the Department's commitment to enhancing and improving the Nation's nonimmigrant student programs. The proposed rule will improve the capability of schools enrolling F and M students to assist their students in maintaining nonimmigrant status and to provide necessary oversight on behalf of the U.S. Government. The rule will increase the attractiveness of studying in the United States for foreign students by broadening study opportunities for their spouses and improving quality of life for visiting families.

IV. Discussion of Proposed Rule

A. Removing the Limit on DSO Nominations

Designated school officials (DSOs) are essential to making nonimmigrant study in the United States attractive to international students and a successful experience overall. DSOs are regularly employed members of a school administration who are located at the school and generally serve as the main point of contact within the school for F and M students and their spouses and children. *See* 8 CFR 214.3(l)(1). Consistent with DHS's authorities and responsibilities discussed above, DHS charges DSOs with the responsibility of acting as liaisons to nonimmigrant students on behalf of the schools that employ the DSOs and on behalf of the U.S. Government. Significantly, DSOs are responsible for making information and documents relating to F–1 and M–1 nonimmigrant students, including academic transcripts, available to DHS for the Department to fulfill its statutory responsibilities. 8 CFR 214.3(g).

ICE regulations at 8 CFR 214.3(l)(1)(iii) currently limit to ten (10) the maximum number of DSOs that each certified school may have at each campus at any one time, which includes up to nine DSOs and one Principal Designated School Official (PDSO). This limit was established by the former Immigration and Naturalization Service (INS) in 2002 in order to control access to SEVIS. At the time, however, the INS noted that once SEVIS was fully operational, it might reconsider the numerical limits on the number of DSOs. *See* 67 FR 76256, 76260. Since SEVIS is now fully operational and equipped to appropriately control access to SEVIS, ICE seeks to revisit the DSO limitation in this proposed rulemaking.

To date, SEVP has certified nearly 10,000 schools with approximately 30,500 DSOs. While the average SEVP-certified school has fewer than three DSOs, SEVP recognizes that F and M students often cluster at schools within states that attract a large percentage of nonimmigrant student attendance within the United States. As such, schools in the seven states with the greatest F and M student enrollment currently represent 55 percent of the overall F and M nonimmigrant enrollment in the United States.[3] This has raised concerns within the U.S. educational community that the current DSO limit of ten per campus is too constraining, particularly in schools where F and M students are heavily concentrated or where campuses are in dispersed geographic locations. The Homeland Security Academic Advisory Council (HSAAC)—an advisory committee composed of prominent university and academic association presidents, which advises the Secretary and senior DHS leadership on academic and international student issues—included in its September 20, 2012 recommendations to DHS a recommendation to increase the number of DSOs allowed per school or eliminating the current limit of 10 DSOs per school. Upon review, SEVP has concluded that, in many circumstances, the elimination of a DSO limit may improve the capability of DSOs to meet their liaison, reporting and oversight responsibilities, as required by 8 CFR 214.3(g).

Accordingly, DHS proposes to eliminate the maximum limit of DSOs in favor of a more flexible approach. The proposed rule would not set a maximum number of permissible DSOs, but instead would allow school officials to nominate an appropriate number of DSOs for SEVP approval based upon the specific needs of the school. This proposed rule would not alter SEVP's current authority to approve or reject a DSO or PDSO nomination. *See* 214.3(l)(2). The proposed rule also would maintain SEVP's authority to withdraw a previous DSO or PDSO designation by a school of an individual. *Id.* In addition, SEVP would not permit DSO-level access to SEVIS prior to SEVP approval of a DSO nomination because that access would undermine the nomination process and open the SEVIS program to possible misuse. The proposed rule codifies this limitation. *See* proposed 8 CFR 214.3(l)(1)(iii).

The proposed flexibility in nominating DSOs will permit schools to better meet students' needs as well as the Department's reporting and other school certification requirements.

B. Study by F–2 and M–2 Spouses and Children

This rulemaking also proposes to amend the benefits allowable for the accompanying spouse and children (hereafter referred to as F–2 or M–2 nonimmigrants) of an F–1 or M–1 student. Prior to January 1, 2003, there was no restriction on the classes or course of study that an F–2 or M–2 spouse or child could undertake.

On May 16, 2002, the former INS proposed to prohibit full time study by F–2 and M–2 spouses and to restrict such study by F–2 and M–2 children to prevent an alien who should be properly classified as an F–1 or M–1 nonimmigrant from coming to the United States as an F–2 or M–2 nonimmigrant and, without adhering to other legal requirements, attending school full time. 67 FR 34862, 34871. The INS proposed to permit avocational and recreational study for F–2 and M–2 spouses and children and, recognizing that education is one of the chief tasks of childhood, to permit F–2 and M–2 children to be enrolled full time in elementary through secondary school (kindergarten through twelfth grade). *Id.* The INS believed it unreasonable to assume that Congress would intend that a bona fide nonimmigrant student could bring his or her children to the United States but not be able to provide for their primary and secondary education. *Id.; see also* 67 FR 76256, 76266. The INS further proposed that if an F–2 or M–2 spouse wanted to enroll full time in a full course of study, the F–2 or M–2 spouse should apply for and obtain a change of his or her nonimmigrant classification to that of an F–1, J–1, or M–1 nonimmigrant. *Id.*

[2] *See http://studyinthestates.dhs.gov.*

[3] *See* SEVP, Student and Exchange Visitor Information System, General Summary Quarterly Review for the quarter ending Mar. 31, 2012 (Apr. 2, 2012), available at *http://www.ice.gov/doclib/sevis/pdf/quarterly_rpt.pdf.*

The INS finalized these rules on December 11, 2002. 67 FR 76256, codified at 8 CFR 214.2(f)(15)(ii) and 8 CFR 214.2(m)(17)(ii). In the final rule, the INS noted that commenters suggested the INS remove the language ''avocational or recreational'' from the types of study that may be permitted by F–2 and M–2 dependents, as DSOs may have difficulty determining what study is avocational or recreational and what is not. In response to the comments, the INS clarified that if a student engages in study to pursue a hobby or if the study is that of an occasional, casual, or recreational nature, such study may be considered as avocational or recreational. 67 FR at 76266.

DHS maintains the long-standing view that an F–2 or M–2 nonimmigrant who wishes to engage in a full course of study in the United States, other than elementary or secondary school study (kindergarten through twelfth grade), should apply for and obtain approval to change his or her nonimmigrant classification to F–1, J–1, or M–1. *See* 8 CFR 214.2(f)(15)(ii). DHS recognizes, however, that the United States is engaged in a global competition to attract the best and brightest international students to study in our schools. Access of F–2 or M–2 nonimmigrants (totaling approximately 83,932 individuals as of June 2012) to education while in the United States in many instances would enhance the quality of life for these visiting families. The existing limitations on study to F–2 or M–2 nonimmigrant education potentially deter high quality F–1 and M–1 students from studying in the United States.[4]

Accordingly, DHS proposes to relax its prohibition on F–2 and M–2 nonimmigrant study by permitting F–2 and M–2 nonimmigrant spouses and children to engage in study in the United States at SEVP-certified schools that does not amount to a full course of study. Under the proposed rule, F–2 and M–2 nonimmigrants would be permitted to enroll in less than a ''full course of study,'' as defined at 8 CFR 214.2(f)(6)(i)(A) through (D) and 8 CFR 214.2(m)(9)(i)–(iv), at an SEVP-certified school and in study described in 8 CFR 214.2(f)(6)(i)(A) through (D) and 8 CFR 214.2(m)(9)(i)–(iv).[5] As a point of clarification, although 8 CFR 214.2(f)(6)(i)(B) and 8 CFR 214.2(m)(9)(i) define full course of study at an undergraduate college or university (F nonimmigrants) or at a community college or junior college (M nonimmigrants) to include lesser course loads if needed to complete a course of study during a current term, this proposed rule would view such study as authorized for F–2 or M–2 nonimmigrants. Over time, such enrollment in less than a full course of study could lead to attainment of a degree, certificate or other credential. To maintain valid F–2 or M–2 status, however, the F–2 or M–2 nonimmigrant would not be permitted at any time to enroll in a total number of credit hours that would amount to a ''full course of study,'' as defined by regulation.

In addition, the proposed change would limit F–2 and M–2 study, other than avocational or recreational study, to SEVP-certified schools. This requirement would make it more likely that the educational program pursued by the F–2 or M–2 nonimmigrant is a bona fide program and that studies at the school are unlikely to raise national security concerns, in light of their successful completion of the SEVP certification process. Under the proposed rule, the F–2 or M–2 nonimmigrants could still participate full-time in avocational or recreational study (i.e., hobbies and recreational studies). If an F–2 or M–2 nonimmigrant wanted to enroll in a full course of academic study, however, he or she would need to apply for and obtain approval to change his or her nonimmigrant classification to F–1, J–1 or M–1. Similarly, as noted, the proposed rule would not change existing regulations allowing full-time study by children in elementary or secondary school (kindergarten through twelfth grade).

This proposed rule would not change the record keeping and reporting responsibilities of DSOs with regard to F–2 or M–2 nonimmigrants to DHS. DSOs at the school the F–1 or M–1 student attends currently have reporting responsibility for maintaining F–2 or M–2 nonimmigrant personal information in SEVIS. *See* 8 CFR 214.3(g)(1). In addition, to facilitate maintenance of F or M nonimmigrant status and processing of future applications for U.S. immigration benefits, F and M nonimmigrants are encouraged to retain personal copies of the information supplied for admission, visas, passports, entry, and benefit-related documents indefinitely.[6] Similarly, under this proposed rule, DHS recommends an F–2 or M–2 nonimmigrant should separately maintain (i.e., obtain and retain) his or her academic records. Maintenance of these records is essential to verify whether or not the enrollment is a full course of study and protects the F–2 or M–2 nonimmigrant's ability to prove maintenance of status and eligibility to apply for a change of status at a future time, should that be desired, while not adding to the reporting responsibilities of DSOs. As F and M nonimmigrants already are encouraged to keep a number of immigration-related records, the suggested additional maintenance of academic records in an already existing file of immigration records would impose minimal marginal cost. However, DHS requests comment on the burden of storing this additional record. This proposed rule would not extend F–2 or M–2 nonimmigrants' access to any other nonimmigrant benefits beyond those specifically identified in regulations applicable to F–2 or M–2 nonimmigrants. *See* 8 CFR 214.2(f)(15) and 8 CFR 214.2(m)(17).

V. Regulatory Analyses

We developed this proposed rule after considering numerous statutes and executive orders related to rulemaking. Below we summarize our analyses based on 13 of these statutes or executive orders.

A. Executive Orders 13563 and 12866: Regulatory Planning and Review

Executive Orders 13563 and 12866 direct agencies to assess the costs and benefits of available regulatory alternatives and, if regulation is necessary, to select regulatory approaches that maximize net benefits (including potential economic, environmental, public health and safety effects, distributive impacts, and

[4] *See* Letter of April 13, 2011 from NAFSA: Association of International Educators to DHS General Counsel Ivan Fong, available in the federal rulemaking docket for this rulemaking at *www.regulations.gov,* requesting that DHS eliminate the limitation on study by F–2 spouses to only ''avocational or recreational'' study because the limitation ''severely restricts the opportunities for F–2 dependents, such as spouses of F–1 students, to make productive use of their time in the United States.''

[5] As a general matter, a full course of study for an F–1 academic student in an undergraduate program is 12 credit hours per academic term. Similarly, a full course of study for an M–1 vocational student consists of 12 credit hours per academic term at a community college or junior college. For other types of academic or vocational study, the term ''full course of study'' is defined in terms of ''clock hours'' per week depending on the specific program. See 8 CFR 214.2(f)(6)(i)(A)–(D) and 8 CFR 214.2(m)(9)(i)–(iv).

[6] ICE encourages retention of these records in the Supporting Statement for SEVIS, OMB No. 1653–0038, Question 7(d). Additionally, recordkeeping by F and M nonimmigrants is encouraged in existing regulation, in particular for the Form I–20, Certificate of Eligibility for Nonimmigrant Student (F–1 or M–1) Status. *See* 8 CFR 214.2(f)(2) and 214.2(m)(2). Moreover, nonimmigrant students may wish to retain a copy of the Form I–901, Fee Remittance for Certain F, J, and M Nonimmigrants, as proof of payment. *See generally* 8 CFR 214.13(g)(3).

equity). Executive Order 13563 emphasizes the importance of quantifying both costs and benefits, of reducing costs, of harmonizing rules, and of promoting flexibility. This rule is a ''significant regulatory action,'' although not an economically significant regulatory action, under section 3(f) of Executive Order 12866. Accordingly, the Office of Management and Budget (OMB) has reviewed this regulation.

1. Summary

The proposed rule would eliminate the limit on the number of DSOs a school may have and establish eligibility for F–2 and M–2 nonimmigrants to engage in less than a full course of study at SEVP-certified schools. If a particular school does not wish to add additional DSOs, this rule would impose no additional costs on that school. Based on feedback from the SEVP-certified schools, however, DHS believes up to 88 schools may choose to take advantage of this flexibility and designate additional DSOs. These SEVP-certified schools would incur costs related to current DHS DSO training and documentation requirements. DHS estimates the total 10-year discounted cost of allowing additional DSOs to be approximately $127,000 at a seven percent discount rate and approximately $150,000 at a three percent discount rate. Regarding the provision of the rule that would establish eligibility for less than a full course of study by F–2 and M–2 nonimmigrants, DHS is once again providing additional flexibilities. As this rule would not require the F–2 or M–2 nonimmigrant to submit any new documentation or fees to SEVIS or the SEVP-certified school to comply with any DHS requirements, DHS does not believe there are any costs associated with establishing eligibility for F–2 and M–2 nonimmigrants to engage in less than full courses of study at SEVP-certified schools.

2. Designated School Officials

The only anticipated costs for SEVP-certified schools to increase the number of DSOs above the current limit of ten per school or campus derive from the existing requirements for the training and reporting to DHS of additional DSOs. DHS anticipates the number of schools that will avail themselves of this added flexibility will be relatively small. As of April 2012, there are 9,888 SEVP-certified schools (18,733 campuses), with approximately 30,500 total DSOs, and an average of 3.08 DSOs per school. However, there are only 88 SEVP-certified schools that currently employ the maximum number of DSOs.

DHS is unable to estimate with precision the number of additional DSOs schools may choose to add. While some of the 88 SEVP-certified schools that currently employ the maximum number of DSOs may not add any additional DSOs, others may add several additional DSOs. DHS's best estimate is that these 88 SEVP-certified schools will on average designate three additional DSOs, for a total of 264 additional DSOs. DHS estimates that current training and documentation requirements for a DSO to begin his or her position equate to seven hours total in the first year. DHS does not track wages paid to DSOs; however, according to the U.S. Department of Labor, Bureau of Labor Statistics, the average wage rate for the occupation ''Office and Administrative Support Workers, All Other'' [7] is estimated to be $15.67 per hour.[8] DHS welcomes public comments as to whether there is any additional training beyond the already identified 7 hours, that may be required as a result of this proposed rule, and also whether the average wage rate used to calculate the costs for DSOs is reasonable. When the costs for employee benefits such as paid leave and health insurance are included, the full cost to the employer for an hour of DSO time is estimated at $21.94.[9] Therefore, the estimated burden hour cost as a result of designating 264 additional DSOs is estimated at $40,545 in the first year (7 hours × 264 DSOs × $21.94). On a per school basis, DHS expects these SEVP-certified schools to incur an average of $460 dollars in costs in the initial year (7 hours × 3 new DSOs per school × $21.94). DHS notes that there are no recurrent annual training requirements mandated by DHS for DSOs once they have been approved as a DSO.

After the initial year, DHS expects the SEVP-certified schools that designate additional DSOs to incur costs for replacements, as these 264 new DSOs experience normal turnover. Based on information from the Bureau of Labor Statistics, we estimate an average annual turnover rate of approximately 36 percent.[10] Based on our estimate of 264 additional DSOs as a result of this rulemaking, we expect these schools will designate 95 replacement DSOs annually (264 DSOs × 36% annual turnover) in order to maintain these 264 additional DSOs. As current training and documentation requirements are estimated at seven hours per DSO, these SEVP-certified schools would incur total additional costs of $14,590 annually (7 hours × 95 replacement DSOs × $21.94) after the initial year. On a per school basis, DHS expects these schools to incur an average of $165 dollars of recurring costs related to turnover after the initial year (7 hours × 3 new DSOs per school × 36% annual turnover × $21.94).

This rule will address concerns within the U.S. education community that the current DSO limit of 10 is too constraining. For example, allowing schools to request additional staff able to handle DSO responsibilities will increase flexibility in school offices and enable them to better manage their programs. This flexibility is particularly important in schools where F and M nonimmigrants are heavily concentrated or where instructional sites are in dispersed geographic locations. It will also assist schools in coping with seasonal surges in data entry requirements (e.g., start of school year reporting).

3. F–2 and M–2 Nonimmigrants

As of June 2012, SEVIS records indicate that there are 83,354 F–2 nonimmigrants in the United States, consisting of approximately 54 percent spouses and 46 percent children. Though both spouses and children may participate in study that is less than a full course of study at SEVP-certified schools under the proposed rule, DHS assumes that spouses are more likely to avail themselves of this opportunity because most children are likely to be enrolled full-time in elementary or secondary education (kindergarten through twelfth grade). Though there may be exceptions to this assumption, for example, a child in high school taking a college course, the majority of F–2 nonimmigrants benefitting from this provision are likely to be spouses. DHS only uses this assumption to assist in estimating the number of F–2 nonimmigrants likely to benefit from the proposed rule, which could be as high

[7] The existing Paperwork Reduction Act control number OMB No. 1653–0038 for SEVIS uses the occupation ''Office and Administrative Support Workers, All Other'' as a proxy for DSO employment.

[8] May 2010 Occupational Employment and Wage Estimates, National Cross-Industry Estimates, ''43–9799 Office and Administrative Support Workers, All Other*,'' Hourly Mean ''H-mean,'' Retrieved Mar. 12, 2012, from *http://www.bls.gov/oes/oes_dl.htm*.

[9] Employer Costs for Employee Compensation, Dec. 2010, Retrieved Mar. 12, 2012, from *http://www.bls.gov/news.release/archives/ecec_03092011.pdf*. Calculated by dividing total private employer compensation costs of 27.75 per hour by average private sector wage and salary costs of $19.64 per hour (yields a benefits multiplier of approximately 1.4 × wages).

[10] Job Openings and Labor Turnover—Jan. 2011, page 5, Retrieved Mar. 12, 2012 from *http://www.bls.gov/news.release/archives/jolts_03112011.pdf* reported that for 2010, annual total separations were 35.7 percent of employment.

as 45,011 (83,354 × 54%), if 100 percent of F–2 spouses participate, but is likely to be lower as DHS does not expect that all F–2 spouses would take advantage of the opportunity. DHS requests comment on these assumptions and estimates. DHS does not believe there are any direct costs associated with establishing eligibility for F–2 nonimmigrants to engage in less than full courses of study at SEVP-certified schools. The rule would not require the F–2 nonimmigrant to submit any new documentation or fees to SEVIS or the SEVP-certified school to comply with any DHS requirements.

As of June 2012, SEVIS records indicate that there are 578 M–2 nonimmigrants in the United States. Pursuant to this rulemaking, these M–2 spouses and children would be eligible to take advantage of the option to participate in study that is less than a full course of study at SEVP-certified schools. Approximately 39 percent of M–2 nonimmigrants are spouses and 61 percent are children. Again, DHS assumes that spouses would comprise the majority of M–2 nonimmigrants to benefit from this provision. This number could be as high as 225 M–2 nonimmigrants (578 × 39%), but is likely to be lower as DHS does not expect that all M–2 spouses would take advantage of the opportunity. DHS requests comment on these assumptions and estimates. Under the same procedures governing F–2 nonimmigrants, the M–2 nonimmigrants would not be required to submit any new documentation or fees to SEVIS or the SEVP-certified school to comply with any DHS requirements.

The rule would provide greater incentive for international students to study in the United States by permitting accompanying spouses and children of academic and vocational nonimmigrant students in F–1 or M–1 status to enroll in study at a SEVP-certified school if not a full course of study. DHS recognizes that the United States is engaged in a global competition to attract the best and brightest international students to study in our schools. The ability of F–2 or M–2 nonimmigrants to have access to education while in the United States is in many instances central to maintaining a satisfactory quality of life for these visiting families.

3. Conclusion

The proposed rule would eliminate the limit on the number of DSOs a school may have and establish eligibility for F–2 and M–2 nonimmigrants to engage in less than a full course of study at SEVP-certified schools. If a particular school does not wish to add additional DSOs, this rule would impose no additional costs on that school. DHS believes up to 88 schools may choose to take advantage of this flexibility and designate additional DSOs. These SEVP-certified schools would incur costs related to current DHS DSO training and documentation requirements; DHS estimates the total 10-year discounted cost to be approximately $127,000 at a seven percent discount rate and approximately $150,000 at a three percent discount rate. DHS does not believe there are any costs associated with establishing eligibility for F–2 and M–2 nonimmigrants to engage in less than full courses of study at SEVP-certified schools as this rule would not require the F–2 or M–2 nonimmigrant to submit any new documentation or fees to SEVIS or the SEVP-certified school to comply with any DHS requirements.

The table below summarizes the total costs and benefits of the proposed rule to allow additional DSOs at schools and permit accompanying spouses and children of nonimmigrant students of F–1 or M–1 status to enroll in study at a SEVP-certified school if not a full course of study. We welcome public comments that specifically address the nature and extent of any potential economic impacts of the proposed amendments that we may not have identified.

	DSOs	F–2 and M–2 nonimmigrants	Total rulemaking
10-Year Cost, Discounted at 7%	$127,000	$0	$127,000
Monetized Benefits	N/A	N/A	N/A
Non-monetized Benefits	Increased flexibility in school offices to enable them to better manage their programs.	Greater incentive for international students to study in the U.S.	
Net Benefits	N/A	N/A	N/A

B. Small Entities

Under the Regulatory Flexibility Act (5 U.S.C. 601–612), we have considered whether this proposed rule would have a significant economic impact on a substantial number of small entities. The term ''small entities'' comprises small businesses, not-for-profit organizations that are independently owned and operated and are not dominant in their fields, and governmental jurisdictions with populations of less than 50,000. This proposed rule would eliminate the limit on the number of DSOs a school may nominate and permits F–2 and M–2 nonimmigrants to engage in less than a full course of study at SEVP-certified schools. Although some of the schools impacted by these proposed changes may be considered as small entities as that term is defined in 5 U.S.C. 601(6), the effect of this rule would be to benefit those schools by expanding their ability to nominate DSOs and to enroll F–2 and M–2 nonimmigrants for less than a full course of study.

In the subsection above, DHS has discussed the costs and benefits of this rule. The purpose of this rule is to provide additional regulatory flexibilities, not impose costly mandates on small entities. DHS again notes that the decision by schools to avail themselves of additional DSOs or F–2 or M–2 nonimmigrants who wish to pursue less than a full course of study is an entirely voluntary one and schools will do so only if the benefits to them outweigh the potential costs. In particular, removing the limit on the number of DSOs a school may designate allows schools the flexibility to better cope with seasonal surges in data entry requirements due to start of school year reporting. Accordingly, DHS certifies this rule will not have a significant economic impact on a substantial number of small entities.

DHS, however, welcomes comments on these conclusions. Members of the public should please submit a comment, as described in this proposed rule under ''Public Participation,'' if they think that their business, organization, or governmental jurisdiction qualifies as a small entity and that this proposed rule would have a significant economic impact on it. It would be helpful if commenters provide DHS with as much of the following information as possible. Is the commenter's school currently SEVP-certified? If not, does the school plan to seek certification? Please describe the type and extent of the direct impact on the commenter's

school. Please describe any recommended alternative measures that would mitigate the impact on a small school.

C. Assistance for Small Entities

Under section 213(a) of the Small Business Regulatory Enforcement Fairness Act of 1996, Public Law 104–121, we want to assist small entities in understanding this proposed rule so that they can better evaluate its effects on them and participate in the rulemaking. If the proposed rule would affect your small business, organization, or governmental jurisdiction and you have questions concerning its provisions or options for compliance, please consult the SEVP at the **FOR FURTHER INFORMATION CONTACT** information above. The Department will not retaliate against small entities that question or complain about this rule or any policy or action of the SEVP.

D. Collection of Information

This information collection is covered under the existing Paperwork Reduction Act control number OMB No. 1653–0038 for the Student and Exchange Visitor Information System (SEVIS). This proposed rule would call for no new collection of information under the Paperwork Reduction Act of 1995 (44 U.S.C. 3501–3520).

E. Federalism

A rule has implications for federalism under Executive Order 13132, Federalism, if it has a substantial direct effect on State or local governments and would either preempt State law or impose a substantial direct cost of compliance on them. We have analyzed this proposed rule under that Order and have determined that it does not have implications for federalism.

F. Unfunded Mandates Reform Act

This rule will not result in the expenditure by state, local and tribal governments, in the aggregate, or by the private sector of $100 million (adjusted for inflation) or more in any one year, and it will not significantly or uniquely affect small governments. Therefore, no actions were deemed necessary under the provisions of the Unfunded Mandates Reform Act of 1995.

G. Taking of Private Property

This proposed rule would not cause a taking of private property or otherwise have taking implications under Executive Order 12630, Governmental Actions and Interference With Constitutionally Protected Property Rights.

H. Civil Justice Reform

This proposed rule meets applicable standards in sections 3(a) and 3(b)(2) of Executive Order 12988, Civil Justice Reform, to minimize litigation, eliminate ambiguity, and reduce burden.

I. Protection of Children

We have analyzed this proposed rule under Executive Order 13045, Protection of Children From Environmental Health Risks and Safety Risks. This rule is not an economically significant rule and would not create an environmental risk to health or risk to safety that might disproportionately affect children.

J. Indian Tribal Governments

This proposed rule does not have tribal implications under Executive Order 13175, Consultation and Coordination With Indian Tribal Governments, because it would not have a substantial direct effect on one or more Indian tribes, on the relationship between the Federal Government and Indian tribes, or on the distribution of power and responsibilities between the Federal Government and Indian tribes.

K. Energy Effects

We have analyzed this proposed rule under Executive Order 13211, Actions Concerning Regulations That Significantly Affect Energy Supply, Distribution, or Use. We have determined that it is not a ''significant energy action'' under that order, because it is not a ''significant regulatory action'' under Executive Order 12866 and is not likely to have a significant adverse effect on the supply, distribution, or use of energy.

L. Technical Standards

The National Technology Transfer and Advancement Act (15 U.S.C. 272 note) directs agencies to use voluntary consensus standards in their regulatory activities unless the agency provides Congress, through OMB, with an explanation of why using these standards would be inconsistent with applicable law or otherwise impractical. Voluntary consensus standards are technical standards (e.g., specifications of materials, performance, design, or operation; test methods; sampling procedures; and related management systems practices) that are developed or adopted by voluntary consensus standards bodies. This proposed rule does not use technical standards. Therefore, we did not consider the use of voluntary consensus standards.

M. Environment

U.S. Department of Homeland Security Management Directive (MD) 023–01 establishes procedures that the Department and its components use to comply with the National Environmental Policy Act of 1969 (NEPA), 42 U.S.C. 4321–4375, and the Council on Environmental Quality (CEQ) regulations for implementing NEPA, 40 CFR Parts 1500–1508. CEQ regulations allow federal agencies to establish categories of actions that do not individually or cumulatively have a significant effect on the human environment and, therefore, do not require an Environmental Assessment or Environmental Impact Statement. 40 CFR 1508.4. The MD 023–01 lists the Categorical Exclusions that the Department has found to have no such effect. MD 023–01 app. A tbl.1.

For an action to be categorically excluded, MD 023–01 requires the action to satisfy each of the following three conditions:

(1) The entire action clearly fits within one or more of the Categorical Exclusions;

(2) The action is not a piece of a larger action; and

(3) No extraordinary circumstances exist that create the potential for a significant environmental effect. MD 023–01 app. A § 3.B(1)–(3).

Where it may be unclear whether the action meets these conditions, MD 023–01 requires the administrative record to reflect consideration of these conditions. MD 023–01 app. A § 3.B.

Here, the proposed rule would amend 8 CFR parts 214.2 and 214.3 relating to the U.S. Immigration and Customs Enforcement Student and Exchange Visitor Program. This proposed rule would remove the regulatory cap of ten designated school officials per campus participating in the SEVP and would permit certain dependents to enroll in less than a full course of study at SEVP-certified schools.

ICE has analyzed this proposed rule under MD 023–01. ICE has made a preliminary determination that this action is one of a category of actions that do not individually or cumulatively have a significant effect on the human environment. This proposed rule clearly fits within the Categorical Exclusion found in MD 023–01, Appendix A, Table 1, number A3(d): ''Promulgation of rules . . . that interpret or amend an existing regulation without changing its environmental effect.'' This proposed rule is not part of a larger action. This proposed rule presents no extraordinary circumstances creating the potential for significant environmental effects.

Therefore, this proposed rule is categorically excluded from further NEPA review.

ICE seeks any comments or information that may lead to the discovery of any significant environmental effects from this proposed rule.

List of Subjects in 8 CFR Part 214

Administrative practice and procedure, Aliens, Cultural exchange programs, Employment, Foreign officials, Health professions, Reporting and recordkeeping requirements, Students.

For the reasons discussed in the preamble, DHS proposes to amend Chapter I of Title 8 of the Code of Federal Regulations as follows:

PART 214 — NONIMMIGRANT CLASSES

■ 1. The authority citation for part 214 continues to read as follows:

Authority: 8 U.S.C. 1101, 1102, 1103, 1182, 1184, 1186a, 1187, 1221, 1281, 1282, 1301–1305 and 1372; sec.643, Pub. L. 104–208, 110 Stat. 3009–708; Pub. L. 106–386, 114 Stat. 1477–1480; section 141 of the Compacts of Free Association with the Federated States of Micronesia and the Republic of the Marshall Islands, and with the Government of Palau, 48 U.S.C. 1901 note, and 1931 note, respectively; 48 U.S.C. 1806; 8 CFR part 2.

■ 2. In § 214.2 revise paragraph (f)(15)(ii) and paragraph (m)(17)(ii) to read as follows:

§ 214.2 Special requirements for admission, extension, and maintenance of status.

* * * * *

(f) * * *

(15) * * *

(i) * * *

(ii) *Study.*

(A) *F–2 post-secondary/vocational study.*

(1) *Authorized Study at SEVP-Certified Schools.* An F–2 spouse or F–2 child may enroll in less than a full course of study, as defined in 8 CFR 214.2(f)(6)(i)(A)–(D) and 8 CFR 214.2(m)(9)(i)–(iv), in any course of study described in 8 CFR 214.2(f)(6)(i)(A)–(D) or 214.2(m)(9)(i)–(iv) at an SEVP-certified school. Notwithstanding 8 CFR 214.2(f)(6)(i)(B) and 8 CFR 214.2(m)(9)(i), study at an undergraduate college or university or at a community college or junior college is not a full course of study solely because the F–2 nonimmigrant is engaging in a lesser course load to complete a course of study during the current term. An F–2 spouse or F–2 child enrolled in less than a full course of study is not eligible to engage in employment pursuant to paragraphs (9) and (10) of this subsection.

(2) *Full Course of Study.* Subject to paragraph (f)(15)(ii)(B) and (18), an F–2 spouse and child may engage in a full course of study only by applying for and obtaining a change of status to F–1, M–1 or J–1 nonimmigrant status, as appropriate, before beginning a full course of study. However, an F–2 spouse and child may engage in study that is avocational or recreational in nature, up to and including on a full-time basis.

(B) *F–2 elementary or secondary study.* An F–2 child may engage in full-time study, including any full course of study, in any elementary or secondary school (kindergarten through twelfth grade).

(C) An F–2 spouse and child violates his or her nonimmigrant status by enrolling in any study except as provided in paragraph (f)(15)(ii)(A)(2) or (B) of this section.

* * * * *

(m) * * *

(17) * * *

(i) * * *

(ii) *Study.*

(A) *M–2 post-secondary/vocational study.*

(1) *Authorized Study at SEVP-Certified Schools.* An M–2 spouse or M–2 child may enroll in less than a full course of study, as defined in 8 CFR 214.2(f)(6)(i)(A)–(D) or 214.2(m)(9)(i)–(v), in any course of study described in 8 CFR 214.2(m)(9)(i)–(v) at an SEVP-certified school. Notwithstanding 8 CFR 214.2(f)(6)(i)(B) and 8 CFR 214.2(m)(9)(i), study at an undergraduate college or university or at a community college or junior college is not a full course of study solely because the M–2 nonimmigrant is engaging in a lesser course load to complete a course of study during the current term. An M–2 spouse or M–2 child enrolled in less than a full course of study is not eligible to engage in employment pursuant to paragraph (14) of this subsection.

(2) *Full Course of Study.* Subject to paragraph (m)(17)(ii)(B), an M–2 spouse and child may engage in a full course of study only by applying for and obtaining a change of status to F–1, M–1, or J–1 status, as appropriate, before beginning a full course of study. However, an M–2 spouse and M–2 child may engage in study that is avocational or recreational in nature, up to and including on a full-time basis.

(B) *M–2 elementary or secondary study.* An M–2 child may engage in full-time study, including any full course of study, in any elementary or secondary school (kindergarten through twelfth grade).

(C) An M–2 spouse or child violates his or her nonimmigrant status by enrolling in any study except as provided in paragraph (m)(17)(ii)(A) or (B) of this section.

* * * * *

■ 3. Revise section 214.3 paragraph (l)(1)(iii) to read as follows:

§ 214.3 Approval of schools for enrollment of F and M nonimmigrants.

(l) * * *

(1) * * *

(i) * * *

(ii) * * *

(iii) School officials may nominate as many DSOs in addition to PDSOs as they determine necessary to adequately provide recommendations to F and/or M students enrolled at the school regarding maintenance of nonimmigrant status and to support timely and complete recordkeeping and reporting to DHS, as required by this section. School officials must not permit a DSO or PDSO nominee access to SEVIS until DHS approves the nomination.

* * * * *

Rand Beers,

Acting Secretary of Homeland Security.

[FR Doc. 2013–27898 Filed 11–20–13; 8:45 am]

BILLING CODE 9111–28–P

DEPARTMENT OF TRANSPORTATION

Federal Aviation Administration

14 CFR Part 39

[Docket No. FAA–2013–0997; Directorate Identifier 2013–CE–044–AD]

RIN 2120–AA64

Airworthiness Directives; Slingsby Aviation Ltd. Airplanes

AGENCY: Federal Aviation Administration (FAA), Department of Transportation (DOT).

ACTION: Notice of proposed rulemaking (NPRM).

SUMMARY: We propose to adopt a new airworthiness directive (AD) for Slingsby Aviation Ltd. Model T67M260 airplanes. This proposed AD results from mandatory continuing airworthiness information (MCAI) originated by an aviation authority of another country to identify and correct an unsafe condition on an aviation product. The MCAI describes the unsafe condition as cracked horizontal stabilizer attachment brackets, which could lead to separation of the

horizontal stabilizer and result in loss of control. We are issuing this proposed AD to require actions to address the unsafe condition on these products.

DATES: We must receive comments on this proposed AD by January 6, 2014.

ADDRESSES: You may send comments by any of the following methods:

- *Federal eRulemaking Portal:* Go to *http://www.regulations.gov.* Follow the instructions for submitting comments.
- *Fax:* (202) 493–2251.
- *Mail:* U.S. Department of Transportation, Docket Operations, M–30, West Building Ground Floor, Room W12–140, 1200 New Jersey Avenue SE., Washington, DC 20590.
- *Hand Delivery:* U.S. Department of Transportation, Docket Operations, M–30, West Building Ground Floor, Room W12–140, 1200 New Jersey Avenue SE., Washington, DC 20590, between 9 a.m. and 5 p.m., Monday through Friday, except Federal holidays.

For service information identified in this proposed AD, contact Slingsby Advanced Composites, Ings Lane, Kirbymoorside, York, YO62 6EZ, United Kingdom, telephone: +44 (0) 1751 432474; fax +44 (0) 1751 433016, Internet: *www.marshall-slingsby.com.* You may review this referenced service information at the FAA, Small Airplane Directorate, 901 Locust, Kansas City, Missouri 64106. For information on the availability of this material at the FAA, call (816) 329–4148.

Examining the AD Docket

You may examine the AD docket on the Internet at *http://www.regulations.gov* by searching for and locating it in Docket No. FAA–2013–0997; or in person at the Docket Management Facility between 9 a.m. and 5 p.m., Monday through Friday, except Federal holidays. The AD docket contains this proposed AD, the regulatory evaluation, any comments received, and other information. The street address for the Docket Office (telephone (800) 647–5527) is in the **ADDRESSES** section. Comments will be available in the AD docket shortly after receipt.

FOR FURTHER INFORMATION CONTACT: Mike Kiesov, Aerospace Engineer, FAA, Small Airplane Directorate, 901 Locust, Room 301, Kansas City, Missouri 64106; telephone: (816) 329–4144; fax: (816) 329–4090; email: *mike.kiesov@faa.gov.*

SUPPLEMENTARY INFORMATION:

Comments Invited

We invite you to send any written relevant data, views, or arguments about this proposed AD. Send your comments to an address listed under the **ADDRESSES** section. Include ''Docket No. FAA–2013–0997; Directorate Identifier 2013–CE–044–AD'' at the beginning of your comments. We specifically invite comments on the overall regulatory, economic, environmental, and energy aspects of this proposed AD. We will consider all comments received by the closing date and may amend this proposed AD because of those comments.

We will post all comments we receive, without change, to *http://regulations.gov,* including any personal information you provide. We will also post a report summarizing each substantive verbal contact we receive about this proposed AD.

Discussion

The European Aviation Safety Agency (EASA), which is the Technical Agent for the Member States of the European Community, has issued AD No. 2012–0169, dated August 31, 2012 (referred to after this as ''the MCAI''), to correct an unsafe condition for the specified products. The MCAI states:

> Several cases have been reported of cracked horizontal stabiliser attachment brackets on Slingsby T67 aeroplanes.
>
> This condition, if not detected and corrected, could lead to separation of the horizontal stabiliser and consequent loss of control of the aeroplane.
>
> Prompted by these reports, Slingsby issued Service Bulletin (SB) 179 to provide instructions for repetitive inspections. The CAA UK, the State of Design authority at the time, issued AD 001–12–2002,which was later superseded by AD G–2005–0004 (EASA approval 2005–564) to require repetitive inspections and, depending on findings, replacement of the affected brackets.
>
> Since that AD was issued, Slingsby published SB 179 issue 4, which removed the Model T67M260–T3A from the Applicability (all aeroplanes of this Model are confirmed to have been scrapped) and clarified that replacement of the affected aluminum brackets with titanium brackets (Slingsby Modification M988A or B) constitutes terminating action for the repetitive inspections.
>
> For the reasons described above, this AD retains the requirements of CAA UK AD G–2005–0004, which is superseded, removes the Model T67M260–T3A from the Applicability and confirms that installing titanium brackets constitutes terminating action for the repetitive inspection requirements of this AD.

You may examine the MCAI on the Internet at *http://www.regulations.gov* by searching for and locating it in Docket No. FAA–2013–0997.

Relevant Service Information

Slingsby Advanced Composites Ltd. has issued Service Bulletin No. 179, Issue 4, dated March 15, 2007. The actions described in this service information are intended to correct the unsafe condition identified in the MCAI.

FAA's Determination and Requirements of the Proposed AD

This product has been approved by the aviation authority of another country, and is approved for operation in the United States. Pursuant to our bilateral agreement with this State of Design Authority, they have notified us of the unsafe condition described in the MCAI and service information referenced above. We are proposing this AD because we evaluated all information and determined the unsafe condition exists and is likely to exist or develop on other products of the same type design.

Costs of Compliance

We estimate that this proposed AD will affect 11 products of U.S. registry. We also estimate that it would take about 2 work-hours per product to comply with the basic inspection of the aluminum horizontal stabilizer attachment brackets requirement of this proposed AD. The average labor rate is $85 per work-hour.

Based on these figures, we estimate the cost of the proposed AD on U.S. operators to be $1,870, or $170 per product.

In addition, we estimate that any necessary follow-on actions would take about 8 work-hours and require parts costing $7,250 (for all four titanium horizontal stabilizer attachment brackets), for a cost of $7,930 per product, or parts costing $9,557 (for all four aluminum horizontal stabilizer attachment brackets), for a cost of $10,237. We have no way of determining the number of products that may need these actions.

Authority for This Rulemaking

Title 49 of the United States Code specifies the FAA's authority to issue rules on aviation safety. Subtitle I, section 106, describes the authority of the FAA Administrator. ''Subtitle VII: Aviation Programs,'' describes in more detail the scope of the Agency's authority.

We are issuing this rulemaking under the authority described in ''Subtitle VII, Part A, Subpart III, section 44701: General requirements.'' Under that section, Congress charges the FAA with promoting safe flight of civil aircraft in air commerce by prescribing regulations for practices, methods, and procedures the Administrator finds necessary for safety in air commerce. This regulation is within the scope of that authority

because it addresses an unsafe condition that is likely to exist or develop on products identified in this rulemaking action.

Regulatory Findings

We determined that this proposed AD would not have federalism implications under Executive Order 13132. This proposed AD would not have a substantial direct effect on the States, on the relationship between the national Government and the States, or on the distribution of power and responsibilities among the various levels of government.

For the reasons discussed above, I certify this proposed regulation:

(1) Is not a ''significant regulatory action'' under Executive Order 12866,

(2) Is not a ''significant rule'' under the DOT Regulatory Policies and Procedures (44 FR 11034, February 26, 1979),

(3) Will not affect intrastate aviation in Alaska, and

(4) Will not have a significant economic impact, positive or negative, on a substantial number of small entities under the criteria of the Regulatory Flexibility Act.

List of Subjects in 14 CFR Part 39

Air transportation, Aircraft, Aviation safety, Incorporation by reference, Safety.

The Proposed Amendment

Accordingly, under the authority delegated to me by the Administrator, the FAA proposes to amend 14 CFR part 39 as follows:

PART 39—AIRWORTHINESS DIRECTIVES

■ 1. The authority citation for part 39 continues to read as follows:

Authority: 49 U.S.C. 106(g), 40113, 44701.

§ 39.13 [Amended]

■ 2. The FAA amends § 39.13 by adding the following new AD:

Slingsby Aviation Ltd.: Docket No. FAA–2013–0997; Directorate Identifier 2013–CE–044–AD.

(a) Comments Due Date

We must receive comments by January 6, 2014.

(b) Affected ADs

None.

(c) Applicability

This AD applies to Slingsby Aviation Ltd. Model T67M260 airplanes, all serial numbers, certificated in any category.

(d) Subject

Air Transport Association of America (ATA) Code 55: Stabilizers.

(e) Reason

This AD was prompted by mandatory continuing airworthiness information (MCAI) originated by an aviation authority of another country to identify and correct an unsafe condition on an aviation product. The MCAI describes the unsafe condition as cracked horizontal stabilizer attachment brackets. We are issuing this AD to prevent separation of the horizontal stabilizer, which could result in loss of control.

(f) Actions and Compliance

Unless already done, do the actions specified in paragraphs (f)(1) through (f)(4) of this AD:

(1) Within the next 150 hours time-in-service (TIS) after the effective date of this AD or at the next annual inspection after the effective date of this AD, whichever occurs later, and repetitively thereafter at intervals not to exceed 150 hours TIS, inspect the aluminum horizontal stabilizer attachment brackets for cracks. Do the inspections following the ACTION instructions in Slingsby Advanced Composites Ltd. Service Bulletin S.B. No: 179, Issue 4, dated March 15, 2007.

(2) If, during any inspection required in paragraph (f)(1) of this AD, any cracks are found, before further flight, replace the cracked bracket with a serviceable part. Do the replacement following the ACTION instructions in Slingsby Advanced Composites Ltd. Service Bulletin S.B. No: 179, Issue 4, dated March 15, 2007. If a serviceable aluminum horizontal stabilizer attachment bracket is used as a replacement part, repetitively inspect as specified in paragraph (f)(1) of this AD.

(3) To terminate the repetitive inspections required in paragraph (f)(1) of this AD, all four aluminum horizontal stabilizer attachment brackets must be replaced with titanium horizontal stabilizer attachment brackets.

(4) After installing titanium horizontal stabilizer attachment brackets, installing aluminum horizontal stabilizer attachment brackets are prohibited.

(g) Other FAA AD Provisions

The following provisions also apply to this AD:

(1) *Alternative Methods of Compliance (AMOCs):* The Manager, Standards Office, FAA, has the authority to approve AMOCs for this AD, if requested using the procedures found in 14 CFR 39.19. Send information to ATTN: Mike Kiesov, Aerospace Engineer, FAA, Small Airplane Directorate, 901 Locust, Room 301, Kansas City, Missouri 64106; telephone: (816) 329–4144; fax: (816) 329–4090; email: *mike.kiesov@faa.gov*. Before using any approved AMOC on any airplane to which the AMOC applies, notify your appropriate principal inspector (PI) in the FAA Flight Standards District Office (FSDO), or lacking a PI, your local FSDO.

(2) *Airworthy Product:* For any requirement in this AD to obtain corrective actions from a manufacturer or other source, use these actions if they are FAA-approved. Corrective actions are considered FAA-approved if they are approved by the State of Design Authority (or their delegated agent). You are required to assure the product is airworthy before it is returned to service.

(3) *Reporting Requirements:* For any reporting requirement in this AD, a federal agency may not conduct or sponsor, and a person is not required to respond to, nor shall a person be subject to a penalty for failure to comply with a collection of information subject to the requirements of the Paperwork Reduction Act unless that collection of information displays a current valid OMB Control Number. The OMB Control Number for this information collection is 2120–0056. Public reporting for this collection of information is estimated to be approximately 5 minutes per response, including the time for reviewing instructions, completing and reviewing the collection of information. All responses to this collection of information are mandatory. Comments concerning the accuracy of this burden and suggestions for reducing the burden should be directed to the FAA at: 800 Independence Ave. SW., Washington, DC 20591, Attn: Information Collection Clearance Officer, AES–200.

(h) Related Information

Refer to European Aviation Safety Agency (EASA) AD No. 2012–0169, dated August 31, 2012, for related information. You may examine the MCAI on the Internet at *http://www.regulations.gov* by searching for and locating it in Docket No. FAA–2013–0997. For service information related to this AD, contact Slingsby Advanced Composites, Ings Lane, Kirbymoorside, York, YO62 6EZ, United Kingdom, telephone: +44 (0) 1751 432474; fax +44 (0) 1751 433016, Internet: *www.marshall-slingsby.com*. You may review this referenced service information at the FAA, Small Airplane Directorate, 901 Locust, Kansas City, Missouri 64106. For information on the availability of this material at the FAA, call (816) 329–4148.

Issued in Kansas City, Missouri, on November 15, 2013.

Earl Lawrence,

Manager, Small Airplane Directorate, Aircraft Certification Service.

[FR Doc. 2013–27919 Filed 11–20–13; 8:45 am]

BILLING CODE 4910–13–P

DEPARTMENT OF TRANSPORTATION

Federal Aviation Administration

14 CFR Part 71

[Docket No. FAA–2013–0921; Airspace Docket No. 13–AAL–4]

Proposed Modification of Class E Airspace; Sitka, AK

AGENCY: Federal Aviation Administration (FAA), Department of Transportation (DOT).

ACTION: Notice of proposed rulemaking (NPRM).

SUMMARY: This action proposes to modify Class E airspace at Sitka, AK, to

accommodate aircraft departing and arriving under Instrument Flight Rules (IFR) at Sitka Rocky Gutierrez Airport. The FAA is proposing this action to enhance the safety and management of aircraft operations at the airport.

DATES: Comments must be received on or before January 6, 2014.

ADDRESSES: Send comments on this proposal to the U.S. Department of Transportation, Docket Operations, M–30, West Building Ground Floor, Room W12–140, 1200 New Jersey Avenue SE., Washington, DC 20590; telephone (202) 366–9826. You must identify FAA Docket No. FAA–2013–0921; Airspace Docket No. 13–AAL–4, at the beginning of your comments. You may also submit comments through the Internet at *http://www.regulations.gov.*

FOR FURTHER INFORMATION CONTACT: Richard Roberts, Federal Aviation Administration, Operations Support Group, Western Service Center, 1601 Lind Avenue SW., Renton, WA 98057; telephone (425) 203–4517.

SUPPLEMENTARY INFORMATION:

Comments Invited

Interested parties are invited to participate in this proposed rulemaking by submitting such written data, views, or arguments, as they may desire. Comments that provide the factual basis supporting the views and suggestions presented are particularly helpful in developing reasoned regulatory decisions on the proposal. Comments are specifically invited on the overall regulatory, aeronautical, economic, environmental, and energy-related aspects of the proposal.

Communications should identify both docket numbers (FAA Docket No. FAA–2013–0921 and Airspace Docket No. 13–AAL–4) and be submitted in triplicate to the Docket Management System (see **ADDRESSES** section for address and phone number). You may also submit comments through the Internet at *http://www.regulations.gov.*

Commenters wishing the FAA to acknowledge receipt of their comments on this action must submit with those comments a self-addressed stamped postcard on which the following statement is made: ''Comments to FAA Docket No. FAA–2013–0921 and Airspace Docket No. 13–AAL–4''. The postcard will be date/time stamped and returned to the commenter.

All communications received on or before the specified closing date for comments will be considered before taking action on the proposed rule. The proposal contained in this action may be changed in light of comments received. All comments submitted will be available for examination in the public docket both before and after the closing date for comments. A report summarizing each substantive public contact with FAA personnel concerned with this rulemaking will be filed in the docket.

Availability of NPRM's

An electronic copy of this document may be downloaded through the Internet at *http://www.regulations.gov.* Recently published rulemaking documents can also be accessed through the FAA's Web page at *http://www.faa.gov/airports_airtraffic/air_traffic/publications/airspace_amendments/.*

You may review the public docket containing the proposal, any comments received, and any final disposition in person in the Dockets Office (see the **ADDRESSES** section for the address and phone number) between 9:00 a.m. and 5:00 p.m., Monday through Friday, except federal holidays. An informal docket may also be examined during normal business hours at the Northwest Mountain Regional Office of the Federal Aviation Administration, Air Traffic Organization, Western Service Center, Operations Support Group, 1601 Lind Avenue SW., Renton, WA 98057.

Persons interested in being placed on a mailing list for future NPRM's should contact the FAA's Office of Rulemaking, (202) 267–9677, for a copy of Advisory Circular No. 11–2A, Notice of Proposed Rulemaking Distribution System, which describes the application procedure.

The Proposal

The FAA is proposing an amendment to Title 14 Code of Federal Regulations (14 CFR) Part 71 by modifying Class E surface area airspace and Class E airspace extending upward from 700 feet above the surface at Sitka Rocky Gutierrez, AK. After review of the airspace, the FAAs Western Terminal Products Office found modification of the airspace necessary for the safety and management of aircraft departing and arriving under IFR operations at the airport. The segment of Class E surface area airspace southwest of the 4.1-mile radius of the airport would be modified to 10 miles southwest of the airport. The segment of Class E airspace extending upward from 700 feet above the surface southwest of the 6.6-mile radius of the airport would be modified to 14 miles southwest of the airport, and the segment northwest of the 6.6-mile radius of the airport would be modified to 29 miles northwest of the airport. The segments of controlled airspace west and southwest of the airport would be removed as they are no longer required for aircraft arriving and departing under IFR operations. This would enhance the safety and management of aircraft operations at the airport.

Class E airspace designations are published in paragraphs 6002 and 6005, respectively, of FAA Order 7400.9X, dated August 7, 2013, and effective September 15, 2013, which is incorporated by reference in 14 CFR 71.1. The Class E airspace designation listed in this document will be published subsequently in this Order.

The FAA has determined this proposed regulation only involves an established body of technical regulations for which frequent and routine amendments are necessary to keep them operationally current. Therefore, this proposed regulation; (1) Is not a ''significant regulatory action'' under Executive Order 12866; (2) is not a ''significant rule'' under DOT Regulatory Policies and Procedures (44 FR 11034; February 26, 1979); and (3) does not warrant preparation of a regulatory evaluation as the anticipated impact is so minimal. Since this is a routine matter that will only affect air traffic procedures and air navigation, it is certified this proposed rule, when promulgated, would not have a significant economic impact on a substantial number of small entities under the criteria of the Regulatory Flexibility Act.

The FAA's authority to issue rules regarding aviation safety is found in Title 49 of the U.S. Code. Subtitle 1, Section 106, describes the authority for the FAA Administrator. Subtitle VII, Aviation Programs, describes in more detail the scope of the agency's authority. This rulemaking is promulgated under the authority described in Subtitle VII, Part A, Subpart I, Section 40103. Under that section, the FAA is charged with prescribing regulations to assign the use of the airspace necessary to ensure the safety of aircraft and the efficient use of airspace. This proposed regulation is within the scope of that authority as it would modify controlled airspace at Sitka Rocky Gutierrez Airport, Sitka, AK.

This proposal will be subject to an environmental analysis in accordance with FAA Order 1050.1E, ''Environmental Impacts: Policies and Procedures'' prior to any FAA final regulatory action.

List of Subjects in 14 CFR Part 71

Airspace, Incorporation by reference, Navigation (air).

The Proposed Amendment

Accordingly, pursuant to the authority delegated to me, the Federal Aviation Administration proposes to amend 14 CFR part 71 as follows:

PART 71—DESIGNATION OF CLASS A, B, C, D AND E AIRSPACE AREAS; AIR TRAFFIC SERVICE ROUTES; AND REPORTING POINTS

■ 1. The authority citation for 14 CFR part 71 continues to read as follows:

Authority: 49 U.S.C. 106(g), 40103, 40113, 40120; E.O. 10854, 24 FR 9565, 3 CFR, 1959–1963 Comp., p. 389.

§ 71.1 [Amended]

■ 2. The incorporation by reference in 14 CFR 71.1 of the Federal Aviation Administration Order 7400.9X, Airspace Designations and Reporting Points, dated August 7, 2013, and effective September 15, 2013 is amended as follows:

Paragraph 6002 Class E airspace Designated as Surface Areas.

* * * * *

AAL AK E2 Sitka, AK [Modified]

Sitka Rocky Gutierrez Airport, AK
(Lat. 57°02′50″ N., long. 135°21′42″ W.)

Within a 4.1 mile radius of Sitka Rocky Gutierrez Airport, and within 3.5 miles each side of the airport 209° radial extending from the 4.1-mile radius to 10.5 miles southwest of the airport, and within 3 miles each side of the airport 313° radial extending from the 4.1-mile radius to 11.1 miles northwest of the airport. This Class E airspace is effective during the dates and times established in advance by a Notice to Airmen. The effective date and time will thereafter be continuously published in the Airport/Facility Directory, Alaska Supplement.

Paragraph 6005 Class E airspace areas extending upward from 700 feet or more above the surface of the earth.

* * * * *

AAL AK E5 Sitka, AK [Modified]

Sitka Rocky Gutierrez Airport, AK
(Lat. 57°02′50″ N., long. 135°21′42″ W.)

That airspace extending upward from 700 feet above the surface within a 6.6-mile radius of Sitka Rocky Gutierrez Airport, and within 4 miles each side of the airport 209° radial extending from the 6.6-mile radius to 14.5 miles south of the airport, and within 4 miles east and 8 miles west of the airport 313° radial extending from the 6.6-mile radius to 29 miles northwest of the airport; and that airspace extending upward from 1,200 feet above the surface within a 40-mile radius of lat. 56°51′34″ N., long. 135°33′05″ W.; and that airspace extending upward from 5,500 feet MSL within an 85-mile radius of lat. 56°51′34″ N., long. 135°33′05″ W.; excluding that airspace that extends beyond 12 miles from the coast.

Issued in Seattle, Washington, on November 13, 2013.

Clark Desing,

Manager, Operations Support Group, Western Service Center.

[FR Doc. 2013–27858 Filed 11–20–13; 8:45 am]

BILLING CODE 4910–13–P

DEPARTMENT OF TRANSPORTATION

Federal Aviation Administration

14 CFR Chapter I

[Docket No. FAA–2013–0988]

Policy and Procedures Concerning the Use of Airport Revenue; Proceeds From Taxes on Aviation Fuel

AGENCY: Federal Aviation Administration (FAA), DOT.

ACTION: Notice of Proposed Clarification of Policy; Request for Comments.

SUMMARY: This action proposes to amend the Federal Aviation Administration (''FAA'') Policy and Procedures Concerning the Use of Airport Revenue published in the **Federal Register** on February 16, 1999 (''Revenue Use Policy'') to clarify FAA's policy on Federal requirements for the use of proceeds from taxes on aviation fuel. Under Federal law, airport operators that have accepted Federal assistance generally may use airport revenues only for airport-related purposes. The revenue use requirements apply to certain state and local government taxes on aviation fuel as well as to revenues received directly by an airport operator. This notice publishes a proposed clarification of FAA's understanding of the Federal requirements for use of revenues derived from taxes on aviation fuel. Briefly, an airport operator or state government submitting an application under the Airport Improvement Program must provide assurance that revenues from state and local government taxes on aviation fuel are used for certain aviation-related purposes. These purposes include airport capital and operating costs, and state aviation programs. In view of the interests of sellers and consumers of aviation fuel, and of state and local government taxing authorities in limits on use of proceeds from taxes touching aviation fuel, this notice solicits public comment on the proposed policy clarification. This notice also solicits comments about whether there are other reasonable interpretations regarding local taxes that are not enumerated here and should be considered by the FAA. Finally, this proposed policy clarification, if finalized, would apply prospectively to use of proceeds from both new taxes and to existing taxes that do not qualify for grandfathering from revenue use requirements.

DATES: Comments must be received by January 21, 2014. Comments that are received after that date will be considered only to the extent possible.

ADDRESSES: To read background documents or comments received, go to *http://www.regulations.gov* at any time or to Room W12–140 on the ground floor of the DOT West Building, 1200 New Jersey Avenue SE., Washington, DC, between 9 a.m. and 5 p.m., Monday through Friday, except Federal holidays.

You may also send written comments by any of the following methods.

- *Federal eRulemaking Portal:* Go to *http://www.regulations.gov* and follow the instructions for sending your comments electronically. Docket Number: FAA 2013–0988.
- *Mail:* Docket Management Facility, U.S. Department of Transportation, 1200 New Jersey Avenue SE., West Building Ground Floor, Room W12–140, Washington, DC 20590–0001.
- *Hand Delivery:* Deliver to mail address above between 9:00 a.m. and 5 p.m. EST, Monday through Friday, except Federal holidays.
- *Fax:* (202) 493–2251.

Identify all transmissions with ''Docket Number FAA 2013–0988'' at the beginning of the document.

FOR FURTHER INFORMATION CONTACT: Randall S. Fiertz, Director, Office of Airport Compliance and Management Analysis, Federal Aviation Administration, 800 Independence Avenue SW., Washington, DC 20591, telephone (202) 267–3085; facsimile (202) 267–5257.

SUPPLEMENTARY INFORMATION:

Authority for the Proposed Policy Clarification

This notice is published under the authority described in Subtitle VII, part B, chapter 471, section 47122, and the Federal Aviation Administration Authorization Act of 1994, section 112(a), Public Law 103–305, 49 U.S.C. 47107(l)(1) (Aug. 23, 1994).

Background

The Airport and Airway Improvement Act of 1982, now codified at 49 U.S.C. 47101 *et seq.* (AAIA), establishes the Airport Improvement Program (AIP) for awarding Federal grants to airports in the United States. The AAIA requires that an airport sponsor accepting a grant under the AIP give assurances that any revenues received by the airport will be used for the capital and operating

expenses of the airport, the local airport system, or other local facilities owned or operated by the airport owner or operator and directly and substantially related to air transportation. The purposes of the revenue use requirements are to prevent a ''hidden tax'' on air transportation, and to ensure that Federal airport grants are used to supplement funding for airport projects and are not simply used to substitute funds diverted to support local non-airport programs.

In the years following the 1982 enactment of the AAIA, there were several instances of new state taxes being imposed on the sale of aviation fuel at AIP-funded airports. The application of the AAIA revenue use requirements to these new taxes was not entirely clear.[1] In response, Congress adopted an amendment to the AAIA in 1987 to bring state and local taxes on aviation fuel within the scope of the airport revenue use requirements of the AAIA. The amendment also provided that revenues from a state fuel tax could be used for state aviation programs, in addition to the uses permitted for revenue received by the airport sponsor.

Specifically, 49 U.S.C. 47107(b), as amended in 1987, requires that recipients of airport grants under the Airport Improvement Program provide the FAA with written assurances on use of revenue that local taxes on aviation fuel (except taxes in effect on December 30, 1987) and the revenues generated by a public airport will be expended for the capital or operating costs of the airport; the local airport system; or other local facilities owned or operated by the airport owner or operator and directly and substantially related to the air transportation of passengers or property.

This revenue use limitation does not apply if a provision enacted not later than September 2, 1982, in a law controlling financing by the airport owner or operator, or a covenant or assurance in a debt obligation issued not later than September 2, 1982, by the owner or operator, provides that the revenues, including local taxes on aviation fuel at public airports, from any of the facilities of the owner or operator, including the airport, be used to support not only the airport but also the general debt obligations or other facilities of the owner or operator. The statute does not prevent the use of a State tax on aviation fuel to support a State aviation program or the use of airport revenue on or off the airport for a noise mitigation purpose.

However, the 1987 amendment itself was open to interpretation on the application of use requirements to different taxes on aviation fuel. The conference report on the 1987 amendment to the AAIA did not clearly resolve all of these issues. The report stated:

> The assurance requiring that local taxes on aviation fuel must be spent on the airport is intended to apply to local fuel taxes only, and not to other taxes imposed by local governments, or to state taxes. Similarly, this provision is not intended to modify subsequent provisions in the bill which clarify that a state may commit the proceeds from state aviation fuel taxes to state aviation agencies and that an airport may apply airport revenues for airport noise abatement on or off the airport.

(1987 U.S.C.C.A.N. vol. 5, pp. 2613–2614 (H.R. Rep. No. 100–123(II)); 2638–2639 (H.R. Rep. No. 100–484))

In 1996, Congress enacted 49 U.S.C. 47133 to extend substantially the of 49 U.S.C. 47107(b) identical requirements for use of airport revenue and state and local taxes on aviation fuel to all airports that have been the subject of Federal assistance, regardless of whether the airport is currently subject to an FAA grant agreement.

The conference report for the FAA Reauthorization Act of 1996, which added section 47133, noted that ''revenue diversion burdens interstate commerce even if the airport is no longer receiving grants,'' and that the new § 47133 would remove the ''perverse incentive'' for airports to refuse AIP grants in order to avoid Federal policies on use of airport revenue.

The FAA Reauthorization Act of 1994, Section 112(a), codified at section 47107(l) directed FAA to establish policies and procedures to assure the prompt and effective enforcement of illegal diversion of airport revenue. Accordingly, to implement Sections 47107(b) and 47133, FAA has issued a comprehensive Revenue Use Policy on the use of revenues received by an airport sponsor. The Revenue Use Policy, at Section II.b.2., includes state or local taxes on aviation fuel in the definition of airport revenue:

> 2. State or local taxes on aviation fuel (except taxes in effect on December 30, 1987) are considered to be airport revenue subject to the revenue-use requirement. However, revenues from state taxes on aviation fuel may be used to support state aviation programs or for noise mitigation purposes, on or off the airport.

On the subject of noise mitigation, section 47133(c) states: ''Rule of construction.—Nothing in this section may be construed to prevent the use of a state tax on aviation fuel to support a state aviation program or the use of airport revenue on or off the airport for a noise mitigation purpose.'' While the statute does not expressly state that aviation fuel tax proceeds can be used for noise mitigation, those proceeds could be used for any purpose for which an airport operator's revenue could be used, and that expressly includes noise mitigation.

Aviation Fuel

As background, aviation fuel includes two general categories of fuel used in aircraft: aviation gasoline, or ''avgas,'' used in reciprocating engines; and kerosene jet fuel used in turbine engines. The American Society for Testing and Materials (ASTM) has issued separate standards for aviation fuel: ASTM D910 and D6227 for avgas and ASTM D1655–13 and D6615–11a for civil jet fuel. Both avgas and jet fuel are high-quality petroleum products that are refined, delivered, and stored separately from other fuels, such as vehicle gasoline, which can be refined to lower standards. Since aviation fuel and other fuels are distinct products, it should not be difficult for state and local government to identify the tax revenues attributable solely to aviation fuels.

The Case for Clarification

The FAA believes that general clarification is needed of the Revenue Use Policy and agency interpretation of Sections 47107(b) and 47133 for reference by all state and local taxing authorities.

Prior FAA Opinions

The FAA has issued five opinions on particular state or local aviation taxes on aviation fuel since 1987:

In 1990, Senator Slade Gorton sought clarification on whether the State of Washington or a locality within the state could impose a sales tax on aviation fuel and use the proceeds for a non-aviation purpose. FAA concluded that if the State and its localities imposed a direct tax on aviation fuel and used it for non-

[1] Title 49 of the U.S.C., section 40116(e), permits states and political subdivisions to levy or collect certain taxes, including property taxes, net income taxes, franchise taxes, and sales or use taxes on the sale of goods or services. Title 49 U.S.C. 40116(b), states and political subdivisions may not levy or collect a tax on (1) an individual traveling in air commerce; (2) the transportation of an individual traveling in air commerce; (3) the sale of air transportation; or (4) the gross receipts from that air commerce or transportation. The FAA Authorization Act of 1994 Section 112(e), amended the Anti-Head Tax Act, 49 U.S.C. 40116(d)(2)(A) to prohibit State, political subdivision, or an authority acting for a State or political subdivision from collecting a new tax, fee, or charge which is imposed exclusively upon any business located at a commercial service airport or operating as a permittee of the airport, other than a tax, fee, or charge utilized for airport or aeronautical purposes.

aviation purposes, it would be contrary to revenue use restrictions under 49 U.S.C. 47107. The FAA advised that a local tax on aviation fuel after December 1987 can only be expended for the capital and operating costs of the airport. The FAA further advised that the state tax on aviation fuel could only be spent on the local airport system or a state aviation program or noise mitigation measures on or off the airport. The opinion explained that Congress, by expressly permitting specific uses of aviation fuel tax revenue, necessarily excluded other non-airport related uses.

In 1992, Senator Christopher Bond sought clarification on the limitations on the imposition of a use tax on aviation fuel. The FAA response acknowledged that states are permitted to impose a use tax on aviation fuel, but that the AAIA limits the use that a state may prescribe for taxes collected at Federally-funded airports. The FAA concluded that the collection of the proposed tax at Federally-funded airports in the state would be in conflict with Federal grant assurance requirements, because the state's tax statute provided for unlimited use of tax proceeds. The tax at issue in Missouri was a general sales tax, not a specific tax on aviation fuel.

In 2000, the Tennessee Legislature considered diverting funds designated for the Tennessee Transportation Equity Fund (Equity Fund) or allocating funds already in the Equity Fund to the state general fund. The proceeds in the Equity Fund came from a 4 1/2% tax on the sale of aviation fuel on Federally obligated airports. The FAA advised that such action would be contrary to Federal law. In addition, FAA explained that the State of Tennessee could not rely on the fact that its 1986 state aviation fuel tax was grandfathered to enact new measures to divert, directly or indirectly, revenue previously allocated to aviation use. The FAA further advised that passage of the legislation to permit general use of the proceeds from the aviation fuel tax would place in jeopardy continued Federal funding of airport and noise abatement projects at Federally-assisted airports throughout the State of Tennessee.

In 2009, the State of Nebraska had a statewide general sales tax upon retail sales of products and services, but at some point had exempted the sale of aircraft fuel from the sales tax. The Nebraska Legislature considered repealing that exemption and proposed to make the aircraft fuel tax proceeds payable to the state general fund. An opinion was sought on whether the proposed sales tax upon aircraft fuel would violate 49 U.S.C. 40116, 49 U.S.C. 47107, or other Federal statutes, rules, or regulations. The FAA advised that if the State Legislature imposed a sales tax on aviation fuel sold on an airport, the use of the proceeds from the tax to support non-aviation activities would be inconsistent with Federal law. Monies from such a tax would have to be spent to support either (1) the capital or operating costs of the airport, the local airport system, or other local facilities owned or operated by the airport owner or operator and directly and substantially related to the air transportation of passengers or property; or (2) a state aviation program. The FAA advised that the enactment of the legislation to permit general use of the proceeds from the aviation fuel tax could jeopardize continued Federal funding of airport and noise abatement projects at Federally-assisted airports throughout the State of Nebraska.

In 2010, a state senator from Hawaii wrote to the General Counsel of the United States Department of Transportation and FAA Chief Counsel requesting a legal opinion concerning a proposed broad state tax on petroleum products that would have applied to aviation fuel as well as to other fuels. The Hawaii Attorney General took the position that because the tax law did not use the term ''aviation fuel'' and was not limited to aviation fuel, the requirements of Sections 47107(b) and 47133 would not apply. The FAA, responding for both FAA and DOT General Counsel, disagreed, and concluded that the proposed tax would be invalid under Federal law unless the proceeds from the sale of aviation fuel were used consistently with the revenue use statutes, or unless aviation fuel was expressly exempted from the tax.

Interpretation of Sections 47107(b) and 47133

In each of FAA's five opinions since 1987, the agency interpreted the provisions of Sections 47107(b) and 47133 to apply to any state or local tax on aviation fuel, whether the tax was specifically targeted at aviation fuel or was a general sales tax on products that included aviation fuel without exemption. Also, FAA interpreted these statutes to make no distinction between taxes imposed by a local government or state government agency. The FAA continues to see this interpretation as the most reasonable construction of these statutes, in view of the letter and intent of the statutes. At the same time, the agency also understands that there can be alternate views of the interpretation of a facially ambiguous statute. The agency is also aware that any interpretation of this statute will have substantial practical consequences both for state and local government agencies and for industry consumers of aviation fuel.

Any question of statutory interpretation begins with looking at the plain language of the statute to discover its original intent. To discover a statute's original intent, courts first look to the words of the statute and apply their usual and ordinary meanings. ''[T]he meaning of a statute must, in the first instance, be sought in the language in which the act is framed, and if that is plain . . . the sole function of the courts is to enforce it according to its terms.'' *Caminetti* v. *U.S.,* 242 U.S. 470, 485 (1917). If the meaning is clear, the agency must ''give effect to the unambiguously expressed intent of Congress.'' *Barnhart* v. *Walton,* 535 U.S. 212, 217–218 (U.S. 2002), citing *Chevron* v. *Natural Resources Defense Council, Inc.,* 467 U.S. 837, 842–843 (1984). This principle is called 'the plain meaning rule.' The rule ''generally means when the language of the statute is clear and not unreasonable or illogical in its operation, the court may not go outside the statute to give it a different meaning.'' 2A Sutherland Statutory Construction section 46:1 (7th ed.) (Nov. 2012).

If after looking at the language of the statute the meaning of the statute remains unclear (e.g., the statute is silent or ambiguous), courts attempt to ascertain the intent of the legislature by looking at legislative history. 3A Sutherland Statutory Construction section 66:3 (7th ed.) (Nov. 2012). ''Where, as here, resolution of a question of Federal law turns on a statute and the intention of Congress, we look first to the statutory language and then to the legislative history if the statutory language is unclear.'' *Blum* v. *Stenson,* 465 U.S. 886, 896–897 (1984). When a Federal agency interprets a statute, the primary focus is to determine the intent of Congress. Where different interpretations are possible, a court must look to reasons for the enactment of the statute and the purposes to be gained by it and construe the statute in the manner which is consistent with the law's purpose. *Dole* v. *United Steelworkers of America,* 494 U.S. 26, 35 (1990). Where a statute ''is silent or ambiguous with respect to the specific issue,'' an agency's interpretation must be sustained if it is ''based on a permissible construction'' of the Act. Chevron, 476 U.S. at 843. The U.S. Supreme Court has ''long recognized that considerable weight should be accorded to an executive

department's construction of a statutory scheme it is entrusted to administer . . . .'' *Chevron* at 844. ''[T]he well-reasoned views of the agencies implementing a statute 'constitute a body of experience and informed judgment to which courts and litigants may properly resort for guidance.' '' *Bragdon* v. *Abbott,* 524 U.S. 624, 642 (1998), citing *Skidmore* v. *Swift & Co.,* 323 U.S. 134, 139–140 (1944).

While the plain language of these statutes is not precise and could be subject to alternate interpretations, FAA believes that there are compelling reasons for the agency's past reading of the statutes. Alternate interpretations, while possible, tend to be inconsistent with the basic purposes of the legislation, including the need to avoid ''hidden taxation,'' and may not adequately account for language in legislative history indicating intent for a broader reach of the revenue use requirements.

> Statutory construction, however, is a holistic endeavor. A provision that may seem ambiguous in isolation is often clarified by the remainder of the statutory scheme because the same terminology is used elsewhere in a context that makes its meaning clear . . . or because only one of the permissible meanings produces a substantive effect that is compatible with the rest of the law. *United Savings Association of Texas v. Timbers of Inwood Forest Associates, Ltd.,* 484 U.S. 365, 371 (1988).

Courts harmonize the various parts of a statute if possible, reconciling them in the manner that best carries out the overriding purpose of the legislation. 3B Sutherland Statutory Construction section 75:2 (7th ed.) (Nov. 2012).

Reasons for FAA's interpretation of Sections 47107(b) and 47133, and for the clarification of policy on use of aviation fuel tax proceeds proposed in this Notice, include:

Local taxes. The term ''local taxes'' is reasonably interpreted to include both local government and state government taxes. ''Local'' refers to the geographic locale where the tax is collected, not to local government. This interpretation is supported both by the statutory language and by legislative intent (see 1987 U.S.C.C.A.N. vol. 5, pp. 2613–2614 (H.R. Rep. No. 100–123(II)); 2638–2639 (H.R. Rep. No. 100–484)):

- The provisions permitting certain uses of a ''state tax'' in sections 47107(b)(3) and 47133(c) would be unnecessary and meaningless unless state taxes were included in the requirements of sections 47107(b)(1) and (2) and 47133(a), which refer only to ''local'' taxes.
- There is no apparent rationale for distinguishing between local government and state government taxes for accomplishing the purposes of the Federal airport revenue use requirements, i.e., the prohibition on airport revenue diversion and avoidance of hidden taxes on aviation. Under the statutory framework, state governments are allowed slightly broader use of proceeds from aviation fuel taxes—i.e., support of state aviation programs—but otherwise all state and local government taxes on aviation fuel are treated identically.
- Requiring aviation use of local government proceeds but not state proceeds from taxes on aviation fuel would substantially undermine the purpose and effect of Sections 47107(b) and 47133, and would be inconsistent with the congressional intent behind the 1987 amendment regarding taxation of aviation fuel.
- The AAIA uses the term ''political subdivisions of the state'' elsewhere in the statute where the intent is to refer to local government.

The FAA seeks comment on whether there are other reasonable interpretations regarding local taxes that are not enumerated here and should be considered by the FAA.

Taxes on aviation fuel. Given the basic purpose of the revenue use statutes, the term ''taxes on aviation fuel'' cannot reasonably be construed to mean only taxes specifically on aviation fuel, and not to include taxes on petroleum products generally or general sales taxes on all goods that touch on aviation fuel. It seems to us that the most reasonable test is whether payment of the tax is required for sale of aviation fuel, not what the tax is called or whether other products are also subject to the tax. For a number of reasons, FAA has to date interpreted sections 47107(b) and 47133 to apply to all taxes that touch the sale of aviation fuel, regardless of whether the taxes are specific or general. These reasons include:

- Limiting the application of sections 47107(b) and 47133 only to taxes specifically imposed solely on aviation fuel would substantially defeat the legislative purpose of these statutes. If revenues from taxes on aviation fuel could be used for any purpose simply because the tax also applied to other products, then state and local governments could easily structure taxes to circumvent the effect of sections 47107(b) and 47133.
- The amendment as originally adopted by Congress in 1987 referred to ''any local taxes on aviation fuel.'' The word ''any'' was removed in the 1994 recodification of the AAIA, but Congress made clear in adopting the recodification that changes in wording would not make any change in the meaning or construction of the statute. See Public Law 103–272, section 1 (July 5, 1994). In our view, ''any'' connotes broad applicability and without restriction.
- Legislation enacted in 1994 and 1996 adopted increasingly stringent requirements for use of airport revenue and added sanctions for violations of revenue use requirements, including civil penalty authority for violations of 47107(b) and 47133. This indicates congressional support for the most effective administration of the revenue use requirements, and argues against an interpretation that effectively leaves aviation fuel tax proceeds subject to potentially unlimited state taxation.

The FAA seeks comments on whether there are other reasonable interpretations of the phrase ''taxes on aviation fuel'' that are not enumerated here and should be considered by the FAA.

Other taxes. The conference report on the 1987 amendment to the AAIA states that:

The assurance requiring that local taxes on aviation fuel must be spent on the airport is intended to apply to local fuel taxes only, and not to other taxes imposed by local governments, or to state taxes. (1987 U.S.C.C.A.N. vol. 5, pp. 2613–2614 (H.R. Rep. No. 100–123(II)); 2638–2639 (H.R. Rep. No. 100–484))

While this could be read out of context to appear to exempt all state taxes, including taxes on aviation fuel, from the statute, the report states in the next sentence that:

> * * * a state may commit the proceeds from state aviation fuel taxes to state aviation agencies * * * (H.R. Rep. No. 100–4844, p. 2638–2639)

Because this second sentence expressly refers to a permitted but still limited use of state aviation fuel tax revenues, it is clear that Congress intended for the statute to apply to such revenues. In our view, the reasonable reading of both provisions together is to take the term ''other taxes imposed by local governments, or to state taxes'' to mean taxes collected from sale of products other than aviation fuel. In other words, simply because a general tax collects revenues from sales of both aviation fuel and other products, the total revenues from the tax are not considered airport revenue. Only the tax collections from the sale of aviation fuel are subject to the statutory revenue use requirements. ''Other taxes'' means tax revenues collected from sale of products other than aviation fuel.

Grandfathered taxes. Sections 47107(b) and 47133 both contain a

''grandfather'' exception for taxes in effect on December 30, 1987. By itself the term ''in effect'' could mean enacted but not imposed, or enacted *and* actually being collected. The conference report to the Federal Aviation Reauthorization Act of 1996 clarifies congressional intent toward the scope of this exception:

> The conferees want to clarify that if a local fuel tax was enacted or adopted before December 30, 1987, but for which collections were not made until some significant period of time after December 30, 1987, it shall not be grandfathered pursuant to this section and all proceeds of such a tax must be used for the capital or operating costs of the airport, the local airport system, or pursuant to paragraph (3) of subsection (a).

Accordingly, the fact that an ordinance permitting taxes on aviation fuel existed in 1987 is not sufficient to exempt the tax from the revenue use requirements. A tax ordinance is grandfathered only if collection of the tax revenues on the sale of aviation fuel was initiated before December 30, 1987 or within a relatively short period after that date. If tax collections begin later, then the proceeds must be used for the purposes in sections 47107(b) and 47133.

Compliance

Airport sponsors. An airport sponsor applying for an AIP grant agrees to comply with a number of standard grant assurances, which are published on FAA's Airports Web site. See *http://www.faa.gov/airports/aip/grant_assurances/.* Grant Assurance no. 25, *Airport Revenues,* incorporates the provisions of 49 U.S.C. 47107(b) in each AIP grant agreement. So, executing a grant application involves assuring FAA that fuel taxes collected on aviation fuel will only be used for certain aviation purposes. Neither section 47107(b) nor section 47133 limits this requirement to taxes imposed by the airport sponsor; the assurance applies to any state or local government tax on aviation fuel. As FAA noted in a 2009 letter to the Hall County Airport Authority, Nebraska, regarding proposed state legislation to tax aviation fuel:

> * * * enactment of the [state] legislation to permit general use of the proceeds from the aviation fuel tax could jeopardize continued federal funding of airport and noise abatement projects at Federally-assisted airports throughout the [state].

Non-sponsor state and local governments. Title 49 U.S.C. 47133 contains a prohibition on use of aviation fuel tax proceeds for general purposes. This is a direct and self-implementing statutory requirement, and does not rely on contract terms, as does section 47107(b). Congress has provided two means for Federal enforcement of the terms of section 47133: Civil penalty authority in 49 U.S.C. 46301(a), and application to U.S. district court for judicial enforcement pursuant to 49 U.S.C. 47111(f).

Prospective application. In determining that a clarification of agency policy on use of aviation fuel tax proceeds is warranted, FAA is mindful that entities affected by this policy may not have fully understood the scope of Federal requirements in the past. Accordingly, it is FAA's intention to apply any final clarification of policy adopted in this proceeding prospectively, and to allow affected parties a reasonable time to bring state and local government taxes into compliance.

Request for comments. The clarification of policy proposed in this notice is intended to clarify FAA's interpretation of statutory requirements for use of airport revenue. In view of the potential interests of aircraft operators, aviation service providers, the aviation fuel industry, state and local taxing authorities and others in the Federal requirements applicable to aviation fuel taxes, this notice requests public comment on the proposed policy clarification.

Clarification of the Revenue Use Policy on Use of Proceeds From Taxes on Aviation Fuel

In consideration of the foregoing, FAA proposes to amend the Policy and Procedures Concerning the Use of Airport Revenue, published in the **Federal Register** at 64 FR 7696 on February 16, 1999, as follows:

1. Section II, Definitions, paragraph B.2, is revised to read:

> State or local taxes on aviation fuel (except taxes in effect on December 30, 1987) are considered to be airport revenue subject to the revenue-use requirement. However, revenues from state taxes on aviation fuel may be used to support state aviation programs, and as airport revenue can be used for noise mitigation purposes, on or off the airport.

2. In Section IV, Statutory Requirements for the Use of Airport Revenue, renumber paragraphs D and E as paragraphs E and F, and add a new paragraph D to read as follows:

> *D. Use of Proceeds From Taxes on Aviation Fuel.*
>
> 1. Federal law limits use of the proceeds from a state or local government tax on aviation fuel to the purposes permitted in those sections, as described in IV.A. of this Policy. Proceeds from tax on aviation fuel may be used for any purpose for which other airport revenues may be used, and may also be used for a state aviation program.
>
> 2. Airport sponsors that are subject to an AIP grant agreement have agreed, as a condition of receiving a grant, that the proceeds from a state or local government tax on aviation fuel will be used only for the purposes listed in paragraph 1. This commitment is not limited to taxes on aviation fuel imposed by the airport operator, and includes taxes on aviation fuel imposed by state government and other local jurisdictions.
>
> 3. The Federal limits on use of aviation fuel tax proceeds apply at an airport that is the subject of Federal assistance (as defined in Section II.b.2 of this Policy), whether or not the airport is currently subject to the terms of an AIP grant agreement, and regardless of the state or local jurisdiction imposing the tax.
>
> 4. The limits on use of aviation fuel tax revenues established by section 47107(b) and section 47133:
>
> a. Apply to a tax imposed by either a state government or a local government taxing authority;
>
> b. Apply to any tax on aviation fuel, whether the tax is imposed only on aviation fuel or is imposed on other products as well as aviation fuel. However, the limits on use of revenues apply only to the amounts of tax collected specifically for the sale, purchase or storage of aviation fuel, and not to the amounts collected for transactions involving products other than aviation fuel under the same general tax law;
>
> c. apply to taxes on all aviation fuel dispensed at an airport, regardless of where the taxes on the sale of fuel at the airport are collected; and
>
> d. apply to a new assessment or imposition of a tax on aviation fuel, even if the tax could have been imposed earlier under a statute enacted before December 30, 1987.

Issued in Washington, DC on November 14, 2013.

Randall S. Fiertz,

Director, Office of Airport Compliance and Management Analysis.

[FR Doc. 2013–27860 Filed 11–19–13; 11:15 am]

BILLING CODE 4910–13–P

CONSUMER PRODUCT SAFETY COMMISSION

16 CFR Part 1115

[CPSC Docket No. CPSC–2013–0040]

Voluntary Remedial Actions and Guidelines for Voluntary Recall Notices

AGENCY: Consumer Product Safety Commission.

ACTION: Notice of proposed rulemaking.

SUMMARY: In this document, the Consumer Product Safety Commission (Commission, CPSC, or we) proposes an interpretive rule to set forth principles and guidelines for the content and form of voluntary recall notices that firms provide as part of corrective action

plans under Section 15 of the Consumer Product Safety Act (CPSA). The Commission has issued regulations interpreting the requirements of section 15 of the CPSA. The existing regulations provide for notice to the public of the corrective action that a firm agrees to undertake. The regulations, however, do not provide any guidance regarding the information that should be included in a recall notice issued as part of a corrective action plan agreement. The proposed rule would set forth the Commission's expectations for voluntary remedial actions and recall notices, bearing in mind that certain elements of product recalls vary and each notice should be tailored appropriately. The proposed rule also would provide that, when appropriate, a corrective action plan negotiated under our regulations may include compliance program-related requirements.

DATES: Submit comments by February 4, 2014.

ADDRESSES: Comments, identified by Docket No. CPSC–2013–0040, may be submitted electronically or in writing:

Electronic Submissions: Submit electronic comments to the Federal eRulemaking Portal at: *http://www.regulations.gov*. Follow the instructions for submitting comments. The Commission is no longer directly accepting comments submitted by electronic mail (email), except through *www.regulations.gov*. The Commission encourages you to submit electronic comments by using the Federal eRulemaking Portal, as described above.

Written Submissions: Submit written submissions in the following way: Mail/Hand delivery/Courier (for paper, disk, or CD–ROM submissions), preferably in five copies, to: Office of the Secretary, Consumer Product Safety Commission, Room 820, 4330 East-West Highway, Bethesda, MD 20814; telephone (301) 504–7923.

Instructions: All submissions received must include the agency name and docket number for this rulemaking. All comments received may be posted without change, including any personal identifiers, contact information, or other personal information provided, to *http://www.regulations.gov*. Do not submit confidential business information, trade secret information, or other sensitive or protected information that you do not want to be available to the public. If furnished at all, such information should be submitted in writing.

Docket: For access to the docket to read background documents or comments received, go to: *http://www.regulations.gov*, and insert the docket number, CPSC 2013–0040, into the ''Search'' box, and follow the prompts.

FOR FURTHER INFORMATION CONTACT: Howard Tarnoff, Project Manager, Office of Compliance and Field Operations, U.S. Consumer Product Safety Commission, 4330 East-West Highway, Bethesda, MD 20814; email: *htarnoff@cpsc.gov*.

SUPPLEMENTARY INFORMATION:

I. Background

The Consumer Product Safety Improvement Act of 2008, Public Law 110–314, 122 Stat. 3016 (2008) (CPSIA), amended the CPSA to strengthen the CPSC's authority to recall products and to notify the public effectively about the scope of a recall and available remedies.

Section 214 of the CPSIA required the Commission to establish guidelines and requirements for mandatory recall notices ordered by the Commission or by a United States District Court under the CPSA. Section 214 also required that a recall notice include certain specific information, unless the Commission determines otherwise. 15 U.S.C. 2064(i). This information includes, but is not limited to, descriptions of the product, hazard, injuries, deaths, actions being taken, and remedy; identification of the manufacturer and retailers; identification of relevant dates; and any other information the Commission deems appropriate.

Although Section 214 applies only to mandatory recalls, the House Committee considering the legislation explicitly expressed an expectation that similar information would be provided, as applicable and to the greatest extent possible, in the notices issued in voluntary recalls. H.R. Rep. No. 110–501 at 40 (2008) (House Report). The Commission agrees with this statement, and believes that whether a product hazard is addressed in the context of a mandatory recall or a voluntary recall, the need to inform and encourage affected consumers to act is similar.

As required by Section 214(c) of the CPSIA, the Commission promulgated a final rule setting forth requirements and guidelines for mandatory recall notices. 75 Fed. Reg. 3355 (Jan. 21, 2010). That rule does not address voluntary recall notices related to corrective action agreements with the Commission.

Although no mandatory recall notices have been announced since issuance of the mandatory recall notice rule in January 2010, the CPSC has worked cooperatively with regulated companies on more than 1,000 voluntary corrective action programs and the associated recall notices.

Commission regulations provide that ''the Commission will attempt to protect the public from substantial product hazards by seeking . . . voluntary remedies,'' including ''corrective action plans.'' 16 CFR 1115.20. The regulation states: ''[c]orrective actions shall include, as appropriate: . . . (xi) An agreement that the Commission may publicize the terms of the plan to the extent necessary to inform the public of the nature and extent of the alleged substantial product hazard and of the actions being undertaken to correct the alleged hazard presented.'' The corrective action plan regulations do not address the form or content of the notice issued by the Commission as a component of a corrective action plan.

II. Basis for Proposed Rule

The portion of the proposed rule regarding recall notices is based upon a recommendation from a House Report that voluntary recall notices should contain information similar to that required for mandatory recall notices (see H.R. Rep. No. 110–501 at 40 (2008)) and upon many years of Commission experience with recalls and recall effectiveness. The proposal also is based on related agency expertise and on the information contained in agency recall guidance materials, including the Recall Handbook (*http://www.cpsc.gov/PageFiles/106141/8002.pdf*) and the requirements and guidelines for mandatory recall notices (16 CFR part 1115, subpart C).

The Commission believes that an interpretive rule setting forth the Commission's principles and guidelines regarding the content of voluntary recall notices will result in: (1) Greater efficiencies during recall negotiations, (2) greater predictability for the regulated community in working with the agency to develop voluntary recall notice content, and (3) timelier issuance of recall announcements to the public.

In addition, the proposed rule reflects technological advances. The tools available to improve recall effectiveness through broader dissemination of important recall information have expanded significantly in recent years. The Commission believes that specific reference to these tools should be included in a voluntary recall notice rule. For example, firms and the Commission now have access to various social media resources, such as a blog, Twitter, YouTube, a widget, mobile phone application, and Flickr, which can be used to increase the number of consumers who respond to safety information.

Negotiated corrective actions give the Commission the opportunity to tailor remedies to a particular situation and the associated health and safety risks presented. The proposed rule would include language that would permit, in appropriate situations and at the Commission's discretion, the Commission to pursue compliance program requirements in the course of negotiating corrective action plans. The proposed rule contemplates that if appropriate, a corresponding reference to compliance program requirements may be included in the related voluntary recall notice. Inclusion of compliance program requirements as an element of voluntary corrective action plans would echo compliance program requirements incorporated as part of recent civil penalty settlement agreements.

III. Description of the Proposed Rule

In general, the proposed rule would establish a new subpart D, titled, ''Principles and Guidelines for Voluntary Recall Notices,'' in part 1115 of title 16 of the Code of Federal Regulations and would add a new paragraph to 16 CFR 1115.20.

1. Proposed § 1115.20(a)—Legally Binding

The Commission proposes to revise § 1115.20(a) to state that, once a firm voluntarily agrees to undertake a corrective action plan, the firm is legally bound to fulfill the terms of the agreement. The Commission has the authority to order mandatory recalls of products, and, as noted earlier, the CPSIA increased the Commission's ability to undertake mandatory recalls of defective or violative products. However, in the interests of the public and most importers, manufacturers, wholesalers, and retailers, almost all recalls overseen by the Commission are jointly conducted by firms and the Commission on a voluntary basis. Part of the process of a voluntary recall includes the Commission and the firm agreeing to a corrective action plan that details the steps the firm will take including, but not limited to, the type of remedy it will offer to the public. Currently, § 1115.20(a) defines a corrective action plan as ''a document, signed by a subject firm, which sets forth the remedial action which the firm will voluntarily undertake to protect the public, but which has no legally binding effect.'' The result is that the Commission is prohibited from enforcing the terms of a corrective action plan if a recalcitrant firm violates the terms of its corrective action plan. In addition, the Commission has encountered firms that have deliberately and unnecessarily delayed the timely implementation of the provisions of their correction action plans. Accordingly, proposed § 1115.20(a) would provide the Commission with the necessary tools to compel a noncompliant or dilatory firm to carry out the terms of its voluntarily agreed upon corrective action plan.

In addition, amended § 1115.20(a) would make clear to firms wishing to conduct a voluntary recall that the Commission's preferred remedies are refunds, repairs and replacements, and that firms wishing to use other remedies shall have the burden of demonstrating that those alternatives will be as effective as the preferred remedies.

2. Proposed § 1115.20(a)(1)(xiii)—Admissions

Amended § 1115.20(a)(1)(xiii) would provide the Commission with additional flexibility concerning admissions in corrective action plans. Eliminating the phrase, ''If desired by the subject firm,'' and revising the sentence to include the following language later in the sentence ''if agreed to by all parties'' facilitates an opportunity for the Commission to negotiate and agree to appropriate admissions in each particular corrective active plan.

3. Proposed § 1115.20(a)(5)—Compliant Remedies

Proposed § 1115.20(a)(5) would describe the Commission's intent that any remedial actions set forth in a corrective action plan be compliant with all applicable CPSC rules, regulations, standards, or bans. This revision is intended to make that expectation specific.

4. Proposed § 1115.20(a)(1)(xv) and § 1115.20(b)—Compliance Programs

Proposed § 1115.20(a)(1)(xv) would add compliance program-related requirements as possible components of a corrective action plan. Proposed § 1115.20(b) would provide examples of the types of circumstances that such compliance program-related requirements, in the Commission's discretion, may be proposed as appropriate elements of a voluntary corrective action plan. Such circumstances might include, but are not limited to: Multiple previous recalls and/or violations of CPSC requirements over a relatively short period of time; failure to timely report substantial product hazards on previous occasions; or evidence of insufficient or ineffectual procedures and controls for preventing the manufacturing, importation, and/or distribution of dangerously defective or violative products.

The proposed rule sets forth the types of enforcement actions in which the Commission may address violations of a voluntary compliance program agreement including, but not limited to: Seeking an injunction or specific performance as well as pursuing all applicable sanctions under the CPSA.

In addition, proposed § 1115.20(b) would provide examples of the types of provisions that may be included in a voluntary compliance program agreement including, but not limited to: Maintaining and enforcing a system of internal controls and procedures to ensure that a firm promptly, completely, and accurately reports required information about its products to the Commission; ensuring that information required to be disclosed by the firm to the Commission is recorded, processed, and reported, in accordance with applicable law; establishing an effective program to ensure the firm remains in compliance with safety statutes and regulations enforced by the Commission; providing firm employees with written standards and policies, compliance training, and the means to report compliance-related concerns confidentially; ensuring that prompt disclosure is made to the firm's management of any significant deficiencies or material weaknesses in the design or operation of such internal controls that are reasonably likely to affect adversely, in any material respect, the firm's ability to report to the Commission; providing the Commission with written documentation, upon request, of the firm's improvements, processes, and controls related to the firm's reporting procedures; or making available all information, materials, and personnel deemed necessary to the Commission to evaluate the firm's compliance with the terms of the agreement.

Current § 1115.20(b) regarding consent order agreements would be re-designated to § 1115.20(c).

5. Proposed § 1115.20(c)(1)(xii)—Admissions

Proposed § 1115.20(c)(1)(xii) would amend 16 CFR 1115.20(b)(1)(xii) to provide the Commission with additional flexibility concerning admissions in consent order agreements. Eliminating the phrase, ''If desired by the subject firm,'' and revising the sentence to include the following language later in the sentence ''if agreed to by all parties'' facilitates an opportunity for the Commission to negotiate and agree to appropriate admissions in each particular consent order agreement.''

6. Proposed § 1115.30—Purpose

Proposed § 1115.30 would describe the purpose for a new subpart D, ''Principles and Guidelines for Voluntary Recall Notices,'' which is to see that every voluntary recall notice helps consumers and other affected persons identify the product to which a recall notice pertains, understand the actual or potential hazards presented by the product, understand the remedies available to consumers concerning the product, and take appropriate action in response to the notice. The proposed rule would provide principles concerning the content and form of voluntary recall notices and guidelines concerning the expected content of all such recall notices, drafted by Commission staff and the recalling firm.

7. Proposed § 1115.31—Applicability

Proposed § 1115.31 would explain that the principles and guidelines in subpart D apply to manufacturers (including importers), retailers, and distributors of consumer products.

8. Proposed § 1115.32—Definitions

Proposed § 1115.32 would define certain terms used in subpart D. The proposed definitions in this section are based on the Commission's experience with recalls under section 15. This section would define ''electronic medium'' to encompass the various methods of communicating recall information electronically and would define ''voluntary recall notice'' as the means of notifying consumers and others of the voluntary remedial actions applicable to a consumer product. Additionally, proposed § 1115.32 would state that the definitions in section 3 of the CPSA (15 U.S.C. 2052) apply.

9. Proposed § 1115.33—Voluntary Recall Notice Principles

Proposed § 1115.33 would provide general principles and describe the Commission's policies pertaining to recall notices. The proposed principles are similar to the guidelines for mandatory recall notices codified at 16 CFR 1115.26, with certain exceptions. In general, proposed § 1115.33(a) would state principles that are important for recall notices to be effective. For example, proposed § 1115.33(a)(1) would state that a recall notice should provide information that enables consumers and other affected persons to identify the recalled product and take appropriate action.

Proposed § 1115.33(a)(2) through (a)(5) would state the purpose of a voluntary recall notice, provide guidance on the form of the voluntary recall notice, and set forth the principal forms of notice. Proposed § 1115.33(a)(2) is similar to 16 CFR 1115.26(a)(2), but would reference the Associated Press (AP) Stylebook as the guide for the language and format of voluntary recall notices. CPSC staff has used the AP Stylebook for decades to develop the template used for the drafting of recall press releases. Staff's experience is that most media outlets are familiar with or use the rules set forth in the AP Stylebook within their own media organization. Thus, media organizations are more likely to disseminate information contained in a press release that comports with the AP Stylebook.

Proposed § 1115.33(a)(5) is similar to 16 CFR 1115.26(a)(5) but specifically identifies the methods to be used to publicize a voluntary recall notice. These methods are clearly listed as a press release or recall alert, a prominently displayed in-store poster, and a Web site posting, as well as two additional forms of publication from the subsequent list of voluntary recall notice forms delineated in § 1115.33 (b)(1)(i)–(vi). In an effort to provide clarity regarding the types of methods a firm should use, this proposed change describes the five preferred categories of methods for disseminating the voluntary recall information to broad audiences.

Proposed § 1115.33(b)(1) is similar to 16 CFR 1115.26(b)(1) but would include ''electronic'' and ''electronic medium'' as general forms for a voluntary recall notice and would identify additional specific forms of, and means for, communicating a voluntary recall notice as acceptable, such as radio news release; video news release; b-roll package; YouTube; Instagram, or Vine video; and social media sites, such as Facebook, Google+, Twitter, Pinterest, Tumblr, Flickr, and blogs, as examples. Guidance from the Office of Management and Budget calls for agencies to format public communications for mobile platforms, such as smartphones, tablets, and similar devices. The reference to ''electronic'' and ''electronic medium'' forms of the press release is intended to promote the use of communications using digital and mobile platforms. In addition, this section seeks to reflect the common practice in recent years for CPSC staff to request that recalling firms use their own social media platforms to communicate directly with customers about voluntary recalls. This low-cost mechanism of informing customers is designed to enhance the likelihood that customers will learn about the recall and pursue the remedy offered and that these firms use video and other electronic media for this purpose.

Proposed § 1115.33(b)(2) is similar to 16 CFR 1115.26(b)(2) and would recognize that a direct recall notice is the most effective form of a recall notice. The proposed rule would state that when firms have contact information for consumers, or when contact information is reasonably obtainable, firms shall issue direct recall notices. Proposed § 1115.33(b)(2) includes ''electronic medium'' and ''hard copy'' as possible forms of direct voluntary recall notice.

Because firms often lack specific contact information, most recall notices are disseminated to broad audiences. In contrast, a direct recall notice is sent directly to specific, identifiable consumers of the recalled product. In most instances, these consumers are the purchasers of the recalled product. In other instances, the purchasers may have given the product to other consumers, as a gift, for example. In the latter case, if the purchaser received the recall notice, the purchaser will generally know to whom the purchaser gave the product and could contact the recipient about the recall notice. In either case, the persons exposed to the product and its hazard will be more likely to receive and respond to a direct recall notice than a broadly disseminated recall notice. The proposed rule reflects the Commission's expectation that firms will take reasonable steps to obtain direct customer contact information from third parties for purposes of issuing direct voluntary recall notices, rather than rely solely on information contained in the firm's own records.

Proposed § 1115.33(b)(3) is similar to 16 CFR 1115.26(b)(3) and would discuss Web site recall notices, stating that recall notices should be posted on the Web site's first entry point. The recall notices should be clear, prominent, and interactive, allowing consumers and others to obtain recall information and request a remedy.

Proposed § 1115.33(c) is similar to 16 CFR 1115.26(c) and would provide that the recall notice (including the press release, call center scripts, in-store posters and social media communications) should be in languages in addition to English, whenever appropriate, to adequately inform the public of a product recall. The proposed rule recognizes that a language in addition to English may be necessary to communicate information regarding defective or violative products when factors such as product labeling and marketing location indicate that a significant number of individuals who could potentially be affected by the recall do not speak or read English. The

proposed rule provides that the Commission's Spanish translation of a press release should be used on a recalling firm's Web site and other agreed-upon locations.

10. Proposed § 1115.34—Voluntary Recall Notice Content Guidelines

Proposed § 1115.34 is similar to 16 CFR 1115.27 and would set forth guidelines for the content of voluntary recall notices. The objectives of a recall include locating the recalled products, removing the recalled products from the distribution chain and from consumers, and communicating information to the public about the recalled product and the remedy offered to consumers. A voluntary recall notice should motivate firms and media to publicize the recall information widely, and the notice should motivate consumers to act on the recall for the sake of safety.

Proposed § 1115.34(a) would provide that a voluntary recall notice should include the word ''recall'' in the heading and text. For many years, the Commission staff's Recall Handbook has directed firms to use the term ''recall'' in the heading and text. The word ''recall'' draws media and consumer attention to the notice and to the information contained in the notice. In addition, use of the term ''recall'' draws attention to the notice more effectively than omitting the term or using an alternative term. A recall notice must be read to be effective. Drawing attention to the notice through the use of the word ''recall'' increases the likelihood that the notice will be read and will help effectuate the purposes of the CPSA and Consumer Product Safety Improvement Act.

Proposed § 1115.34(b) is similar to 16 CFR 1115.27(b) and would provide that the voluntary recall notice contain the date of the notice's release, issuance, posting, or publication.

Proposed § 1115.34(c) sets forth the content for voluntary recall notice headlines and does not correspond to any provision in 16 CFR 1115.27. A protocol for drafting voluntary recall notice headlines will support the Commission's efforts to achieve fairness, accuracy, and newsworthiness of recall press releases.

Overseas firms will sometimes engage an entity with U.S.-based operations to manage the logistics of a recall; that entity should be identified in the Remedy section of the voluntary recall notice as the entity to be contacted by the consumer to obtain the remedy. The headline should include the name of the U.S.-based entity responsible for effectuating the recall remedy for consumers, reflecting staff's goal of issuing a voluntary recall notice that will provide consumers with clear and consistent information regarding the manner in which to pursue the recall remedy.

In unique cases, it may be appropriate for the headline to identify the U.S.-based entity that is managing the logistics of the recall, as well as specify the name of the overseas manufacturer. In other unique cases, such as when the overseas manufacturer is directly handling all elements of the corrective action plan, it may be appropriate for the headline to identify only the overseas manufacturer of the recalled product. These cases are the exception and not the rule.

Proposed § 1115.34(d) is similar to 16 CFR 1115.27(c) and would provide that the voluntary recall notice should include a description of the product, including model name and number, SKU number, and the names of the product and other information needed to describe the product, such as the product's color, identifying tags, or labels. Proposed § 1115.34(d) also contains a paragraph describing the type and quality of photographs that should be provided by the recalling firm, if requested by the Commission, for the product photographs to comport with the established standards for the size of photographs on the CPSC's Web site.

Proposed § 1115.34(e) is similar to 16 CFR 1115.27(d) and would provide that the voluntary recall notice should contain a clear and concise statement of the actions that a firm is taking concerning the product so that consumers and others are aware of, and understand, the firm's actions and the options that will be available to the consumer to address the defective or violative product.

Proposed § 1115.34(f) is similar to 16 CFR 1115.27(e) and would provide that the voluntary recall notice should state the approximate number of units covered by the recall, including all product units manufactured, imported, and/or distributed in commerce. This information communicates to the consumer whether the product was widely produced and distributed or sold only in limited numbers.

Proposed § 1115.34(g) is similar to 16 CFR 1115.27(f) and would provide that the description of the alleged substantial product hazard should allow consumers to recognize the risks of potential injury or death associated with the product, the problem giving rise to the recall, and the type of hazard or risk at issue (*e.g.,* burn, laceration). Proposed § 1115.34(g)(1) and (g)(2) are similar to 16 CFR 1115.27(g)(1) and (g)(2) and would specify what the description should include. For example, the description should include the product defect, fault, failure, flaw, and/or problem giving rise to the recall. Proposed § 1115.34(g)(3) does not have a corresponding provision in 16 CFR 1115.27. This proposed section provides that the description of the alleged substantial product hazard should state that the hazard ''can'' occur in instances where there have been injuries and incidents associated with the product. Consistent with the AP Stylebook, the proposed rule states that the words ''could,'' ''may,'' or ''potential'' should not be used in the Hazard section of the release when there are documented incidents or injuries.

Proposed § 1115.34(h) is similar to 16 CFR 1115.27(g) and would state that the voluntary recall notice should identify the firm conducting the recall and also underscore the CPSA definition of the term ''manufacturer'' to include an importer.

Proposed § 1115.34(i) is similar to 16 CFR 1115.27(h) and addresses how the manufacturer should be identified (*e.g.,* legal name, location of headquarters, Web domain, or other reasonably accessible electronic medium).

Identifying ''significant retailers'' will help consumers determine whether the consumer might have the product. In the absence of a statutory definition, and based on experience with recalls, the Commission believes that a significant retailer can be determined on the basis of several factors, and proposed § 1115.34(j), which is similar to 16 CFR 1115.27(i), would describe those factors.

First, under proposed § 1115.34(j), a product's retailer is significant if the retailer was the exclusive retailer of the product. Identifying an exclusive retailer can help consumers determine whether they have the product, based on whether they have shopped at that retailer.

Second, a product's retailer is significant if the retailer was an importer of the product. As an importer, a retailer will typically have more information and greater access to information about a product than a retailer that was not an importer.

Third, a product's retailer is significant if the retailer is a nationwide or regionally located retailer with multiple locations. Retailers with multiple locations nationwide or regionally are likely to have sold more units of the product or may have sold the product to more consumers than retailers without such multiple physical locations. Therefore, nationwide and regional retailers are likely to be more

familiar to consumers than retailers that have only a limited physical presence.

Fourth, a retailer with a significant market presence, as measured by units sold or held for purposes of sale or distribution in commerce, also is a significant retailer. This category would include, for example, retailers who have a significant sales volume through Internet sales rather than sales at physical locations. A retailer that has sold, or held for purposes of sale or distribution, a significant number of the total manufactured, imported, or distributed units of the product, will have sold the product to, and affected, more consumers than a retailer who sold fewer units of the product.

Fifth, a product's retailer is significant, if identification of the retailer is in the public interest. Recalls and products vary from one to the next, and identifying certain retailers who do not otherwise satisfy the categories described above still may have public and consumer benefits. Deeming a retailer to be significant in the public interest reflects the flexibility needed to seek the best possible recall effectiveness under specific circumstances.

Proposed § 1115.34(k) is similar to 16 CFR 1115.27(j) and would provide that the voluntary recall notice should include a description of the region where the product was sold or held for purposes of sale or distribution in commerce to assist consumers in determining whether they have the product at issue.

Proposed § 1115.34(l) is similar to 16 CFR 1115.27(k) and would provide that the voluntary recall notice should state the month and year in which the manufacture of the product began and ended and the month and year in which the retail sales began and ended for each make and model of the product covered by the recall notice to assist consumers in determining whether they have the product at issue.

Proposed § 1115.34(m), which is similar to 16 CFR 1115.27(l), would provide that the voluntary recall notice should state the approximate price of the product or a price range. Price information will help consumers identify the product and inform them about refund remedies, as applicable.

Proposed § 1115.34(n), which is similar to 16 CFR 1115.27(m), addresses the description in the voluntary recall notice of all incidents, injuries, and deaths associated with the product conditions or circumstances giving rise to the recall. The notice should provide the ages and states of residence of persons killed. This section also provides for prompt conveyance to the Commission of information relating to any product-related fatality or a significant number of additional product-related incidents that a firm receives after the initial recall notice. In addition, this section provides that the information should be reflected promptly in an update to the notice on the firm's Web site and the Commission's Web site.

Proposed § 1115.34(o), which is similar to 16 CFR 1115.27(n), would provide that the voluntary recall notice should provide a description of each remedy available to the consumer, the actions required of the consumer to obtain each remedy, and any information needed by the consumer to obtain each remedy. As reflected in this section, potential remedies include, but are not limited to: forwarding the product to the manufacturer, returning the product to the retailer, or scheduling an in-home repair. Proposed § 1115.34(o) also provides that where the listing of model names and model and/or serial numbers of a recalled product is extensive, complicated, or not conducive to inclusion in the voluntary recall notice, the notice should refer customers to the recalling firm's Web site or call center.

This proposed section would also provide that any changes to the process or nature of the remedy contemplated by the firm after the issuance of the voluntary recall notice should be communicated immediately to the Commission and reflected in an agreed-upon update to the notice on the firm's Web site and the CPSC's Web site. Updated remedy information also should be transmitted to consumers in a manner consistent with the communication of the initial voluntary recall notice.

Proposed § 1115.34(p) reflects inclusion in a voluntary recall notice of information regarding compliance program-related actions agreed to by the recalling firm as a component of its corrective action plan. This section does not correspond to any provision in 16 CFR 1115.27.

Proposed § 1115.34(q) is similar to 16 CFR 1115.27(o) and provides that the voluntary recall notice should contain any other information that the Commission and the recalling firm deem appropriate.

11. Proposed § 1115.35—Multiple Products or Models

Proposed § 1115.35 is similar to 16 CFR 1115.28 and provides that the voluntary recall notice for each product or model covered by the recall notice comports with the guidelines set forth in this subpart.

IV. Administrative Procedure Act

The Administrative Procedure Act (APA) requires publication of a general notice of proposed rulemaking for most rules. 5 U.S.C. 553(b). However, this requirement does not apply to interpretive rules and general statements of policy. *Id.* 553(b)(A). This proposed rule would provide guidance about the content of voluntary recall notices, and amend 16 CFR 1115.20 of the Commission's existing interpretive rule regarding corrective action plans to provide that, where appropriate, a corrective action plan may include compliance program-related requirements. The proposed rule would not establish any mandatory requirements.

Because both corrective action plans and related voluntary recall notices require agency and firm consensus, notice and comment could provide valuable feedback to improve the efficacy and usefulness of the guidance to be contained in the rule. As proposed, the rule reflects agency experience and practice; and is intended to help address product hazards and promote the timely, accurate, and complete disclosure of information necessary to protect public health and safety. Additional information regarding stakeholder experience in framing and communicating corrective action plans and related voluntary recall notices could assist CPSC in refining related interpretive rule guidance, with a goal of protecting public health and safety.

Thus, although the APA does not require the Commission to begin this rulemaking with a notice of proposed rulemaking, the Commission is providing an opportunity for public comment.

V. Effective Date

The APA generally requires that the effective date of a rule be at least 30 days after publication of the final rule. *Id.* 553(d). However, an earlier effective date is permitted for interpretive rules and statements of policy. *Id.* Thus, this proposed rule is excepted from the APA effective date requirement. *Id.* 553(d)(2).

Because CPSC is giving notice and soliciting comment (even though notice and comment procedures are not required), the public and potentially affected firms will have significant advance notice of the agency's proposed guidance. Moreover, implementation of the rule will not result in the imposition of new, mandatory requirements. Stakeholders necessarily are involved in the negotiations that precede corrective action plans and associated recall notices, and they would benefit from the

additional information about agency policy and staff expectations to be contained in the rule when finalized. Therefore, the Commission proposes that the effective date be the date of publication of a final rule in the **Federal Register**.

VI. Regulatory Flexibility Act

Under section 603 of the Regulatory Flexibility Act (RFA), when the APA requires an agency to publish a general notice of proposed rulemaking, the agency must prepare an initial regulatory flexibility analysis assessing the economic impact of the proposed rule on small entities. 5 U.S.C. 603(a). As noted, the Commission is proposing an interpretive rule that would provide guidance concerning the content of voluntary recall notices and further would provide that, when appropriate, corrective action plans may include compliance program-related requirements. Although the Commission is choosing to issue the rule through notice and comment procedures, the APA does not require a proposed rule. Therefore, no initial regulatory flexibility analysis is required under the RFA. Moreover, the proposed rule would not establish any mandatory requirements and would not impose any obligations on small entities (or any other entity or party).

VII. Paperwork Reduction Act

The proposed rule would not impose any information collection requirements. It sets out proposed guidelines for the content of recall notices that are issued as part of corrective action agreements negotiated between Commission staff and firms. Accordingly, the rulemaking is not subject to the Paperwork Reduction Act, 44 U.S.C. sections 3501 through 3520.

VIII. Environmental Considerations

The Commission's regulations address whether we are required to prepare an environmental assessment or an environmental impact statement. These regulations provide a categorical exclusion for certain CPSC actions that normally have ''little or no potential for affecting the human environment.'' 16 CFR 1021.5(c)(1). This proposed rule falls within the categorical exclusion.

List of Subjects in 16 CFR Part 1115

Administrative practice and procedure, Business and industry, Consumer protection, Reporting and recordkeeping requirements.

Therefore, the Commission proposes to amend Title 16 of the Code of Federal Regulations as follows:

PART 1115—SUBSTANTIAL PRODUCT HAZARD REPORTS

■ 1. The authority for part 1115 continues to read as follows:

Authority: 15 U.S.C. 2061, 2064, 2065, 2066(a), 2068, 2069, 2070, 2071, 2073, 2076, 2079, and 2084.

■ 2. In § 1115.20 revise paragraphs (a) and (a)(1)(xiii); add paragraphs (a)(1)(xv) and (a)(5); redesignate paragraph (b) as paragraph (c) and add new paragraph (b); and revise newly redesignated paragraph (c)(1)(xii) to read as follows:

§ 1115.20 Voluntary remedial actions.

* * * * *

(a) *Corrective action plans.* A corrective action plan is a document, signed by a subject firm, which is legally binding and sets forth the remedial action which the firm will voluntarily undertake to protect the public. Refunds, repairs and replacements are preferred remedies. Firms that wish to use other remedies shall have the burden of demonstrating that those alternatives will be as effective as the preferred remedies. The Commission reserves the right to seek broader corrective action if it becomes aware of new facts or if the corrective action plan does not sufficiently protect the public.

(1) * * *

(xiii) The following statement or its equivalent, if agreed to by all parties: ''The submission of this corrective action plan does not constitute an admission by (the subject firm) that either reportable information or a substantial product hazard exists.''

* * * * *

(xv) Compliance program-related requirements.

* * * * *

(5) All remedial actions undertaken pursuant to a corrective action plan shall be compliant with all applicable CPSC rules, regulations, standards, or bans.

(b) *Voluntary compliance program agreements under section 15 of CPSA.* A voluntary compliance program agreement is a provision in a voluntary corrective action plan (or a separate agreement, as appropriate) executed by a subject firm and the Commission that incorporates a specific written plan for future steps to be taken by the firm to assure that it meets the requirements of the agency's laws and regulations. Violation of a voluntary compliance program agreement may result in a formal Commission enforcement action, including all applicable sanctions set forth in the Consumer Product Safety Act. A violation may also result in legal action by the Commission to enforce the terms of a compliance agreement such as seeking an injunction or specific performance, as appropriate.

(1) The Commission always retains broad discretion to seek a voluntary compliance program agreement. Under certain circumstances, it may be appropriate for the Commission to seek agreements with firms to implement a compliance program, including but not limited to, the following:

(i) Multiple previous recalls and/or violations of Commission requirements over a relatively short period of time;

(ii) Failure to timely report substantial product hazards on previous occasions; or

(iii) Evidence of insufficient or ineffectual procedures and controls for preventing the manufacturing, importation, and/or distribution of dangerously defective or violative products.

(2) The provisions in a voluntary compliance program agreement may vary depending on the nature and circumstances of a firm's behavior that led the Commission to determine that such an agreement is in the public interest. The following provisions, among others as appropriate, may be included in a written voluntary compliance program agreement:

(i) Maintain and enforce a system of internal controls and procedures to ensure that the firm promptly, completely, and accurately reports required information about its products to the Commission;

(ii) Ensure that information required to be disclosed by the firm to the Commission is recorded, processed, and reported, in accordance with applicable law;

(iii) Establish an effective program to ensure the firm remains in compliance with safety statutes and regulations enforced by the Commission;

(iv) Provide firm employees with written standards and policies, compliance training, and the means to report compliance-related concerns confidentially;

(v) Ensure that prompt disclosure is made to the firm's management of any significant deficiencies or material weaknesses in the design or operation of such internal controls that are reasonably likely to affect adversely, in any material respect, the firm's ability to report to the Commission;

(vi) Provide the Commission with written documentation, upon request, of the firm's improvements, processes, and controls related to the firm's reporting procedures; or

(vii) Make available all information, materials, and personnel deemed

necessary to the Commission to evaluate the firm's compliance with the terms of the agreement.

(c) *Consent order agreements under section 15 of CPSA.*

* * * * *

(1) * * *

(xii) The following statement or its equivalent, if agreed to by all parties: ''The signing of this consent order agreement does not constitute an admission by (the Consenting Party) that either reportable information or a substantial product hazard exists.''

■ 3. Add a new Subpart D to read as follows:

Subpart D—Voluntary Recall Notices

Secs.
1115.30 Purpose.
1115.31 Applicability.
1115.32 Definitions.
1115.33 Voluntary recall notice principles.
1115.34 Voluntary recall notice content guidelines.
1115.35 Multiple products or mode.

Subpart D—Voluntary Recall Notices

§ 1115.30 Purpose.

(a) This section sets forth the information that should be included in a voluntary recall notice and the manner in which the notice should be distributed.

(b) The Commission establishes these guidelines to help ensure that every voluntary recall notice effectively helps consumers and other persons to:

(1) Identify the specific product to which the voluntary recall notice pertains;

(2) Understand the product's actual or potential hazards to which the voluntary recall notice pertains and information relating to such hazards;

(3) Understand all remedies available to consumers concerning the product to which the voluntary recall notice pertains; and

(4) Take appropriate actions in response to the notice.

§ 1115.31 Applicability.

This subpart applies to manufacturers (including importers), retailers, and distributors of consumer products (as those terms are defined herein and in the Consumer Product Safety Act (CPSA)), and other products or substances that are regulated under the CPSA, or any other Act enforced by the Commission.

§ 1115.32 Definitions.

In addition to the definitions given in Section 3 of the CPSA (15 U.S.C. 2052), the following definitions apply:

(a) *Direct voluntary recall notice* means a voluntary recall notice that is communicated, sent, or transmitted directly to specifically identified consumers.

(b) *Electronic* means technology having electrical, digital, magnetic, wireless, optical, electromagnetic, voice-recording systems, or similar capabilities.

(c) *Electronic medium* means an electronic method of communication (including, but not limited to, Web site, electronic mail, telephonic system, text messaging, tweeting, magnetic disk, CD–ROM), pursuant to which the intended recipient can effectively access the information provided and as to which the firm can provide, upon request, evidence of delivery.

(d) *Firm* means a manufacturer (including importer), retailer, or distributor, as those terms are defined in the CPSA.

(e) *Voluntary recall notice* means a notification to consumers and others of the voluntary remedial action applicable to a consumer product or other products or substances that are regulated under the CPSA, or any other Act enforced by the Commission.

§ 1115.33 Voluntary recall notice principles.

(a) *General.* (1) A voluntary recall notice should provide sufficient information and motivation for consumers and other persons to identify the product and its actual or potential hazards, and to respond and take the stated action. A voluntary recall notice should clearly and concisely state the potential for injury or death.

(2) A voluntary recall notice should be written in language designed for, and readily understood by, the targeted consumers or other persons. The language should be simple and should avoid or minimize the use of highly technical or legal terminology. The language and formatting of a voluntary recall notice in the form of a press release should comport with the most current edition of the Associated Press Stylebook.

(3) A voluntary recall notice should be targeted and tailored to the specific product and circumstances. In determining the form and content of a voluntary recall notice, the manner in which the product was advertised and marketed should be considered.

(4) A direct voluntary recall notice is the most effective form of voluntary recall notice.

(5) Voluntary recall notices should be made using:

(i) A press release or Recall Alert;

(ii) A prominently displayed in-store poster;

(iii) A Web site posting; and

(iv) At least two additional methods of publication not included in (i) through (iii) above from the voluntary recall notice forms provided in Subsection (b) of this section.

(b) *Form of voluntary recall notice.* (1) *Possible forms.* A voluntary recall notice may be written, electronic, or in any other form agreed upon by the Commission and the firm. Voluntary recall notices may be transmitted using an electronic medium and in hard copy form. Acceptable forms of, and means for, communicating voluntary recall notices include, but are not limited to:

(i) Letter, Web site posting, electronic mail, RSS feed, or text message;

(ii) Press release or recall alert;

(iii) Video news release, radio news release, b-roll package, YouTube, Instagram, or Vine video;

(iv) Newspaper, magazine, catalog, or other publication;

(v) Advertisement, newsletter, and service bulletin; and

(vi) Social media, including, but not limited to, Facebook, Google+, Twitter, Pinterest, Tumblr, Flickr, and blogs.

(2) *Direct voluntary recall notice.* A direct voluntary recall notice shall be used for each consumer for whom a firm has direct contact information, or when such information is reasonably obtainable from third parties, such as retailers, or from the firm's internal records, regardless of whether the information was collected for product registration, sales records, catalog orders, billing records, marketing purposes, warranty information, loyal purchaser clubs, or other such purposes. Direct contact information includes, but is not limited to: Name and address, telephone number, and electronic mail address. Direct voluntary recall notices may be transmitted using an electronic medium and in hard copy form. Direct voluntary recall notices should include in a readily-apparent location, a prominent and conspicuous statement (*e.g.,* by using large, bold, red typeface), which includes the term ''Safety Recall,'' and which otherwise highlights the importance of the communication.

(3) *Web site recall notice.* A Web site recall notice should be visible on a Web site's first entry point, such as a home page, should be clear and prominent, and should be interactive, by permitting consumers and other persons to obtain recall information and request a remedy directly on the Web site.

(4) *Social media notice.* A social media notice should be prominently placed and should remain prominently placed for at least 48 hours after initial placement.

(c) *Languages.* All voluntary recall notices should be in the English

language. In addition, a voluntary recall notice should be translated into additional languages, if, in the Commission's discretion, such translations are necessary or appropriate to adequately inform consumers or the public. Such voluntary recall notice translations should be transmitted in the same manner as, and along with, the English language voluntary recall notice. In circumstances requiring voluntary recall notice translations, the recalling firm should provide consumer recall support (such as call center scripts, in-store posters and other communications) in both English and the applicable translation. Where Spanish, in addition to English, is the appropriate language for a voluntary recall notice, the recalling firm should use the Commission's Spanish translation of the recall press release on its Web site and other agreed-upon locations.

§ 1115.34 Voluntary recall notice content guidelines.

Every voluntary recall notice should include the information set forth below:

(a) *Terms.* A voluntary recall notice should include the word ''recall'' in the heading and text.

(b) *Date.* A voluntary recall notice should include its date of release, issuance, posting, or publication.

(c) *Headline.* The headline (or equivalent language in an electronic medium) on the voluntary recall notice should be brief and should communicate: The name of the firm conducting the recall; the type of product being recalled; the hazard; the name of the U.S.-based manufacturer, importer, or retailer responsible for effectuating the remedy for consumers; and the name of the retailer, if the firm is the exclusive retailer of the product. The headline may include a reference to the nature of the remedy (such as refund, repair or replacement).

(d) *Description of product.* A voluntary recall notice should include a clear and concise statement of the information that will enable consumers and other persons to readily and accurately identify the specific product and distinguish the product from similar products. The information should allow consumers to determine readily whether they have, or may have been exposed to the product. To the extent applicable to a product, descriptive information that should appear on a voluntary recall notice should include, but not be limited to:

(1) The product's name, including informal and abbreviated names, by which customers and other persons should know or recognize the product;

(2) The product's intended or targeted use population (*e.g.,* infants, children, or adults);

(3) The product's colors and sizes;

(4) The product's model names and numbers, serial numbers, date codes, stock keeping unit (SKU) numbers, and tracking labels, including their exact locations on the product;

(5) Identification and exact locations of product tags, labels, and other identifying parts, and a statement of the specific identifying information found on each part; and

(6) Product photographs. Upon request by the Commission, a firm should provide to the Commission, digital, color photographs that are of high resolution and quality, in a format that is consistent with applicable Commission specifications. Effective notification may require multiple photographs and photographic angles.

(e) *Description of action being taken.* A voluntary recall notice should contain a clear and concise statement of the actions that a firm is taking concerning the product. These actions may include, but are not limited to, one or more of the following: Stop sale and distribution in commerce; recall to the distributor, retailer, or consumer level; repair; request return, and provide a replacement; and request a return, and provide a refund or credit.

(f) *Statement of number of product units.* A voluntary recall notice should state the approximate number of product units covered by the recall, including all product units manufactured, imported, and/or distributed in commerce.

(g) *Description of alleged substantial product hazard.* A voluntary recall notice should contain a clear and concise description of the product's actual or potential hazards that result from the product condition or circumstance giving rise to the recall. The description should enable consumers and other persons to readily identify the reasons that a firm is conducting a recall. The description should also enable consumers and other persons to readily identify and understand the risks and potential injuries or deaths associated with the product conditions and circumstances giving rise to the recall. The description should include:

(1) The product defect, fault, failure, or flaw, and/or problem giving rise to the recall;

(2) The type of hazard or risk, including, by way of example only, burn, fall, choking, laceration, entrapment, or death; and

(3) A statement that the hazard ''can'' occur when there have been incidents or injuries associated with the recalled product.

(h) *Identification of recalling firm.* A voluntary recall notice should identify the firm conducting the recall by stating the firm's legal name and commonly known trade name, the city and state of its headquarters, and Web domain or other effective and reasonably accessible electronic mechanism through which consumers and others can communicate with the firm. The notice should state whether the recalling firm is a manufacturer (including importer), retailer, or distributor.

(i) *Identification of manufacturer.* A voluntary recall notice should identify each manufacturer (including importer) of the product and the country of manufacture. Under the definition in section 3(a)(11) of the CPSA (15 U.S.C. 2052(a)(11)), a ''manufacturer'' means ''any person who manufactures or imports a consumer product.'' If a product has been manufactured outside of the United States, a voluntary recall notice should identify the foreign manufacturer and the United States importer. A voluntary recall notice should identify the manufacturer by stating the manufacturer's legal name and the city and state of its headquarters, or, if a foreign manufacturer, the foreign manufacturer's legal name and the city and country of its headquarters.

(j) *Identification of significant retailers.* A voluntary recall notice should identify each significant retailer of the product. A recall notice should identify such a retailer by stating the retailer's commonly known trade name. Under the definition in Section 3(a)(13) of the CPSA (15 U.S.C. 2052(a)(13)), a ''retailer'' means ''a person to whom a consumer product is delivered or sold for purposes of sale or distribution by such person to a consumer.'' A product's retailer is ''significant'' if, upon the Commission's information and belief, any one or more of the circumstances set forth below is present (the Commission may request manufacturers (including importers), retailers and distributors to provide information relating to these circumstances):

(1) The retailer was the exclusive retailer of the product;

(2) The retailer was an importer of the product;

(3) The retailer has multiple stores nationwide or regionally;

(4) The retailer sold, or held for purposes of sale or distribution in commerce, a significant number of the total manufactured, imported, or distributed units of the product; or;

(5) Identification of the retailer is in the public interest.

(k) *Region.* Where necessary or appropriate to assist consumers in determining whether they have the product at issue, a description of the region where the product was sold, or held for purposes of sale or distribution in commerce, should be provided.

(l) *Dates of manufacture and sale.* A voluntary recall notice should state the month and year in which the manufacture of the product began and ended, and the month and year in which the retail sales of the product began and ended. These dates should be included for each make and model of the product.

(m) *Price.* A voluntary recall notice should state the approximate retail price or price range of the product.

(n) *Description of incidents, injuries and deaths.* A voluntary recall notice should contain a clear and concise summary description of all incidents (including, but not limited to, property damage), injuries, and deaths associated with the product, conditions or circumstances giving rise to the recall, as well as a statement of the number of such incidents, injuries, and deaths. The description should allow consumers and other persons to understand readily the nature and extent of the incidents and injuries. A voluntary recall notice should provide the age and state of residence of all persons killed.

(1) If, after the issuance of the voluntary recall notice, the firm receives information that a significant number of additional incidents, or one or more fatalities associated with the product have occurred, such information should be reflected in an update to the notice on the firm's Web site.

(2) The firm should immediately notify the Commission of all newly reported injuries and/or fatalities in order to permit the issuance of an updated voluntary recall notice.

(o) *Description of remedy.* A voluntary recall notice should contain a clear and concise statement, readily understandable by consumers and other persons, of:

(1) Each remedy available to a consumer for the product conditions or circumstances giving rise to the recall. Remedies include, but are not limited to, refunds, product repairs, product replacements, rebates, coupons, gifts, premiums, and other incentives.

(2) All specific actions that a consumer must take to obtain each remedy, including, but not limited to, the following: Instructions on how to participate in the recall. These actions may include, but are not limited to, contacting a firm, removing the product from use, discarding the product, forwarding the product to the manufacturer, returning the product to the retailer, scheduling an in-home repair, or removing or disabling a part of the product.

(3) All specific information that a consumer needs to obtain each remedy and to obtain all information about each remedy. This information may include, but is not limited to, the following: Manufacturer, retailer, and distributor contact information (such as name, address, telephone, and facsimile number, email address, and Web site address); whether telephone calls will be toll-free or collect; and telephone number days and hours of operation, including time zone. If inclusion of all model names and model and serial numbers in the voluntary recall notice is complicated or extensive, the voluntary recall notice should refer consumers to the recalling firm's Web site, call center, or similar customer service resource.

(4) If, after the issuance of the voluntary recall notice, the firm intends to change the process or nature of the remedy, this information should be promptly communicated to the Commission. Changes to the process or nature of the remedy should be reflected in an update to the voluntary recall notice agreed to by the Commission and the firm. The updated voluntary recall notice should be posted promptly on the firm's Web site and the Commission's Web site and otherwise transmitted to consumers in a manner consistent with the communication of the initial voluntary recall notice.

(p) *Compliance program.* A voluntary recall notice may contain a reference to applicable compliance programs or requirements, as appropriate.

(q) *Other information.* A voluntary recall notice should contain such other information as the Commission and the recalling firm deem appropriate.

§ 1115.35 Multiple products or mode.

For each product or model covered by a voluntary recall notice, the notice should comport with the guidelines set forth in § 1115.34.

Dated: November 14, 2013.

Todd A. Stevenson,

Secretary, Consumer Product Safety Commission.

[FR Doc. 2013–27656 Filed 11–20–13; 8:45 am]

BILLING CODE 6355–01–P

AGENCY FOR INTERNATIONAL DEVELOPMENT

22 CFR Part 226

RIN 0412–AA71

Partner Vetting in USAID Assistance; Correction

AGENCY: Agency for International Development.

ACTION: Notice of proposed rulemaking; correction.

SUMMARY: USAID is allowing an additional 15 days to provide comments on its proposed Partner Vetting in USAID Assistance Rule. There was a technical error in the email address, provided in the Notice of Proposed Rulemaking that was published in the **Federal Register** on August 29, 2013, for receipt of public comments on the proposed rule. The technical error in the email address prevented comments that were submitted through that email address from being reviewable by USAID. As a result, USAID, with the approval of the Office of Management and Budget, is issuing a correction notice allowing public comment on the proposed rulemaking for an additional 15 days. The proposed rulemaking is unchanged from the original publication in August 2013 and amends the regulation governing the administration of USAID-funded assistance awards to implement a Partner Vetting System (PVS).

FOR FURTHER INFORMATION CONTACT: George Higginbotham, Telephone: 202–712–1948; Email: *ghigginbotham@usaid.gov.*

Correction

In the **Federal Register** of August 29, 2013, in FR Doc. 2013–20846, on page 53375, in the second column, correct the email address to which comments should be submitted. Electronic comments should be sent to the following email: *m.rulemaking@usaid.gov.* Comments must be submitted on or before December 6, 2013.

Dated: November 8, 2013.

Angelique M. Crumbly,

Agency Regulatory Official, U.S. Agency for International Development.

[FR Doc. 2013–27921 Filed 11–20–13; 8:45 am]

BILLING CODE P

DEPARTMENT OF HOMELAND SECURITY

Coast Guard

33 CFR Part 117

[Docket No. USCG–2013–0848]

RIN 1625–AA09

Drawbridge Operation Regulations; Gulf Intracoastal Waterway, Venice, FL

AGENCY: Coast Guard, DHS.

ACTION: Notice of proposed rulemaking.

SUMMARY: The Coast Guard proposes to change the operating schedule that governs the Hatchett Creek (US–41) Twin Bridges, Gulf Intracoastal Waterway mile 56.9, Venice, FL. Changing the operational scheduled of the Hatchett Creek (US–41) Twin Bridges will allow the Iron Man Triathlon event to be unimpeded for an eight hour period. This event is anticipated to be scheduled on the second Sunday of November annually from 9 a.m. to 5 p.m.

DATES: Comments and related material must reach the Coast Guard on or before February 19, 2014.

ADDRESSES: You may submit comments identified by docket number USCG–2013–0848 using any one of the following methods:

(1) *Federal eRulemaking Portal: http://www.regulations.gov.*

(2) *Fax:* 202–493–2251.

(3) *Mail or Delivery:* Docket Management Facility (M–30), U.S. Department of Transportation, West Building Ground Floor, Room W12–140, 1200 New Jersey Avenue SE., Washington, DC 20590–0001. Deliveries accepted between 9 a.m. and 5 p.m., Monday through Friday, except federal holidays. The telephone number is 202–366–9329.

See the ''Public Participation and Request for Comments'' portion of the **SUPPLEMENTARY INFORMATION** section below for instructions on submitting comments. To avoid duplication, please use only one of these four methods.

FOR FURTHER INFORMATION CONTACT: If you have questions on this proposed rule, call or email Ms. Danielle Mauser, Seventh Coast Guard District, Bridge Branch, 305–415–6946, email *Danielle.L.Mauser2@uscg.mil*. If you have questions on viewing or submitting material to the docket, call Barbara Hairston, Program Manager, Docket Operations, telephone 202–366–9826.

SUPPLEMENTARY INFORMATION:

Table of Acronyms

CFR Code of Federal Regulations
DHS Department of Homeland Security
FR Federal Register
NPRM Notice of Proposed Rulemaking
§ Section Symbol
U.S.C. United States Code

A. Public Participation and Request for Comments

We encourage you to participate in this proposed rulemaking by submitting comments and related materials. All comments received will be posted, without change to *http://www.regulations.gov* and will include any personal information you have provided.

1. Submitting Comments

If you submit a comment, please include the docket number for this proposed rulemaking (USCG–2013–0848), indicate the specific section of this document to which each comment applies, and provide a reason for each suggestion or recommendation. You may submit your comments and material online (*http://www.regulations.gov*), or by fax, mail or hand delivery, but please use only one of these means. If you submit a comment online via *http://www.regulations.gov*, it will be considered received by the Coast Guard when you successfully transmit the comment. If you fax, hand deliver, or mail your comment, it will be considered as having been received by the Coast Guard when it is received at the Docket Management Facility. We recommend that you include your name and a mailing address, an email address, or a phone number in the body of your document so that we can contact you if we have questions regarding your submission.

To submit your comment online, go to *http://www.regulations.gov*, type the docket number USCG–2013–0848 in the ''SEARCH'' box and click ''SEARCH.'' Click on ''Submit a Comment'' on the line associated with this rulemaking. If you submit your comments by mail or hand delivery, submit them in an unbound format, no larger than 8½ by 11 inches, suitable for copying and electronic filing. If you submit them by mail and would like to know that they reached the Facility, please enclose a stamped, self-addressed postcard or envelope. We will consider all comments and material received during the comment period and may change the rule based on your comments.

2. Viewing Comments and Documents

To view comments, as well as documents mentioned in this preamble as being available in the docket, go to *http://www.regulations.gov*, type the docket number USCG–2013–0848 in the ''SEARCH'' box and click ''SEARCH.'' Click on Open Docket Folder on the line associated with this rulemaking. You may also visit the Docket Management Facility in Room W12–140 on the ground floor of the Department of Transportation West Building, 1200 New Jersey Avenue SE., Washington, DC, 20590, between 9 a.m. and 5 p.m., Monday through Friday, except Federal holidays.

3. Privacy Act

Anyone can search the electronic form of comments received into any of our dockets by the name of the individual submitting the comment (or signing the comment, if submitted on behalf of an association, business, labor union, etc.). You may review a Privacy Act notice regarding our public dockets in the January 17, 2008, issue of the **Federal Register** (73 FR 3316).

4. Public Meeting

We do not now plan to hold a public meeting. But you may submit a request for one using one of the three methods specified under **ADDRESSES**. Please explain why one would be beneficial. If we determine that one would aid this rulemaking, we will hold one at a time and place announced by a later notice in the **Federal Register**.

B. Regulatory History and Information

The current operating regulation governing the Hatchett Creek (US–41) bridges, Gulf Intracoastal Waterway mile 56.9 at Venice, FL as listed in § 117.287(b), provides the draw of the Hatchett Creek (US–41) bridge, mile 56.9 at Venice, shall open on signal, except that, from 7 a.m. to 4:20 p.m., Monday through Friday except Federal holidays, the draw need open only on the hour, 20 minutes after the hour, and 40 minutes after the hour and except between 4:25 p.m. and 5:25 p.m. when the draw need not open. On Saturdays, Sundays, and Federal holidays from 7:30 a.m. to 6 p.m. the draw need open only on the hour, quarter-hour, half-hour, and three quarter-hour.

C. Basis and Purpose

The proposed changes will have a minor impact on vessels transiting the Gulf Intracoastal Waterway in the vicinity of Venice, Florida and will still meet the reasonable needs to navigation. This action will accommodate the Sarasota Iron Man Triathlon held annually on the second Sunday of November.

D. Discussion of Proposed Rule

This proposed rule will allow the Hatchett Creek Bridge to remain closed to navigation for eight hours once a year for an annual event. The Hatchett Creek (US–41) Bridge provides a vertical clearance of 16 feet at mean high water in the closed position and a horizontal clearance of 90 feet. Vessels with a height of less than 16 feet may pass through the bridge at any time. The Gulf of Mexico is the only alternative route and this route would be unacceptable for certain classes of vessels such as tugs and barges.

E. Regulatory Analyses

We developed this proposed rule after considering numerous statutes and executive orders related to rulemaking. Below we summarize our analyses based on these statutes or executive orders.

1. Regulatory Planning and Review

This proposed rule is not a ''significant regulatory action'' under section 3(f) of Executive Order 12866, Regulatory Planning and Review, as supplemented by Executive Order 13563, Improving Regulation and Regulatory Review, and does not require an assessment of potential costs and benefits under section 6(a)(3) of Order 12866 or under section 1 of Executive Order 13563. The Office of Management and Budget has not reviewed it under those Orders.

This action will have a minor impact on vessels transiting the Gulf Intracoastal Waterway in the vicinity of Venice, Florida and will still meet the reasonable needs of navigation.

2. Impact on Small Entities

The Regulatory Flexibility Act of 1980 (RFA), 5 U.S.C. 601–612, as amended, requires federal agencies to consider the potential impact of regulations on small entities during rulemaking. The term ''small entities'' comprises small businesses, not-for-profit organizations that are independently owned and operated and are not dominant in their fields, and governmental jurisdictions with populations of less than 50,000. The Coast Guard certifies under 5 U.S.C. 605(b) that this proposed rule would not have a significant economic impact on a substantial number of small entities.

This proposed rule would affect the following entities, some of which might be small entities: The owners or operators of vessels needing the draw to open for safe transit under the bridge from 9 a.m. to 5 p.m. on the second Sunday of November each year.

This action will not have a significant economic impact on a substantial number of small entities for the following reasons. This rule will be in effect for eight hours annually. Vessels that can safely transit under the bridge may do so at any time. Before the effective period, the Coast Guard will issue maritime advisories widely available to users of the river.

If you think that your business, organization, or governmental jurisdiction qualifies as a small entity and that this rule would have a significant economic impact on it, please submit a comment (see **ADDRESSES**) explaining why you think it qualifies and how and to what degree this rule would economically affect it.

3. Assistance for Small Entities

Under section 213(a) of the Small Business Regulatory Enforcement Fairness Act of 1996 (Pub. L. 104–121), we want to assist small entities in understanding this proposed rule. If the rule would affect your small business, organization, or governmental jurisdiction and you have questions concerning its provisions or options for compliance, please contact the person listed in the **FOR FURTHER INFORMATION CONTACT**, above. The Coast Guard will not retaliate against small entities that question or complain about this proposed rule or any policy or action of the Coast Guard.

4. Collection of Information

This proposed rule would call for no new collection of information under the Paperwork Reduction Act of 1995 (44 U.S.C. 3501–3520).

5. Federalism

A rule has implications for federalism under Executive Order 13132, Federalism, if it has a substantial direct effect on the States, on the relationship between the national government and the States, or on the distribution of power and responsibilities among the various levels of government. We have analyzed this proposed rule under that Order and have determined that it does not have implications for federalism.

6. Protest Activities

The Coast Guard respects the First Amendment rights of protesters. Protesters are asked to contact the person listed in the **FOR FURTHER INFORMATION CONTACT** section to coordinate protest activities so that your message can be received without jeopardizing the safety or security of people, places or vessels.

7. Unfunded Mandates Reform Act

The Unfunded Mandates Reform Act of 1995 (2 U.S.C. 1531–1538) requires Federal agencies to assess the effects of their discretionary regulatory actions. In particular, the Act addresses actions that may result in the expenditure by a State, local, or tribal government, in the aggregate, or by the private sector of $100,000,000 (adjusted for inflation) or more in any one year. Though this proposed rule will not result in such an expenditure, we do discuss the effects of this rule elsewhere in this preamble.

8. Taking of Private Property

This proposed rule would not cause a taking of private property or otherwise have taking implications under Executive Order 12630, Governmental Actions and Interference with Constitutionally Protected Property Rights.

9. Civil Justice Reform

This proposed rule meets applicable standards in sections 3(a) and 3(b)(2) of Executive Order 12988, Civil Justice Reform, to minimize litigation, eliminate ambiguity, and reduce burden.

10. Protection of Children

We have analyzed this proposed rule under Executive Order 13045, Protection of Children from Environmental Health Risks and Safety Risks. This rule is not an economically significant rule and would not create an environmental risk to health or risk to safety that might disproportionately affect children.

11. Indian Tribal Governments

This proposed rule does not have tribal implications under Executive Order 13175, Consultation and Coordination with Indian Tribal Governments, because it would not have a substantial direct effect on one or more Indian tribes, on the relationship between the Federal Government and Indian tribes, or on the distribution of power and responsibilities between the Federal Government and Indian tribes.

12. Energy Effects

This proposed rule is not a ''significant energy action'' under Executive Order 13211, Actions Concerning Regulations That Significantly Affect Energy Supply, Distribution, or Use.

13. Technical Standards

This proposed rule does not use technical standards. Therefore, we did not consider the use of voluntary consensus standards.

14. Environment

We have analyzed this rule under Department of Homeland Security

Management Directive 023–01 and Commandant Instruction M16475.lD, which guides the Coast Guard in complying with the National Environmental Policy Act of 1969 (NEPA)(42 U.S.C. 4321–4370f), and have made a preliminary determination that this action is one of a category of actions which do not individually or cumulatively have a significant effect on the human environment. This proposed rule simply promulgates the operating regulations or procedures for drawbridges. This rule is categorically excluded, under figure 2–1, paragraph (32)(e), of the Instruction.

Under figure 2–1, paragraph (32)(e), of the Instruction, an environmental analysis checklist and a categorical exclusion determination are not required for this rule. We seek any comments or information that may lead to the discovery of a significant environmental impact from this proposed rule.

List of Subjects in 33 CFR Part 117

Bridges.

For the reasons discussed in the preamble, the Coast Guard proposes to amend 33 CFR part 117 as follows:

PART 117—DRAWBRIDGE OPERATION REGULATIONS

■ 1. The authority citation for part 117 continues to read as follows:

Authority: 33 U.S.C. 499; 33 CFR 1.05–1; Department of Homeland Security Delegation No. 0170.1.

■ 2. In § 117.287, revise paragraph (b) to read as follows:

§ 117.287 Gulf Intracoastal Waterway.

* * * * *

(b) The draw of the Hatchett Creek (U.S.–41) bridge, mile 56.9 at Venice, shall open on signal, except that, from 7 a.m. to 4:20 p.m., Monday through Friday except Federal holidays, the draw need open only on the hour, 20 minutes after the hour, and 40 minutes after the hour and except between 4:25 p.m. and 5:25 p.m. when the draw need not open. On Saturdays, Sundays, and Federal holidays from 7:30 a.m. to 6 p.m. the draw need open only on the hour, quarter-hour, half-hour, and three quarter-hour. This bridge need not open to navigation on the second Sunday of November annually from 9 a.m. to 5 p.m. to facilitate the Iron Man Triathlon event.

* * * * *

Dated: October 25, 2013.

J.H. Korn,

Rear Admiral, U.S. Coast Guard,Commander, Seventh Coast Guard District.

[FR Doc. 2013–27564 Filed 11–20–13; 8:45 am]

BILLING CODE 9110–04–P

POSTAL REGULATORY COMMISSION

39 CFR Part 3050

[Docket No. RM2014–1; Order No. 1877]

Periodic Reporting (Proposals Six Through Nine)

AGENCY: Postal Regulatory Commission.

ACTION: Notice of proposed rulemaking.

SUMMARY: The Commission is noticing a recent Postal Service filing concerning the initiation of a proceeding to consider proposed changes in analytical principles (Proposals Six Through Nine). This notice informs the public of the filing, invites public comment, and takes other administrative steps.

DATES: *Comments are due:* December 2, 2013. *Reply comments are due:* December 9, 2013.

ADDRESSES: Submit comments electronically via the Commission's Filing Online system at *http://www.prc.gov*. Those who cannot submit comments electronically should contact the person identified in the **FOR FURTHER INFORMATION CONTACT** section by telephone for advice on filing alternatives.

FOR FURTHER INFORMATION CONTACT: Stephen L. Sharfman, General Counsel, at 202–789–6820.

SUPPLEMENTARY INFORMATION:

Table of Contents

I. Introduction
II. Proposals
III. Notice and Comment
IV. Ordering Paragraphs

I. Introduction

On November 8, 2013, the Postal Service filed a petition pursuant to 39 CFR 3050.11 requesting the Commission initiate an informal rulemaking proceeding to consider three changes to analytical principles for use in periodic reporting.[1] Petition at 1. The Petition labels the proposed analytical principle changes attached to its Petition filed on November 8, 2013 in this docket as Proposals Six through Eight. On November 12, 2013, the Postal Service filed an errata to its Petition to add Proposal Nine attached to its Revised Petition.[2] The changes contained in Proposals Six through Nine are described below.

II. Proposals

A. Proposal Six: Proposed Changes in Stamp Fulfillment Services (SFS) Handling and Philatelic Sales Cost Estimation Models

To address a concern raised by the Commission in the FY 2012 ACD, the Postal Service proposes to update its methodology for calculating the costs for Philatelic Sales and the handling costs of SFS in order to align the product description in the Mail Classification Schedule (MCS).

To do so, the Postal Service proposes to update the cost model for SFS handling costs (StFS2012.xls) and the way handling revenue (the $1.25 and the $1.75 fees) is classified by not including the handling costs and revenue (the $1.25 and $1.75 fees) for Philatelic Sales in the SFS handling workpaper going forward. The handling costs of Philatelic Sales will be included solely in the Philatelic Sales cost estimation workpaper (StFS Philatelic2012.xls). *Id.*

The Postal Service further states that this proposal also seeks to update the methodology in order to capture the window costs of Philatelic products sold in retail.

B. Proposal Seven: Change in Attributable Costs for Competitive Post Office Box Service Enhancements

The Postal Service states Proposal Seven updates and improves the methodology for developing attributable costs for the enhancements to competitive Post Office Box service, as requested by the Commission in the FY 2012 ACD at 163 and 199. There are two elements of these costs: (1) handling of packages from third-party carriers; and (2) information technology costs. *Id.,* Proposal 7 at 1.

The Postal Service filed under seal a non-public version of Proposal Seven in USPS–RM2014–1/NP1 which includes material provided under seal in the FY 2012 Annual Compliance Report, as well as updates to that material.[3]

The proposed methodology for information technology costs, (which is a description of the calculation done for FY 2012) entails consulting with Engineering to determine: (1) The

[1] Petition of the United States Postal Service for the Initiation of a Proceeding to Consider Proposed Changes in Analytical Principles (Proposals Six through Eight), November 8, 2013 (Petition).

[2] Notice of the United States Postal Service of Revision to Add Proposal Nine to the Petition for Rulemaking—Errata, November 12, 2012 (Revised Petition).

[3] Notice of Filing of USPS–RM2014–1/NP1 and Application for Nonpublic Treatment, November 8, 2013.

estimated proportion of time spent by contractor engineers on maintaining the Competitive PO Box service Web site and software; (2) any server costs; and (3) any other contractor costs related to Web site and software development. The estimated time proportions are applied to the hourly rates of the contractor engineers involved to determine a labor cost, which is added to the server and additional contractor costs. *Id.,* Proposal 7 at 2. The Postal Service states the proposed methodology is a detailed description or explanation of the proposed calculations as requested by the Commission. *Id.*

C. Proposal Eight: Changes to MODS Operation Groups for Productivity Calculations

The Postal Service states that Proposal Eight would modify the MODS operation groups reported in Docket No. ACR2013 folder USPS–FY13–23 to reflect operational changes and other cost modeling requirements. In Docket No. ACR2012, folder USPS–FY12–23 provided MODS productivity data (TPF or TPH per workhour) for a variety of operation groups related to letter, flat, parcel, and bundle sorting. The MODS productivity data are used to parameterize a number of cost models presented in the ACR, which are used to compute disaggregated product costs for purposes including measurement of worksharing cost avoidances. *Id.,* Proposal 8 at 1.

The Postal Service further states that operational changes such as introduction and retirement of mail processing equipment periodically require conforming changes to MODS data reporting, as cost model structures are modified to reflect currently active operations. When equipment and associated operations are withdrawn from service, there may be no data, or insufficient data, for reliable productivity reporting. Less frequently, changes to MODS methodology may affect the validity of MODS data. *Id.*

The Petition includes a table of the twelve USPS–FY12–23 Group(s) and their respective Proposed Group for USPS–FY13–23. The Postal Service says that the productivity calculations for the new groups would continue to use the methods from USPS–FY12–23. As applicable, the mailflow models would employ productivities from the consolidated operation groups in place of the previous disaggregated groups. *Id.* at 2.

The Postal Service has filed modified versions of the USPS–FY12–10 and USPS–FY12–11 models with proposed changes highlighted in the models. The Postal Service notes that the productivity changes affect the non-machinable categories of mail as the manual letter productivities affect those categories the most. Changes to machinable/automation rate categories are because of the change in the CRA adjustment factor. *Id.* at 4.

D. Proposal Nine: Changes in In-Office Cost System (IOCS) Encirclement Rules

In Proposal Nine, the Postal Service proposes to update the encirclement rules for Delivery Confirmation to reflect changes in products. In the In-Office Cost System (IOCS), encirclement is the process of assigning the cost of handling a mailpiece with an Extra Service to the Extra Service rather than to the host mailpiece. The Postal Service states that encirclement is warranted when an Extra Service is the primary reason that an employee has to handle a mailpiece. Revised Petition, Proposal 9 at 1.

Specifically, the Postal Service proposes to stop encircling costs at acceptance to Delivery Confirmation for IOCS tallies after January 27, 2013 for Priority Mail (retail), Standard Post (retail), Parcel Select Lightweight, and First-Class Package Service. The Postal Service reasons that beginning January 27, 2013, the products began to include Tracking (Delivery Confirmation) as a free service. Therefore, after that date, costs should no longer be encircled to the Delivery Confirmation service, but instead should be assigned to the host product. *Id.*

III. Notice and Comment

The Commission establishes Docket No. RM2014–1 for consideration of matters raised by the Petition and the Revised Petition. For specific details on each of the proposals, interested persons are encouraged to review the Petition and Revised Petition, which are available via the Commission's Web site at *http://www.prc.gov*. The Postal Service filed portions of its supporting documentation relating to Proposal Seven under seal as part of a non-public annex. Information concerning access to these non-public materials is located in 39 CFR part 3007.

Interested persons may submit comments on the Petition no later than December 2, 2013. Reply comments are due no later than December 9, 2013. Pursuant to 39 U.S.C. 505, John P. Klingenberg is designated as an officer of the Commission (Public Representative) to represent the interests of the general public in this proceeding.

IV. Ordering Paragraphs

It is ordered:

1. The Commission establishes Docket No. RM2014–1 for consideration of the matters raised by the Petition of the United States Postal Service for the Initiation of a Proceeding to Consider Proposed Changes in Analytical Principles (Proposals Six through Eight), filed November 8, 2013 and the Revised Petition of the United States Postal Service for the Initiation of a Proceeding to Consider Proposed Changes in Analytical Principles (Proposals Six through Nine), filed November 12, 2013.

2. Comments by interested persons in this proceeding are due no later than December 2, 2013. Reply comments are due no later than December 9, 2013.

3. Pursuant to 39 U.S.C. 505, the Commission appoints John P. Klingenberg to serve as an officer of the Commission (Public Representative) to represent the interests of the general public in this docket.

4. The Secretary shall arrange for publication of this order in the **Federal Register**.

By the Commission.

Ruth Ann Abrams,

Acting Secretary.

[FR Doc. 2013–27826 Filed 11–20–13; 8:45 am]

BILLING CODE 7710–FW–P

ENVIRONMENTAL PROTECTION AGENCY

40 CFR Parts 51

[EPA–HQ–OAR–2013–0694, FRL–9903–28–OAR]

Identification of Nonattainment Classification and Deadlines for Submission of State Implementation Plan (SIP) Provisions for the 1997 Fine Particle ($PM_{2.5}$) National Ambient Air Quality Standard (NAAQS) and 2006 $PM_{2.5}$ NAAQS

AGENCY: Environmental Protection Agency (EPA).

ACTION: Proposed rule.

SUMMARY: On January 4, 2013, in *Natural Resources Defense Council (NRDC)* v. *EPA,* the D.C. Circuit Court (Court) remanded to the EPA the ''Final Clean Air Fine Particle Implementation Rule'' (April 25, 2007) and the ''Implementation of the New Source Review (NSR) Program for Particulate Matter Less than 2.5 Micrometers ($PM_{2.5}$)'' final rule (May 16, 2008) (collectively, ''1997 $PM_{2.5}$ Implementation Rules''). The Court found that the EPA erred in implementing the 1997 $PM_{2.5}$ National

Ambient Air Quality Standards (NAAQS) pursuant solely to the general implementation provisions of subpart 1 of Part D of Title I of the Clean Air Act (CAA or Act), without also considering the particulate matter-specific provisions of subpart 4 of Part D. The Court's ruling remanded the rules to the EPA to address implementation of the 1997 $PM_{2.5}$ NAAQS under subpart 4. This proposed rulemaking identifies the classification under subpart 4 for areas currently designated nonattainment for the 1997 and/or 2006 $PM_{2.5}$ standards, the deadlines for states to submit attainment-related and new source review (NSR) state implementation plan (SIP) elements required for these areas pursuant to subpart 4, and the EPA guidance that is currently available regarding subpart 4 requirements. The proposed deadlines for 1997 and 2006 $PM_{2.5}$ attainment-related SIP submissions and NSR requirements for nonattainment areas would replace previous deadlines that were set solely pursuant to subpart 1. Specifically, the EPA is proposing to identify the initial classification of current 1997 and/or 2006 $PM_{2.5}$ nonattainment areas as ''moderate,'' and the EPA is proposing to set a deadline of December 31, 2014, for submission of remaining required SIP submissions for these areas, pursuant to and considering the application of subpart 4. This rulemaking affects eight nonattainment areas in five states.

DATES: *Comments.* Comments must be received on or before December 23, 2013.

ADDRESSES: Submit your comments, identified by Docket ID No. EPA–HQ–OAR–2013–0694 by one of the following methods:

- *www.regulations.gov:* Follow the on-line instructions for submitting comments.
- *Email: a-and-r-docket@epa.gov.*
- *Mail:* Air and Radiation Docket and Information Center, Attention Docket ID No. EPA–HQ–OAR- 2013–0694, Environmental Protection Agency, 1200 Pennsylvania Avenue NW., Washington, DC 20460. Mail Code: 28221T. Please include two copies if possible. In addition, please mail a copy of your comments on the information collection provisions to the Office of Information and Regulatory Affairs, Office of Management and Budget (OMB), Attn: Desk Officer for EPA, 725 17th St. NW., Washington, DC 20503.
- *Hand Delivery:* Air and Radiation Docket and Information Center, Attention Docket ID No. EPA–HQ–OAR–2013–0694, Environmental Protection Agency in the EPA Headquarters Library, Room Number 3334 in the WJC West Building, located at 1301 Constitution Ave. NW., Washington, DC. The EPA/DC Public Reading Room is open from 8:30 a.m. to 4:30 p.m. Eastern Standard Time (EST), Monday through Friday, Air and Radiation Docket and Information Center.
- *Instructions:* Direct your comments to Docket ID No. EPA–HQ–OAR–2013–0694. The EPA's policy is that all comments received will be included in the public docket without change and may be made available on-line at *www.regulations.gov,* including any personal information provided, unless the comment includes information claimed to be confidential business information (CBI) or other information whose disclosure is restricted by statute. Do not submit information that you consider to be CBI or otherwise protected through *www.regulations.gov* or email. The *www.regulations.gov* Web site is an ''anonymous access'' system, which means the EPA will not know your identity or contact information unless you provide it in the body of your comment. If you send an email comment directly to the EPA without going through *www.regulations.gov,* your email address will be automatically captured and included as part of the comment that is placed in the public docket and made available on the Internet. If you submit an electronic comment, the EPA recommends that you include your name and other contact information in the body of your comment and with any CD you submit. If the EPA cannot read your comment due to technical difficulties and cannot contact you for clarification, the EPA may not be able to consider your comment. Electronic files should avoid the use of special characters and any form of encryption and be free of any defects or viruses. For additional information about the EPA's public docket, visit the EPA Docket Center homepage at *http://www.epa.gov/epahome/dockets.htm.* For additional instructions on submitting comments, go to the **SUPPLEMENTARY INFORMATION** section of this document.

Docket: All documents in the docket are listed in *www.regulations.gov.* Although listed in the index, some information is not publicly available, i.e., CBI or other information whose disclosure is restricted by statute. Certain other material, such as copyrighted material, is not placed on the Internet and will be publicly available only in hard copy form. Publicly available docket materials are available either electronically in *www.regulations.gov* or in hard copy at the Air and Radiation Docket and Information Center in the EPA Headquarters Library, Room Number 3334 in the WJC West Building, located at 1301 Constitution Ave. NW., Washington, DC. The Public Reading Room is open from 8:30 a.m. to 4:30 p.m., Monday through Friday, excluding legal holidays. The telephone number for the Public Reading Room is (202) 566–1744.

FOR FURTHER INFORMATION CONTACT: For further general information on this rulemaking, contact Ms. Mia South, Air Quality Policy Division, Office of Air Quality Planning and Standards (C539–01), Environmental Protection Agency, Research Triangle Park, North Carolina 27711; telephone number (919) 541–5550; fax number (919) 541–5315; email at *south.mia@epa.gov.*

SUPPLEMENTARY INFORMATION:

I. General Information

A. Does this action apply to me?

Entities potentially affected directly by this proposal include state, local and tribal governments.

B. What should I consider as I prepare my comments for the EPA?

1. Submitting CBI. Do not submit CBI information to the EPA through *www.regulations.gov* or email. Clearly mark the part or all of the information that you claim to be CBI. For CBI information on a disk or CD ROM that you mail to the EPA, mark the outside of the disk or CD ROM as CBI and then identify electronically within the disk or CD ROM the specific information that is claimed as CBI. In addition to one complete version of the comment that includes information claimed as CBI, a copy of the comment that does not contain the information claimed to be CBI must be submitted for inclusion in the public docket. Information marked CBI will not be disclosed except in accordance with procedures set forth in 40 CFR part 2.

2. Tips for Preparing Your Comments. When submitting comments, remember to:

- Identify the rulemaking by docket number and other identifying information (subject heading, **Federal Register** date and page number).
- Follow directions—The agency may ask you to respond to specific questions or organize comments by referencing a Code of Federal Regulations (CFR) part or section number.
- Explain why you agree or disagree; suggest alternatives and substitute language for your requested changes.

- Describe any assumptions and provide any technical information and/or data that you used.
- If you estimate potential costs or burdens, explain how you arrived at your estimate in sufficient detail to allow for it to be reproduced.
- Provide specific examples to illustrate your concerns, and suggest alternatives.
- Explain your views as clearly as possible, avoiding the use of profanity or personal threats.
- Make sure to submit your comments by the comment period deadline identified.

C. Where can I get a copy of this document and other related information?

In addition to being available in the docket, an electronic copy of this notice will be posted at *http://www.epa.gov/airquality/particlepollution/actions.html.*

D. How is this notice organized?

The information presented in this notice is organized as follows:

I. General Information
A. Does this action apply to me?
B. What should I consider as I prepare my comments for the EPA?
C. Where can I get a copy of this document and other related information?
D. How is this notice organized?
II. What actions is the EPA proposing?
III. Background for Proposal
IV. Proposed Initial Identification of ''Moderate'' Classification for $PM_{2.5}$ Nonattainment Areas Under Subpart 4
V. Proposed Deadlines for Submission of Remaining Required Attainment-Related SIP Elements
VI. What guidance is currently available to States regarding subpart 4 requirements?
VII. Proposed Actions
VIII. Statutory and Executive Order Reviews
A. Executive Order 12866: Regulatory Planning and Review and Executive Order 13563: Improving Regulation and Regulatory Review
B. Paperwork Reduction Act
C. Regulatory Flexibility Act
D. Unfunded Mandates Reform Act
E. Executive Order 13132: Federalism
F. Executive Order 13175: Consultation and Coordination With Indian Tribal Governments
G. Executive Order 13045: Protection of Children From Environmental Health and Safety Risks
H. Executive Order 13211: Actions Concerning Regulations That Significantly Affect Energy Supply, Distribution, or Use
I. National Technology Transfer and Advancement Act
J. Executive Order 12898: Federal Actions To Address Environmental Justice in Minority Populations and Low-Income Populations
Statutory Authority
List of Subjects

II. What actions is the EPA proposing?

The EPA's proposed rulemaking responds to the Court's remand in *NRDC v. EPA* by notifying the states of the EPA's initial modification of its previous approach to implementation of the 1997 and 2006 $PM_{2.5}$ standards. This proposed rulemaking identifies: (1) The classification under subpart 4 of areas currently designated nonattainment for the 1997 and/or 2006 $PM_{2.5}$ standards; (2) the deadline for states to submit any remaining attainment-related and NSR SIP submissions required pursuant to subpart 4; and (3) the EPA guidance and relevant rulemakings that are currently available regarding implementation of subpart 4 requirements. Specifically, the EPA is proposing to identify the initial classification of areas currently designated nonattainment for the 1997 and the 2006 $PM_{2.5}$ standards as ''moderate,'' and to set a deadline of December 31, 2014, for submission of any attainment-related and NSR SIP elements that may be due for these areas in consideration of the requirements under subpart 4. Additional details regarding attainment-related and NSR SIP elements requirements of subpart 4 may also be addressed under separate EPA guidance and/or rulemaking. With regard to SIPs that previously have been submitted solely under the requirements of subpart 1, and which are now also subject to subpart 4 requirements, states should consult with their respective EPA regional offices for assistance in evaluating the appropriate course for addressing the effect of subpart 4 requirements on these submissions and for accomplishing any additional state work and the EPA review. The EPA expects that the existing submittals will already satisfy many of the subpart 4 requirements, and, to the extent that additional information is needed for specific requirements, every effort will be made to avoid duplicative work from the states.

III. Background for Proposal

On January 4, 2013, in *NRDC* v. *EPA,* the D.C. Circuit Court remanded to the EPA the 1997 $PM_{2.5}$ Implementation Rules. 706 F.3d 428 (D.C. Cir. 2013). Prior to the Court's decision, and continuously since 2005, the EPA had implemented the 1997 and 2006 $PM_{2.5}$ NAAQS pursuant to regulations and guidance [1] that were based on the general implementation provisions of subpart 1 of Part D of Title I of the CAA. The Court found that the EPA erred in implementing the 1997 $PM_{2.5}$ NAAQS solely pursuant to subpart 1 of Part D of Title I of the CAA, without consideration of the particulate matter-specific provisions of subpart 4 of Part D. In this proposed rulemaking, the EPA takes additional steps to respond to the Court's remand,[2] and to address the implementation of the 1997 and 2006 $PM_{2.5}$ NAAQS under subpart 4. In light of the long history of implementation of these standards under subpart 1, the EPA's proposal seeks to integrate and harmonize ongoing implementation under subpart 1 with the subpart 4 requirements the Court has directed the EPA to address.

IV. Proposed Initial Identification of ''Moderate'' Classification for $PM_{2.5}$ Nonattainment Areas Under Subpart 4

Subpart 1 of Part D contains no nondiscretionary provision for classification of nonattainment areas, although it authorizes the EPA to make classifications if it considers such classification appropriate. As a result, under the EPA's prior approach to implementing the 1997 and 2006 $PM_{2.5}$ standards, the EPA did not identify any classifications for areas designated nonattainment for those standards. By contrast, subpart 4 of the CAA, section 188, provides that all areas designated nonattainment are initially classified ''by operation of law'' as ''moderate'' nonattainment areas, and they remain classified as moderate nonattainment areas unless and until the EPA later reclassifies them as serious nonattainment areas.[3] Pursuant to this provision, the EPA is proposing in this notice to identify the classification of all $PM_{2.5}$ areas currently designated nonattainment for the 1997 and 2006 NAAQS as ''moderate.'' Thus the provisions of subpart 4 relevant to areas currently designated nonattainment for 1997 and/or 2006 $PM_{2.5}$ NAAQS would initially be those applicable to moderate areas. For more information on current nonattainment areas, s*ee* 1997 $PM_{2.5}$ Nonattainment Areas, *http://www.epa.gov/oaqps001/greenbk/*

[1] ''Implementation Guidance for the 2006 24-Hour Fine Particle ($PM_{2.5}$) National Ambient Air Quality Standards (NAAQS),'' from Stephen D. Page, Director, Office of Air Quality Planning and Standards, to Regional Air Directors, Region I–X, March 2, 2012. This guidance was withdrawn on June 6, 2013.

[2] The EPA has previously addressed the NRDC decision and the role of subpart 4 in $PM_{2.5}$ implementation in numerous rulemakings on individual areas. See areas listed in footnote 4, below.

[3] In the General Preamble, the EPA has previously addressed the requirements of section 188 concerning classifications under subpart 4, including the issue of discretionary and mandatory reclassification from moderate to serious. *See* 57 FR 13498, at 13537–8.

qnc.html and 2006 $PM_{2.5}$ Nonattainment Areas, *http://www.epa.gov/oaqps001/greenbk/rnc.html.*

The areas that are most clearly affected by this rule are areas that did not submit a SIP under subpart 1 and which do not have a clean data determination or which have not yet submitted a redesignation request. The states and specific nonattainment areas affected for the $PM_{2.5}$ 1997 areas are Libby, MT, San Joaquin Valley, CA and the Los Angeles-South Coast Air Basin, CA. For the 2006 $PM_{2.5}$ nonattainment areas, the states and specific nonattainment areas affected are Fairbanks, AK, Imperial County, CA, Liberty-Clairton, PA, Provo, UT and Salt Lake City, UT.

The subpart 4 requirements for areas classified as moderate are generally comparable to those of subpart 1. The general provisions for requirements for all nonattainment areas for subpart 4 include: (1) Section 189 (a)(1)(A) (NSR permit program); (2) section 189 (a)(1)(B) (attainment demonstration); (3) section 189 (a)(1)(C) [reasonably available control measures (RACM) and reasonable available control technology (RACT)]; (4) section 189 (c) [request for proposals (RFP) and quantitative milestones]; and (5) section 189 (e) (precursor requirements for major stationary sources). Subpart 4 also includes additional statutory SIP planning requirements in the event that EPA reclassifies a moderate nonattainment area to a serious nonattainment area and in the event the area needs additional extensions of time to attain the NAAQS. The General Preamble and Addendum provide useful additional guidance on the specific subpart 4 statutory requirements.

V. Proposed Deadlines for Submission of Remaining Required Attainment-Related SIP Elements

In 2013, the D.C. Circuit Court in *NRDC* v. *EPA* directed the EPA to modify its regulatory approach to implementing the 1997 $PM_{2.5}$ standard solely under subpart 1. The EPA's subpart 1-based rulemakings were issued in 2007 and 2008, and for more than 5 years they have governed the EPA's and the states' implementation efforts. Prior to the Court's decision, states understandably have worked towards meeting the air quality goals of the 1997 and 2006 standards in accordance with the EPA regulations and guidance derived from subpart 1. During this time, many $PM_{2.5}$ nonattainment areas have attained the 1997 and 2006 $PM_{2.5}$ standards and/or submitted SIPs aimed at attainment, including, among other requirements, nonattainment NSR permitting programs. The EPA must therefore respond to the Court's remand in the context of the states' prior and ongoing efforts to attain the standards under the framework of subpart 1. The EPA takes this history into account in proposing to set a new deadline for any remaining submissions that may be required for a moderate nonattainment area due to the applicability of subpart 4. It is important for EPA to set a new deadline in order to give states the opportunity to address the interpretation announced by the Court earlier this year. In rulemakings on individual areas subsequent to the Court's decision, the EPA has explained in detail its view that the Court's recently announced interpretation should not be applied retroactively. *See,* for example, ''Approval and Promulgation of Air Quality Implementation Plans; Indiana; Redesignation of the Indianapolis Area to Attainment of the 1997 Annual Standard for Fine Particulate Matter'' (78 FR 20856, April 8, 2013—proposal), (78 FR 41698, July 11, 2013—final). The EPA has continued to consider and act upon submissions already made, explaining in those individual rulemakings how the EPA has taken into account the NRDC Court's decision.[4] Notwithstanding those actions, there are areas for which states are required to make additional submissions under subparts 1 and 4. With respect to those areas the EPA believes that states should be provided a reasonable opportunity to make such submissions based on the EPA interactions with states regarding the implementation of the $PM_{2.5}$ NAAQS for the areas likely to be most affected by this rule, we anticipate that establishing a clear submittal date would help support NAAQS implementation and that approximately 1 year would provide an additional amount of time for development of any additional SIP submittal for these areas if needed.

The EPA is therefore proposing to set a deadline of December 31, 2014, for the states to submit any additional attainment-related SIP elements that may be needed to meet the applicable requirements of subpart 4 for areas currently designated nonattainment for the 1997 and/or 2006 $PM_{2.5}$ NAAQS, and to submit SIPs addressing the nonattainment NSR requirements in subpart 4. The EPA believes that this period provides a relatively brief but reasonable amount of time for states to ascertain whether and to what extent any additional submissions are needed for a particular 1997 or 2006 $PM_{2.5}$ nonattainment area,[5] and to develop, adopt and submit any such SIPs. Section 188(c)(1) of Subpart 4 establishes an attainment deadline of no later than the end of the sixth calendar year after designation as nonattainment. With respect to the 2006 24-hour $PM_{2.5}$ NAAQS, nonattainment area designations for most areas became effective in December 2009 (74 FR 58688, November 13, 2009). Thus, these areas are subject to an attainment deadline under subpart 4 of no later than December 31, 2015. A SIP submission deadline of December 31, 2014, for these areas will therefore ensure that there is at least a year between SIP submission and attainment deadlines.[6] The December 31, 2014,

[4] In addition to the Indianapolis redesignation, since the NRDC Court's decision, the EPA has considered the role of subpart 4 in $PM_{2.5}$ implementation in a number of other individual rulemakings: ''Redesignation of Ohio Portions of Parkersburg-Marietta and Wheeling Areas to Attainment of the 1997 Annual Standard for Fine Particulate Matter'' (78 FR 53275, August 29, 2013), ''Redesignation of the Detroit-Ann Arbor Area to Attainment of the 1997 and 2006 Standards for Fine Particulate Matter'' (78 FR 53272, August 29, 2013), ''Redesignation of the Cleveland-Akron-Lorain Area for the 1997 Annual and 2006 24-Hour Standards'' (78 FR 57270, September 18, 2013), ''Redesignation of Ohio Portion of the Steubenville-Weirton Area for the 1997 Annual and 2006 24-Hour Standards'' (78 FR 57273, September 18, 2013), ''Redesignation of Dayton-Springfield, OH Nonattainment Area for 1997 PM-2.5'' (78 FR 59258, September 26, 2013), ''Redesignation of Canton-Massillon OH Nonattainment Area for 1997 PM-2.5'' (78 FR 62459, October 22, 2013), and ''Proposed Approval of Delaware Attainment Plan for the Delaware Portion of the Philadelphia-Wilmington, Pennsylvania-New Jersey-Delaware Nonattainment Area for the 1997 Annual Fine Particulate Matter Standard'' (78 FR 57573, September 19, 2013).

[5] The answers to these questions will depend upon the circumstances of each individual nonattainment area, including whether the area's monitored air quality meets the standard, and whether the state has already made attainment-related and NSR SIP submissions for the area. As the EPA has explained in its proposed rulemaking on Approval and Promulgation of Air Quality Implementation Plans; Indiana; Redesignation of the Indianapolis Area to Attainment of the 1997 Annual Standard for Fine Particulate Matter (78 FR 20856, April 8, 2013), it is also important to evaluate, for each area, the interrelationship of the two subparts, and whether the substance of subpart 1 and subpart 4 provisions, should, for certain purposes, be considered equivalent.

[6] The EPA designation for the West Central Pinal area in Arizona as nonattainment for the 2006 24-hour $PM_{2.5}$ standard became effective March 7, 2011. *See* 76 FR 6056, February 3, 2011. Although the latest attainment date applicable to this area under subpart 4 is December 31, 2017 (2 years later than the December 31, 2015, attainment date that applies to areas designated nonattainment in 2009), the EPA is proposing to require Arizona to submit an attainment SIP meeting the requirements of subpart 4 for the 2006 24-hour $PM_{2.5}$ standard for this area by the same December 31, 2014, date that we are proposing for other nonattainment areas. The December 31, 2014, SIP submission date would supplant the March 7, 2014, date by which the state was previously required under subpart 1 to submit

Continued

deadline would allow a brief but reasonable amount of time for the states to modify their SIPs in consideration of subpart 4 in keeping with the timeframe established by the existing subpart 4 attainment deadline. With respect to the 1997 Annual $PM_{2.5}$ NAAQS, although nonattainment area designations in most areas became effective more than 8 years ago (*see* 70 FR 944, January 5, 2005), we are proposing to establish for these areas the same subpart 4 SIP submission deadline that would apply for purposes of the 2006 $PM_{2.5}$ NAAQS (December 31, 2014), so that all states with $PM_{2.5}$ nonattainment areas have a reasonable amount of time to develop any additional SIP elements that may be required under subpart 4 in response to the NRDC decision. Thus, for all $PM_{2.5}$ nonattainment areas, the states would be required to submit any remaining attainment-related SIPs that are necessary to satisfy the requirements applicable to moderate nonattainment areas under section 189(a) of the Act no later than December 31, 2014. This proposal does not affect any action that the EPA has previously taken under section 110(k) of the Act on a SIP for a $PM_{2.5}$ nonattainment area. As noted in the section below, because subpart 4 incorporates the requirements of subpart 1 and affects the requirements that it subsumes, the EPA is proposing that the December 31, 2014, deadline replaces the deadlines previously set for submissions designed solely for subpart 1. By coordinating implementation of subpart 4 and subpart 1 submissions, and clarifying the deadline for submission of additional subpart 4 requirements, the proposed rule will help states and areas understand and efficiently discharge any remaining responsibilities. The proposed rule will also facilitate the processing of requests to redesignate 1997 and 2006 nonattainment areas to attainment, since clear deadlines for submissions of requirements will provide a means for identifying applicable requirements for purposes evaluating redesignation requests.[7]

VI. What guidance is currently available to States regarding subpart 4 requirements?

The EPA has longstanding general guidance that interprets the 1990 amendments to the CAA, making recommendations to states for meeting the statutory requirements for SIPs for nonattainment areas. *See* ''State Implementation Plans; General Preamble for the Implementation of Title I of the Clear Air Act Amendments of 1990'' (57 FR 13498, April 16, 1992) (the ''General Preamble''). In the General Preamble, the EPA discussed the relationship of subpart 1 and subpart 4 SIP requirements, and pointed out that subpart 1 requirements were to an extent ''subsumed by, or integrally related to, the more specific PM–10 requirements.'' 57 FR at 13538. In recent rulemakings for individual areas published after the *NRDC* Court decision, the EPA has further elaborated on the relationship of subpart 1 and subpart 4 requirements in the context of an area that has attained the 1997 $PM_{2.5}$ standard and requested redesignation to attainment. ''Approval and Promulgation of Air Quality Implementation Plans; Indiana; Redesignation of the Indianapolis Area to Attainment of the 1997 Annual Standard for Fine Particulate Matter'' (78 FR 20856, April 8, 2013—proposal) (78 FR 41698, July 11, 2013—final). The EPA believes that both the General Preamble and its recent rulemakings on Indianapolis and other areas provide helpful guidance for states in ascertaining the impact of subpart 4 requirements on their ongoing efforts to meet the 1997 and 2006 $PM_{2.5}$ standards.[8] For help with questions or further clarification, states should consult their respective EPA regional offices.

VII. Proposed Actions

This rule responds to the Court's decision in *NRDC* v. *EPA,* supra. The Court found that the EPA erred in implementing the 1997 $PM_{2.5}$ NAAQS pursuant solely to the general implementation provisions of subpart 1 of Part D of Title I of the CAA, without also considering the particulate matter-specific provisions of subpart 4 of Part D. The EPA proposes to identify the initial classification of current 1997 and 2006 $PM_{2.5}$ nonattainment areas as moderate. For these areas, the EPA is also proposing to set December 31, 2014, as the deadline for any remaining required attainment-related and nonattainment NSR SIP submissions, pursuant to and considering the application of subpart 4. The EPA is soliciting comment, specifically on the proposed deadlines for submission of remaining SIP requirements.

There are two main categories of areas most affected by this rule: (1) Areas that did not submit a SIP under subpart 1 and (2) areas which do not have a clean data determination or which have not yet submitted a redesignation request. The states and specific nonattainment areas affected for the 1997 $PM_{2.5}$ NAAQS are Libby, MT, San Joaquin Valley, CA and the Los Angeles-South Coast Air Basin, CA. For the 2006 $PM_{2.5}$ NAAQS, the states and specific nonattainment areas affected are Fairbanks, AK, Imperial County, CA, Liberty-Clairton, PA, Provo, UT and Salt Lake City, UT. Using the most up to date status of SIP submissions and approved SIPs, the EPA will continue working with states on a case-by-case basis, based on their stage of SIP development, to address subpart 4 requirements.

VIII. Statutory and Executive Order Reviews

A. Executive Order 12866: Regulatory Planning and Review and Executive Order 13563: Improving Regulation and Regulatory Review

This action is not a ''significant regulatory action'' under the terms of Executive Order 12866 (58 FR 51735, October 4, 1993) and is therefore not subject to review under Executive Orders 12866 and 13563 (76 FR 3821, January 21, 2011).

B. Paperwork Reduction Act

This action does not impose an information collection burden under the provisions of the *Paperwork Reduction Act,* 44 U.S.C. 3501 *et seq.* Burden is defined at 5 CFR 1320.3(b). This proposed rulemaking identifies the classification under subpart 4 for areas currently designated nonattainment for the 1997 and/or 2006 $PM_{2.5}$ standards and the deadline for states to submit attainment-related SIP elements for these areas that are required pursuant to subpart 4.

a $PM_{2.5}$ attainment SIP for this area, and would provide a reasonable amount of additional time for the state to both develop the required subpart 4 SIP elements and implement its control strategy in advance of the applicable attainment date.

[7] As explained in the EPA's proposed redesignation of the Indianapolis Area to Attainment for the 1997 $PM_{2.5}$ Standard, in evaluating redesignation requests, the EPA's longstanding interpretation is that ''applicable requirements'' are those whose deadline for submission occurs prior to the state's submission of a complete redesignation request. 78 FR 20856, 20861.

[8] *See* also ''Redesignation of Ohio Portions of Parkersburg-Marietta and Wheeling Areas to Attainment of the 1997 Annual Standard for Fine Particulate Matter'' (78 FR 53275, August 29, 2013), ''Redesignation of the Detroit-Ann Arbor Area to Attainment of the 1997 and 2006 Standards for Fine Particulate Matter'' (78 FR 53272, August 29, 2013); ''Redesignation of the Cleveland-Akron-Lorain Area for the 1997 Annual and 2006 24-Hour Standards'' (78 FR 57270, September 18, 2013), ''Redesignation of Ohio Portion of the Steubenville-Weirton Area for the 1997 Annual and 2006 24-Hour Standards'' (78 FR 57273, September 18, 2013), ''Redesignation of Dayton-Springfield, OH Nonattainment Area for 1997 PM-2.5'' (78 FR 59258, September 26, 2013).

C. Regulatory Flexibility Act

The Regulatory Flexibility Act (RFA) generally requires an agency to prepare a regulatory flexibility analysis of any regulation subject to notice and comment rulemaking requirements under the Administrative Procedures Act or any other statute unless the agency certifies the rule will not have a significant economic impact on a substantial number of small entities. Small entities include small businesses, small organizations and small governmental jurisdictions.

For purposes of assessing the impacts of this rule on small entities, small entity is defined as: (1) A small business as defined in the Small Business Administration's (SBA) regulations at 13 CFR 121.201;) (2) a small governmental jurisdiction that is a government of a city, county, town, school district or special district with a population of less than 50,000; and (3) a small organization that is any not-for-profit enterprise which is independently owned and operated and is not dominant in its field.

After considering the economic impacts of this proposed rule on small entities, I certify that this action will not have a significant economic impact on a substantial number of small entities. This proposed rule will not impose any requirements directly on small entities. Entities potentially affected directly by this proposal include state, local and tribal governments and none of these governments are small governments. Other types of small entities are not directly subject to the requirements of this rule because this action only identifies the classification under subpart 4 for areas currently designated nonattainment for the 1997 and/or 2006 $PM_{2.5}$ standards and the deadline for states to submit attainment-related SIP elements for these areas that are required pursuant to subpart 4.

We continue to be interested in the potential impacts of the proposed rule on small entities and welcome comments on issues related to such impacts.

D. Unfunded Mandates Reform Act

This action contains no federal mandate under the provisions of title II of the Unfunded Mandates Reform Act of 1995 (UMRA), 2 U.S.C. 1531–1538 for state, local and tribal governments, in the aggregate, or the private sector. This action imposes no enforceable duty on any state, local or tribal governments or the private sector. Therefore, this action is not subject to the requirements of section 202 and 205 of the UMRA.

This action is also not subject to the requirements of section 203 of the UMRA because it contains no regulatory requirements that might significantly or uniquely affect small governments. This proposed rulemaking identifies the classification under subpart 4 for areas currently designated nonattainment for the 1997 and/or 2006 $PM_{2.5}$ standards and the deadline for states to submit attainment-related SIP elements for these areas that are required pursuant to subpart 4.

E. Executive Order 13132: Federalism

This action does not have federalism implications. It will not have substantial direct effects on the states, on the relationship between the national government and the states, or on the distribution of power and responsibilities among the various levels of government, as specified in Executive Order 13132. The requirement to submit SIP revisions to meet the 1997 and 2006 $PM_{2.5}$ NAAQS requirements under subpart 4 is imposed by the CAA. This proposed rule, if made final, would interpret those requirements as they apply to the 1997 and 2006 $PM_{2.5}$ NAAQS. Thus, Executive Order 13132 does not apply to this action.

In the spirit of Executive Order 13132 and consistent with the EPA policy to promote communications between the EPA and state and local governments, the EPA specifically solicits comments on this proposed action from state and local officials.

F. Executive Order 13175: Consultation and Coordination With Indian Tribal Governments

This action does not have tribal implications, as specified in Executive Order 13175 (65 FR 67249, November 9, 2000). It would not have a substantial direct effect on one or more Indian tribes, since no tribe has to develop an implementation plan under these proposed regulatory revisions. Furthermore, these proposed regulation revisions do not affect the relationship or distribution of power and responsibilities between the federal government and Indian tribes. The CAA and the Tribal Air Rule establish the relationship of the federal government and tribes in developing plans to attain the NAAQS, and these revisions to the regulations do nothing to modify that relationship. Thus, Executive Order 13175 does not apply to this action.

Although Executive Order 13175 does not apply to this action, the EPA specifically solicits additional comment on this proposed action from tribal officials.

G. Executive Order 13045: Protection of Children From Environmental Health and Safety Risks

The EPA interprets E.O. 13045 (62 FR 19885, April 23, 1997) as applying only to those regulatory actions that concern health or safety risks, such that the analysis required under section 5–501 of the E.O. has the potential to influence the regulation. This action is not subject to E.O. 13045 because it does not establish an environmental standard intended to mitigate health or safety risks. This proposed rulemaking identifies the classification under subpart 4 for areas currently designated nonattainment for the 1997 and/or 2006 $PM_{2.5}$ standards and the deadline for states to submit attainment-related SIP elements for these areas that are required pursuant to subpart 4.

H. Executive Order 13211: Actions Concerning Regulations That Significantly Affect Energy Supply, Distribution, or Use

This action is not subject to Executive Order 13211 (66 FR 28355 (May 22, 2001)), because it is not a significant regulatory action under Executive Order 12866.

I. National Technology Transfer and Advancement Act

Section 12(d) of the National Technology Transfer and Advancement Act of 1995 (NTTAA), Public Law No. 104–113, section 12(d) (15 U.S.C. 272 note) directs the EPA to use voluntary consensus standards in its regulatory activities unless to do so would be inconsistent with applicable law or otherwise impractical. Voluntary consensus standards are technical standards (e.g., materials specifications, test methods, sampling procedures and business practices) that are developed or adopted by voluntary consensus standards bodies. NTTAA directs the EPA to provide Congress, through OMB, explanations when the agency decides not to use available and applicable voluntary consensus standards.

This action does not involve technical standards. Therefore, the EPA is not considering the use of any voluntary consensus standards.

J. Executive Order 12898: Federal Actions To Address Environmental Justice in Minority Populations and Low-Income Populations

Executive Order (E.O.) 12898 (59 FR 7629 (Feb. 16, 1994)) establishes federal executive policy on environmental justice. Its main provision directs federal agencies, to the greatest extent practicable and permitted by law, to make environmental justice part of their

mission by identifying and addressing, as appropriate, disproportionately high and adverse human health or environmental effects of their programs, policies and activities on minority populations and low-income populations in the United States.

The EPA has determined that this action will not have disproportionately high and adverse human health or environmental effects on minority or low-income populations because it does not affect the level of protection provided to human health or the environment. This proposed rulemaking identifies the classification under subpart 4 for areas currently designated nonattainment for the 1997 and/or 2006 $PM_{2.5}$ standards and the deadline for states to submit attainment-related SIP elements for these areas that are required pursuant to subpart 4.

Statutory Authority

The statutory authority for this action is provided by 42 U.S.C. 7401, 7408, 7410, 7501–7509a, and 7601(a)(1).

List of Subjects in 40 CFR Part 51

Environmental protection, Administrative practice and procedure, Air pollution control, Intergovernmental relations, Nitrogen dioxide, Ozone, Particulate matter, Sulfur oxides, Volatile organic compound.

Dated: November 15, 2013.

Gina McCarthy,

Administrator.

[FR Doc. 2013–27992 Filed 11–20–13; 8:45 am]

BILLING CODE 6560–50–P

ENVIRONMENTAL PROTECTION AGENCY

40 CFR Parts 52

[EPA–R06–OAR–2006–0593; FRL–9902–99–Region 6]

Approval and Promulgation of Implementation Plans; Texas; Control of Air Pollution by Permits for New Construction or Modification; Permits for Specific Designated Facilities

AGENCY: Environmental Protection Agency (EPA).

ACTION: Proposed rule.

SUMMARY: EPA is proposing to approve portions of two revisions to the Texas State Implementation Plan (SIP) concerning the Permits for Specific Designated Facilities Program, also referred to as the FutureGen Program. EPA has determined that the portions of these SIP revisions specific to the FutureGen Program submitted on March 9, 2006 and July 2, 2010, comply with the Clean Air Act and EPA regulations and are consistent with EPA policies. This action is being taken under section 110 and parts C and D of the Act.

DATES: Comments must be received on or before December 23, 2013.

ADDRESSES: Comments may be mailed to Ms. Adina Wiley, Air Permits Section (6PD–R), Environmental Protection Agency, 1445 Ross Avenue, Suite 1200, Dallas, Texas 75202–2733. Comments may also be submitted electronically or through hand delivery/courier by following the detailed instructions in the Addresses section of the direct final rule located in the rules section of this **Federal Register**.

FOR FURTHER INFORMATION CONTACT: Ms. Adina Wiley, Air Permits Section (6PD–R), Environmental Protection Agency, Region 6, 1445 Ross Avenue, Suite 1200, Dallas, Texas 75202–2733, telephone (214) 665–2115; fax number (214) 665–6762; email address *wiley.adina@epa.gov*.

SUPPLEMENTARY INFORMATION: In the final rules section of this **Federal Register**, EPA is approving the State's SIP submittal as a direct final rule without prior proposal because the Agency views this as a noncontroversial submittal and anticipates no adverse comments. A detailed rationale for the approval is set forth in the direct final rule. If no relevant adverse comments are received in response to this action, no further activity is contemplated. If EPA receives relevant adverse comments, the direct final rule will be withdrawn and all public comments received will be addressed in a subsequent final rule based on this proposed rule. EPA will not institute a second comment period. Any parties interested in commenting on this action should do so at this time. Please note that if EPA receives adverse comment on an amendment, paragraph, or section of this rule and if that provision may be severed from the remainder of the rule, EPA may adopt as final those provisions of the rule that are not the subject of an adverse comment.

For additional information, see the direct final rule which is located in the rules section of this **Federal Register**.

Dated: November 1, 2013.

Ron Curry,

Regional Administrator, Region 6.

[FR Doc. 2013–27573 Filed 11–20–13; 8:45 am]

BILLING CODE 6560–50–P

DEPARTMENT OF DEFENSE

GENERAL SERVICES ADMINISTRATION

NATIONAL AERONAUTICS AND SPACE ADMINISTRATION

48 CFR Parts 1, 2, 9, 12, 22, and 52

[FAR Case 2013–001; Docket 2013–0001, Sequence 1]

RIN 9000–AM55

Federal Acquisition Regulation; Ending Trafficking in Persons; Extension of Time for Comments

AGENCY: Department of Defense (DoD), General Services Administration (GSA), and National Aeronautics and Space Administration (NASA).

ACTION: Proposed rule; extension of comment period.

SUMMARY: DoD, GSA, and NASA issued a proposed rule on September 26, 2013, amending the Federal Acquisition Regulation (FAR) to strengthen protections against trafficking in persons in Federal contracts. These changes are intended to implement E.O. 13627 and Title XVII of the National Defense Authorization Act for Fiscal Year 2013. The comment period is being extended to provide additional time for interested parties to provide comments for FAR Case 2013–001, Ending Trafficking in Persons, to December 20, 2013.

DATES: For the proposed rule published on September 26, 2013 (78 FR 59317), submit comments by December 20, 2013.

ADDRESSES: Submit comments in response to FAR Case 2013–001 by any of the following methods:

- *Regulations.gov: http://www.regulations.gov.* Submit comments via the Federal eRulemaking portal by entering ''FAR Case 2013–001'' under the heading ''Enter Keyword or ID'' and selecting ''Search''. Select the link ''Submit a Comment'' that corresponds with ''FAR Case 2013–001''. Follow the instructions provided at the ''Submit a Comment'' screen. Please include your name, company name (if any), and ''FAR Case 2013–001'' on your attached document.
- *Fax:* 202–501–4067.
- *Mail:* General Services Administration, Regulatory Secretariat (MVCB), ATTN: Hada Flowers, 1800 F Street NW., 2nd Floor, Washington, DC 20405.

Instructions: Please submit comments only and cite ''FAR Case 2013–001'' in all correspondence related to this case.

All comments received will be posted without change to *http://www.regulations.gov*, including any personal and/or business confidential information provided.

FOR FURTHER INFORMATION CONTACT: Ms. Marissa Petrusek, Procurement Analyst, at 202–501–0136 for clarification of content. For information pertaining to status or publication schedules, contact the Regulatory Secretariat at 202–501–4755. Please cite FAR Case 2013–001.

SUPPLEMENTARY INFORMATION:

I. Background

DoD, GSA, and NASA published a proposed rule in the **Federal Register** at 78 FR 59317, September 26, 2013. The comment period is extended to provide additional time for interested parties to submit comments on the FAR case until December 20, 2013.

List of Subjects in 48 CFR Parts 1, 2, 9, 12, 22, and 52

Government procurement.

Dated: November 15, 2013.

William Clark,

Acting Director, Office of Government-wide Acquisition Policy, Office of Acquisition Policy, Office of Government-wide Policy.

[FR Doc. 2013–27878 Filed 11–20–13; 8:45 am]

BILLING CODE 6820–EP–P

Notices

Federal Register

Vol. 78, No. 225

Thursday, November 21, 2013

This section of the FEDERAL REGISTER contains documents other than rules or proposed rules that are applicable to the public. Notices of hearings and investigations, committee meetings, agency decisions and rulings, delegations of authority, filing of petitions and applications and agency statements of organization and functions are examples of documents appearing in this section.

DEPARTMENT OF AGRICULTURE

Forest Service

Revision of the Land Management Plan for El Yunque National Forest

AGENCY: Forest Service, USDA.

ACTION: Notice of Initiating the development of a land management plan revision for El Yunque National Forest.

SUMMARY: El Yunque National Forest, located in Puerto Rico, is initiating the development of a land management plan revision (forest plan) for El Yunque National Forest (NF). A Draft Assessment is being posted to our Web site. We are inviting the public to help us develop a preliminary ''need for change'' and a proposed action for the land management plan revision.

DATES: A draft of the Assessment report for the revision of El Yunque NF land management plan will be posted on the following Web site at *www.fs.usda.gov/elyunque* by November 30, 2013.

Public meetings associated with the development of the preliminary ''need for change'' and a proposed action will be announced on the Web site cited above.

It is anticipated that the Notice of Intent to prepare an environmental impact statement (which will accompany the land management plan revision for El Yunque NF), will be published in the **Federal Register** around March to April 2014.

ADDRESSES: Written comments or questions concerning this notice should be addressed to U.S. Forest Service, El Yunque National Forest, HC–01 Box 13490, Rio Grande, Puerto Rico, 00745–9625. Comments or questions may also be sent via email to *comments elyunqueplan@fs.fed.us.* All correspondence, including names and addresses when provided, are placed in the record and are available for public inspection and copying.

FOR FURTHER INFORMATION CONTACT: Pedro Rios, Forest Planning Team Leader, at 787–888–1880. Individuals who use telecommunication devices for the deaf (TDD) may call the Federal Information Relay Service (FIRS) at 1–800–877–8339 between 8:00 a.m. and 8:00 p.m. (Eastern time), Monday through Friday.

More information on the planning process can also be found on the El Yunque National Forest Web site at *www.fs.usda.gov/elyunque.*

SUPPLEMENTARY INFORMATION: Pursuant to the 2012 Forest Planning Rule (36 CFR part 219), the planning process encompases three-stages: Assessment, plan revision, and monitoring. The first stage of the planning process involves assessing social, economic, and ecological conditions of the planning area, which is documented in an assessment report. A draft of the assessment report for El Yunque NF is being completed and will be available by November 30, 2013 on the Forest Web site at: *www.fs.usda.gov/elyunque.*

This notice announces the start of the second stage of the planning process, which is the development of the land management plan revision. The first task of plan revision is to develop a preliminary ''need for change'', which identifies the need to change management direction in current plans due to changing conditions or other monitoring information. The next task is to develop a proposed action, which is a proposal on how to respond to needs for changes. We are inviting the public to help us develop our preliminary ''need for change'' and a proposed action.

A proposed action will initiate our compliance with the National Environmental Policy Act. A Notice of Intent to prepare an environmental impact statement for the land mangement plan revision, which will include a description of the preliminary need for change and a description of the proposed action, will be published around March to April 2014 in the **Federal Register**.

Forest plans developed under the National Forest Management Act (NFMA) of 1976 describe the strategic direction for management of forest resources for ten to fifteen years, and are adaptive and amendable as conditions changes over time. The Forest Plan for El Yunque NF was approved in 1997. On August 9, 2012, a public announcement was made that El Yunque NF was beginning to work on the Assessment for revising their Forest Plan. This notice announces the start of the second stage of the planning process, the development of the land management plan revision. The third stage of the planning process is the monitoring and evaluation of the revised plan, which is ongoing over the life of the revised plan.

As public meetings, other opportunities for public engagement, and public review and comment opportunties are identified to assist with the development of the forest plan revision, public announcements will be made, notifications will be posted on the Forest's Web site at *www.fs.usda.gov/elyunque* and information will be sent out to the Forest's mailing list. If anyone is interested in being on the Forest's mailing list to receive these notifications, please contact Pedro Rios, Forest Planning Team Leader, at the address identified above, or by sending an email to *commentselyunqueplan@fs.fed.us.*

Responsible Official

The responsible official for the revision of the land management plan for El Yunque National Forest is Pablo Cruz, Forest Supervisor, El Yunque National Forests, HC–01 Box 13490, Rio Grande, Puerto Rico, 00745–9625.

Dated: November 1, 2013.

Pablo Cruz,

Forest Supervisor.

[FR Doc. 2013–27930 Filed 11–20–13; 8:45 am]

BILLING CODE 3410–11–P

DEPARTMENT OF COMMERCE

Census Bureau

Proposed Information Collection; Comment Request; Questionnaire for Building Permit Official

AGENCY: U.S. Census Bureau.

ACTION: Notice.

SUMMARY: The Department of Commerce, as part of its continuing effort to reduce paperwork and respondent burden, invites the general public and other Federal agencies to take this opportunity to comment on proposed and/or continuing information

collections, as required by the Paperwork Reduction Act of 1995, Public Law 104–13 (44 U.S.C. 3506(c)(2)(A)).

DATES: To ensure consideration, written comments must be submitted on or before January 21, 2014.

ADDRESSES: Direct all written comments to Jennifer Jessup, Departmental Paperwork Clearance Officer, Department of Commerce, Room 6616, 14th and Constitution Avenue NW., Washington, DC 20230 (or via the Internet at *jjessup@doc.gov*).

FOR FURTHER INFORMATION CONTACT: Requests for additional information or copies of the information collection instrument(s) and instructions should be directed to Erica Filipek, U.S. Census Bureau, MCD, CENHQ Room 7K057, 4600 Silver Hill Road, Washington, DC 20233, telephone (301)763–5161 (or via the Internet at *Erica.Mary.Filipek@census.gov*).

SUPPLEMENTARY INFORMATION:

I. Abstract

The U.S. Census Bureau plans to request an extension of the current Office of Management and Budget (OMB) clearance of the Questionnaire for Building Permit Official (SOC–QBPO). The Census Bureau uses the Computer-Assisted Personal Interviewing (CAPI) electronic questionnaire SOC–QBPO to collect information from state and local building permit officials on: (1) The types of permits they issue, (2) the length of time a permit is valid, (3) how they store permits, and (4) the geographic coverage of the permit system. We need this information to carry out the sampling for the Survey of Housing Starts, Sales, and Completions (OMB number 0607–0110), also known as Survey of Construction (SOC). The SOC provides widely used measures of construction activity, including the economic indicators Housing Starts, Housing Completions, and New Housing Sales.

The current clearance of SOC–QBPO is scheduled to expire on May 31, 2014. We will continue to use the current CAPI questionnaire without any revisions and are requesting approval of continual use of the existing questionnaire in the field. There are no revisions to the current questionnaire. The overall length of the interview and the sample size also will not change.

II. Method of Collection

The Census Bureau uses its field representatives to obtain information on the operating procedures of a permit office using the SOC–QBPO. The field representative visits the permit office, conducts the interview, and completes this electronic form.

III. Data

OMB Control Number: 0607–0125.

Form Number: SOC–QBPO.

Type of Review: Regular submission.

Affected Public: State and local Government.

Estimated Number of Respondents: 900.

Estimated Time per Response: 15 minutes.

Estimated Total Annual Burden Hours: 225 hours.

Estimated Total Annual Cost: The cost to the respondents is estimated to be $5,418 based on an average hourly salary of $24.08 for local government employees. This estimate was taken from the Census Bureau's Annual Survey of Government Employment for 2011.

Respondent's Obligation: Voluntary.

Legal Authority: Title 13, U.S.C., Section 182.

IV. Request for Comments

Comments are invited on: (a) Whether the proposed collection of information is necessary for the proper performance of the functions of the agency, including whether the information shall have practical utility; (b) the accuracy of the agency's estimate of the burden (including hours and cost) of the proposed collection of information; (c) ways to enhance the quality, utility, and clarity of the information to be collected; and (d) ways to minimize the burden of the collection of information on respondents, including through the use of automated collection techniques or other forms of information technology.

Comments submitted in response to this notice will be summarized and/or included in the request for OMB approval of this information collection; they also will become a matter of public record.

Dated: November 15, 2013.

Glenna Mickelson,

Management Analyst, Office of the Chief Information Officer.

[FR Doc. 2013–27868 Filed 11–20–13; 8:45 am]

BILLING CODE 3510–07–P

DEPARTMENT OF COMMERCE

Foreign-Trade Zones Board

[B–97–2013]

Foreign-Trade Zone (FTZ) 3—San Francisco, CA; Notification of Proposed Production Activity, Phillips 66 Company, (Oil Refining/Blending), Rodeo, California

The San Francisco Port Commission, grantee of FTZ 3, submitted a notification of proposed production activity to the FTZ Board on behalf of Phillips 66 Company (Phillips 66), located in Rodeo, California. The notification conforming to the requirements of the regulations of the FTZ Board (15 CFR 400.22) was received on November 12, 2013.

A separate application for subzone status at the Phillips 66 facility was submitted and is being processed under Section 400.31 of the FTZ Board's regulations (B–89–2013, 78 FR 64196, 10/28/2013). The facility is used for refining crude and intermediate oils into fuels, gases, petrochemicals, and by-products. Phillips 66 also blends purchased petroleum products, such as gasoline, alkylates, biodiesel, renewable diesel, and additives, with products produced at the refinery. Pursuant to 15 CFR 400.14(b), FTZ activity would be limited to the specific foreign-status materials and components and specific finished products listed in the submitted notification (as described below) and subsequently authorized by the FTZ Board.

Phillips 66 has requested approval subject to the standard refinery restrictions and has indicated that it would either be admitting any foreign biodiesel in privileged-foreign (PF) status or filing a customs entry on foreign biodiesel prior to admission into the proposed FTZ. Production under FTZ procedures could exempt Phillips 66 from customs duty payments on foreign status inputs used in export production. On its domestic sales, Phillips 66 would be able to choose the duty rates during customs entry procedures that apply to: Motor gasoline; gasoline components for blending; alkylate; light distillates and light distillate blend stock (testing 25 degrees API or over); diesel; diesel blend stock (testing 25 degrees API or over); diesel containing biodiesel; Jet A fuel; benzene; toluene; xylenes; naphthalene; high aromatic mixtures; carbon black oil; methane/natural gas; refinery gases: Ethane, propane, and butanes, and mixtures of such gases; liquefied refinery gas: Propane, iso-butane, and mixed butane; ethylene;

propylene; butylene; butadiene; buta-1,3-diene; ethane; mixtures such as propane-propylene mix; ethane-propane mix; hydrogen; sulfur; sulfuric acid; non-calcined coke, including green; calcined coke; asphalt; combined heavy unicrackate (light distillate from hydrocracker); combined U250 feed (ultra-low sulfur diesel); naphtha; pressure distillate (distillate oil with average gravity of 54.8); gas oil feed (FCC heavy gas oil; hydrocracker feed); recovered oil (heavy intermediates testing under 25 degrees API); recovered oil (light slop oil testing 25 degrees API or over); recovered gasoline slop; gas oil (testing under 25 degrees API); gas oil (testing 25 degrees API or over); U246 fluid catalytic cracker feed (low sulfur gas oil testing over 25 degrees API); U267 residual oil (heavy gas oil testing less than 20 degrees API); fuel oil (testing under 25 degrees API); and, prefractionator bottoms (testing approx. 10 degrees API; fuel oil) (duty rates range between duty-free and 52.5 cents per barrel or 3.7%) for the foreign status inputs noted below. Customs duties also could possibly be deferred or reduced on foreign status production equipment.

The components and materials sourced from abroad include: Crude oil (testing under, at, or above 25 degrees API); hydrocracker feed; decant oil (fuel oil; slurry oil; testing under 25 degrees API); alkylates; combined heavy unicrackate (light distillate from hydrocracker); combined U250 Feed (ULSD unit feed); naphtha, pressure distillate (distillate oil with average gravity of 54.8); biodiesel (B100); biodiesel other than B100; and renewable diesel (R100) (duty rates: 5.25 cents per barrel, 10.5 cents per barrel, 4.6% or 6.5%).

Public comment is invited from interested parties. Submissions shall be addressed to the FTZ Board's Executive Secretary at the address below. The closing period for their receipt is December 31, 2013.

A copy of the notification will be available for public inspection at the Office of the Executive Secretary, Foreign-Trade Zones Board, Room 21013, U.S. Department of Commerce, 1401 Constitution Avenue NW., Washington, DC 20230–0002, and in the ''Reading Room'' section of the FTZ Board's Web site, which is accessible via *www.trade.gov/ftz*.

For further information, contact Diane Finver at *Diane.Finver@trade.gov* or (202) 482–1367.

Dated: November 15, 2013.

Andrew McGilvray,

Executive Secretary.

[FR Doc. 2013–27975 Filed 11–20–13; 8:45 am]

BILLING CODE 3510–DS–P

DEPARTMENT OF COMMERCE

International Trade Administration

Proposed Information Collection; Comment Request; Request for Duty-Free Entry of Scientific Instrument or Apparatus

AGENCY: International Trade Administration, Commerce.

ACTION: Notice.

SUMMARY: The Department of Commerce, as part of its continuing effort to reduce paperwork and respondent burden, invites the general public and other Federal agencies to take this opportunity to comment on proposed and/or continuing information collections, as required by the Paperwork Reduction Act of 1995.

DATES: Written comments must be submitted on or before January 21, 2014.

ADDRESSES: Direct all written comments to Jennifer Jessup, Departmental Paperwork Clearance Officer, Department of Commerce, Room 6616, 14th and Constitution Avenue NW, Washington, DC 20230 (or via the Internet at *JJessup@doc.gov*).

FOR FURTHER INFORMATION CONTACT: Requests for additional information or copies of the information collection instrument and instructions should be directed to Charlie Michael, Import Policy Analyst, phone number 202–482–0596, or via the internet at *charles.michael@trade.gov.*

SUPPLEMENTARY INFORMATION:

I. Abstract

The Departments of Commerce and Homeland Security (DHS) are required to determine whether nonprofit institutions established for scientific or educational purposes are entitled to duty-free entry for scientific instruments the institutions import under the Florence Agreement. Form ITA–338P enables:

(1) DHS to determine whether the statutory eligibility requirements for the institution and the instrument are fulfilled, and (2) Commerce to make a comparison and finding as to the scientific equivalency of comparable instruments being manufactured in the United States. Without the collection of the information, DHS and Commerce would not have the necessary information to carry out the responsibilities of determining eligibility for duty-free entry assigned by law.

II. Method of Collection

A copy of Form ITA–338P is provided on and downloadable from a Web site at *http://enforcement.trade.gov/sips/sipsform/ita-338p.pdf* or the potential applicant may request a copy from the Department. The applicant completes the form and then forwards it via mail to DHS.

Upon acceptance by DHS as a valid application, the application is transmitted to Commerce for further processing.

III. Data

OMB Control Number: 0625–0037.

Form Number(s): ITA–338P.

Type of Review: Regular submission.

Affected Public: State or local government; Federal government; not for-profit institutions.

Estimated Number of Respondents: 65.

Estimated Time Per Response: 2 hours.

Estimated Total Annual Burden Hours: 130.

Estimated Total Annual Cost to Public: $2,138.

IV. Request for Comments

Comments are invited on: (a) Whether the proposed collection of information is necessary for the proper performance of the functions of the agency, including whether the information shall have practical utility; (b) the accuracy of the agency's estimate of the burden (including hours and cost) of the proposed collection of information; (c) ways to enhance the quality, utility, and clarity of the information to be collected; and (d) ways to minimize the burden of the collection of information on respondents, including through the use of automated collection techniques or other forms of information technology.

Comments submitted in response to this notice will be summarized and/or included in the request for OMB approval of this information collection; they also will become a matter of public record.

Dated: November 15, 2013.

Gwellnar Banks,

Management Analyst, Office of the Chief Information Officer.

[FR Doc. 2013–27884 Filed 11–20–13; 8:45 am]

BILLING CODE 3510–DS–P

DEPARTMENT OF COMMERCE

International Trade Administration

[A–549–821]

Polyethylene Retail Carrier Bags From Thailand: Final Court Decision and Amended Final Results of Administrative Review of the Antidumping Duty Order; 2006–2007

AGENCY: Enforcement and Compliance, formerly Import Administration, International Trade Administration, Department of Commerce.

SUMMARY: On January 18, 2012, the Court of International Trade (CIT) entered judgment in *KYD Inc.* v. *United States,* 807 F. Supp. 2d 1372 (CIT January 18, 2012) (*KYD* v. *United States*) affirming the Department's results of redetermination pursuant to remand, which recalculated the weighted-average duty margin for polyethylene retail carrier bags (PRCBs) from Thailand produced or exported by King Pac Industrial Co., Ltd. (King Pac) and Master Packaging Co., Ltd. (Master Packaging) and imported by KYD Inc. (KYD) for the period of review (POR) of August 1, 2006, through July 31, 2007, to be 94.62 percent. KYD appealed the CIT's decision to the Court of Appeals for the Federal Circuit (CAFC). On May 29, 2013, the CAFC affirmed the judgment of the CIT.[1] The time for appeal has expired. Accordingly, the Department is amending the final results of the administrative review of the antidumping duty order on PRCBs from Thailand covering the POR, in accordance with *KYD* v. *United States.*

DATES: *Effective Date:* November 21, 2013.

FOR FURTHER INFORMATION CONTACT: Thomas Schauer or Minoo Hatten, AD/CVD Operations, Office I, Enforcement and Compliance, International Trade Administration, U.S. Department of Commerce, 14th Street and Constitution Avenue NW., Washington, DC 20230; telephone: (202) 482–0410, and (202) 482–1690, respectively.

SUPPLEMENTARY INFORMATION:

Background

On January 15, 2009, the Department published the final results of the administrative review of the antidumping duty order on PRCBs from Thailand.[2] KYD challenged the Department's selection of adverse facts available applied to subject merchandise produced or exported by King Pac and Master Packaging at the CIT.

On April 28, 2011, the CIT remanded for reconsideration, the selected adverse facts available rate specifically applied to merchandise both produced or exported by King Pac and Master Packaging and imported by KYD.[3] On remand, the Department revisited its selection of an adverse facts available rate applied to merchandise produced or exported by King Pac and Master Packaging and imported by KYD, applying a rate of 94.62 percent.[4] The CIT affirmed the Department's Final Remand Results on January 18, 2012.[5] The CIT subsequently denied KYD's motion for reconsideration.[6] Upon appeal, the CAFC affirmed the Department's Final Remand Results on May 29, 2013. KYD did not appeal the CAFC's judgment.

Amended Final Results

As the time period for appealing the CAFC's affirmation of the CIT's judgment has expired, the litigation is final and conclusive in this proceeding. Pursuant to section 516A(e) of the Tariff Act of 1930, as amended, we are, therefore, amending our final results of review covering the POR August 1, 2006, through July 31, 2007, to reflect the findings of the remand redetermination affirmed in *KYD* v. *United States.*

Accordingly, the Department will determine, and U.S. Customs and Border Protection (CBP) shall assess, antidumping duties on all subject merchandise both produced or exported by King Pac and Master Packaging and imported by KYD for the period August 1, 2006, through July 31, 2007, at the rate of 94.62 percent, in accordance with these amended final results.[7] The Department intends to issue liquidation instructions to CBP 15 days after publication of these amended final results in the **Federal Register.**

Cash Deposit Requirements

The CIT held in its April 28, 2011, judgment, which remanded the *Final Results* to the Department, that the legal question at issue in this litigation pertained only to entries imported by KYD during the POR and did not pertain to ''future entries whatsoever.''[8] Accordingly, in the Final Remand Results, the Department applied the 94.62 percent rate ''only to the assessment of antidumping duties on entries of subject merchandise produced and/or exported by King Pac or Master Packaging and imported by KYD during the period of review.''[9] Because the CIT affirmed the Final Remand Results in *KYD* v. *United States,* no modification to the Department's cash deposit instructions is necessary in this case.

Notification

We are issuing and publishing these amended final results of administrative review in accordance with sections 751(a)(1) and 777(i) of the Tariff Act of 1930, as amended.

Dated: November 15, 2013.

Ronald K. Lorentzen,

Acting Assistant Secretary for Enforcement and Compliance.

[FR Doc. 2013–27973 Filed 11–20–13; 8:45 am]

BILLING CODE 3510–DS–P

---

[1] *See KYD Inc.* v. *United States,* Nos. 2012–1533 and 1534, 2013 U.S. App. LEXIS 11984 (Fed. Cir. May 29, 2013) (affirming the CIT's judgment without opinion, in accordance with Rule 36 of the CAFC's Rules of Practice).

[2] *See Polyethylene Retail Carrier Bags from Thailand: Final Results and Partial Rescission of Antidumping Duty Administrative Review,* 74 FR 2511 (January 15, 2009) (*Final Results*).

[3] *See KYD Inc.* v. *United States,* 779 F. Supp. 2d 1361 (CIT April 28, 2011).

[4] *See* ''Final Results of Redetermination Pursuant to Remand, KYD Inc. v. United States, Court No. 09–00034, Slip Op. 11–49'' (August 16, 2011) (Final Remand Results).

[5] *See KYD* v. *United States,* 807 F. Supp. 2d at 1378.

[6] *See KYD Inc.* v. *United States,* 836 F. Supp. 2d 1410 (CIT May 8, 2012).

[7] Subsequent to the CIT's affirmance of the Department's remand redetermination, no administrative review was requested pursuant to 19 CFR 351.213(b) during the applicable anniversary months for entries of subject merchandise produced or exported by King Pac and Master Packaging and imported by KYD.

[8] *See KYD Inc.* v. *United States,* 779 F. Supp. 2d at 1372.

[9] *See* Final Remand Results, at 21.

DEPARTMENT OF COMMERCE

International Trade Administration

[A–570–851]

Certain Preserved Mushrooms From the People's Republic of China: Preliminary Results and Rescission in Part of Antidumping Duty Administrative Review; 2012–2013

AGENCY: Enforcement and Compliance, formerly Import Administration, International Trade Administration, Department of Commerce.

DATES: *Effective Date:* November 21, 2013.

SUMMARY: The Department of Commerce (the Department) is conducting an administrative review of the antidumping duty order on certain preserved mushrooms from the People's Republic of China (PRC) covering the period of review (POR) February 1, 2012, through January 31, 2013. The Department has preliminarily applied facts otherwise available with an

adverse inference (AFA) to the PRC-wide entity because an element of the entity, Blue Field (Sichuan) Food Industrial Co., Ltd. (Blue Field), failed to act to the best of its ability in complying with the Department's request for information in this review and, consequently, significantly impeded the proceeding. In addition, the Department is rescinding this administrative review in part with respect to certain exporters for which all review requests have been withdrawn.

FOR FURTHER INFORMATION CONTACT:

Deborah Scott, Michael J. Heaney, or Robert James, AD/CVD Operations, Office VI, Enforcement and Compliance, International Trade Administration, U.S. Department of Commerce, 14th Street and Constitution Avenue NW., Washington, DC 20230; telephone: (202) 482–2657, (202) 482–4475, or (202) 482–0649, respectively.

SUPPLEMENTARY INFORMATION:

Scope of the Order

The products covered by this antidumping order are certain preserved mushrooms, whether imported whole, sliced, diced, or as stems and pieces. The merchandise subject to this order is classifiable under subheadings: 2003.10.0127, 2003.10.0131, 2003.10.0137, 2003.10.0143, 2003.10.0147, 2003.10.0153, and 0711.51.0000 of the Harmonized Tariff Schedule of the United States (HTSUS). Although the HTSUS subheadings are provided for convenience and customs purposes, the written description of the scope of this order is dispositive.[1]

Tolling of Deadlines for Preliminary Results

As explained in the memorandum from the Assistant Secretary for Enforcement and Compliance, the Department has exercised its discretion to toll deadlines for the duration of the closure of the Federal Government from October 1, through October 16, 2013.[2] Therefore, all deadlines in this segment of the proceeding have been extended by 16 days. If the new deadline falls on a non-business day, in accordance with the Department's practice, the deadline will become the next business day. The revised deadline for the preliminary results of this review is now November 18, 2013.

Methodology

The Department has conducted this review in accordance with section 751(a)(1)(B) of the Tariff Act of 1930, as amended (the Act). AFA has been applied to the PRC-wide entity in accordance with section 776 of the Act. For a full description of the methodology underlying our conclusions, see the Preliminary Decision Memorandum. The Preliminary Decision Memorandum is a public document and is on file electronically via Enforcement and Compliance's Antidumping and Countervailing Duty Centralized Electronic Service System (IA ACCESS). IA ACCESS is available to registered users at *http://iaaccess.trade.gov,* and is available to all parties in the Central Records Unit, room 7046 of the main Department of Commerce building. In addition, a complete version of the Preliminary Decision Memorandum can be accessed directly at *http://enforcement.trade.gov/frn/.* The signed Preliminary Decision Memorandum and the electronic versions of the Preliminary Decision Memorandum are identical in content.

Partial Rescission of Review

For those exporters named in the *Initiation Notice*[3] that are not part of the PRC-wide entity for which all review requests have been withdrawn, we are rescinding this administrative review, in accordance with 19 CFR 351.213(d)(1). The exporters for which we are rescinding this review include: (1) Fujian Golden Banyan Foodstuffs Industrial Co., Ltd. (Golden Banyan);[4] (2) Guangxi Hengyong Industrial & Commercial Dev. Ltd.; (3) Guangxi Jisheng Foods, Inc.; (4) Linyi City Kangfa Foodstuff Drinkable Co., Ltd.; (5) Zhangzhou Gangchang Canned Foods Co., Ltd. (aka Zhangzhou Gangchang Canned Foods Co., Ltd., Fujian);[5] and (6) Zhangzhou Tongfa Foods Industry, Co., Ltd. These exporters have separate rates from a prior segment of this proceeding. Therefore, antidumping duties shall be assessed at rates equal to the cash deposit of estimated antidumping duties required at the time of entry, or withdrawal from warehouse, for consumption, in accordance with 19 CFR 351.212(c)(2).

Intent Not To Rescind Review in Part

We have received withdrawal of review requests for the following exporters that remain a part of the PRC-wide entity, which is currently under review: (1) Ayecue (Liaocheng) Foodstuff Co., Ltd.; (2) China National Cereals, Oils & Foodstuffs Import & Export Corp.; (3) China Processed Food Import & Export Co.; (4) Dujiangyan Xingda Foodstuff Co., Ltd.; (5) Fujian Pinghe Baofeng Canned Foods; (6) Fujian Yuxing Fruits and Vegetables Foodstuffs Development Co., Ltd.; (7) Fujian Zishan Group Co., Ltd.; (8) Guangxi Eastwing Trading Co., Ltd.; (9) Inter-Foods (Dongshan) Co., Ltd.; (10) Longhai Guangfa Food Co., Ltd.; (11) Primera Harvest (Xiangfan) Co., Ltd.; (12) Shandong Fengyu Edible Fungus Corporation Ltd.; (13) Shandong Jiufa Edible Fungus Corporation, Ltd.; (14) Shandong Yinfeng Rare Fungus Corporation, Ltd.; (15) Sun Wave Trading Co., Ltd.; (16) Xiamen Greenland Import & Export Co., Ltd.; (17) Xiamen Gulong Import & Export Co., Ltd.; (18) Xiamen Jiahua Import & Export Trading Co., Ltd.; (19) Xiamen Longhuai Import & Export Co., Ltd.; (20) Zhangzhou Golden Banyan; (21) Zhangzhou Long Mountain Foods Co., Ltd.; (22) Zhejiang Iceman Food Co., Ltd.;[6] and (23) Zhejiang Iceman Group Co., Ltd.

For those exporters named in the *Initiation Notice* for which all review requests have been withdrawn, but which have not previously received

[1] For a complete description of the scope of the order, see ''Certain Preserved Mushrooms from the People's Republic of China: Decision Memorandum for the Preliminary Results of the 2012–2013 Administrative Review,'' dated concurrently with this notice and incorporated herein by reference (Preliminary Decision Memorandum).

[2] *See* Memorandum for the Record from Paul Piquado, Assistant Secretary for Enforcement and Compliance, ''Deadlines Affected by the Shutdown of the Federal Government'' (October 18, 2013).

[3] *See Initiation of Antidumping and Countervailing Duty Administrative Reviews and Request for Revocation in Part,* 78 FR 19197 (March 29, 2013) (*Initiation Notice*).

[4] The Department considers Golden Banyan to be distinct from another company with a similar name for which a review was originally requested, Zhangzhou Golden Banyan Foodstuffs Industrial Co., Ltd. (Zhangzhou Golden Banyan). In the administrative review covering the period February 1, 2010 through January 31, 2011, the Department calculated a separate rate for Golden Banyan, while it considered Zhangzhou Golden Banyan to remain a part of the PRC-wide entity. *See Certain Preserved Mushrooms From the People's Republic of China: Final Results of Antidumping Duty Administrative Review,* 77 FR 55808 (September 11, 2012). The record of this review does not contain any evidence that suggests these two companies should be considered a single entity.

[5] Zhangzhou Gangchang Canned Foods Co., Ltd., Fujian was found to be the name of the company initially referenced by that party and the Department as Zhangzhou Gangchang Canned Foods Co., Ltd. *See Certain Preserved Mushrooms from the People's Republic of China: Preliminary Results of Antidumping Duty New Shipper Reviews,* 74 FR 14772 (April 1, 2009), unchanged in *Certain Preserved Mushrooms from the People's Republic of China: Final Results of Antidumping Duty New Shipper Reviews* 74 FR 28882 (June 18, 2009). The record of this review does not contain any evidence that contradicts this finding.

[6] The Department has found that Zhejiang Iceman Food Co., Ltd. should be equated with Zhejiang Iceman Group Co., Ltd. *See Certain Preserved Mushrooms From the People's Republic of China: Amended Final Results of Antidumping Duty Administrative Review,* 76 FR 70112 (November 10, 2011). The record of this review does not contain any evidence that contradicts this finding.

separate rate status, the Department's practice is to refrain from rescinding the review with respect to these exporters at this time.[7] As stated above, requests for review of several exporters belonging to the PRC-wide entity were timely withdrawn. While the requests for review were timely withdrawn, the exporters remain part of the PRC-wide entity. The PRC-wide entity is under review for these preliminary results. Therefore, at this time, we are not rescinding this review with respect to those exporters belonging to the PRC-wide entity for which a request for review has been withdrawn.

Preliminary Determination of No Shipments

Xiamen International Trade & Industrial Co., Ltd. (XITIC) and Zhangzhou Hongda Import & Export Trading Co., Ltd. (Zhangzhou Hongda) submitted timely certifications of no shipments, entries, or sales of subject merchandise during the POR. The Department issued a ''No Shipment Inquiry'' to CBP to confirm that there were no entries of subject merchandise exported by XITIC or Zhangzhou Hongda during the POR. Based on the certifications and our analysis of CBP information, we preliminary determine that XITIC and Zhangzhou Hongda did not have any reviewable transactions during the POR. However, consistent with our practice, the Department finds that it is not appropriate to rescind the review with respect to XITIC and Zhangzhou Hongda, but rather to complete the review of XITIC and Zhangzhou Hongda and issue appropriate instructions to CBP based on the final results of the review.[8]

Preliminary Results of the Review

The Department has preliminarily determined that the following weighted-average dumping margin exists for the period February 1, 2012 through January 31, 2013:

Exporter	Weighted-average dumping margin (percent)
PRC-wide entity [9]	308.33

Public Comment and Opportunity To Request a Hearing

Interested parties may submit case briefs within 30 days after the date of publication of this notice of preliminary results of the review.[10] Rebuttal briefs, which must be limited to issues raised in the case briefs, must be filed within five days after the time limit for filing case briefs.[11] Parties who submit case briefs or rebuttal briefs in this proceeding are requested to submit with each argument: (1) A statement of the issue; (2) a brief summary of the argument; and (3) a table of authorities.[12] Interested parties submitting case and rebuttal briefs should do so pursuant to the Department's electronic filing system, IA ACCESS.[13]

Any interested party may request a hearing within 30 days of the publication of this notice.[14] Hearing requests should contain the following information: (1) The party's name, address, and telephone number; (2) the number of participants; and (3) a list of the issues to be discussed. Oral argument presentations will be limited to issues raised in the briefs. If a request for a hearing is made, parties will be notified of the date and time for the hearing to be held at the U.S. Department of Commerce, 1401 Constitution Avenue NW., Washington, DC 20230.[15]

The Department intends to issue the final results of this administrative review, which will include the results of our analysis of all issues raised in the briefs, within 120 days after the publication of these preliminary results in the **Federal Register**, pursuant to section 751(a)(3)(A) of the Act.

Assessment Rates

With regard to the partial rescission of this review, the Department will instruct CBP to assess antidumping duties on all appropriate entries. The Department intends to issue appropriate partial rescission assessment instructions directly to CBP 15 days after publication of these preliminary results of review in the **Federal Register**.

Upon issuance of the final results of this review, the Department will determine, and CBP shall assess, antidumping duties on all appropriate entries of subject merchandise covered by this review.[16] For the PRC-wide entity, we will instruct CBP to assess antidumping duties at an *ad valorem* rate equal to the weighted-average dumping margin published in the final results of this review. The Department intends to issue assessment instructions to CBP 15 days after the date of publication of the final results of this review in the **Federal Register**.

The Department recently announced a refinement to its assessment practice in NME cases. Pursuant to this refinement in practice, for entries that were not reported in U.S. sales databases submitted by companies individually examined during the review, the Department will instruct CBP to liquidate such entries at the PRC-wide rate. In addition, if the Department determines that an exporter under review had no shipments of the subject merchandise, any suspended entries that entered under that exporter's case number (*i.e.,* at that exporter's rate) will be liquidated at the PRC-wide rate.[17]

Cash Deposit Requirements

The following cash deposit requirements, when imposed, will apply to all shipments of subject merchandise entered, or withdrawn from warehouse, for consumption on or after the publication of the final results of this administrative review, as provided by section 751(a)(2)(C) of the Act: (1) For any previously reviewed or investigated PRC and non-PRC exporter not listed above that received a separate rate in a previous segment of this proceeding, the cash deposit rate will continue to be the existing exporter-specific rate published for the most recently completed period; (2) for all PRC exporters that have not

[7] *See, e.g., Small Diameter Graphite Electrodes From the People's Republic of China: Final Results of Antidumping Duty Administrative Review; 2011–2012,* 78 FR 55680, 55681 (September 11, 2013).

[8] *See Non-Market Economy Antidumping Proceedings: Assessment of Antidumping Duties,* 76 FR 65694 (October 24, 2011).

[9] The PRC-wide entity includes, among other companies, Blue Field (Sichuan) Food Industrial Co., Ltd.

[10] *See* 19 CFR 351.309(c)(1)(ii).

[11] *See* 19 CFR 351.309(d)(1)–(2).

[12] *See* 19 CFR 351.309(c)(2), (d)(2).

[13] *See* 19 CFR 351.303(b).

[14] *See* 19 CFR 351.310(c).

[15] *See* 19 CFR 351.310(d).

[16] *See* 19 CFR 351.212(b).

[17] For a full discussion of this practice, see *Non-Market Economy Antidumping Proceedings: Assessment of Antidumping Duties,* 76 FR 65694 (October 24, 2011).

been found to be entitled to a separate rate, the cash deposit rate will be that for the PRC-wide entity (*i.e.,* 308.33 percent); and (3) for all non-PRC exporters of subject merchandise which have not received their own rate, the cash deposit rate will be the rate applicable to the PRC exporter that supplied the non-PRC exporter. These cash deposit requirements, when imposed, shall remain in effect until further notice.

Notification to Importers

This notice also serves as a preliminary reminder to importers of their responsibility under 19 CFR 351.402(f)(2) to file a certificate regarding the reimbursement of antidumping duties prior to liquidation of the relevant entries during the POR. Failure to comply with this requirement could result in the Department's presumption that reimbursement of antidumping duties occurred and the subsequent assessment of double antidumping duties.

These preliminary results are issued and published in accordance with sections 751(a)(1) and 777(i)(1) of the Act.

Dated: November 15, 2013.

Ronald K. Lorentzen,

Acting Assistant Secretary for Enforcement and Compliance.

Appendix—List of Topics Discussed in the Preliminary Decision Memorandum

1. Background
2. Respondent Selection
3. Scope of the Order
4. Partial Rescission of Review
5. Intent Not To Rescind Review in Part
6. Preliminary Determination of No Shipments
7. Non-Market Economy Country Status
8. Separate Rates Determination
9. The PRC-Wide Entity
10. Adverse Facts Available
11. Conclusion

[FR Doc. 2013–27972 Filed 11–20–13; 8:45 am]

BILLING CODE 3510–DS–P

DEPARTMENT OF COMMERCE

International Trade Administration

[A–570–964]

Seamless Refined Copper Pipe and Tube From the People's Republic of China: Preliminary Results and Partial Rescission of Administrative Review; 2011–2012

AGENCY: Enforcement and Compliance, Formerly Import Administration, International Trade Administration, Department of Commerce.

SUMMARY: In response to requests from interested parties, the Department of Commerce (the ''Department'') is conducting the second administrative review of the antidumping duty order on seamless refined copper pipe and tube from the People's Republic of China (''PRC''), covering the period November 1, 2011 through October 31, 2012. The Department has preliminarily determined that during the period of review (''POR'') respondents in this proceeding have made sales of subject merchandise at less than normal value (''NV'').

DATES: *Effective Date:* November 21, 2013.

FOR FURTHER INFORMATION CONTACT: Thomas Martin, AD/CVD Operations, Office IV, Enforcement and Compliance, International Trade Administration, U.S. Department of Commerce, 14th Street and Constitution Avenue NW., Washington, DC 20230; telephone: (202) 482–3936.

SUPPLEMENTARY INFORMATION:

Scope of Order

The merchandise subject to the order is seamless refined copper pipe and tube. The product is currently classified under Harmonized Tariff Schedule of the United States (''HTSUS'') item numbers 7411.10.1030 and 7411.10.1090. Products subject to this order may also enter under HTSUS item numbers 7407.10.1500, 7419.99.5050, 8415.90.8065, and 8415.90.8085. Although the HTSUS numbers are provided for convenience and customs purposes, the written description of the scope of this order remains dispositive.[1]

Tolling of Deadlines for Preliminary Results

As explained in the memorandum from the Assistant Secretary for Enforcement and Compliance, the Department has exercised its discretion to toll deadlines for the duration of the closure of the Federal Government from October 1, through October 16, 2013.[2] Therefore, all deadlines in this segment of the proceeding have been extended by 16 days. If the new deadline falls on a non-business day, in accordance with the Department's practice, the deadline will become the next business day. The revised deadline for the preliminary results of this review is now November 18, 2013.

Partial Rescission of Administrative Review

Pursuant to 19 CFR 351.213(d)(1), the Secretary will rescind an administrative review, in whole or in part, if a party who requested the review withdraws the request within 90 days of the date of publication of the notice of initiation of the requested review. The Department is rescinding this review with regard to Luvata Tube (Zhongshan) Ltd. and Luvata Alltop (Zhongshan) Ltd., as parties have timely withdrawn all review requests with respect to these companies. Because Luvata Tube (Zhongshan) Ltd. and Luvata Alltop (Zhongshan) Ltd. have separate rates from a prior completed segment of this proceeding, antidumping duties shall be assessed at rates equal to the rates of the cash deposits of estimated antidumping duties required at the time of entry, or withdrawal from warehouse, for consumption, in accordance with 19 CFR 351.212(c)(2).

Reviews were also requested for Shanghai Hailiang Metal Trading Limited and Hong Kong Hailiang Metal, companies named in the *Initiation Notice,*[3] and those requests were also timely withdrawn. However, we are not rescinding the reviews for these two companies at this time, because they do not have a separate rate and, therefore, each currently remains part of the PRC-wide entity. The PRC-wide entity is currently subject to this administrative review.

Methodology

The Department has conducted this review in accordance with section 751(a)(1)(A) of the Tariff Act of 1930, as amended (the ''Act''). Export prices and constructed export prices were calculated in accordance with section 772 of the Act. Because the PRC is a nonmarket economy within the meaning of section 771(18) of the Act, NV has been calculated in accordance with section 773(c) of the Act. Specifically, the respondent's factors of production have been valued using prices in Thailand, which is at a level of economical development comparable to that of the PRC and a significant producer of merchandise comparable to the subject merchandise.

[1] *See Seamless Refined Copper Pipe and Tube From Mexico and the People's Republic of China: Antidumping Duty Orders and Amended Final Determination of Sales at Less Than Fair Value From Mexico,* 75 FR 71070 (November 22, 2010).

[2] *See* Memorandum for the Record from Paul Piquado, Assistant Secretary for Enforcement and Compliance, ''Deadlines Affected by the Shutdown of the Federal Government'' (October 18, 2013).

[3] *See Initiation of Antidumping and Countervailing Duty Administrative Reviews and Request for Revocation in Part,* 77 FR 77017 (December 31, 2012). These companies are not included in the collapsed entity of Hong Kong Hailiang Metal Trading Limited, Zhejiang Hailiang Co., Ltd., and Shanghai Hailiang Copper Co., Ltd.

For a full description of the methodology underlying our conclusions, please see the Memorandum to Ronald K. Lorentzen, Acting Assistant Secretary for Enforcement and Compliance, from Christian Marsh, Deputy Assistant Secretary for Antidumping and Countervailing Duty Operations, ''Decision Memorandum for the Preliminary Results of the 2011–2012 Administrative Review of the Antidumping Duty Order on Seamless Refined Copper Pipe and Tube from the People's Republic of China, dated concurrently with this notice (''Preliminary Decision Memorandum''), and hereby adopted by this notice. The Preliminary Decision Memorandum is a public document and is on file electronically via Enforcement and Compliance's Antidumping and Countervailing Duty Centralized Electronic Service System (''IA ACCESS''). IA ACCESS is available to registered users at *http://iaaccess.trade.gov,* and it is available to all parties in the Central Records Unit, Room 7046 of the main Department of Commerce building. In addition, a complete version of the Preliminary Decision Memorandum can be accessed at *http://trade.gov/enforcement/.* The signed Preliminary Decision Memorandum and the electronic versions of the Preliminary Decision Memorandum are identical in content.

Preliminary Results of Review

The Department has preliminarily determined that the following weighted-average dumping margins exist:

Exporter	Weighted-average dumping margin (percent)
Golden Dragon Precise Copper Tube Group, Inc., Hong Kong GD Trading Co., Ltd., and Golden Dragon Holding (Hong Kong) International, Ltd	3.55
Hong Kong Hailiang Metal Trading Limited, Zhejiang Hailiang Co., Ltd., and Shanghai Hailiang Copper Co., Ltd	3.55
PRC-Wide Entity [4]	60.85

Disclosure and Public Comment

The Department will disclose calculations performed for these preliminary results to the parties within five days of the date of publication of this notice in accordance with 19 CFR 351.224(b). Interested parties may submit written comments no later than 30 days after the date of publication of these preliminary results.[5] Rebuttals to written comments may be filed no later than five days after the written comments are filed.[6]

Any interested party may request a hearing within 30 days of publication of this notice.[7] Hearing requests should contain the following information: (1) The party's name, address, and telephone number; (2) the number of participants; and (3) a list of the issues to be discussed. Oral presentations will be limited to issues raised in the briefs. If a request for a hearing is made, parties will be notified of the time and date for the hearing to be held at the U.S. Department of Commerce, 1401 Constitution Avenue NW., Washington, DC 20230.[8]

The Department intends to issue the final results of this administrative review, which will include the results of its analysis of issues raised in any written comments, within 120 days of publication of these preliminary results, pursuant to section 751(a)(3)(A) of the Act.

Deadline for Submission of Publicly Available Surrogate Value Information

In accordance with 19 CFR 351.301(c)(3)(ii), the deadline for submission of publicly available information to value factors of production under 19 CFR 351.408(c) is 20 days after the date of publication of the preliminary results. In accordance with 19 CFR 351.301(c)(1), if an interested party submits factual information less than ten days before, on, or after (if the Department has extended the deadline) the applicable deadline for submission of such factual information, an interested party may submit factual information to rebut, clarify, or correct the factual information no later than ten days after such factual information is served on the interested party. However, if the deadline for submission of surrogate value information has passed, the Department generally will not accept additional or alternative surrogate value information not previously on the record.[9] Furthermore, the Department generally will not accept business proprietary information in either the surrogate value submissions or the rebuttals thereto, as the regulation regarding the submission of surrogate values allows only for the submission of publicly available information.[10]

Assessment Rates

Upon issuing the final results of the review, the Department shall determine, and U.S. Customs and Border Protection (''CBP'') shall assess, antidumping duties on all appropriate entries. The Department intends to issue assessment instructions to CBP 15 days after the date of publication of the final results of review. For any individually examined respondents whose weighted-average dumping margin is not zero or *de minimis* (*i.e.,* less than 0.5 percent), the Department will calculate importer-specific *ad valorem* duty assessment rates based on the ratio of the total amount of dumping calculated for the importer's examined sales to the total entered value of those same sales in accordance with 19 CFR 351.212(b)(1).[11]

The Department will instruct CBP to assess antidumping duties on all appropriate entries covered by this review when the importer-specific assessment rate calculated in the final results of this review is not zero or *de minimis.* Where either the respondent's weighted-average dumping margin is zero or *de minimis,* or an importer-specific assessment rate is zero or *de minimis,* the Department will instruct CBP to liquidate the appropriate entries without regard to antidumping duties.

The Department recently announced a refinement to its assessment practice in NME cases. Pursuant to this refinement in practice, for entries that were not reported in the U.S. sales databases submitted by companies individually examined during this review, the Department will instruct CBP to liquidate such entries at the PRC-wide rate. In addition, if the Department determines that an exporter under review had no shipments of the subject merchandise, any suspended entries that entered under that exporter's case

[4] The PRC-Wide Entity includes, *inter alia,* Shanghai Hailiang Metal Trading Limited, Hong Kong Hailiang Metal, China Hailiang Metal Trading, Foshan Hua Hong Copper Tube Co., Ltd., Guilin Lijia Metals Co., Ltd., Sinochem Ningbo Import & Export Co., Ltd., Sinochem Ningbo Ltd., Taicang City Jinxin Copper Tube Co., Ltd., Ningbo Jintian Copper Tube Co., Ltd., Zhejiang Jiahe Pipes Inc., and Zhejiang Naile Copper Co., Ltd.

[5] *See* 19 CFR 351.309(c).

[6] *See* 19 CFR 351.309(d).

[7] *See* 19 CFR 351.310(c).

[8] *See* 19 CFR 351.310(d).

[9] *See, e.g., Glycine from the People's Republic of China: Final Results of Antidumping Duty Administrative Review and Final Rescission, in Part,* 72 FR 58809 (October 17, 2007), and accompanying Issues and Decision Memorandum at Comment 2.

[10] *See* 19 CFR 351.301(c)(3).

[11] In these preliminary results, the Department applied the assessment rate calculation method adopted in *Antidumping Proceedings: Calculation of the Weighted-Average Dumping Margin and Assessment Rate in Certain Antidumping Proceedings: Final Modification,* 77 FR 8101 (February 14, 2012).

number (*i.e.,* at that exporter's rate) will be liquidated at the PRC-wide rate.[12]

The final results of this review shall be the basis for the assessment of antidumping duties on entries of merchandise covered by the final results of this review and for future deposits of estimated antidumping duties.

Cash Deposit Requirements

The following cash deposit requirements will be effective upon publication of the final results of this administrative review for shipments of the subject merchandise from the PRC entered, or withdrawn from warehouse, for consumption on or after the publication date, as provided by section 751(a)(2)(C) of the Act: (1) For the exporters listed above, the cash deposit rate will be equal to the weighted-average dumping margin established in the final results of this review (except, if the rate is zero or *de minimis,* then the cash deposit rate will be zero for that exporter); (2) for previously investigated or reviewed PRC and non-PRC exporters not listed above that have separate rates, the cash deposit rate will continue to be the exporter-specific rate published for the most recently completed segment of this proceeding; (3) for all PRC exporters of subject merchandise that have not been found to be entitled to a separate rate, the cash deposit rate will be 60.85 percent, which is the rate for the PRC-wide entity;[13] and (4) for all non-PRC exporters of subject merchandise which have not received their own rate, the cash deposit rate will be the rate applicable to the PRC exporter that supplied that non-PRC exporter. These deposit requirements, when imposed, shall remain in effect until further notice.

Notification to Importers

This notice serves as a preliminary reminder to importers of their responsibility under 19 CFR 351.402(f)(2) to file a certificate regarding the reimbursement of antidumping duties prior to liquidation of the relevant entries during this review period. Failure to comply with this requirement could result in the CBP assessing double antidumping duties based on the Department's presumption that antidumping duties were reimbursed.

[12] For a full discussion of this practice, *see Non-Market Economy Antidumping Proceedings: Assessment of Antidumping Duties,* 76 FR 65694 (October 24, 2011).

[13] *See Seamless Refined Copper Pipe and Tube From the People's Republic of China: Final Determination of Sales at Less Than Fair Value,* 75 FR 60725, 60729 (October 1, 2010).

This administrative review and notice are in accordance with sections 751(a)(1) and 777(i) of the Act and 19 CFR 351.213.

Dated: November 14, 2013.

Ronald K. Lorentzen,

Acting Assistant Secretary for Enforcement and Compliance.

Appendix—List of Topics Discussed in the Preliminary Decision Memorandum

1. Affiliation and Collapsing
2. Separate Rate
3. Rate for Non-Examined, Separate Rate Respondents
4. PRC-Wide Entity
5. Use of Facts Available and Adverse Facts Available
6. Surrogate Country
7. Date of Sale
8. Fair Value Comparisons
9. Determination of Comparison Method
10. Export Price
11. Constructed Export Price
12. Normal Value
13. Factor Valuations
14. Duty Absorption
15. Currency Conversion

[FR Doc. 2013–27971 Filed 11–20–13; 8:45 am]

BILLING CODE 3510–DS–P

DEPARTMENT OF COMMERCE

National Oceanic and Atmospheric Administration

Proposed Information Collection; Comment Request; Pacific Tuna Fisheries Logbook

AGENCY: National Oceanic and Atmospheric Administration (NOAA), Commerce.

ACTION: Notice.

SUMMARY: The Department of Commerce, as part of its continuing effort to reduce paperwork and respondent burden, invites the general public and other Federal agencies to take this opportunity to comment on proposed and/or continuing information collections, as required by the Paperwork Reduction Act of 1995.

DATES: Written comments must be submitted on or before January 21, 2014.

ADDRESSES: Direct all written comments to Jennifer Jessup, Departmental Paperwork Clearance Officer, Department of Commerce, Room 6616, 14th and Constitution Avenue NW., Washington, DC 20230 (or via the Internet at *JJessup@doc.gov).*

FOR FURTHER INFORMATION CONTACT: Requests for additional information or copies of the information collection instrument and instructions should be directed to Rachael Wadsworth, (562) 980–4036 or *Rachael.Wadsworth@noaa.gov*

SUPPLEMENTARY INFORMATION:

I. Abstract

United States (U.S.) participation in the Inter-American Tropical Tuna Commission (IATTC) results in certain recordkeeping requirements for U.S. fishermen who fish in the IATTC's area of management responsibility. These fishermen must maintain a log of all operations conducted from the fishing vessel, including the date, noon position, and the tonnage of fish aboard the vessel, by species. The logbook form provided by the IATTC is universally used by U.S. fishermen to meet this recordkeeping requirement. The information in the logbooks includes areas and times of operation and catch and effort by area. Logbook data are used in stock assessments and other research concerning the fishery. If the data were not collected or if erroneous data were provided, the IATTC assessments would likely be incorrect and there would be an increased risk of overfishing or inadequate management of the fishery.

II. Method of Collection

Vessel operators maintain bridge logs on a daily basis, and the forms are either mailed to the IATTC or to National Marine Fisheries Service (NMFS) at the completion of each trip. The data are processed and maintained as confidential by the IATTC.

III. Data

OMB Control Number: 0648–0148.
Form Number: None.
Type of Review: Regular submission.
Affected Public: Individuals or households, business or other for profit organizations.
Estimated Number of Respondents: 11.
Estimated Time per Response: 5 minutes.
Estimated Total Annual Burden Hours: 170.
Estimated Total Annual Cost to Public: $122.

IV. Request for Comments

Comments are invited on: (a) Whether the proposed collection of information is necessary for the proper performance of the functions of the agency, including whether the information shall have practical utility; (b) the accuracy of the agency's estimate of the burden (including hours and cost) of the proposed collection of information; (c) ways to enhance the quality, utility, and clarity of the information to be collected; and (d) ways to minimize the

burden of the collection of information on respondents, including through the use of automated collection techniques or other forms of information technology.

Comments submitted in response to this notice will be summarized and/or included in the request for OMB approval of this information collection; they also will become a matter of public record.

Dated: November 15, 2013.

Gwellnar Banks,

Management Analyst, Office of the Chief Information Officer.

[FR Doc. 2013–27883 Filed 11–20–13; 8:45 am]

BILLING CODE 3510–22–P

DEPARTMENT OF COMMERCE

National Oceanic and Atmospheric Administration

RIN 0648–XC974

Atlantic Highly Migratory Species; Exempted Fishing, Scientific Research, Display, and Chartering Permits; Letters of Acknowledgment

AGENCY: National Marine Fisheries Service (NMFS), National Oceanic and Atmospheric Administration (NOAA), Commerce.

ACTION: Notice of intent; request for comments.

SUMMARY: NMFS announces its intent to issue Exempted Fishing Permits (EFPs), Scientific Research Permits (SRPs), Display Permits, Letters of Acknowledgment (LOAs), and Chartering Permits for Atlantic highly migratory species (HMS) in 2014. Exempted fishing permits and related permits would authorize collection of a limited number of tunas, swordfish, billfishes, and sharks (collectively known as HMS) from Federal waters in the Atlantic Ocean, Caribbean Sea, and Gulf of Mexico for the purposes of scientific data collection and public display. Chartering permits allow the collection of HMS on the high seas or in the Exclusive Economic Zone of other nations under certain conditions. Generally, EFPs and related permits will be valid from the date of issuance through December 31, 2014, unless otherwise specified, subject to the terms and conditions of individual permits.

DATES: Written comments on these activities received in response to this notice will be considered by NMFS when issuing EFPs and related permits and must be received on or before December 23, 2013.

ADDRESSES: Comments may be submitted by any of the following methods:

- *Email: nmfs.hms.efp2014@noaa.gov.* Include in the subject line the following identifier: 0648–XC974.
- *Mail:* Craig Cockrell, Highly Migratory Species Management Division (F/SF1), NMFS, 1315 East-West Highway, Silver Spring, MD 20910.
- *Fax:* (301) 713–1917.

FOR FURTHER INFORMATION CONTACT: Craig Cockrell, phone: (301) 427–8503, fax: (301) 713–1917.

SUPPLEMENTARY INFORMATION: Issuance of EFPs and related permits are necessary for the collections of HMS for public display and scientific research to exempt them from regulations (e.g., fishing seasons, prohibited species, authorized gear, closed areas, and minimum sizes) that may otherwise prohibit the collection. Collection for scientific research and display represents a small portion of the overall fishing mortality for HMS, and this mortality is counted against the quota of the species harvested, as appropriate and applicable. The terms and conditions of individual permits are unique; however, all permits will include reporting requirements, limit the number and species of HMS to be collected, and only authorize collection in Federal waters of the Atlantic Ocean, Gulf of Mexico, and Caribbean Sea.

EFPs and related permits are issued under the authority of the Magnuson-Stevens Fishery Conservation and Management Reauthorization Act (Magnuson-Stevens Act) (16 U.S.C. 1801 *et seq.*) and/or the Atlantic Tunas Convention Act (ATCA) (16 U.S.C. 971 *et seq.*). Regulations at 50 CFR 600.745 and 635.32 govern scientific research activity, exempted fishing, chartering arrangements, and exempted public display and educational activities with respect to Atlantic HMS. Since the Magnuson-Stevens Act does not consider scientific research to be ''fishing,'' scientific research is exempt from this statute, and NMFS does not issue EFPs for bona fide research activities (e.g., research conducted from a research vessel and not a commercial or recreational fishing vessel) involving species that are only regulated under the Magnuson-Stevens Act (e.g., most species of sharks) and not under ATCA. NMFS generally does not consider recreational or commercial vessels bona fide research vessels. However, if the vessels have been contracted to only conduct research and not participate in any commercial or recreational fishing activities during that research, NMFS may consider those vessels as bona fide research platforms while conducting the specified research. For example, in the past, NMFS has determined that commercial pelagic longline vessels assisting with population surveys for sharks are considered bona fide research vessels while engaged only in the specified research. NMFS requests copies of scientific research plans for these activities and acknowledges the activity by issuing an LOA to researchers to indicate that the proposed activity meets the definition of research. Examples of research conducted under LOAs include tagging and releasing of sharks during bottom longline surveys to understand the distribution and seasonal abundance of different shark species, and collecting and sampling sharks caught during trawl surveys for life history studies.

Scientific research is not exempt from regulation under ATCA. NMFS issues SRPs which authorize researchers to collect HMS from bona fide research vessels for collection of species managed under this statute (e.g., tunas, swordfish, billfish, and some species of sharks). One example of research conducted under SRPs consists of scientific surveys of HMS conducted from the NOAA research vessels. EFPs are issued to researchers collecting ATCA-managed species and conducting research from commercial or recreational fishing vessels. NMFS regulations concerning the implantation or attachment of archival tags in Atlantic HMS require scientists to report their activities associated with these tags. Examples of research conducted under EFPs include deploying pop-up satellite archival tags on billfish, sharks, and tunas to determine migration patterns of these species; conducting billfish larval tows to determine billfish habitat use, life history, and population structure; and determining catch rates and gear characteristics of the swordfish buoy gear fishery.

NMFS is also seeking public comment on its intent to issue display permits for the collection of sharks and other HMS for public display in 2014. Collection of sharks and other HMS sought for public display in aquaria often involves collection when the commercial fishing seasons are closed, collection of otherwise prohibited species, and collection of fish below the regulatory minimum size. NMFS established a 60-metric ton (mt) whole weight (ww) (approximately 3,000 sharks) quota for the public display and research of sharks (combined) in the final Fishery Management Plan for Atlantic Tunas, Swordfish, and Sharks (1999 FMP). Out of this 60 mt ww quota, 1.4 mt ww is set aside to collect sandbar sharks under

a display permit and 1. 4 mt ww is set aside to collect sandbar sharks under EFPs. Public display of dusky sharks is prohibited; NMFS considers collection of dusky sharks for research under an EFP and/or SRP on a case-by-case basis. The environment effects of these quotas have been analyzed in conjunction with other sources of mortality in the 2006 Consolidated HMS FMP and its amendments, and NMFS has determined that harvesting this amount for public display and scientific research will not have a significant impact on the stocks. The number of sharks harvested for display and research has remained under the annual 60-mt ww quota every year since establishment of the quota. In 2012, approximately 39 percent of the sharks authorized for public display and scientific research purposes were actually harvested or discarded dead. Amendment 3 to the 2006 Consolidated HMS FMP also established a separate set-aside quota for smoothhound sharks (i.e., smooth dogfish, Florida smoothhounds, and Gulf smoothhounds) taken for research purposes, which would be in addition to the overall 60-mt ww quota for the public display and research of all sharks. However, the smoothhound shark research set-aside quota is not yet effective and their harvest resulting from research activities is not yet deducted from the set-aside quota for public display and research of sharks. NMFS will announce when such regulations become effective through a publication in the **Federal Register**.

For the coming year, NMFS is expecting an EFP application that would request the tagging of white sharks to track their migration patterns in the Northwest Atlantic. In 2012 and 2013, NMFS issued such a permit to conduct this tagging research on white sharks using the R/V Ocearch. After issuance of the permit, a few members of the public contacted NMFS about the use of the R/V Ocearch for tagging white sharks. They expressed concern about the relatively recent, but unrelated, incidental mortality of a white shark tagged off the coast of South Africa and requested that NMFS not issue research permits to authorize similar activities in U.S. waters. NMFS recognizes that this kind of research potentially could result in incidental mortality, although no such mortality has occurred in relation to this particular permit. Research such as this is important to better understand shark life history and provides valuable information for determining overall stock health. Further, it is in the researcher's best interest to ensure that incidental mortality does not occur due to the high costs involved with installing the tags on sharks (i.e., a dead shark represents a lost tag and little or no data). Although not anticipated, if a disproportionate number of sharks were to die as a result of this or similar research activities, then the following year, NMFS would consider that information deciding whether to issue permits to those researchers or may require additional actions to minimize the mortality of the shark before issuing any permits. In the researcher's 2012 annual report to NMFS, they reported tagging 4 white sharks and 1 porbeagle shark without any mortality. NMFS requests public comment specific to this research during the comment period of this notice.

The majority of EFPs and related permits described within this annual notice relate to scientific sampling and tagging of Atlantic HMS within existing quotas, the impacts of which have been previously analyzed in various environmental assessments and environmental impact statements for Atlantic HMS. NMFS intends to issue these permits without additional opportunity for public comment beyond what is provided in this notice. Occasionally NMFS receives applications for research activities that were not anticipated or for research that is outside the scope of general scientific sampling and tagging of Atlantic HMS or, rarely, for research that is particularly controversial. Should NMFS receive such applications, NMFS will provide additional opportunity for public comment.

NMFS is also requesting comments on chartering permits considered for issuance in 2013 to U.S. vessels fishing for HMS while operating under chartering arrangements with foreign countries. NMFS has not issued any chartering permits since 2004. A chartering arrangement is a contract or agreement between a U.S. vessel owner and a foreign entity by which the control, use, or services of a vessel are secured for a period of time for fishing for Atlantic HMS. Before fishing under a chartering arrangement, the owner of the U.S. fishing vessel must apply for a chartering permit. The vessel chartering regulations can be found at 50 CFR 635.5(a)(4) and 635.32(e).

In addition, Amendment 2 to the 2006 Consolidated HMS FMP implemented a shark research fishery. This research fishery is conducted under the auspices of the exempted fishing permit program. Research fishery permit holders assist NMFS in collecting valuable shark life history data and data for future shark stock assessments. Fishermen must fill out an application for a shark research permit under the exempted fishing program to participate in the shark research fishery. Shark research fishery participants are subject to 100-percent observer coverage in addition to other terms and conditions. A **Federal Register** notice describing the objectives for the shark research fishery in 2014 and announcing that NMFS will be accepting applications is expected to publish in the near future.

The authorized number of species for 2013, as well as the number of specimens collected in 2012, is summarized in Table 1. The number of specimens collected in 2013 will be available when all 2013 interim and annual reports are submitted to NMFS. In 2012, the number of specimens collected was less than the number of authorized specimens for most permit types, with the exception of the number of sharks taken under EFPs and Display permits. For sharks taken under EFPs, SRPs, and Display Permits 1,017 of the sharks caught were Atlantic sharpnose sharks collected during trips using longline gear. It is difficult to control the number and species of animals caught when using this gear type. Atlantic sharpnose sharks were not determined to be overfished nor experiencing overfishing in a 2007 stock assessment; therefore, the overages in Table 1 for certain permit categories in 2012 are not expected to have negative ecological impacts on the stock. When added to the total number of sharks discarded dead and kept in 2012, the 1,017 Atlantic sharpnose sharks caught is within the established 60 mt quota for EFPs, SRPs, and display permits. A new stock assessment is underway and any changes to the Atlantic sharpnose stock status could limit the amount of this species that may be authorized for collection in the future.

In all cases, mortality associated with an EFP, SRP, Display Permit, or LOA (except for larvae) is counted against the appropriate quota. NMFS issued a total of 43 EFPs, SRPs, Display Permits, and LOAs in 2012 for the collection of HMS. As of November 14, 2013, NMFS has issued a total of 38 EFPs, SRPs, Display Permits, and LOAs.

TABLE 1—SUMMARY OF HMS EXEMPTED FISHING PERMITS ISSUED IN 2011 AND 2012

["HMS" refers to multiple species being collected under a given permit type]

Permit type	2012					2013		
	Permits issued **	Authorized fish (number)	Authorized larvae (number)	Fish kept/ discarded dead (number)	Larvae kept (number)	Permits issued **	Authorized fish (number)	Authorized larvae (number)
EFP:								
HMS	3	163	0	0	0	3	229	0
Shark	10	1,118	0	† 1,145	0	10	3,239	0
Tuna	5	687	0	0	0	5	327	0
Billfish	1	20	1,000	0	2,243	1	30	1,000
SRP:								
HMS	4	83	0	1	0	3	941	0
Shark	4	2,160	0	134	0	3	2,132	0
Tuna	3	610	2,000	0	0	2	80	2000
Display:								
HMS	2	126	0	0	0	2	94	0
Shark	4	115	0	† 170	0	4	121	0
Total	36	5,082	3,000	4,485	2,243	32	7,193	3,000
LOA *:								
Shark	7	2,140	0	699	0	6	2,770	0

* LOAs are issued for bona fide scientific research activities involving non-ATCA managed species (*e.g.*, most species of sharks). Collections made under an LOA are not authorized; rather this estimated harvest for research is acknowledged by NMFS. Permitees are encouraged to report all fishing activities in a timely manner.

** 2012 permits issued listed in Table 1 do not include permits issued solely for research related to the Deepwater Horizon/BP oil spill research in the Gulf of Mexico.

† All additional collections above the authorized levels were due to incidentally caught Atlantic sharpnose sharks.

Final decisions on the issuance of any EFPs, SRPs, Display Permits, and Chartering Permits will depend on the submission of all required information about the proposed activities, NMFS review of public comments received on this notice, an applicant's reporting history on past permits issued, any prior violations of marine resource laws administered by NOAA, consistency with relevant NEPA documents, and any consultations with appropriate Regional Fishery Management Councils, states, or Federal agencies. NMFS does not anticipate any significant environmental impacts from the issuance of these EFPs as assessed in the 1999 FMP, the 2006 Consolidated HMS FMP and its amendments, 2011 Bluefin Tuna Specifications, and 2012 Swordfish Specifications.

Authority: 16 U.S.C. 971 *et seq.* and 16 U.S.C. 1801 *et seq.*

Dated: November 15, 2013.

Kelly Denit,

Acting Deputy Director, Office of Sustainable Fisheries, National Marine Fisheries Service.

[FR Doc. 2013–27969 Filed 11–20–13; 8:45 am]

BILLING CODE 3510–22–P

DEPARTMENT OF COMMERCE

National Oceanic and Atmospheric Administration

RIN 0648–XC824

Takes of Marine Mammals Incidental to Specified Activities; Taking Marine Mammals Incidental to a Pier Maintenance Project

AGENCY: National Marine Fisheries Service (NMFS), National Oceanic and Atmospheric Administration (NOAA), Commerce.

ACTION: Notice; issuance of an incidental harassment authorization.

SUMMARY: In accordance with the regulations implementing the Marine Mammal Protection Act (MMPA) as amended, notification is hereby given that we have issued an incidental harassment authorization (IHA) to the U.S. Navy (Navy) to incidentally harass, by Level B harassment only, two species of marine mammals during construction activities associated with a pier maintenance project at Naval Base Kitsap Bremerton, Washington.

DATES: This authorization is effective from December 1, 2013, through March 1, 2014.

ADDRESSES: A copy of the Navy's application and any supporting documents, as well as a list of the references cited in this document, may be obtained by visiting the internet at: *http://www.nmfs.noaa.gov/pr/permits/incidental.htm*. In the case of problems accessing these documents, please call the contact listed below. A memorandum describing our adoption of the Navy's Environmental Assessment (2013) and our associated Finding of No Significant Impact, prepared pursuant to the National Environmental Policy Act, are also available at the same site.

FOR FURTHER INFORMATION CONTACT: Ben Laws, Office of Protected Resources, NMFS, (301) 427–8401.

SUPPLEMENTARY INFORMATION:

Background

Sections 101(a)(5)(A) and (D) of the MMPA (16 U.S.C. 1361 *et seq.*) direct the Secretary of Commerce to allow, upon request by U.S. citizens who engage in a specified activity (other than commercial fishing) within a specified area, the incidental, but not intentional, taking of small numbers of marine mammals, providing that certain findings are made and the necessary prescriptions are established.

The incidental taking of small numbers of marine mammals may be allowed only if NMFS (through authority delegated by the Secretary) finds that the total taking by the specified activity during the specified time period will (i) have a negligible impact on the species or stock(s) and (ii) not have an unmitigable adverse impact

on the availability of the species or stock(s) for subsistence uses (where relevant). Further, the permissible methods of taking and requirements pertaining to the mitigation, monitoring and reporting of such taking must be set forth, either in specific regulations or in an authorization.

The allowance of such incidental taking under section 101(a)(5)(A), by harassment, serious injury, death or a combination thereof, requires that regulations be established. Subsequently, a Letter of Authorization may be issued pursuant to the prescriptions established in such regulations, providing that the level of taking will be consistent with the findings made for the total taking allowable under the specific regulations. Under section 101(a)(5)(D), NMFS may authorize such incidental taking by harassment only, for periods of not more than 1 year, pursuant to requirements and conditions contained within an Incidental Harassment Authorization. The establishment of prescriptions through either specific regulations or an authorization requires notice and opportunity for public comment.

NMFS has defined ''negligible impact'' in 50 CFR 216.103 as ''. . . an impact resulting from the specified activity that cannot be reasonably expected to, and is not reasonably likely to, adversely affect the species or stock through effects on annual rates of recruitment or survival.'' Except with respect to certain activities not pertinent here, section 3(18) of the MMPA defines ''harassment'' as: ''. . . any act of pursuit, torment, or annoyance which (i) has the potential to injure a marine mammal or marine mammal stock in the wild; or (ii) has the potential to disturb a marine mammal or marine mammal stock in the wild by causing disruption of behavioral patterns, including, but not limited to, migration, breathing, nursing, breeding, feeding, or sheltering.'' The former is termed Level A harassment and the latter is termed Level B harassment.

Summary of Request

On May 22, 2013, we received a request from the Navy for authorization of the taking, by Level B harassment only, of marine mammals incidental to pile driving in association with the Pier 6 pile replacement project at Naval Base Kitsap Bremerton, WA (NBKB). That request was modified on June 5, 2013, and a final version, which we deemed adequate and complete, was submitted on June 12, 2013. In-water work associated with the project will be conducted over three years and will occur only during the approved in-water work window from June 15 to March 1. This IHA is valid from December 1, 2013, through March 1, 2014. Two species of marine mammal are expected to be affected by the specified activities: California sea lion (*Zalophus californianus californianus*) and harbor seal (*Phoca vitulina richardii*). These species may occur year-round in the action area, although California sea lions are less common and potentially absent in the summer months.

NBKB serves as the homeport for a nuclear aircraft carrier and other Navy vessels and as a shipyard capable of overhauling and repairing all types and sizes of ships. Other significant capabilities include alteration, construction, deactivation, and dry-docking of naval vessels. Pier 6 was completed in 1926 and requires substantial maintenance to maintain readiness. Over the length of the entire project, the Navy plans to remove up to 400 deteriorating fender piles and to replace them with up to 330 new pre-stressed concrete fender piles. Under this IHA, the Navy plans to conduct 20 days of vibratory pile removal and 45 days of pile installation with an impact hammer.

Effects to marine mammals from the specified activity are expected to result from underwater sound produced by vibratory and impact pile driving. In order to assess project impacts, the Navy used thresholds recommended by NMFS, outlined later in this document. The Navy assumed practical spreading loss and used empirically-measured source levels from representative pile driving events to estimate potential marine mammal exposures. Predicted exposures are described later in this document. The calculations predict that only Level B harassment would occur associated with pile driving activities, and required mitigation measures further ensure that no more than Level B harassment would occur.

Description of the Specified Activity

Additional details regarding the specified activity were described in our Federal Register notice of proposed authorization (78 FR 56659; September 13, 2013; hereafter, the FR notice); please see that document or the Navy's application for more information.

Specific Geographic Region and Duration

NBKB is located on the north side of Sinclair Inlet in Puget Sound (see Figures 1–1 and 2–1 of the Navy's application). Sinclair Inlet, an estuary of Puget Sound extending 3.5 miles southwesterly from its connection with the Port Washington Narrows, connects to the main basin of Puget Sound through Port Washington Narrows and then Agate Pass to the north or Rich Passage to the east. Sinclair Inlet has been significantly modified by development activities. Fill associated with transportation, commercial, and residential development of NBKB, the City of Bremerton, and the local ports of Bremerton and Port Orchard has resulted in significant changes to the shoreline. The area surrounding Pier 6 is industrialized, armored and adjacent to railroads and highways. Sinclair Inlet is also the receiving body for a wastewater treatment plant located just west of NBKB. Sinclair Inlet is relatively shallow and does not flush fully despite freshwater stream inputs.

The project is expected to require a maximum of 135 days of in-water impact pile driving work and 65 days of in-water vibratory pile removal work over a 3-year period. In-water work will occur only from June 15 to March 1 of any year. During the timeframe of this IHA (December 1, 2013–March 1, 2014), 45 days of impact pile driving and 20 days of vibratory removal are planned.

Description of Specified Activity

The Navy plans to remove deteriorated fender piles at Pier 6 and replace them with prestressed concrete piles. The entire project calls for the removal of 380 12-in diameter creosoted timber piles and twenty 12-in steel pipe piles. These would be replaced with 240 18-in square concrete piles and 90 24-in square concrete piles. It is not possible to specify accurately the number of piles that might be installed or removed in any given work window, due to various delays that may be expected during construction work and uncertainty inherent to estimating production rates. The Navy assumes a notional production rate of four piles per day in determining the number of days of pile driving expected, and scheduling—as well as exposure analyses—is based on this assumption.

All piles are planned for removal via vibratory driver. The driver is suspended from a barge-mounted crane and positioned on top of a pile. Vibration from the activated driver loosens the pile from the substrate. Once the pile is released, the crane raises the driver and pulls the pile from the sediment. Vibratory extraction is expected to take approximately 5–30 minutes per pile. If piles break during removal, the remaining portion may be removed via direct pull or with a clamshell bucket. Replacement piles will be installed via impact driver and are expected to require approximately 15–60 minutes of driving time per pile,

depending on subsurface conditions. Impact driving and/or vibratory removal could occur on any work day during the period of the IHA, but a maximum of one pile driving rig will be operating at any given time.

Description of Sound Sources and Distances to Thresholds

An in-depth description of sound sources in general was provided in the FR notice (78 FR 56659; September 13, 2013). Significant sound-producing in-water construction activities associated with the project include vibratory and impact pile driving.

Sound Thresholds

NMFS currently uses acoustic exposure thresholds as important tools to help better characterize and quantify the effects of human-induced noise on marine mammals. These thresholds have predominantly been presented in the form of single received levels for particular source categories (e.g., impulse, continuous, or explosive) above which an exposed animal would be predicted to incur auditory injury or be behaviorally harassed. Current NMFS practice (in relation to the MMPA) regarding exposure of marine mammals to sound is that cetaceans and pinnipeds exposed to sound levels of 180 and 190 dB rms or above, respectively, are considered to have been taken by Level A (i.e., injurious) harassment, while behavioral harassment (Level B) is considered to have occurred when marine mammals are exposed to sounds at or above 120 dB rms for continuous sound (such as will be produced by vibratory pile driving) and 160 dB rms for pulsed sound (produced by impact pile driving), but below injurious thresholds. NMFS uses these levels as guidelines to estimate when harassment may occur.

NMFS is in the process of revising these acoustic thresholds, with the first step being to identify new auditory injury criteria for all source types and new behavioral criteria for seismic activities (primarily airgun-type sources). For more information on that process, please visit *http://www.nmfs.noaa.gov/pr/acoustics/guidelines.htm.*

Distance to Sound Thresholds

Underwater Sound—Pile driving generates underwater noise that can potentially result in disturbance to marine mammals in the project area. Please see the FR notice (78 FR 56659; September 13, 2013) for a detailed description of the calculations and information used to estimate distances to relevant threshold levels. In general, the sound pressure level (SPL) at some distance away from the source (e.g., driven pile) is governed by a measured source level, minus the transmission loss of the energy as it dissipates with distance. A practical spreading value of 15 (4.5 dB reduction in sound level for each doubling of distance) is often used under intermediate conditions, and is assumed here.

Source level, or the intensity of pile driving sound, is greatly influenced by factors such as the type of piles, hammers, and the physical environment in which the activity takes place. A number of studies have measured sound produced during underwater pile driving projects, primarily during work conducted by the Washington State Department of Transportation (WSDOT) and the California Department of Transportation (CalTrans). In order to determine reasonable SPLs that are likely to result from pile driving at NBKB, the Navy evaluated existing data on the basis of pile materials and driver type. Representative data for pile driving SPLs recorded from similar construction activities in recent years were presented in the FR notice (78 FR 56659; September 13, 2013). Underwater sound levels from pile driving for this project are assumed to be as follows:

- For impact driving of concrete piles, 191 dB re 1 μPa (rms). This value was selected as representative of the largest concrete pile size to be installed and may be conservative when smaller concrete piles are driven (CalTrans, 2012).
- For vibratory removal of steel piles, 170 dB re 1 μPa (rms). This proxy value, from the CalTrans compendium of pile driving data (CalTrans, 2012), is for vibratory installation and would likely be conservative when applied to vibratory extraction, which would be expected to produce lower SPLs than vibratory installation of same-sized piles.
- For vibratory removal of timber piles, 168 dB re 1 μPa (rms). This proxy value was measured by the Washington State Department of Transportation for vibratory removal of timber piles and is the only information we are aware of for this event type (Laughlin, 2011). All calculated distances to and the total area encompassed by the marine mammal sound thresholds are provided in Table 1.

TABLE 1—CALCULATED DISTANCE(S) TO AND AREA ENCOMPASSED BY UNDERWATER MARINE MAMMAL SOUND THRESHOLDS DURING PILE INSTALLATION [1]

Description	Distance to threshold (m) and associated area of ensonification (km^2)			
	190 dB	180 dB	160 dB	120 dB
Concrete piles, impact	1.2, <0.0001	5.4, 0.0001	117, 0.04	n/a
Steel piles, vibratory	0	0	n/a	[2] 2,154, 7.5
Timber piles, vibratory	0	0	n/a	1,585; 5.04

[1] SPLs (levels at source) used for calculations were: 191 dB for impact driving, 170 dB for vibratory removal of steel piles, and 168 dB for vibratory removal of timber piles.

[2] Areas presented take into account attenuation and/or shadowing by land. Please see Figures B–1 and B–2 in the Navy's application.

Sinclair Inlet does not represent open water, or free field, conditions. Therefore, sounds would attenuate according to the shoreline topography. Distances shown in Table 1 are estimated for free-field conditions, but areas are calculated per the actual conditions of the action area. See Figures B–1 and B–2 of the Navy's application for a depiction of areas in which each underwater sound threshold is predicted to occur at the project area due to pile driving.

Airborne Sound—Pile driving can generate airborne sound that could potentially result in disturbance to marine mammals (specifically, pinnipeds) which are hauled out or have their heads above the water's surface. As a result, the Navy analyzed the potential for pinnipeds hauled out or swimming at the surface near NBKB to be exposed to airborne SPLs that could result in Level B behavioral harassment. Although there is no official airborne sound threshold, NMFS assumes for purposes of the MMPA that behavioral disturbance can occur upon

exposure to sounds above 100 dB re 20 μPa rms (unweighted) for all pinnipeds, except harbor seals. For harbor seals, the threshold is 90 dB re 20 μPa rms (unweighted).

The potential effects of airborne sound on pinnipeds were discussed in greater detail in the FR notice (78 FR 56659; September 13, 2013). Based on available proxy data from the Navy's Test Pile Program in the Hood Canal (Illingworth & Rodkin, 2012) and from WSDOT (Laughlin, 2010), we determined that only very small zones (< 169 m^2) would be ensonified. There are no haul-out opportunities within these small zones, which are encompassed by the zones estimated for underwater sound. Protective measures will be in place out to the distances calculated for the underwater thresholds, and the distances for the airborne thresholds will be covered fully by mitigation and monitoring measures in place for underwater sound thresholds. We recognize that pinnipeds in water that are within the area of ensonification for airborne sound could be incidentally taken by either underwater or airborne sound or both. We consider these incidences of harassment to be accounted for in the take estimates for underwater sound. The effects of airborne sound are not considered further in this document's analysis.

Comments and Responses

We published a notice of receipt of the Navy's application and proposed IHA in the **Federal Register** on September 13, 2013 (78 FR 56659). NMFS received comments from the Marine Mammal Commission (Commission). The Commission's comments and our responses are provided here, and the comments have been posted on the Internet at: *http://www.nmfs.noaa.gov/pr/permits/incidental.htm.*

Comment 1: The Commission recommends that we require the Navy to conduct empirical in-water and in-air sound measurements during removal and installation of piles of various types and sizes and use those data to inform future IHA applications at NBKB.

Response: We agree with the Commission's statement that conducting empirical sound measurements during the first year of activities for the 3-year project at NBKB would augment the available data for the respective pile types, sizes, and locations (for which little data are available) and also would provide important information regarding verification of assumed source levels and propagation loss for use in subsequent IHA requests at NBKB. In a constrained fiscal environment, such as currently exists, applicants are generally not able to conduct acoustic source verifications in all situations where it may be desirable but must prioritize such efforts. However, the Navy has agreed to conduct acoustic monitoring during the first year of this project as recommended by the Commission. Further details are provided below (see ''Monitoring and Reporting'').

Description of Marine Mammals in the Area of the Specified Activity

There are five marine mammal species with records of occurrence in waters of Sinclair Inlet in the action area. These are the California sea lion, harbor seal, Steller sea lion (eastern stock only; *Eumetopias jubatus monteriensis*), gray whale (*Eschrichtius robustus*), and killer whale (*Orcinus orca*). For the killer whale, both transient (west coast stock) and resident (southern stock) animals, which are currently considered unnamed subspecies (Committee on Taxonomy, 2012), have occurred in the area. However, southern resident animals are known to have occurred only once, with the last confirmed sighting from 1997 in Dyes Inlet. A group of 19 whales from the L–25 subpod entered and stayed in Dyes Inlet, which connects to Sinclair Inlet northeast of NBKB, for 30 days. Dyes Inlet may be reached only by traversing from Sinclair Inlet through the Port Washington Narrows, a narrow connecting body that is crossed by two bridges, and it was speculated at the time that the whales' long stay was the result of a reluctance to traverse back through the Narrows and under the two bridges. There is one other unconfirmed report of a single southern resident animal occurring in the project area, in January 2009. Of these stocks, the Steller sea lion and southern resident killer whales are listed under the Endangered Species Act (ESA), with the eastern stock of Steller sea lions listed as threatened and the southern resident stock of killer whales listed as endangered. The FR notice (78 FR 56659; September 13, 2013) summarizes the population status and abundance of these species and discusses additional species known from Puget Sound, and the Navy's application provides detailed life history information. Table 2 lists the marine mammal species with expected potential for occurrence in the vicinity of NBKB during the project timeframe.

TABLE 2—MARINE MAMMALS POTENTIALLY PRESENT IN THE VICINITY OF NBKB

Species	Stock abundance [1] (CV, N_{min})	Relative occurrence in Sinclair Inlet	Season of occurrence
California sea lion U.S. Stock	296,750 (n/a, 153,337)	Common	Year-round, excluding July.
Harbor seal WA inland waters stock	[2]14,612 (0.15, 12,844)	Common	Year-round.
Steller sea lion Eastern stock	58,334–72,223 (n/a, 52,847)	Occasional presence	Seasonal (Oct–May).
Killer whale West Coast transient stock	354 (n/a)	Uncommon	Year-round.
Gray whale Eastern North Pacific stock	19,126 (0.071, 18,017)	Uncommon	Year-round.

[1] NMFS marine mammal stock assessment reports at: *http://www.nmfs.noaa.gov/pr/sars/species.htm.* CV is coefficient of variation; N_{min} is the minimum estimate of stock abundance.

[2] This abundance estimate is greater than eight years old and is therefore not considered current.

Potential Effects of the Specified Activity on Marine Mammals

We have determined that pile driving, as outlined in the project description, has the potential to result in behavioral harassment of marine mammals that may be present in the project vicinity while construction activity is being conducted. The FR notice (78 FR 56659; September 13, 2013) provides a detailed description of marine mammal hearing and of the potential effects of these construction activities on marine mammals.

Anticipated Effects on Habitat

The planned activities at NBKB would not result in permanent impacts to habitats used directly by marine mammals, but may have potential short-term impacts to food sources such as forage fish and may affect acoustic habitat (see masking discussion in proposed IHA FR notice). There are no rookeries or major haul-out sites, no known foraging hotspots, or other ocean bottom structure of significant biological importance to marine mammals present in the marine waters in the vicinity of the project area. Therefore, the main impact issue associated with the specified activity would be temporarily elevated sound levels and the associated direct effects on marine mammals, as discussed previously in the proposed IHA FR notice. The most likely impact to marine mammal habitat occurs from pile driving effects on likely marine mammal prey (i.e., fish) near NBKB and minor impacts to the immediate substrate during installation and removal of piles during the project. The FR notice (78 FR 56659; September 13, 2013) describes these potential impacts in greater detail.

Mitigation

In order to issue an incidental take authorization (ITA) under section 101(a)(5)(D) of the MMPA, we must set forth the permissible methods of taking pursuant to such activity, and other means of effecting the least practicable impact on such species or stock and its habitat, paying particular attention to rookeries, mating grounds, and areas of similar significance, and on the availability of such species or stock for taking for certain subsistence uses (where relevant).

Measurements from proxy pile driving events were coupled with practical spreading loss to estimate zones of influence (ZOIs; see ''Estimated Take by Incidental Harassment''); these values were used to develop mitigation measures for pile driving activities at NBKB. The ZOIs effectively represent the mitigation zone that would be established around each pile to prevent Level A harassment to marine mammals, while providing estimates of the areas within which Level B harassment might occur. In addition to the specific measures described later in this section, the Navy will conduct briefings between construction supervisors and crews, marine mammal monitoring team, and Navy staff prior to the start of all pile driving activity, and when new personnel join the work, in order to explain responsibilities, communication procedures, marine mammal monitoring protocol, and operational procedures.

Monitoring and Shutdown for Pile Driving

The following measures apply to the Navy's mitigation through shutdown and disturbance zones:

Shutdown Zone—For all pile driving and removal activities, the Navy will establish a shutdown zone intended to contain the area in which SPLs equal or exceed the 190 dB rms acoustic injury criterion. The purpose of a shutdown zone is to define an area within which shutdown of activity would occur upon sighting of a marine mammal (or in anticipation of an animal entering the defined area), thus preventing injury, serious injury, or death of marine mammals. Radial distances for shutdown zones are shown in Table 1. However, for this project, a minimum shutdown zone of 10 m will be established during all pile driving activities, regardless of the estimated zone. Vibratory pile driving activities are not predicted to produce sound exceeding the Level A standard, but these precautionary measures are intended to prevent the already unlikely possibility of physical interaction with construction equipment and to further reduce any possibility of acoustic injury.

Disturbance Zone—Disturbance zones are the areas in which SPLs equal or exceed 160 and 120 dB rms (for pulsed and non-pulsed sound, respectively). Disturbance zones provide utility for monitoring conducted for mitigation purposes (i.e., shutdown zone monitoring) by establishing monitoring protocols for areas adjacent to the shutdown zones. Monitoring of disturbance zones enables observers to be aware of and communicate the presence of marine mammals in the project area but outside the shutdown zone and thus prepare for potential shutdowns of activity. However, the primary purpose of disturbance zone monitoring is for documenting incidents of Level B harassment; disturbance zone monitoring is discussed in greater detail later (see ''Monitoring and Reporting''). Nominal radial distances for disturbance zones are shown in Table 1.

In order to document observed incidences of harassment, monitors record all marine mammal observations, regardless of location. The observer's location, as well as the location of the pile being driven, is known from a GPS. The location of the animal is estimated as a distance from the observer, which is then compared to the location from the pile. It may then be estimated whether the animal was exposed to sound levels constituting incidental harassment on the basis of predicted distances to relevant thresholds in post-processing of observational and acoustic data, and a precise accounting of observed incidences of harassment created. This information may then be used to extrapolate observed takes to reach an approximate understanding of actual total takes.

Monitoring Protocols—Monitoring will be conducted before, during, and after pile driving activities. In addition, observers shall record all incidences of marine mammal occurrence, regardless of distance from activity, and shall document any behavioral reactions in concert with distance from piles being driven. Observations made outside the shutdown zone will not result in shutdown; that pile segment would be completed without cessation, unless the animal approaches or enters the shutdown zone, at which point all pile driving activities would be halted. Please see the Monitoring Plan (Appendix C in the Navy's application), developed by the Navy in agreement with NMFS, for full details of the monitoring protocols. Monitoring will take place from 15 minutes prior to initiation through 30 minutes post-completion of pile driving activities. Pile driving activities include the time to remove a single pile or series of piles, as long as the time elapsed between uses of the pile driving equipment is no more than 30 minutes. The following additional measures apply to visual monitoring:

(1) Monitoring will be conducted by qualified observers, who will be placed at the best vantage point(s) practicable to monitor for marine mammals and implement shutdown/delay procedures when applicable by calling for the shutdown to the hammer operator. Qualified observers are trained biologists, with the following minimum qualifications:

- Visual acuity in both eyes (correction is permissible) sufficient for discernment of moving targets at the water's surface with ability to estimate target size and distance; use of binoculars may be necessary to correctly identify the target;
- Advanced education in biological science, wildlife management, mammalogy, or related fields (bachelor's degree or higher is required);
- Experience and ability to conduct field observations and collect data according to assigned protocols (this may include academic experience);
- Experience or training in the field identification of marine mammals, including the identification of behaviors;

• Sufficient training, orientation, or experience with the construction operation to provide for personal safety during observations;

• Writing skills sufficient to prepare a report of observations including but not limited to the number and species of marine mammals observed; dates and times when in-water construction activities were conducted; dates and times when in-water construction activities were suspended to avoid potential incidental injury from construction sound of marine mammals observed within a defined shutdown zone; and marine mammal behavior; and

• Ability to communicate orally, by radio or in person, with project personnel to provide real-time information on marine mammals observed in the area as necessary.

(2) Prior to the start of pile driving activity, the shutdown zone will be monitored for 15 minutes to ensure that it is clear of marine mammals. Pile driving will only commence once observers have declared the shutdown zone clear of marine mammals; animals will be allowed to remain in the shutdown zone (i.e., must leave of their own volition) and their behavior will be monitored and documented. The shutdown zone may only be declared clear, and pile driving started, when the entire shutdown zone is visible (i.e., when not obscured by dark, rain, fog, etc.). In addition, if such conditions should arise during impact pile driving that is already underway, the activity will be halted.

(3) If a marine mammal approaches or enters the shutdown zone during the course of pile driving operations, activity will be halted and delayed until either the animal has voluntarily left and been visually confirmed beyond the shutdown zone or 15 minutes have passed without re-detection of the animal. Monitoring will be conducted throughout the time required to drive a pile.

Special Conditions

The Navy has not requested the authorization of incidental take for Steller sea lions, killer whales, or gray whales (see discussion in Estimated Take by Incidental Harassment). Therefore, shutdown would be implemented in the event that a Steller sea lion or any cetacean is observed upon sighting within (or in anticipation of entering) the defined disturbance zone. As described later in this document, we believe that occurrence of any of these species during the in-water work window would be uncommon. For gray and killer whales, in particular, the occurrence of an individual or group would likely be highly noticeable and would attract significant attention in local media and with local whale watchers and interested citizens.

Prior to the start of pile driving on any day, the Navy will contact and/or review the latest sightings data from the Orca Network and/or Center for Whale Research to determine the location of the nearest marine mammal sightings. The Orca Sightings Network consists of a list of over 600 residents, scientists, and government agency personnel in the U.S. and Canada, and includes passive acoustic detections. The presence of a killer whale or gray whale in the southern reaches of Puget Sound would be a notable event, drawing public attention and media scrutiny. With this level of coordination in the region of activity, the Navy should be able to effectively receive real-time information on the presence or absence of whales, sufficient to inform the day's activities. Pile removal or driving would not occur if there was the risk of incidental harassment of a species for which incidental take was not authorized.

Prior to beginning pile driving on each day, monitors will scan the floating security barrier to ensure that no Steller sea lions are present. During vibratory pile removal, four land-based observers will monitor the area; these will be positioned with two at the pier work site, one at the eastern extent of the ZOI in the Manette neighborhood of Bremerton, and one at the southern extent of the ZOI near the Annapolis ferry landing in Port Orchard (please see Figure 1 of Appendix C in the Navy's application). Additionally, one vessel-based observer will travel through the monitoring area, completing an entire loop approximately every 30 minutes. If any killer whales, grey whales, or Steller sea lions are detected, activity will not begin or will shut down.

Timing Restrictions

In the project area, designated timing restrictions exist to avoid in-water work when salmonids and other spawning forage fish are likely to be present. The in-water work window is June 15–March 1. All in-water construction activities would occur only during daylight hours (sunrise to sunset).

Soft Start

The use of a soft-start procedure is believed to provide additional protection to marine mammals by warning or providing a chance to leave the area prior to the hammer operating at full capacity, and typically involves a requirement to initiate sound from vibratory hammers for fifteen seconds at reduced energy followed by a 30-second waiting period. This procedure is repeated two additional times. However, implementation of soft start for vibratory pile driving during previous pile driving work conducted by the Navy at another location has led to equipment failure and serious human safety concerns. Therefore, vibratory soft start is not required as a mitigation measure for this project, as we have determined it not to be practicable. We have further determined this measure unnecessary to providing the means of effecting the least practicable impact on marine mammals and their habitat. Prior to issuing any further IHAs to the Navy for pile driving activities in 2014 and beyond, we plan to facilitate consultation between the Navy and other practitioners (e.g., Washington State Department of Transportation and/or the California Department of Transportation) in order to determine whether the potentially significant human safety issue is inherent to implementation of the measure or is due to operator error. For impact driving, soft start will be required, and contractors will provide an initial set of three strikes from the impact hammer at 40 percent energy, followed by a 30-second waiting period, then two subsequent three-strike sets.

We have carefully evaluated the applicant's planned mitigation measures and considered a range of other measures in the context of ensuring that we prescribe the means of effecting the least practicable impact on the affected marine mammal species and stocks and their habitat. Our evaluation of potential measures included consideration of the following factors in relation to one another: (1) The manner in which, and the degree to which, the successful implementation of the measure is expected to minimize adverse impacts to marine mammals; (2) the proven or likely efficacy of the specific measure to minimize adverse impacts as planned; and (3) the practicability of the measure for applicant implementation.

Based on our evaluation of the applicant's planned measures, as well as any other potential measures that may be relevant to the specified activity, we have determined that these mitigation measures provide the means of effecting the least practicable impact on marine mammal species or stocks and their habitat, paying particular attention to rookeries, mating grounds, and areas of similar significance.

Monitoring and Reporting

In order to issue an ITA for an activity, section 101(a)(5)(D) of the MMPA states that we must set forth

''requirements pertaining to the monitoring and reporting of such taking''. The MMPA implementing regulations at 50 CFR 216.104(a)(13) indicate that requests for ITAs must include the suggested means of accomplishing the necessary monitoring and reporting that will result in increased knowledge of the species and of the level of taking or impacts on populations of marine mammals that are expected to be present in the action area. The Navy's planned monitoring and reporting is also described in their Marine Mammal Monitoring Plan (Appendix C of the Navy's application).

Acoustic Monitoring

The Navy will implement a sound source level verification study during the specified activities. Data will be collected in order to estimate airborne and underwater source levels for vibratory removal of timber piles and impact driving of concrete piles, with measurements conducted for ten piles of each type. Monitoring will include one underwater and one airborne monitoring position. These exact positions will be determined in the field during consultation with Navy personnel, subject to constraints related to logistics and security requirements. Reporting of measured sound level signals will include the average, minimum, and maximum rms value and frequency spectra for each pile monitored. Please see section 11.4.4 for details of the Navy's acoustic monitoring plan.

Visual Marine Mammal Observations

The Navy will collect sighting data and behavioral responses to construction for marine mammal species observed in the region of activity during the period of activity. All observers will be trained in marine mammal identification and behaviors and are required to have no other construction-related tasks while conducting monitoring. The Navy will monitor the shutdown zone and disturbance zone before, during, and after pile driving, with observers located at the best practicable vantage points. Based on our requirements, the Navy will implement the following procedures for pile driving:

- MMOs will be located at the best vantage point(s) in order to properly see the entire shutdown zone and as much of the disturbance zone as possible.
- During all observation periods, observers will use binoculars and the naked eye to search continuously for marine mammals.
- If the shutdown zones are obscured by fog or poor lighting conditions, pile driving at that location will not be initiated until that zone is visible. Should such conditions arise while impact driving is underway, the activity would be halted.
- The shutdown and disturbance zones around the pile will be monitored for the presence of marine mammals before, during, and after any pile driving or removal activity.

During vibratory pile removal, four observers will be deployed as described under the preceding mitigation discussion, including four land-based observers and one-vessel-based observer traversing the extent of the Level B harassment zone. During impact driving, one observer will be positioned at or near the pile to observe the much smaller disturbance zone.

Individuals implementing the monitoring protocol will assess its effectiveness using an adaptive approach. Monitoring biologists will use their best professional judgment throughout implementation and seek improvements to these methods when deemed appropriate. Any modifications to protocol will be coordinated between NMFS and the Navy.

Data Collection

We require that observers use approved data forms. Among other pieces of information, the Navy will record detailed information about any implementation of shutdowns, including the distance of animals to the pile and description of specific actions that ensued and resulting behavior of the animal, if any. In addition, the Navy will attempt to distinguish between the number of individual animals taken and the number of incidences of take. We require that, at a minimum, the following information be collected on the sighting forms:

- Date and time that monitored activity begins or ends;
- Construction activities occurring during each observation period;
- Weather parameters (e.g., percent cover, visibility);
- Water conditions (e.g., sea state, tide state);
- Species, numbers, and, if possible, sex and age class of marine mammals;
- Description of any observable marine mammal behavior patterns, including bearing and direction of travel, and if possible, the correlation to SPLs;
- Distance from pile driving activities to marine mammals and distance from the marine mammals to the observation point;
- Locations of all marine mammal observations;
- Other human activity in the area; and
- Description of implementation of mitigation measures (e.g., shutdown or delay).

Reporting

A draft report will be submitted to NMFS within 45 days of the completion of marine mammal and acoustic monitoring, or 60 days prior to the issuance of any subsequent IHA for this project, whichever comes first. The report will include marine mammal observations pre-activity, during-activity, and post-activity during pile driving days, and will also provide descriptions of any adverse responses to construction activities by marine mammals and a complete description of all mitigation shutdowns and the results of those actions and a refined take estimate based on the number of marine mammals observed during the course of construction. Reporting will also include the results of the acoustic monitoring effort. A final report will be prepared and submitted within 30 days following resolution of comments on the draft report.

Estimated Take by Incidental Harassment

With respect to the activities described here, the MMPA defines ''harassment'' as: ''any act of pursuit, torment, or annoyance which (i) has the potential to injure a marine mammal or marine mammal stock in the wild [Level A harassment]; or (ii) has the potential to disturb a marine mammal or marine mammal stock in the wild by causing disruption of behavioral patterns, including, but not limited to, migration, breathing, nursing, breeding, feeding, or sheltering [Level B harassment].'' All anticipated takes will be by Level B harassment, involving temporary changes in behavior. The planned mitigation and monitoring measures are expected to minimize the possibility of injurious or lethal takes such that take by Level A harassment, serious injury, or mortality is considered discountable. However, it is unlikely that injurious or lethal takes would occur even in the absence of the planned mitigation and monitoring measures.

If a marine mammal responds to a stimulus by changing its behavior (e.g., through relatively minor changes in locomotion direction/speed or vocalization behavior), the response may or may not constitute taking at the individual level, and is unlikely to affect the stock or the species as a whole. However, if a sound source displaces marine mammals from an important feeding or breeding area for a

prolonged period, impacts on animals or on the stock or species could potentially be significant (Lusseau and Bejder, 2007; Weilgart, 2007). Given the many uncertainties in predicting the quantity and types of impacts of sound on marine mammals, it is common practice to estimate how many animals are likely to be present within a particular distance of a given activity, or exposed to a particular level of sound. This practice potentially overestimates the numbers of marine mammals taken. In addition, it is often difficult to distinguish between the number of individuals harassed and incidences of harassment. In particular, for stationary activities, it is more likely that some smaller number of individuals may accrue a number of incidences of harassment per individual than for each incidence to accrue to a new individual, especially if those individuals display some degree of residency or site fidelity and the impetus to use the site (e.g., because of foraging opportunities) is stronger than the deterrence presented by the harassing activity.

The project area is not believed to be particularly important habitat for marine mammals, nor is it considered an area frequented by marine mammals, although harbor seals may be present year-round and sea lions are known to haul-out on man-made objects at the NBKB waterfront. Sightings of other species are rare. Therefore, behavioral disturbances that could result from anthropogenic sound associated with these activities are expected to affect only a relatively small number of individual marine mammals, although those effects could be recurring over the life of the project if the same individuals remain in the project vicinity. The Navy requested authorization for the incidental taking of small numbers of harbor seals and California sea lions in Sinclair Inlet and nearby waters that may be ensonified by project activities.

Marine Mammal Densities

For all species, the best scientific information available was used to derive density estimates and the maximum appropriate density value for each species was considered for use in the marine mammal take assessment calculations. These values, shown in Table 3 below, were derived or confirmed by experts convened to develop such information for use in Navy environmental compliance efforts in the Pacific Northwest, including Washington inland waters. The Navy Marine Species Density Database (NMSDD) density estimates were recently finalized, and use data from local marine mammal data sets, expert opinion, and survey data from Navy biologists and other agencies. A technical report documenting methodologies used to derive these densities and relevant background data is still in development (DoN, in prep.). These data are generally considered the best available information for Washington inland waters, except where specific local abundance information is available. At NBKB, the Navy began collecting opportunistic observational data of animals hauled-out on the floating security barrier. These surveys began in February 2010 and have been conducted approximately monthly from September 2010 through present (DoN, 2013). In addition, WSDOT recently conducted in-water pile driving over the course of multiple work windows as part of the Manette Bridge construction project in the nearby Port Washington Narrows. WSDOT conducted required marine mammal monitoring as part of this project (WSDOT, 2011, 2012; Rand, 2011). We determined, for both harbor seals and California sea lions, that these sources of local abundance information comprise the best available data for use in the take assessment calculations, as described below.

TABLE 3—MAXIMUM MARINE MAMMAL DENSITY ESTIMATES FOR NBKB (SINCLAIR INLET)

Species	Density (Sinclair Inlet), #/km²
Harbor seal	0.4267
California sea lion	0.13
Steller sea lion	0.037
Transient killer whale	0.0024
Gray whale	0.0005

Description of Take Calculation

The take calculations presented here rely on the best data currently available for marine mammal populations in Puget Sound. The methodology for estimating take was described in detail in the FR notice (78 FR 56659; September 13, 2013). The ZOI impact area is the estimated range of impact to the sound criteria. The distances specified in Table 1 were used to calculate ZOIs around each pile. The ZOI impact area calculations took into consideration the possible affected area with attenuation due to the topographical constraints of Sinclair Inlet, and the radial distances to thresholds are not always reached.

While pile driving can occur any day, and the analysis is conducted on a per day basis, only a fraction of that time (typically a matter of hours on any given day) is actually spent pile driving. The exposure assessment methodology is an estimate of the numbers of individuals exposed to the effects of pile driving activities exceeding NMFS-established thresholds. Of note in these exposure estimates, mitigation methods (i.e., visual monitoring and the use of shutdown zones; soft start for impact pile driving) were not quantified within the assessment and successful implementation of mitigation is not reflected in exposure estimates. In addition, equating exposure with response (i.e., a behavioral response meeting the definition of take under the MMPA) is simplistic and conservative assumption. For these reasons, results from this acoustic exposure assessment likely overestimate take estimates to some degree. Species-specific information and considerations in the take estimation process are detailed here.

Harbor Seal—While no harbor seal haul-outs are present in the action area or in the immediate vicinity of NBKB, haul-outs are present elsewhere in Sinclair Inlet and in other nearby waters and harbor seals may haul out on available objects opportunistically. Use of the NMSDD density value (0.4267 animals/km²; corrected for proportion of animals hauled-out at any given time) would result in an estimate of 2–3 incidences of harassment per day; it is likely that this would not adequately represent the potential presence of harbor seals given observed occurrence at other nearby construction projects. Marine mammal monitoring conducted during pile driving work on the Manette Bridge showed variable numbers of harbor seals (but generally greater than indicated by the NMSDD density). During the first year of construction (in-water work window only), an average of 3.7 harbor seals were observed per day of monitoring with a maximum of 59 observed in October 2011 (WSDOT, 2011; Rand, 2011). During the most recent construction period (July–November 2012), an average of eleven harbor seals per monitoring day was observed, though some animals were likely counted multiple times (WSDOT, 2012). Given the potential for similar occurrence of harbor seals in the vicinity of NBKB during the in-water construction period, we determined it appropriate to use this most recent, local abundance information in the take assessment calculation.

California Sea Lion—Similar to harbor seals, it is not likely that use of the NMSDD density value for California sea lions (0.13 animals/km²) would adequately represent their potential occurrence in the project area. California sea lions are commonly

observed hauled out on the floating security barrier which is in close proximity to Pier 6; counts from 34 surveys (March 2010–June 2013) showed an average of 42 individuals per survey day (range 0–144; DoN, 2013). These counts represent the best local abundance data available and were used in the take assessment calculation.

Steller Sea Lion—No Steller sea lion haul-outs are present within or near the action area, and Steller sea lions have not been observed during Navy waterfront surveys or during monitoring associated with the Manette Bridge construction project. It is assumed that the possibility exists that a Steller sea lion could occur in the project area, but there is no known attractant in Sinclair Inlet, which is a relatively muddy, industrialized area, and the floating security barrier that California sea lions use as an opportunistic haul-out cannot generally accommodate the larger adult Steller sea lions (juveniles could haul-out on the barrier). Use of the NMSDD density estimate (0.037 animals/km^2) results in an estimate of zero exposures, and there are no existing data to indicate that Steller sea lions would occur more frequently locally. Therefore, the Navy did not request the authorization of incidental take for Steller sea lions and we have not issued such authorization. The Navy would not begin activity or would shut down upon report of a Steller sea lion present within or approaching the relevant ZOI.

Killer Whale—Transient killer whales are rarely observed in the project area, with records since 2002 showing one group transiting through the area in May 2004 and a subsequent, similar observation in May 2010. No other observations have occurred during Navy surveys or during project monitoring for Manette Bridge. Use of the NMSDD density estimate (0.0024 animals/km^2) results in an estimate of zero exposures, and there are no existing data to indicate that killer whales would occur more frequently locally. Therefore, the Navy did not request the authorization of incidental take for transient killer whales and we have not issued such authorization. The Navy would not begin activity or would shut down upon report of a killer whale present within or approaching the relevant ZOI.

Gray Whale—Gray whales are rarely observed in the project area, and the majority of in-water work would occur when whales are relatively less likely to occur (i.e., outside of March–May). Since 2002 and during the in-water work window, there are observational records of three whales (all during winter 2008–09) and a stranding record of a fourth whale (January 2013). No other observations have occurred during Navy surveys or during project monitoring for Manette Bridge. Use of the NMSDD density estimate (0.0005 animals/km^2) results in an estimate of zero exposures, and there are no existing data to indicate that gray whales would occur more frequently locally. Therefore, the Navy did not request the authorization of incidental take for gray whales and we have not issued such authorization. The Navy would not begin activity or would shut down upon report of a gray whale present within or approaching the relevant ZOI.

TABLE 4. NUMBER OF POTENTIAL INCIDENTAL TAKES OF MARINE MAMMALS

Species	Exposure estimate
Harbor seal[1]	715
California sea lion[2]	2,730
Steller sea lion	0
Transient killer whale	0
Gray whale	0

[1] Use of NMSDD density results in estimated range of potential exposures of 130–195. Local abundance data were used in exposure assessment, i.e., 11 harbor seals potentially exposed per day for 65 days of pile driving.

[2] Use of NMSDD density results in estimated potential exposures of 65. Local abundance data were used in exposure assessment, i.e., 42 California sea lions potentially exposed per day for 65 days of pile driving.

For the Steller sea lion, transient killer whale, and gray whale, available information indicates that presence of these species is sufficiently rare to make exposure unlikely. Further, the Navy's monitoring plan further mitigates any such possibility to the point that we consider it discountable and have not authorized incidental take for these three species.

Negligible Impact and Small Numbers Analyses and Determinations

NMFS has defined ''negligible impact'' in 50 CFR 216.103 as ''. . . an impact resulting from the specified activity that cannot be reasonably expected to, and is not reasonably likely to, adversely affect the species or stock through effects on annual rates of recruitment or survival.'' In making a negligible impact determination, we considers a variety of factors, including but not limited to: (1) The number of anticipated mortalities; (2) the number and nature of anticipated injuries; (3) the number, nature, intensity, and duration of Level B harassment; and (4) the context in which the take occurs.

Small Numbers Analysis

The number of incidences of take authorized for harbor seals and California sea lions would be considered small relative to the relevant stocks or populations (less than five percent and one percent, respectively) even if each estimated taking occurred to a new individual. This is an extremely unlikely scenario as, for pinnipeds in estuarine/inland waters, there is likely to be some overlap in individuals present day-to-day.

Negligible Impact Analysis

Pile driving activities associated with the Navy's pier maintenance project, as outlined previously, have the potential to disturb or displace marine mammals. Specifically, the specified activities may result in take, in the form of Level B harassment (behavioral disturbance) only, from underwater sounds generated from pile driving and removal. Potential takes could occur if individuals of these species are present in the ensonified zone when the specified activity is occurring.

No injury, serious injury, or mortality is anticipated given the nature of the activity and measures designed to minimize the possibility of injury to marine mammals. The potential for these outcomes is minimized through the construction method and the implementation of the planned mitigation measures. Specifically, piles will be removed via vibratory means—an activity that does not have the potential to cause injury to marine mammals due to the relatively low source levels produced (less than 180 dB) and the lack of potentially injurious source characteristics—and, while impact pile driving produces short, sharp pulses with higher peak levels and much sharper rise time to reach those peaks, only small diameter concrete piles are planned for impact driving. Predicted source levels for such impact driving events are significantly lower than those typical of impact driving of steel piles and/or larger diameter piles. In addition, implementation of soft start and shutdown zones significantly reduces any possibility of injury. Given sufficient ''notice'' through use of soft start (for impact driving), marine mammals are expected to move away from a sound source that is annoying prior to its becoming potentially injurious. Environmental conditions in Sinclair Inlet are expected to generally be good, with calm sea states, although Sinclair Inlet waters may be more turbid than those further north in Puget Sound or in Hood Canal. Nevertheless, we

expect conditions in Sinclair Inlet to allow a high marine mammal detection capability for the trained observers required, enabling a high rate of success in implementation of shutdowns to avoid injury, serious injury, or mortality. In addition, the topography of Sinclair Inlet should allow for placement of observers sufficient to detect cetaceans, should any occur (see Figure 1 of Appendix C in the Navy's application).

Effects on individuals that are taken by Level B harassment, on the basis of reports in the literature as well as monitoring from other similar activities, will likely be limited to reactions such as increased swimming speeds, increased surfacing time, or decreased foraging (if such activity were occurring) (*e.g.,* Thorson and Reyff, 2006; HDR, Inc., 2012). Most likely, individuals will simply move away from the sound source and be temporarily displaced from the areas of pile driving, although even this reaction has been observed primarily only in association with impact pile driving. The pile driving activities analyzed here are similar to, or less impactful than, numerous other construction activities conducted in San Francisco Bay and in the Puget Sound region, which have taken place with no reported injuries or mortality to marine mammals, and no known long-term adverse consequences from behavioral harassment. Repeated exposures of individuals to levels of sound that may cause Level B harassment are unlikely to result in hearing impairment or to significantly disrupt foraging behavior. Thus, even repeated Level B harassment of some small subset of the overall stock is unlikely to result in any significant realized decrease in viability for the affected individuals, and thus would not result in any adverse impact to the stock as a whole. Level B harassment will be reduced to the level of least practicable impact through use of mitigation measures described herein and, if sound produced by project activities is sufficiently disturbing, animals are likely to simply avoid the area—which is not believed to provide any habitat of special significance—while the activity is occurring.

In summary, this negligible impact analysis is founded on the following factors: (1) The possibility of injury, serious injury, or mortality may reasonably be considered discountable; (2) the anticipated incidences of Level B harassment consist of, at worst, temporary modifications in behavior; (3) the absence of any significant habitat within the project area, including rookeries, significant haul-outs, or known areas or features of special significance for foraging or reproduction; (4) the presumed efficacy of the planned mitigation measures in reducing the effects of the specified activity to the level of least practicable impact. In addition, neither of these stocks are listed under the ESA or considered depleted under the MMPA. In combination, we believe that these factors, as well as the available body of evidence from other similar activities, demonstrate that the potential effects of the specified activity will have only short-term effects on individuals. The specified activity is not expected to impact rates of recruitment or survival and will therefore not result in population-level impacts.

Determinations

The number of marine mammals actually incidentally harassed by the project will depend on the distribution and abundance of marine mammals in the vicinity of the activity. However, we find that the number of potential takings authorized (by level B harassment only), which we consider to be a conservative, maximum estimate, is small relative to the relevant regional stock or population numbers, and that the effect of the activity will be mitigated to the level of least practicable impact through implementation of the mitigation and monitoring measures described previously. Based on the analysis contained herein of the likely effects of the specified activity on marine mammals and their habitat, we find that the total taking from the activity will have a negligible impact on the affected species or stocks.

Impact on Availability of Affected Species for Taking for Subsistence Uses

There are no relevant subsistence uses of marine mammals implicated by this action. Therefore, we have determined that the total taking of affected species or stocks will not have an unmitigable adverse impact on the availability of such species or stocks for taking for subsistence purposes.

Endangered Species Act (ESA)

There are no ESA-listed marine mammals expected to occur in the action area. Therefore, the Navy has not requested authorization of the incidental take of ESA-listed species and no such authorization is issued; therefore, no consultation under the ESA is required.

National Environmental Policy Act (NEPA)

In compliance with the National Environmental Policy Act of 1969 (42 U.S.C. 4321 *et seq.*), as implemented by the regulations published by the Council on Environmental Quality (40 CFR parts 1500–1508), the Navy prepared an Environmental Assessment (EA) to consider the direct, indirect and cumulative effects to the human environment resulting from the pier maintenance project. NMFS made the Navy's EA available to the public for review and comment, in relation to its suitability for adoption by NMFS in order to assess the impacts to the human environment of issuance of an IHA to the Navy. Also in compliance with NEPA and the CEQ regulations, as well as NOAA Administrative Order 216–6, NMFS has reviewed the Navy's EA, determined it to be sufficient, and adopted that EA and signed a Finding of No Significant Impact (FONSI) on November 8, 2013. The Navy's EA and NMFS' FONSI for this action may be found at *http://www.nmfs.noaa.gov/pr/permits/incidental.htm.*

Authorization

As a result of these determinations, we have issued an IHA to the Navy to conduct the specified activities at Naval Base Kitsap Bremerton, WA for the period from December 1, 2013, through March 1, 2014, provided the previously described mitigation, monitoring, and reporting requirements are incorporated.

Dated: November 15, 2013.

Helen M. Golde,

Deputy Director, Office of Protected Resources, National Marine Fisheries Service.

[FR Doc. 2013–27867 Filed 11–20–13; 8:45 am]

BILLING CODE 3510–22–P

BUREAU OF CONSUMER FINANCIAL PROTECTION

Privacy Act of 1974, as Amended

AGENCY: Bureau of Consumer Financial Protection.

ACTION: Notice of Proposed Privacy Act System of Records.

SUMMARY: In accordance with the Privacy Act of 1974, as amended, the Bureau of Consumer Financial Protection, hereinto referred to as the Consumer Financial Protection Bureau (''CFPB'' or the ''Bureau''), gives notice of the establishment of a Privacy Act System of Records.

DATES: Comments must be received no later than December 23, 2013. The new system of records will be effective December 31, 2013, unless the comments received result in a contrary determination.

ADDRESSES: You may submit comments by any of the following methods:

- *Electronic: privacy@cfpb.gov.*
- *Mail/Hand Delivery/Courier:* Claire Stapleton, Chief Privacy Officer, Consumer Financial Protection Bureau, 1700 G Street NW., Washington, DC 20552.

Comments will be available for public inspection and copying at 1700 G Street NW., Washington, DC 20552 on official business days between the hours of 10 a.m. and 5 p.m. Eastern Time. You can make an appointment to inspect comments by telephoning (202) 435–7220. All comments, including attachments and other supporting materials, will become part of the public record and subject to public disclosure. You should submit only information that you wish to make available publicly.

FOR FURTHER INFORMATION CONTACT: Claire Stapleton, Chief Privacy Officer, Consumer Financial Protection Bureau, 1700 G Street NW., Washington, DC 20552, (202) 435–7220.

SUPPLEMENTARY INFORMATION: The Dodd-Frank Wall Street Reform and Consumer Protection Act (the ''Act''), Public Law 111–203, Title X, established the CFPB to administer and enforce federal consumer financial law. The new system of records described in this notice ''CFPB.026—Biographies'' will collect biographical information of CFPB employees, detailees, and contractors in order to provide information to Bureau staff, appropriate agencies and entities, the media, and the public in order for the Bureau to carry out its responsibilities. The CFPB will maintain control over the records covered by this notice.

The report of the new system of records has been submitted to the Committee on Oversight and Government Reform of the House of Representatives, the Committee on Homeland Security and Governmental Affairs of the Senate, and the Office of Management and Budget, pursuant to Appendix I to OMB Circular A–130, ''Federal Agency Responsibilities for Maintaining Records About Individuals,'' dated November 30, 2000,[1] and the Privacy Act, 5 U.S.C. 552a(r).

[1] Although pursuant to section 1017(a)(4)(E) of the Consumer Financial Protection Act, Public Law 111–203, the CFPB is not required to comply with OMB-issued guidance, it voluntarily follows OMB privacy-related guidance as a best practice and to facilitate cooperation and collaboration with other agencies.

The system of records entitled ''CFPB.026—Biographies'' is published in its entirety below.

Claire Stapleton,

Chief Privacy Officer, Bureau of Consumer Financial Protection.

CFPB.026

SYSTEM NAME:

Biographies

SYSTEM LOCATION:

Consumer Financial Protection Bureau, 1700 G Street NW., Washington, DC 20552.

CATEGORIES OF INDIVIDUALS COVERED BY THE SYSTEM:

Individuals covered by this system include: Any CFPB personnel, including federal employees, detailees, and contractors, whose biographical information is collected and distributed by CFPB. The system may also contain information about individuals who have collaborated with, or have joint authorship of publications or presentations with CFPB personnel.

CATEGORIES OF RECORDS IN THE SYSTEM:

Information contained in this system includes: Individuals' (1) name; (2) photograph; (3) professional contact information; (4) work history and experience; (5) education background; (6) fields of interest; (7) military experience, if applicable; (8) civic duties; (9) honors or awards; (10) membership in professional societies; (11) publications authored and speeches or presentations given; and (12) other biographical information upon agreement by the individual that may be collected and distributed to Bureau staff, appropriate agencies and entities, the media, and the public in order for the Bureau to carry out its responsibilities.

AUTHORITY FOR MAINTENANCE OF THE SYSTEM:

Public Law 111–203, Title X, Sections 1011, 1012, 1013, codified at 12 U.S.C. §§ 5491, 5492, 5493.

PURPOSE(S):

Records in this system are collected to enable the CFPB to collect and distribute biographical information of CFPB personnel, including employees, detailees, and contractors, in order to distribute information to Bureau staff, appropriate agencies and entities, the media, and the public.

ROUTINE USES OF RECORDS MAINTAINED IN THE SYSTEM, INCLUDING CATEGORIES OF USERS AND THE PURPOSES OF SUCH USES:

These records may be disclosed, consistent with the CFPB Disclosure of Records and Information Rules, promulgated at 12 CFR part 1070 *et seq.,* to:

(1) Appropriate agencies, entities, and persons when: (a) the CFPB suspects or has confirmed that the security or confidentiality of information in the system of records has been compromised; (b) the CFPB has determined that, as a result of the suspected or confirmed compromise, there is a risk of harm to economic or property interests, identity theft or fraud, or harm to the security or integrity of this system or other systems or programs (whether maintained by the CFPB or another agency or entity) that rely upon the compromised information; and (c) the disclosure made to such agencies, entities, and persons is reasonably necessary to assist in connection with the CFPB's efforts to respond to the suspected or confirmed compromise and prevent, minimize, or remedy such harm;

(2) Another federal or state agency to (a) permit a decision as to access, amendment or correction of records to be made in consultation with or by that agency, or (b) verify the identity of an individual or the accuracy of information submitted by an individual who has requested access to or amendment or correction of records;

(3) To the Office of the President in response to an inquiry from that office made at the request of the subject of a record or a third party on that person's behalf;

(4) Congressional offices in response to an inquiry made at the request of the individual to whom the record pertains;

(5) Contractors, agents, or other authorized individuals performing work on a contract, service, cooperative agreement, job, or other activity on behalf of the CFPB or Federal Government and who have a need to access the information in the performance of their duties or activities;

(6) The U.S. Department of Justice (''DOJ'') for its use in providing legal advice to the CFPB or in representing the CFPB in a proceeding before a court, adjudicative body, or other administrative body, where the use of such information by the DOJ is deemed by the CFPB to be relevant and necessary to the advice or proceeding, and such proceeding names as a party in interest:

(a) The CFPB;

(b) Any employee of the CFPB in his or her official capacity;

(c) Any employee of the CFPB in his or her individual capacity where DOJ has agreed to represent the employee; or

(d) The United States, where the CFPB determines that litigation is likely

to affect the CFPB or any of its components;

(7) To audiences attending a particular event or meeting when the biographies of speakers are used as background in introductions or other informational material; and

(8) To the news media and the public, with the approval of the Chief Privacy Officer in consultation with counsel, when necessary for recruiting, or providing information relevant to products authored by CFPB personnel.

POLICIES AND PRACTICES FOR STORING, RETRIEVING, ACCESSING, RETAINING, AND DISPOSING OF RECORDS IN THE SYSTEM:

STORAGE:

Paper and electronic records.

RETRIEVABILITY:

Records are retrievable by a variety of fields including, without limitation, name, work experience, educational background, publications and presentations, or by some combination thereof.

SAFEGUARDS:

Access to electronic records is restricted to authorized personnel who have been issued non-transferrable access codes and passwords. Other records are maintained in locked file cabinets or rooms with access limited to those personnel whose official duties require access.

RETENTION AND DISPOSAL:

The CFPB will manage all computer and paper files in the system as permanent records until the disposition schedule for these records is approved by the National Archives and Records Administration, at which time, the CFPB will dispose of such files in accordance with the schedule.

SYSTEM MANAGER(S) AND ADDRESS:

Consumer Financial Protection Bureau, Chief Operating Officer, 1700 G Street NW., Washington, DC 20552.

NOTIFICATION PROCEDURE:

Individuals seeking notification and access to any record contained in this system of records, or seeking to contest its content, may inquire in writing in accordance with instructions appearing in Title 12, Chapter 10 of the CFR, ''Disclosure of Records and Information.'' Address such requests to: Chief Privacy Officer, Bureau of Consumer Financial Protection, 1700 G Street NW., Washington, DC 20552.

RECORD ACCESS PROCEDURES:

See ''Notification Procedures'' above.

CONTESTING RECORD PROCEDURES:

See ''Notification Procedures'' above.

RECORD SOURCE CATEGORIES:

Information in this system is obtained from the individual personnel and co-workers.

EXEMPTIONS CLAIMED FOR THE SYSTEM:

None.

[FR Doc. 2013–27977 Filed 11–20–13; 8:45 am]

BILLING CODE 4810–AM–P

DEPARTMENT OF DEFENSE

Office of the Secretary

Defense Science Board; Notice of Advisory Committee Meetings

AGENCY: Department of Defense.

ACTION: Notice of advisory committee meetings.

SUMMARY: The Defense Science Board will meet in closed session on December 18–19, 2013, from 8:00 a.m. to 5:00 p.m. at the Pentagon, Room 3E863, Washington, DC.

DATES: December 18–19, 2013, from 8:00 a.m. to 5:00 p.m.

ADDRESSES: The Pentagon, Room 3E863, Washington, DC.

FOR FURTHER INFORMATION CONTACT: Ms. Debra Rose, Executive Officer, Defense Science Board, 3140 Defense Pentagon, Room 3B888A, Washington, DC 20301–3140, via email at *debra.a.rose20.civ@mail.mil,* or via phone at (703) 571–0084.

SUPPLEMENTARY INFORMATION:

This meeting is being held under the provisions of the Federal Advisory Committee Act of 1972 (5 U.S.C., Appendix, as amended), the Government in the Sunshine Act of 1976 (5 U.S.C. 552b, as amended), and 41 CFR § 102–3.150.

The mission of the Defense Science Board is to advise the Secretary of Defense and the Under Secretary of Defense for Acquisition, Technology & Logistics on scientific and technical matters as they affect the perceived needs of the Department of Defense. At this meeting, the Board will discuss interim finding and recommendations resulting from ongoing Task Force activities. The Board will also discuss plans for future consideration of scientific and technical aspects of specific strategies, tactics, and policies as they may affect the U.S. national defense posture and homeland security.

In accordance with section 10(d) of the Federal Advisory Committee Act, Public Law 92–463, as amended (5 U.S.C. App. 2) and 41 CFR 102–3.155, the Department of Defense has determined that the Defense Science Board quarterly meeting for December 18–19, 2013, will be closed to the public. Specifically, the Under Secretary of Defense (Acquisition, Technology, and Logistics), in consultation with the DoD Office of General Counsel, has determined in writing that all sessions of the meeting for December 18–19, 2013, will be closed to the public because it will consider matters covered by 5 U.S.C. §§ 552b(c)(1) and (4).

Interested persons may submit a written statement for consideration by the Defense Science Board. Individuals submitting a written statement must submit their statement to the Designated Federal Official at the address detailed in **FOR FURTHER INFORMATION CONTACT**, at any point, however, if a written statement is not received at least 10 calendar days prior to the meeting, which is the subject of this notice, then it may not be provided to or considered by the Defense Science Board. The Designated Federal Official will review all timely submissions with the Defense Science Board Chairperson, and ensure they are provided to members of the Defense Science Board before the meeting that is the subject of this notice.

Dated: November 18, 2013.

Aaron Siegel,

Alternate OSD Federal Register Liaison Officer, Department of Defense.

[FR Doc. 2013–27951 Filed 11–20–13; 8:45 am]

BILLING CODE 5001–06–P

DEPARTMENT OF DEFENSE

Department of the Army

[Docket ID: USA–2013–0037]

Proposed Collection; Comment Request

AGENCY: Department of the Army, DoD.

ACTION: Notice.

SUMMARY: In compliance with Section 3506(c)(2)(A) of the *Paperwork Reduction Act of 1995,* the Department of the Army announces a proposed public information collection and seeks public comment on the provisions thereof. Comments are invited on: (a) Whether the proposed collection of information is necessary for the proper performance of the functions of the agency, including whether the information shall have practical utility; (b) the accuracy of the agency's estimate of the burden of the proposed information collection; (c) ways to enhance the quality, utility, and clarity of the information to be collected; and (d) ways to minimize the burden of the information collection on respondents, including through the use of automated

collection techniques or other forms of information technology.

DATES: Consideration will be given to all comments received by January 21, 2014.

ADDRESSES: You may submit comments, identified by docket number and title, by any of the following methods:

• *Federal eRulemaking Portal: http://www.regulations.gov.* Follow the instructions for submitting comments.

• *Mail:* Federal Docket Management System Office, 4800 Mark Center Drive, East Tower, Suite 02G09, Alexandria, VA 22350–3100.

Instructions: All submissions received must include the agency name, docket number and title for this **Federal Register** document. The general policy for comments and other submissions from members of the public is to make these submissions available for public viewing on the Internet at *http://www.regulations.gov* as they are received without change, including any personal identifiers or contact information.

FOR FURTHER INFORMATION CONTACT: To request more information on this proposed information collection or to obtain a copy of the proposal and associated collection instruments, please write to the Institute for Water Resources, Navigation and Civil Works Decision Support Center, 7701 Telegraph Road, Alexandria, VA 22315–3868 ATTN: Virginia R. Pankow or call 703–428–9047.

SUPPLEMENTARY INFORMATION:

Title; Associated Form; and OMB Number: Lock Performance Monitoring System (LPMS) Waterway Traffic Report; ENG FORM 3102C and 3102D; OMB Control, Number 0710–0008.

Needs and Uses: The U.S. Army Corps of Engineers utilizes the data collected to monitor and analyze the use and operation of federally owned and operated locks. General data of vessel identification, tonnage and commodities are supplied by the master of vessels at all locks owned and operated by the U.S. Army Corps of Engineers. The information is used for sizing and scheduling replacements, the timing of rehabilitation or maintenance actions, and the setting of operation procedures and closures for locks and canals.

Affected Public: Business or other for profit.

Annual Burden Hours: 26,312.

Number of Respondents: 6,529.

Responses per Respondent: 93.

Average Burden per Response: 2.6 Minutes.

Frequency: On occasion.

Respondents are vessel operators who provide the vessel identification, tonnage and community information as stipulated on ENG Form 3102C, Waterway Traffic Report—Vessel Log or ENG form 3102D, Waterway Traffic Report—Detail Vessel Log. The information is applied to navigation system management to identify and prioritize lock maintenance, rehabilitation, or replacement. It is also used to measure waterway performance and the level of service of the national waterway systems.

Dated: November 15, 2013.

Aaron Siegel,

Alternate OSD Federal Register Liaison Officer, Department of Defense.

[FR Doc. 2013–27876 Filed 11–20–13; 8:45 am]

BILLING CODE 5001–06–P

DEPARTMENT OF DEFENSE

Department of the Army

[Docket ID: USA–2013–0040]

Proposed Collection; Comment Request

AGENCY: Office of the Administrative Assistant to the Secretary of the Army (OAA–RPA), DoD.

ACTION: Notice.

SUMMARY: In compliance with Section 3506(c)(2)(A) of the *Paperwork Reduction Act of 1995,* the Department of the Army announces a proposed public information collection and seeks public comment on the provisions thereof. Comments are invited on: (a) Whether the proposed collection of information is necessary for the proper performance of the functions of the agency, including whether the information shall have practical utility; (b) the accuracy of the agency's estimate of the burden of the proposed information collection; (c) ways to enhance the quality, utility, and clarity of the information to be collected; and (d) ways to minimize the burden of the information collection on respondents, including through the use of automated collection techniques or other forms of information technology.

DATES: Consideration will be given to all comments received by January 21, 2014.

ADDRESSES: You may submit comments, identified by docket number and title, by any of the following methods:

• *Federal eRulemaking Portal: http://www.regulations.gov.* Follow the instructions for submitting comments.

• *Mail:* Federal Docket Management System Office, 4800 Mark Center Drive, East Tower, Suite 02G09, Alexandria, VA 22350–3100.

Instructions: All submissions received must include the agency name, docket number and title for this **Federal Register** document. The general policy for comments and other submissions from members of the public is to make these submissions available for public viewing on the Internet at *http://www.regulations.gov* as they are received without change, including any personal identifiers or contact information.

FOR FURTHER INFORMATION CONTACT: To request more information on this proposed information collection or to obtain a copy of the proposal and associated collection instruments, please write to the U.S. Army ROTC Cadet Command, ATTN: ATCC–OP–I–S (Iantha Spalding), 55 Patch Road, Building 56, Fort Monroe, Virginia 23651–5238, or call the Department of the Army Reports Clearance Officer at (703) 428–6440.

SUPPLEMENTARY INFORMATION:

Title; Associated Form; and OMB Number: U.S. Army ROTC 4-Year College Scholarship Application (For High School Students); CC Form 114–R; OMB Control Number 0702–0073.

Needs and Uses: The Army ROTC Program produces approximately 80 percent of the newly commissioned officers for the U.S. Army. The Army ROTC scholarship is an incentive to attract men and women to pursue educational degrees in the academic disciplines required by the Army. The information is collected annually.

Affected Public: Individuals or households.

Annual Burden Hours: 20,351.

Number of Respondents: 13,508.

Responses per Respondent: 1.

Average Burden per Response: 45 minutes.

Frequency: Annually.

The applications are available to high school students. Once the applications for U.S. Army ROTC 4-Year College Scholarship Program are completed, they are submitted to Headquarters, Cadet Command for review, screening, and selection of scholarship recipients. The application and information provides the basis for the scholarship award.

Dated: November 15, 2013.

Aaron Siegel,

Alternate OSD Federal Register Liaison Officer, Department of Defense.

[FR Doc. 2013–27888 Filed 11–20–13; 8:45 am]

BILLING CODE 5001–06–P

DEPARTMENT OF DEFENSE

Department of the Army

[Docket ID USA–2013–0039]

Proposed Collection; Comment Request

AGENCY: Department of the Army, DoD.

ACTION: Notice.

SUMMARY: In compliance with Section 3506(c)(2)(A) of the *Paperwork Reduction Act of 1995,* the Department of the Army announces a proposed public information collection and seeks public comment on the provisions thereof. Comments are invited on: (a) Whether the proposed collection of information is necessary for the proper performance of the functions of the agency, including whether the information shall have practical utility; (b) the accuracy of the agency's estimate of the burden of the proposed information collection; (c) ways to enhance the quality, utility, and clarity of the information to be collected; and (d) ways to minimize the burden of the information collection on respondents, including through the use of automated collection techniques or other forms of information technology.

DATES: Consideration will be given to all comments received by January 21, 2014.

ADDRESSES: You may submit comments, identified by docket number and title, by any of the following methods:

- *Federal eRulemaking Portal: http://www.regulations.gov.* Follow the instructions for submitting comments.
- *Mail:* Federal Docket Management System Office, 4800 Mark Center Drive, East Tower, Suite 02G09, Alexandria, VA 22350–3100.

Instructions: All submissions received must include the agency name, docket number and title for this **Federal Register** document. The general policy for comments and other submissions from members of the public is to make these submissions available for public viewing on the Internet at *http://www.regulations.gov* as they are received without change, including any personal identifiers or contact information.

Any associated form(s) for this collection may be located within this same electronic docket and downloaded for review/testing. Follow the instructions at *http://www.regulations.gov* for submitting comments. Please submit comments on any given form identified by docket number, form number, and title.

FOR FURTHER INFORMATION CONTACT: To request more information on this proposed information collection or to obtain a copy of the proposal and associated collection instruments, please write to the Department of the Army, U.S. Army Corps of Engineers, Institute for Water Resources (IWR), Waterborne Commerce Statistics Center, P.O. Box 61280, New Orleans, LA 70161, ATTN: CEIWR–NDC–C (David L. Penick, CEIWR–NDC–C), or call Department of the Army reports clearance officer at (703) 428–6440.

SUPPLEMENTARY INFORMATION:

Title; Associated Form; and OMB Number: Terminal and Transfer Facilities Descriptions, IWR Forms 1–9; OMB Control Number 0710–0007.

Needs and Uses: Data gathered and published as one of the 56 Port Series Reports, relating to terminals, transfer facilities, storage facilities, and intermodal transportation. This information is used in navigation, planning, safety, National security, emergency operations, and general interest studies and activities. Respondents are terminal and transfer facility operators. This data is essential to the Waterborne Commerce Statistics Center in exercising their enforcement and quality control responsibilities in the collection of data from vessel reporting companies.

Affected Public: Business or other for profit; Federal Government; and State, Local or Tribal government.

Annual Burden Hours: 316.

Number of Respondents: 1,262.

Responses per Respondent: 1.

Average Burden per Response: 15 minutes.

Frequency: Annually.

The Federal Emergency Management Agency (FEMA) has used the port facility data in rapidly identifying affected businesses in need of assistance during the flooding events. Military interest of the Army, Navy, and Coast Guard are met with information on intermodal connections, terminal transfer and storage facilities and loading equipment capabilities in the event of rapid military deployment, or National emergencies. The Army's Military Surface and Deployment and Distribution Command (SDDC) use the information as a baseline for updating their ''Ports for National Defense'' mission.

Dated: November 15, 2013.

Aaron Siegel,

Alternate OSD Federal Register Liaison Officer, Department of Defense.

[FR Doc. 2013–27881 Filed 11–20–13; 8:45 am]

BILLING CODE 5001–06–P

DEPARTMENT OF DEFENSE

Department of the Army

[Docket ID: USA–2013–0038]

Proposed Collection; Comment Request

AGENCY: Department of the Army, DoD.

ACTION: Notice.

SUMMARY: In compliance with Section 3506(c)(2)(A) of the *Paperwork Reduction Act of 1995,* the Department of the Army announces a proposed public information collection and seeks public comment on the provisions thereof. Comments are invited on: (a) Whether the proposed collection of information is necessary for the proper performance of the functions of the agency, including whether the information shall have practical utility; (b) the accuracy of the agency's estimate of the burden of the proposed information collection; (c) ways to enhance the quality, utility, and clarity of the information to be collected; and (d) ways to minimize the burden of the information collection on respondents, including through the use of automated collection techniques or other forms of information technology.

DATES: Consideration will be given to all comments received by January 21, 2014.

ADDRESSES: You may submit comments, identified by docket number and title, by any of the following methods:

- *Federal eRulemaking Portal: http://www.regulations.gov.* Follow the instructions for submitting comments.
- *Mail:* Federal Docket Management System Office, 4800 Mark Center Drive, East Tower, Suite 02G09, Alexandria, VA 22350–3100.

Instructions: All submissions received must include the agency name, docket number and title for this **Federal Register** document. The general policy for comments and other submissions from members of the public is to make these submissions available for public viewing on the Internet at *http://www.regulations.gov* as they are received without change, including any personal identifiers or contact information.

Any associated form(s) for this collection may be located within this same electronic docket and downloaded for review/testing. Follow the instructions at *http://www.regulations.gov* for submitting comments. Please submit comments on any given form identified by docket number, form number, and title.

FOR FURTHER INFORMATION CONTACT: To request more information on this

proposed information collection or to obtain a copy of the proposal and associated collection instruments, please write to the Department of the Army, Army Safety Office, Chief of Staff DACS–SF, 2221 S. Clark Street, Room 1113, Arlington, VA 22202 Attn: Mr. Greg Komp, telephone (703) 601–2405.

SUPPLEMENTARY INFORMATION:

Title; Associated Form; and OMB Number: Letter Permit for Non-Army Agency Radiation Sources on Army Land; OMB Control Number 0702–0109.

Needs and Uses: Army radiation permits are required for use, storage, or possession of radiation sources by non-Army agencies (including their civilian contractors) on an Army installation.

The non-Army applicant will apply by letter, email or facsimile with supporting documentation to the garrison commander through the appropriate tenant commander or garrison director.

The Army radiation permit application will specify the effective date and duration for the Army radiation permit and describe the purposes for which the Army radiation permit is being sought. The application will include identification of the trained operating personnel who will be responsible for implementation of the activities authorized by the permit and a summary of their professional qualifications; the point-of-contact name and phone number for the application; the applicant's radiation safety Standing Operating Procedures (SOPs); storage provisions when the radiation source is not in use; and procedures for notifying the installation of reportable incidents/accidents.

Affected Public: Business or other for-profit entities; not-for-profit institutions; State, local or Tribal governments.

Annual Burden Hours: 470 hours.

Number of Respondents: 235.

Responses per Respondent: 1.

Average Burden per Response: 2 hours.

Frequency: On occasion.

Dated: November 15, 2013.

Aaron Siegel,

Alternate OSD Federal Register, Liaison Officer, Department of Defense.

[FR Doc. 2013–27877 Filed 11–20–13; 8:45 am]

BILLING CODE 5001–06–P

DEPARTMENT OF EDUCATION

Applications for New Awards; National Institute on Disability and Rehabilitation Research—Disability and Rehabilitation Research Projects and Centers Program—Minority-Serving Institution Field-Initiated Projects Program

Correction

In notice document 2013–27559 appearing on pages 69398–69402 in the issue of November 19, 2013, make the following correction:

On page 69398, in the first column, in the 21st line from the bottom, ''February 18, 2014'' should read ''January 21, 2014''.

[FR Doc. C1–2013–27559 Filed 11–20–13; 8:45 am]

BILLING CODE 1505–01–D

DEPARTMENT OF ENERGY

DOE/NSF High Energy Physics Advisory Panel

AGENCY: Department of Energy, Office of Science.

ACTION: Notice of Open Meeting.

SUMMARY: This notice announces a meeting of the DOE/NSF High Energy Physics Advisory Panel (HEPAP). The Federal Advisory Committee Act (Pub. L. 92–463, 86 Stat. 770) requires that public notice of these meetings be announced in the **Federal Register**.

DATES: Friday, December 6, 2013; 9:00 a.m.–6:00 p.m. Saturday, December 7, 2013; 9:00 a.m.–4:00 p.m.

ADDRESSES: Gaithersburg Marriott, 9751 Washingtonian Boulevard, Gaithersburg, Maryland 20878.

FOR FURTHER INFORMATION CONTACT: John Kogut, Executive Secretary; High Energy Physics Advisory Panel; U.S. Department of Energy; SC–25/Germantown Building, 1000 Independence Avenue SW., Washington, DC 20585–1290; Telephone: (301) 903–1298.

SUPPLEMENTARY INFORMATION:

Purpose of Meeting: To provide advice and guidance on a continuing basis to the Department of Energy and the National Science Foundation on scientific priorities within the field of high energy physics research.

Tentative Agenda: Agenda will include discussions of the following:

December 6–7, 2013

- Discussion of Department of Energy High Energy Physics Program
- Discussion of National Science Foundation Elementary Particle Physics Program
- Reports on and Discussions of Topics of General Interest in High Energy Physics
- Public Comment (10-minute rule)

Public Participation: The meeting is open to the public. A webcast of this meeting will be available. Please check the Web site below for updates and information on how to view the meeting. If you would like to file a written statement with the Committee, you may do so either before or after the meeting. If you would like to make oral statements regarding any of these items on the agenda, you should contact John Kogut, (301) 903–1298 or *John.Kogut@science.doe.gov.* You must make your request for an oral statement at least five business days before the meeting. Reasonable provision will be made to include the scheduled oral statements on the agenda. The Chairperson of the Panel will conduct the meeting to facilitate the orderly conduct of business. Public comment will follow the 10-minute rule.

Minutes: The minutes of the meeting will be available on the U.S. Department of Energy's Office of High Energy Physics Advisory Panel Web site: *http://science.energy.gov/hep/hepap/meetings/*.

Issued at Washington, DC, on November 15, 2013.

LaTanya R. Butler,

Deputy Committee Management Officer.

[FR Doc. 2013–27939 Filed 11–20–13; 8:45 am]

BILLING CODE 6450–01–P

DEPARTMENT OF ENERGY

Building Technologies Office Prioritization Tool

AGENCY: Office of Energy Efficiency and Renewable Energy, Department of Energy.

ACTION: Request for information (RFI).

SUMMARY: The U.S. Department of Energy's (DOE) Building Technologies Office (BTO) developed the Prioritization Tool to improve its programmatic decision-making. The tool provides an objective framework for most energy-saving measures and scenarios, as well as methodology, comparing long-term benefits and end-user costs applied to various markets, end-uses, and lifetimes. Currently, BTO seeks comments and information related to the Prioritization Tool that improves the tool's accuracy and applicability for technology planning within BTO. Specifically, this notice solicits comments and information on data, assumptions and outputs of various energy efficiency technologies and

activities analyzed by the Prioritization Tool.

DATES: Responses to this RFI must be submitted electronically to *BTO_P_Tool_RFI@go.doe.gov* no later than 5:00 p.m. (EST) on December 24, 2013.

FOR FURTHER INFORMATION CONTACT: Mr. Patrick Phelan, U.S. Department of Energy, Office of Energy Efficiency and Renewable Energy, Building Technologies Office, EE 2J, 1000 Independence Avenue SW., Washington, DC 20585–0121. Telephone: (202) 287–1906. Email: *patrick.phelan@ee.doe.gov*.

SUPPLEMENTARY INFORMATION:

Table of Contents

I. Background
A. Program Overview
B. Prioritization Tool Description
C. Methodology
D. Inputs and Outputs
II. Purpose
III. Disclaimer and Important Notes
IV. Proprietary Information
V. Evaluation and Administration by Federal and Non-Federal Personnel
VI. Request for Information Categories and Questions
A. Category 1
B. Category 2
C. Category 3
D. Category 4
E. Category 5
F. Category 6

I. Background

A. Program Overview

The U.S. Department of Energy (DOE) Building Technologies Office (BTO) focuses on three key areas in order to develop innovative and cost-effective energy saving solutions:

- Supporting research and development of high impact building technologies
- Accelerating market penetration of technologies that will save the country energy by assisting to overcome key market barriers
- Organizing and facilitating enforcement of minimum efficiency standards and building codes to ensure energy savings within buildings.

BTO has developed a new technology prioritization framework to provide analytical support for its programmatic decision-making in order to further accelerate the transformation of the U.S. building energy efficiency sector.

B. Prioritization Tool Description

The tool was designed to inform programmatic decision-making and facilitate the setting of programmatic goals. It also allows the evaluation of ''what if'' scenarios when pursuing potential competing energy efficiency measures, and it ultimately helps the BTO to create Funding Opportunity Announcements (FOAs) objectives. Currently, the tool contains data on over 500 energy efficiency measures along with their markets. It has the capability to perform extensive analyses using established methodology for calculating energy savings potential and the costs of conserved energy associated with each measure.

The Prioritization Tool enables open and objective comparison of hundreds of technology and market-based investment opportunities available to BTO. The energy efficiency measures identified in the tool cover a spectrum of market opportunities, including residential and commercial buildings, new and existing buildings, as well as industrial and outdoor applications. Most of the measures considered fall within one of BTO's main focus areas in building energy end-use sectors:

- Heating, ventilation and air-conditioning (HVAC)
- Water heating
- Appliances
- Lighting
- Windows
- Envelope: insulation and roofing
- Sensors and controls
- Miscellaneous electric loads

The tool strives to be comprehensive by including most known energy efficiency measures proven to save energy; laboratory-demonstrated, field-tested, analytically derived (with peer review) savings, and inclusive by integrating inputs from hundreds of sources and expert reviews.

While BTO has identified over five hundred energy efficiency measures, it chose to narrow the scope of analysis to focus on the most promising measures that have the greatest potential for energy savings across the United States. By excluding measures based on the following predefined criteria, BTO has created a portfolio consisting of 261 measures which, by using the Prioritization Tool, were subsequently subjected to a more extensive quantitative analysis to assure only the highest impact measures are the focus of further effort. The approach was first for BTO to focus on technologies which had the highest data quality (i.e., where peer-reviewed energy efficiency and cost data are available in published reports or from technology experts).

Then, measures were excluded from further analysis if they:

- Offered low energy savings potential (less than 100 TBtu in the year 2030);
- Involved fuel switching (unless the analysis team deemed a technology as important to assess);
- Had one or more significant market barriers;
- Were deemed impractical by the analysis team;
- Were already included in the Annual Energy Outlook (AEO) 2010 baseline, which takes into account known technologies, technological and demographic trends, and current laws and regulations.

These criteria were considered as general guidelines; exceptions for certain promising or cost effective measures were made on a case-by-case basis based on expert analysis. Finally, BTO analyzed and prioritized, both individually and in the context of the full portfolio of measures, all 261 measures having relatively high energy savings potential and significant ability to compete in the market place.

C. Methodology

The BTO Prioritization Tool uses established methodologies to evaluate under a variety of scenarios the incremental lifetime costs of a measure's energy savings potential. The tool calculates potential savings at the national or regional level and compares the results to a business-as-usual baseline defined in the U.S. Energy Information Administration's (EIA) Annual Energy Outlook 2010 (AEO).[1] The following scenarios are used for the prioritization analysis and represent potential annual energy savings associated for each measure:

- *Technical Potential* is the annual energy savings achieved by instant replacement of all technically suitable existing stock in 2010 and beyond with the proposed measure, regardless of cost. Although the technical potential cannot be realized, it provides an upper bound to the maximum energy savings that can be achieved by the proposed measure assuming instant and complete market adoption of the technology.
- *Maximum Adoption Potential* is the total annual savings based on deployment of the evaluated measure given 100% market penetration for all end-of-life or accelerated replacements and new purchases or new construction installations. The entire existing stock is replaced at an accelerated schedule for cases when a retrofit opportunity is cost effective, which means the present value of the energy savings of other efficiency measures exceeds the full, installed cost of the evaluated efficiency measure. Therefore, it becomes

[1] *http://www.eia.gov/oiaf/aeo/pdf/0383(2010).pdf.* The AEO provides annual projections through the year 2035 of national equipment stock and energy consumption based on end-use, type of fuel, geographic region, and type of building or home.

economically rational to replace all of the currently deployed stock immediately with the efficiency measure. This scenario corresponds to the least expensive means to deploy a given efficiency measure into the marketplace. This potential is also referred to as Unstaged Maximum Adoption Potential.

• *Staged Maximum Adoption Potential* adjusts the savings of the Maximum Adoption Potential to avoid double-counting energy savings for measures with overlapping markets within a given portfolio. For example, the installation of compact fluorescent light bulbs would reduce the potential energy savings from light-emitting diodes (LEDs). The savings of the lowest-cost measures are accounted for first.

• *Adoption-Based Potential* uses the Bass diffusion model2 [2] to represent a more realistic potential impact on energy savings in the marketplace. This scenario allows simulation of the DOE programs' impact on measure diffusion and assumes that research and development and deployment activities would accelerate market introduction. It also allows for evaluation of standards by replacing all purchased stock with the technology being evaluated once a standard is set in place. For this RFI, outputs from this scenario are not available but will be addressed in future publications.

For the unstaged and staged *Maximum Adoption Potential* scenarios, the tool also calculates the levelized cost of conserved energy (CCE), which is an annualized value of discounted costs and benefits of each measure. More specifically, the CCE allows comparison of end-user costs per unit of conserved energy for each measure. The end-user cost refers to the difference in capital, operations, and maintenance costs between the measure being analyzed and a typical baseline, adjusted for potential cost differences resulting from the variation in lifetimes between the proposed measure and the baseline. CCE is used during staging analysis, which involves adjusting the energy savings of each measure by taking into account competition for savings within the same or overlapping markets, and allocating savings within specific markets to measures with the lowest unstaged CCE first. Consequently, the staged CCE is calculated based on adjusted staged savings. Hence the staged CCE is defined as the annualized value of discounted cost per unit of conserved energy after staging of energy savings for each measure. Results are presented for both unstaged and staged scenarios by graphing unstaged or staged CCE versus unstaged or staged *Maximum Adoption Potential* savings, respectively.

For further overview, discussion and examples of how the Prioritization Tool analyses are conducted, please view the video presentation at *http://media.navigant.com/videotest/EN_DOEWebex_VID_0913.html.* For more detailed description and discussion of the methodologies underlying the BTO Prioritization Tool's analytical capabilities, as well as its outputs, caveats, and functions, refer to the National Renewable Energy Laboratory (NREL) Technical Report: NREL/TP–6A20–54799, available at *http://www.nrel.gov/docs/fy12osti/54799.pdf.*

D. Inputs and Outputs

DOE seeks comments and information on measure inputs and assumptions used by the BTO Prioritization Tool as well as the outputs generated by the tool. The details of the inputs and outputs for the defined portfolio of 261 measures are provided in the spreadsheet, available at *https://eere-exchange.energy.gov/Default.aspx?Search=prioritization%20tool&SearchType=#FoaIdc83baeea-4a16-48fa-a123-7c03796b503b* and titled: RFI attachments_v11. The spreadsheet is divided into eight energy end-uses: Heating, ventilation and air-conditioning (HVAC), water heating, envelope, windows, appliances, sensors and controls, lighting, and miscellaneous electric loads (MELs). Information on each end-use is presented in two tabs: An input tab that contains relevant input information on each measure and an output tab that contains the analytical results for the year 2030. The inputs include data, calculations and assumptions based on the sources listed for each energy efficiency measure. More specifically, the inputs include a description of each measure, targeted market sector, typical technology life expectancy, energy consumption, and installed costs for both the baseline and high-efficiency measures. It also includes the percentage energy savings and cost premium of an efficient measure compared to the baseline measure. DOE also seeks comments and information with regard to the tool's outputs, which include estimated *Technical Potential* energy savings, *Unstaged Maximum Adoption Potential* savings, unstaged cost of conserved energy (CCE), *Staged Maximum Adoption Potential* savings, and staged CCE for each measure in the year 2030. Each column of the spreadsheet referenced above contains specific input or output data, and is annotated with a comment box that further explains the data in that column. For further information on the Prioritization Tool's individual measure inputs, refer to its notes and references columns. For further information on the tool's outputs, refer to NREL TP 6A20–54799 and the BTO video presentation, which can be found at links referenced above.

II. Purpose

The purpose of this RFI is to solicit comments and information from industry, academia, research laboratories, government agencies, and other stakeholders on input and output data for all measures evaluated in the tool. DOE seeks data on new measures that may be missing from the tool or measures that have not been evaluated but have potential for significant national energy savings. This is solely a request for information and not a Funding Opportunity Announcement (FOA). EERE is not accepting applications for funding related to this RFI at this time.

III. Disclaimer and Important Notes

This RFI is not a Funding Opportunity Announcement (FOA); therefore, EERE is not accepting applications at this time. EERE may issue a FOA in the future based on or related to the content and responses to this RFI; however, EERE may also elect not to issue a FOA. There is no guarantee that a FOA will be issued as a result of this RFI. Responding to this RFI does not provide any advantage or disadvantage to potential applicants if EERE chooses to issue a FOA regarding the subject matter. Final details, including the anticipated award size, quantity, and timing of EERE funded awards, will be subject to Congressional appropriations and direction.

Any information obtained as a result of this RFI is intended to be used by the Government on a non-attribution basis for planning and strategy development; this RFI does not constitute a formal solicitation for proposals or abstracts. Your response to this notice will be treated as information only. EERE will review and consider all responses in its formulation of program strategies for the identified materials of interest that are the subject of this request. In accordance with the Federal Acquisition Regulations, 48 CFR 15.201(e), responses to this notice are not offers and cannot be accepted by the Government to form a binding contract. EERE will not provide reimbursement

[2] Bass, F.M., 1969, ''A New Product Growth Model for Consumer Durables,'' Management Science, Vol. 15, pp. 215–227.

for costs incurred in responding to this RFI. Respondents are advised that DOE is under no obligation to acknowledge receipt of the information received or provide feedback to respondents with respect to any information submitted under this RFI. Responses to this RFI do not bind EERE to any further actions related to this topic.

IV. Proprietary Information

Because information received in response to this RFI may be used to structure future programs and FOAs and/or otherwise be made available to the public, respondents are strongly advised to NOT include any information in their responses that might be considered business sensitive, proprietary, or otherwise confidential. If, however, a respondent chooses to submit business sensitive, proprietary, or otherwise confidential information, it must be clearly and conspicuously marked as such in the response.

Responses containing confidential, proprietary, or privileged information must be conspicuously marked as described below. Failure to comply with these marking requirements may result in the disclosure of the unmarked information under the Freedom of Information Act or otherwise. The U.S. Federal Government is not liable for the disclosure or use of unmarked information, and may use or disclose such information for any purpose.

If your response contains confidential, proprietary, or privileged information, you must include a cover sheet marked as follows identifying the specific pages containing confidential, proprietary, or privileged information:

Notice of Restriction on Disclosure and Use of Data: Pages [list applicable pages] of this response may contain confidential, proprietary, or privileged information that is exempt from public disclosure. Such information shall be used or disclosed only for the purposes described in this RFI: DE–FOA–0001024. The Government may use or disclose any information that is not appropriately marked or otherwise restricted, regardless of source.

In addition, (1) the header and footer of every page that contains confidential, proprietary, or privileged information must be marked as follows: ''Contains Confidential, Proprietary, or Privileged Information Exempt from Public Disclosure'' and (2) every line and paragraph containing proprietary, privileged, or trade secret information must be clearly marked with double brackets or highlighting.

V. Evaluation and Administration by Federal and Non-Federal Personnel

Federal employees are subject to the non-disclosure requirements of a criminal statute, the Trade Secrets Act, 18 U.S.C. 1905. The Government may seek the advice of qualified non-Federal personnel. The Government may also use non-Federal personnel to conduct routine, nondiscretionary administrative activities. The respondents, by submitting their response, consent to DOE providing their response to non-Federal parties. Non-Federal parties given access to responses must be subject to an appropriate obligation of confidentiality prior to being given the access. Submissions may be reviewed by support contractors and private consultants.

VI. Request for Information Categories and Questions

DOE requests that manufacturers, utilities, research organizations, state and municipal energy programs, and other stakeholders submit their comments and additional information on the Prioritization Tool's inputs and outputs for measures as attachments to an email. It is recommended that attachments with file sizes exceeding 25MB be compressed (i.e., zipped) to ensure message delivery. Only electronic responses will be accepted. Respondents may answer as many or as few questions as they wish. EERE will not respond to individual submissions or publish publicly a compendium of responses. A response to this RFI will not be viewed as a binding commitment to develop or pursue the project or ideas discussed, nor does it provide an advantage to future Funding Opportunity Announcements. Respondents are requested to provide the following information in their response to this RFI:

- Company/institution name;
- Company/institution contact;
- Contact's address, phone number, and email address.

DOE invites comments and information from respondents on all of the input and output data that are provided in the spreadsheet (*https://eere-exchange.energy.gov/Default.aspx?Search=prioritization%20tool&SearchType=#FoaIdc83baeea-4a16-48fa-a123-7c03796b503b),* as well as any of the elements previously discussed or additional issues the respondent deems important. Use the following email address: *BTO_P_Tool_RFI@go.doe.gov.* Additional high-quality data sources and references are needed to evaluate any other possible initiatives to expand the portfolio and help identify the most promising cost-effective energy reduction measures for buildings. Specifically, DOE is requesting comment and information on the following topics:

A. Category 1: Information on BTO Prioritization Tool's Inputs

Please provide your comments on the accuracy of the inputs of the Prioritization Tool, listed in the input tab for each energy end-use field in the spreadsheet (*https://eere-exchange.energy.gov/Default.aspx?Search=prioritization%20tool&SearchType=#FoaIdc83baeea-4a16-48fa-a123-7c03796b503b).* These inputs include the measure's description, targeted market sector, technology typical life expectancy, energy consumption and installed cost for both baseline and efficient measures, and/or percentage energy savings and cost premium of an efficient measure compared to the baseline measure.

B. Category 2: Additional Information on BTO Prioritization Tool's Inputs

Please provide additional up-to-date, peer-reviewed and published information, studies, and reports on any of the inputs of the evaluated energy efficiency measures.

C. Category 3: BTO Prioritization Tool's Generated Outputs

Please provide your comments on the perceived accuracy of the tool's generated outputs listed in the spreadsheet, whether as a whole for the entire portfolio of measures or in part for each measure. Specifically, these outputs include: *Technical Potential; Unstaged Maximum Adoption Potential,* unstaged CCE; *Staged Maximum Adoption Potential,* and staged CCE.

D. Category 4: Information on Absent Buildings-Related Energy Efficiency Measures That May Enhance the Tool or Measures That Are Listed But Were Excluded From Analysis

Please provide any up-to-date, peer-reviewed and published information, studies and reports on buildings-related energy efficiency measures missing from the tool or measures that are listed but were excluded from analysis due to a lack of reliable peer-reviewed, published data. While only a couple hundred measures are included in the final analysis, hundreds of others are available for analysis and can be viewed in the tab called ''Excluded Measures'' in the spreadsheet referenced above. For each measure, DOE is specifically interested in information on measure description, its incremental cost and

energy savings over its baseline technology, life expectancy, and a description of the market to which the measure can be applied.

E. Category 5: Benefits or Risks of Using the BTO Prioritization Tool

What are potential or perceived benefits or risks of using the BTO Prioritization Tool to inform decision-making within BTO?

F. Category 6: Public Access to the BTO Prioritization Tool

What is the perceived value in the BTO Prioritization Tool models and analysis, and interest in having public access to the BTO Prioritization Tool? If the BTO Prioritization Tool is to be made publically available, what format is preferred (e.g., real-time online execution, downloadable Excel file, downloadable non-Excel file, etc.)? An example of a similar publically available software tool is the *System Advisor Model* for renewable energy systems (*https://sam.nrel.gov/*).

Issued in Washington, DC, on November 13, 2013.

Roland J. Risser,

Director, Building Technologies Office, Energy Efficiency and Renewable Energy.

[FR Doc. 2013–27941 Filed 11–20–13; 8:45 am]

BILLING CODE 6450–01–P

DEPARTMENT OF ENERGY

Federal Energy Regulatory Commission

[Docket No. IC14–3–000]

Commission Information Collection Activities (Ferc–Ferc–549d); Comment Request; Extension

AGENCY: Federal Energy Regulatory Commission, DOE.

ACTION: Notice of information collection and request for comments.

SUMMARY: In compliance with the requirements of the Paperwork Reduction Act of 1995, 44 U.S.C. 3506(c)(2)(A), the Federal Energy Regulatory Commission (Commission or FERC) is soliciting public comment on the currently approved information collection, FERC–549D (Quarterly Transportation and Storage Report for Intrastate Natural Gas and Hinshaw Pipelines).

DATES: Comments on the collection of information are due January 21, 2014.

ADDRESSES: You may submit comments (identified by Docket No. IC14–3–000) by either of the following methods:

- eFiling at Commission's Web site: *http://www.ferc.gov/docs-filing/efiling.asp.*
- Mail/Hand Delivery/Courier: Federal Energy Regulatory Commission, Secretary of the Commission, 888 First Street NE., Washington, DC 20426.

Instructions: All submissions must be formatted and filed in accordance with submission guidelines at: *http://www.ferc.gov/help/submission-guide.asp.* For user assistance contact FERC Online Support by email at *ferconlinesupport@ferc.gov,* or by phone at: (866) 208–3676 (toll-free), or (202) 502–8659 for TTY.

Docket: Users interested in receiving automatic notification of activity in this docket or in viewing/downloading comments and issuances in this docket may do so at *http://www.ferc.gov/docs-filing/docs-filing.asp.*

FOR FURTHER INFORMATION CONTACT: Ellen Brown may be reached by email at *DataClearance@FERC.gov,* telephone at (202) 502–8663, and fax at (202) 273–0873.

SUPPLEMENTARY INFORMATION:

Title: Quarterly Transportation and Storage Report for Intrastate Natural Gas and Hinshaw Pipelines.

OMB Control No.: 1902–0253

Type of Request: Three-year extension of the FERC–549D information collection requirements with no changes to the current reporting requirements.

Abstract: The reporting requirements under FERC–549D are required to carry out the Commission's policies in accordance with the general authority in Sections 1(c) of the Natural Gas Act (NGA) [1] and Sections 311 of the Natural Gas Policy Act of 1978 (NGPA).[2] This collection promotes transparency by collecting and making available intrastate and Hinshaw pipeline transactional information. The Commission collects the data upon a standardized form with all requirements outlined in 18 CFR 284.126.

The FERC Form 549D collects the following information:

- Full legal name and identification number of the shipper receiving service;
- Type of service performed for each transaction;
- The rate charged under each transaction;
- The primary receipt and delivery points for the transaction, specifying the rate schedule/name of service and docket were approved;
- The quantity of natural gas the shipper is entitled to transport, store, and deliver for each transaction;
- The term of the transaction, specifying the beginning and ending month and year of current agreement;
- Total volumes transported, stored, injected or withdrawn for the shipper; and
- Annual revenues received for each shipper, excluding revenues from storage services.

Filers submit the Form-549D on a quarterly basis.

Access to the FERC–549D Information Collection Materials: A copy of the current form and related materials can be found at *http://www.ferc.gov/docs-filing/forms.asp#549d,* but will not be included in the **Federal Register**. The Commission will not publish these materials in the **Federal Register**.

Type of Respondents: Intrastate natural gas and Hinshaw pipelines.

Estimate of Annual Burden: [3] The Commission estimates the total Public Reporting Burden for this information collection as:

[1] 15 U.S.C. 717–817–w.

[2] 15 U.S.C. 3301–3432.

[3] The Commission defines burden as the total time, effort, or financial resources expended by persons to generate, maintain, retain, or disclose or provide information to or for a Federal agency. For further explanation of what is included in the information collection burden, reference 5 Code of Federal Regulations 1320.3.

FERC–549D—QUARTERLY TRANSPORTATION AND STORAGE REPORT FOR INTRASTATE NATURAL GAS AND HINSHAW PIPELINES

Format of pipelines' filing	Number of respondents (A)	Number of responses per respondent (B)	Total number of responses (A) × (B) = (C)	Average burden hours per response (D)	Estimated total annual burden (C) × (D)
Implementation Burden					
PDF filings	3	1	3	68	204
XML filings	2	1	2	104	208
Ongoing Burden					
PDF filings	76	4	304	12.5	3,800
XML filings	33	4	132	10	1,320
TOTAL	[4] 109		109		5,532

The total estimated annual cost burden to respondents is $436,254 [5,532 hours $78.86/hour [5] = $436,254].

Comments: Comments are invited on: (1) Whether the collection of information is necessary for the proper performance of the functions of the Commission, including whether the information will have practical utility; (2) the accuracy of the agency's estimate of the burden and cost of the collection of information, including the validity of the methodology and assumptions used; (3) ways to enhance the quality, utility and clarity of the information collection; and (4) ways to minimize the burden of the collection of information on those who are to respond, including the use of automated collection techniques or other forms of information technology.

Dated: November 15, 2013.

Kimberly D. Bose,

Secretary.

[FR Doc. 2013–27956 Filed 11–20–13; 8:45 am]

BILLING CODE 6717–01–P

[4] This figure does not include the five respondents for the ''Implementation Burden''.

[5] This cost represents the average cost of four career fields: Legal ($128.02/hour), Accountants ($48.58/hour), Management Analyst ($56.27/hour), and Computer and Information ($82.67/hour); this cost also includes benefit costs within the hourly estimates.

DEPARTMENT OF ENERGY

Federal Energy Regulatory Commission

[Project No. 13272–003]

Alaska Village Electric Cooperative, Inc.; Notice of Application Tendered for Filing With the Commission and Establishing Procedural Schedule for Licensing and Deadline for Submission of Final Amendments

Take notice that the following hydroelectric application has been filed with the Commission and is available for public inspection.

a. *Type of Application:* Minor Original License.

b. *Project No.:* 13272–003.

c. *Date Filed:* November 1, 2013.

d. *Applicant:* Alaska Village Electric Cooperation, Inc. (AVEC).

e. *Name of Project:* Old Harbor Hydroelectric Project.

f. *Location:* The project would be constructed on the East Fork of Mountain Creek, near the town of Old Harbor, Kodiak Island Borough, Alaska. Some project facilities would be located on approximately 1.85 acres of federal lands of the Kodiak National Wildlife Refuge.

g. *Filed Pursuant to:* Federal Power Act, 16 U.S.C. 791(a)–825(r).

h. *Applicant Contact:* Meera Kohler, President and CEO, AVEC, 4831 Eagle Street, Anchorage, AK 99503; Telephone (907) 561–1818.

i. *FERC Contact:* Mary Greene, (202) 502–8675 or *mary.greene@ferc.gov*.

j. This application is not ready for environmental analysis at this time.

k. *The Project Description:* The proposed run-of-river project will consist of an intake, penstock, powerhouse, tailrace and constructed channel, access road and trail, and transmission line. Power from this project will be used by the residents of the city of Old Harbor.

Intake

The intake will consist of a diversion/cut off weir with a height of approximately 3–8 feet and a length of approximately 100 feet. A below grade transition with an above-ground air relief inlet pipe will convey water to a buried high-density polyethylene pipe and steel pipe penstock.

Penstock

A 10,100-foot-long penstock consisting of an 18-inch-diameter polyethylene pipe, a 20-inch-diameter polyethylene pipe, and a 16-inch-diameter steel pipe will be installed. A total of 7,400 feet of polyethylene will be installed from the intake and 2,750 feet of steel pipe will be installed near the powerhouse.

Powerhouse

The powerhouse will consist of an approximately 30-foot by 35-foot by 16-foot high metal building or similar structure. The building will house two 262-kW Pelton turbines, a 480 volt, 3 phase synchronous generator, and switchgear for each turbine.

Tailrace

A tailrace structure and culvert or constructed stream bed will convey the project flows from the powerhouse to the nearby pond, known in Old Harbor as Swimming Pond. The tailrace will continue on from Swimming Pond, conveying project flows for a total of approximately 2,300 feet.

Access Road and Trail

An approximately 11,500-foot-long by 10-foot-wide intake access trail will be constructed between the intake and the powerhouse and an approximately 5,720-foot-long by 24-foot-wide access

road will extend from powerhouse to the existing community drinking water tank access road. As requested by the U.S. Fish and Wildlife Service, to prevent traffic in the Kodiak National Wildlife Refuge, the intake access trail will be closed to non-project traffic. The powerhouse access road will be open to public vehicles. An approximately 6,550-foot-long, 12.47kV three-phase overhead power line will extend from the powerhouse to the existing power distribution system in Old Harbor.

Transmission Line

A 6,500-foot-long, 12.47-kV, 3-phase overhead power line will be installed from the powerhouse to the existing power distribution system in Old Harbor.

l. *Locations of the Application:* A copy of the application is available for review at the Commission in the Public Reference Room or may be viewed on the Commission's Web site at *http://www.ferc.gov* using the ''eLibrary'' link. Enter the docket number excluding the last three digits in the docket number field to access the document. For assistance, contact FERC Online Support at *FERCOnlineSupport@ferc.gov* or toll-free at 1–866–208–3676, or for TTY, (202) 502–8659. A copy is also available for inspection and reproduction at the address in item (h) above.

m. You may also register online at *http://www.ferc.gov/docs-filing/esubscription.asp* to be notified via email of new filings and issuances related to this or other pending projects. For assistance, contact FERC Online Support.

n. *Procedural Schedule:*

The application will be processed according to the following preliminary Hydro Licensing Schedule. Revisions to the schedule may be made as appropriate.

Milestone	Target date
Notice of Acceptance/Notice of Ready for Environmental Analysis	January 2014.
Filing of recommendations, preliminary terms and conditions, and fishway prescriptions	March 2014.
Commission issues Environmental Assessment (EA)	July 2014.
Comments on EA	August 2014.
Modified terms and conditions	October 2014.

o. Final amendments to the application must be filed with the Commission no later than 30 days from the issuance date of the notice of ready for environmental analysis.

Dated: November 14, 2013.

Kimberly D. Bose,

Secretary.

[FR Doc. 2013–27959 Filed 11–20–13; 8:45 am]

BILLING CODE 6717–01–P

DEPARTMENT OF ENERGY

Federal Energy Regulatory Commission

[Docket Nos. CP14–17–000; PF13–7–000]

Columbia Gas Transmission, LLC; Notice of Application

Take notice that on November 1, 2013, Columbia Gas Transmission, LLC (Columbia), 1700 MacCorkle Avenue SE., Charleston, West Virginia 25314, filed an application under sections 7(b) and 7(c) of the Natural Gas Act for the East Side Expansion Project (Project) in Pennsylvania, New Jersey, New York, and Maryland. Columbia proposes to (i) replace existing compressors with new compressors at Milford and Easton Compressor Stations (CS), located in Pennsylvania, (ii) install approximately 9.5 miles of new 26-inch pipeline loop at the existing Line 1278 between Eagle CS and Downingtown CS in Chester County, Pennsylvania, (iii) install approximately 9.5 miles of 20-inch pipeline loop at the existing Line 10345 in Gloucester County, New Jersey, and (iv) install various measurement, station piping, and appurtenant facilities at existing sites located in Orange County, New York, Bucks and Montgomery Counties, Pennsylvania, and Harford County, Maryland, all as more fully set forth in the application. This filing is available for review at the Commission in the Public Reference Room or may be viewed on the Commission's Web site at *http://www.ferc.gov* using the ''eLibrary'' link. Enter the docket number excluding the last three digits in the docket number field to access the document. For assistance, please contact FERC Online Support at *FERCOnlineSupport@ferc.gov* or toll free at (866) 208–3676, or for TTY, contact (202) 502–8659.

Any questions regarding the East Side Expansion Project should be directed to Fredric J. George, Lead Counsel, Columbia Gas Transmission, LLC, P.O. Box 1273, Charleston, West Virginia 25325–1273 or at (304) 357–2359 (phone), or (304) 357–3206 (fax), or *fgeorge@nisource.com* (email).

On March 8, 2013, the Commission staff granted Columbia's request to utilize the National Environmental Policy Act (NEPA) Pre-Filing Process and assigned Docket No. PF13–7–000 to staff activities involving the project. Now, as of the filing of this application on November 1, 2013 (CP14–17–000), the NEPA Pre-Filing Process for this project has ended. From this time forward, this proceeding will be conducted in Docket No. CP14–17–000, as noted in the caption of this Notice.

Pursuant to section 157.9 of the Commission's rules, 18 CFR 157.9, within 90 days of this Notice, the Commission staff will either: Complete its environmental assessment (EA) and place it into the Commission's public record (eLibrary) for this proceeding; or issue a Notice of Schedule for Environmental Review. If a Notice of Schedule for Environmental Review is issued, it will indicate, among other milestones, the anticipated date for the Commission staff's issuance of the final environmental impact statement (FEIS) or EA for this proposal. The filing of the EA in the Commission's public record for this proceeding or the issuance of a Notice of Schedule for Environmental Review will serve to notify federal and state agencies of the timing for the completion of all necessary reviews, and the subsequent need to complete all federal authorizations within 90 days of the date of issuance of the Commission staff's FEIS or EA.

There are two ways to become involved in the Commission's review of this project. First, any person wishing to obtain legal status by becoming a party to the proceedings for this project should, on or before the comment date stated below, file with the Federal Energy Regulatory Commission, 888 First Street NE., Washington, DC 20426, a motion to intervene in accordance with the requirements of the Commission's Rules of Practice and Procedure (18 CFR 385.214 or 385.211) and the Regulations under the NGA (18 CFR 157.10). A person obtaining party status will be placed on the service list maintained by the Secretary of the Commission and will receive copies of all documents filed by the applicant and by all other parties. A party must submit

7 copies of filings made with the Commission and must mail a copy to the applicant and to every other party in the proceeding. Only parties to the proceeding can ask for court review of Commission orders in the proceeding.

However, a person does not have to intervene in order to have comments considered. The second way to participate is by filing with the Secretary of the Commission, as soon as possible, an original and two copies of comments in support of or in opposition to this project. The Commission will consider these comments in determining the appropriate action to be taken, but the filing of a comment alone will not serve to make the filer a party to the proceeding. The Commission's rules require that persons filing comments in opposition to the project provide copies of their protests only to the party or parties directly involved in the protest.

Persons who wish to comment only on the environmental review of this project should submit an original and two copies of their comments to the Secretary of the Commission. Environmental commentors will be placed on the Commission's environmental mailing list, will receive copies of the environmental documents, and will be notified of meetings associated with the Commission's environmental review process. Environmental commentors will not be required to serve copies of filed documents on all other parties. However, the non-party commentors will not receive copies of all documents filed by other parties or issued by the Commission (except for the mailing of environmental documents issued by the Commission) and will not have the right to seek court review of the Commission's final order.

The Commission strongly encourages electronic filings of comments, protests and interventions in lieu of paper using the ''eFiling'' link at *http://www.ferc.gov.* Persons unable to file electronically should submit an original and 7 copies of the protest or intervention to the Federal Energy regulatory Commission, 888 First Street NE., Washington, DC 20426.

This filing is accessible on-line at *http://www.ferc.gov,* using the ''eLibrary'' link and is available for review in the Commission's Public Reference Room in Washington, DC. There is an ''eSubscription'' link on the Web site that enables subscribers to receive email notification when a document is added to a subscribed docket(s). For assistance with any FERC Online service, please email *FERCOnlineSupport@ferc.gov,* or call (866) 208–3676 (toll free). For TTY, call (202) 502–8659.

Comment Date: December 6, 2013.

Dated: November 15, 2013.

Kimberly D. Bose,

Secretary.

[FR Doc. 2013–27952 Filed 11–20–13; 8:45 am]

BILLING CODE 6717–01–P

DEPARTMENT OF ENERGY

Federal Energy Regulatory Commission

[Docket No. CP14–18–000]

Transcontinental Gas Pipe Line Company, LLC; Notice of Application

On November 7, 2013, Transcontinental Gas Pipe Line Company, LLC (Transco) filed with the Federal Energy Regulatory Commission (Commission) an application under section 7 of the Natural Gas Act to construct and operate its Woodbridge Delivery Lateral Project (Project), a new delivery lateral extending 2.4 miles from an interconnection with Transco's mainline to the CPV Shore, LLC's Woodbridge Energy Center electric generating station. The delivery lateral and generating station are in Middlesex County, New Jersey. The Project will enable Transco to provide 264,000 dekatherms per day of incremental firm natural gas transportation service to CPV Shore, LLC under Transco's Rate Schedule FDLS, all as more fully set forth in the application which is on file with the Commission and open to public inspection. The filing may also be viewed on the web at *http://www.ferc.gov* using the ''eLibrary'' link. Enter the docket number excluding the last three digits in the docket number field to access the document. For assistance, please contact FERC Online Support at *FERCOnlineSupport@ferc.gov* or toll free at (866) 208–3676, or TTY, contact (202) 502–8659.

Questions regarding this application may be directed to Marg Camardello, Team Leader, Rates & Regulatory at Transcontinental Gas Pipe Line Company, LLC, P.O. Box 1396, Houston, Texas 77251 or by calling 713–215–3380. In addition, 866–455–9103 may be called toll-free or email-mail addressed to *PipelineExpansion@williams.com.*

Pursuant to section 157.9 of the Commission's rules, 18 CFR 157.9, within 90 days of this Notice the Commission staff will either: Complete its environmental assessment (EA) and place it into the Commission's public record (eLibrary) for this proceeding; or issue a Notice of Schedule for Environmental Review. If a Notice of Schedule for Environmental Review is issued, it will indicate, among other milestones, the anticipated date for the Commission staff's issuance of the final environmental impact statement (FEIS) or EA for this proposal. The filing of the EA in the Commission's public record for this proceeding or the issuance of a Notice of Schedule for Environmental Review will serve to notify federal and state agencies of the timing for the completion of all necessary reviews, and the subsequent need to complete all federal authorizations within 90 days of the date of issuance of the Commission staff's FEIS or EA.

There are two ways to become involved in the Commission's review of this project. First, any person wishing to obtain legal status by becoming a party to the proceedings for this project should, on or before the comment date stated below, file with the Federal Energy Regulatory Commission, 888 First Street NE., Washington, DC 20426, a motion to intervene in accordance with the requirements of the Commission's Rules of Practice and Procedure (18 CFR 385.214 or 385.211) and the Regulations under the NGA (18 CFR 157.10). A person obtaining party status will be placed on the service list maintained by the Secretary of the Commission and will receive copies of all documents filed by the applicant and by all other parties. A party must submit seven copies of filings made with the Commission and must mail a copy to the applicant and to every other party in the proceeding. Only parties to the proceeding can ask for court review of Commission orders in the proceeding.

However, a person does not have to intervene in order to have comments considered. The second way to participate is by filing with the Secretary of the Commission, as soon as possible, an original and two copies of comments in support of or in opposition to this project. The Commission will consider these comments in determining the appropriate action to be taken, but the filing of a comment alone will not serve to make the filer a party to the proceeding. The Commission's rules require that persons filing comments in opposition to the project provide copies of their protests only to the party or parties directly involved in the protest.

The Commission strongly encourages electronic submission of protests and interventions in lieu of paper using the ''eFiling'' link at *http://www.ferc.gov.* Persons unable to file electronically should submit an original and seven copies of the protest or intervention to the Federal Energy Regulatory

Commission, 888 First Street NE., Washington, DC 20426. This filing is accessible on-line at *http://www.ferc.gov* using the ''eLibrary'' link and is available for review in the Commission's Public Reference Room in Washington, DC. There is an ''eSubscription'' link on the Web site that enables subscribers to receive email notification when a document is added to a subscribed docket(s). For assistance with any FERC Online service, please email *FERCOnlineSupport@ferc.gov*, or call (866) 208–3676 (toll free). For TTY, call (202) 502–8659.

Comment Date: 5:00 p.m. Eastern Time on December 6, 2013.

Dated: November 15, 2013.

Kimberly D. Bose,

Secretary.

[FR Doc. 2013–27953 Filed 11–20–13; 8:45 am]

BILLING CODE 6717–01–P

DEPARTMENT OF ENERGY

Federal Energy Regulatory Commission

Notice of Effectiveness of Exempt Wholesale Generator Status

Buffalo Dunes Wind Project, LLC	EG13–49–000
Whitetail Wind Energy, LLC	EG13–50–000
Merlin One, LLC	EG13–51–000
Goal Line L.P.	EG13–52–000
RE Columbia 3 LLC	EG13–53–000
RE Columbia, LLC	EG13–54–000
RE Yakima LLC	EG13–55–000
Allegany Generating Station LLC	EG13–56–000

Take notice that during the month of October 2013, the status of the above-captioned entities as Exempt Wholesale Generators became effective by operation of the Commission's regulations. 18 CFR 366.7(a).

Dated: November 15, 2013.

Kimberly D. Bose,

Secretary.

[FR Doc. 2013–27955 Filed 11–20–13; 8:45 am]

BILLING CODE 6717–01–P

DEPARTMENT OF ENERGY

Federal Energy Regulatory Commission

[Docket No. CD14–10–000]

North Side Canal Company; Notice of Preliminary Determination of a Qualifying Conduit Hydropower Facility and Soliciting Comments and Motions To Intervene

On November 5, 2013, North Side Canal Company, filed a notice of intent to construct a qualifying conduit hydropower facility, pursuant to section 30 of the Federal Power Act, as amended by section 4 of the Hydropower Regulatory Efficiency Act of 2013 (HREA). The Head of U Canal Hydro Project would be located along North Side Canal Company's irrigation system on the U Canal in Jerome County, Idaho.

Applicant Contact: Alan W. Hansten, Manager, North Side Canal Company, Ltd., 921 North Lincoln, Jerome, ID 83338, Phone No. (208) 324–2319.

FERC Contact: Christopher Chaney, Phone No. (202) 502–6778, email: *christopher.chaney@ferc.gov*.

Qualifying Conduit Hydropower Facility Description: The proposed project would consist of: (1) A proposed 30-foot-long by 30-foot-wide control building; (2) eight proposed siphon turbine/generating units, each with a capacity of 150 kilowatts, for a total installed capacity of 1,200 kilowatts; and (3) appurtenant facilities. The proposed project would have an estimated annual generating capacity of 4,200 megawatt-hours.

A qualifying conduit hydropower facility is one that is determined or deemed to meet all of the criteria shown in the table below.

TABLE 1—CRITERIA FOR QUALIFYING CONDUIT HYDROPOWER FACILITY

Statutory provision	Description	Satisfies (Y/N)
FPA 30(a)(3)(A), as amended by HREA	The conduit the facility uses is a tunnel, canal, pipeline, aqueduct, flume, ditch, or similar manmade water conveyance that is operated for the distribution of water for agricultural, municipal, or industrial consumption and not primarily for the generation of electricity.	Y
FPA 30(a)(3)(C)(i), as amended by HREA	The facility is constructed, operated, or maintained for the generation of electric power and uses for such generation only the hydroelectric potential of a non-federally owned conduit.	Y
FPA 30(a)(3)(C)(ii), as amended by HREA.	The facility has an installed capacity that does not exceed 5 megawatts	Y
FPA 30(a)(3)(C)(iii), as amended by HREA.	On or before August 9, 2013, the facility is not licensed, or exempted from the licensing requirements of Part I of the FPA.	Y

Preliminary Determination: Based upon the above criteria, Commission staff preliminarily determines that the proposal satisfies the requirements for a qualifying conduit hydropower facility not required to be licensed or exempted from licensing.

Comments and Motions To Intervene: Deadline for filing comments contesting whether the facility meets the qualifying criteria is 45 days from the issuance date of this notice.

Deadline for filing motions to intervene is 30 days from the issuance date of this notice.

Anyone may submit comments or a motion to intervene in accordance with the requirements of Rules of Practice and Procedure, 18 CFR 385.210 and 385.214. Any motions to intervene must be received on or before the specified deadline date for the particular proceeding.

Filing and Service of Responsive Documents: All filings must (1) bear in all capital letters the ''COMMENTS CONTESTING QUALIFICATION FOR A CONDUIT HYDROPOWER FACILITY'' or ''MOTION TO INTERVENE,'' as applicable; (2) state in the heading the name of the applicant and the project number of the application to which the filing responds; (3) state the name, address, and telephone number of the person filing; and (4) otherwise comply with the requirements of sections 385.2001 through 385.2005 of the Commission's regulations.[1] All comments contesting Commission staff's preliminary determination that the facility meets the qualifying criteria must set forth their evidentiary basis.

The Commission strongly encourages electronic filing. Please file motions to intervene and comments using the Commission's eFiling system at *http://www.ferc.gov/docs-filing/efiling.asp*. Commenters can submit brief comments up to 6,000 characters, without prior

[1] 18 CFR 385.2001–2005 (2013).

registration, using the eComment system at *http://www.ferc.gov/docs-filing/ecomment.asp*. You must include your name and contact information at the end of your comments. For assistance, please contact FERC Online Support at *FERCOnlineSupport@ferc.gov,* (866) 208–3676 (toll free), or (202) 502–8659 (TTY). In lieu of electronic filing, please send a paper copy to: Secretary, Federal Energy Regulatory Commission, 888 First Street NE., Washington, DC 20426. A copy of all other filings in reference to this application must be accompanied by proof of service on all persons listed in the service list prepared by the Commission in this proceeding, in accordance with 18 CFR 4.34(b) and 385.2010.

Locations of Notice of Intent: Copies of the notice of intent can be obtained directly from the applicant or such copies can be viewed and reproduced at the Commission in its Public Reference Room, Room 2A, 888 First Street NE., Washington, DC 20426. The filing may also be viewed on the Web at *http://www.ferc.gov/docs-filing/elibrary.asp* using the ''eLibrary'' link. Enter the docket number (e.g., CD14–10) in the docket number field to access the document. For assistance, call toll-free 1–866–208–3676 or email *FERCOnlineSupport@ferc.gov*. For TTY, call (202) 502–8659.

Dated: November 14, 2013.

Kimberly D. Bose,

Secretary.

[FR Doc. 2013–27958 Filed 11–20–13; 8:45 am]

BILLING CODE 6717–01–P

DEPARTMENT OF ENERGY

Federal Energy Regulatory Commission

[Docket No. CP14–19–000]

Questar Pipeline Company; Notice of Request Under Blanket Authorization

Take notice that on November 7, 2013, Questar Pipeline Company (Questar), 333 South State Street, P. 45360, Salt Lake City, Utah, filed in Docket No. CP14–19–000, an application pursuant to sections 157.205 and 157.208(b) of the Commission's Regulations under the Natural Gas Act (NGA) as amended, requesting authorization to replace a section of its existing Main Line (ML) 3 in Davis and Morgan Counties, Utah. The authorizations are requested under Questar's blanket certificate issued in Docket No. CP82–491–000,[1] all as more fully set forth in the application which is on file with the Commission and open to public inspection.

Questar proposes in its Weber Canyon Replacement Project (Project) to replace approximately 3.26 miles of its existing 16-inch ML 3 pipeline on the south side of Interstate 84 in Weber Canyon southeast of Ogden Utah. Questar proposes to isolate the line, remove the existing pipe, and install new pipe in the same trench within the existing right-of-way. The estimated cost of the project is approximately $29,392,000.

The Project will have no impact on the certificated parameters of the Questar pipeline. In addition, there will be no abandonment or decrease in service to Questar customers as a result of the proposed Project. As described in the application, ground-disturbing activities necessary to construct the project will result in minimal environmental impacts. Questar also requests waiver of the requirements of Commissions regulations section 157(203)(d)(2) regarding a weekly Environmental Inspector's report.

The filing may also be viewed on the Web at *http://www.ferc.gov* using the ''eLibrary'' link. Enter the docket number excluding the last three digits in the docket number field to access the document. For assistance, please contact FERC Online Support at *FERCOnlineSupport@ferc.gov* or toll free at (866) 208–3676, or TTY, contact (202) 502–8659.

Any questions concerning this application should be directed to L. Bradley Burton, General Manager, Federal Regulatory Affairs, and FERC Compliance Officer, Questar Pipeline Company, 180 East 100 South, P.O. Box 45360, Salt Lake City, Utah 84145–0360, phone (801)324–2459, *email brad.burton@questar.com.*

Any person or the Commission's staff may, within 60 days after issuance of the instant notice by the Commission, file pursuant to Rule 214 of the Commission's Procedural Rules (18 CFR 385.214) a motion to intervene or notice of intervention and pursuant to Section 157.205 of the regulations under the NGA (18 CFR 157.205), a protest to the request. If no protest is filed within the time allowed therefore, the proposed activity shall be deemed to be authorized effective the day after the time allowed for filing a protest. If a protest is filed and not withdrawn within 30 days after the allowed time for filing a protest, the instant request shall be treated as an application for authorization pursuant to Section 7 of the NGA.

Persons who wish to comment only on the environmental review of this project should submit an original and two copies of their comments to the Secretary of the Commission. Environmental commenter's will be placed on the Commission's environmental mailing list, will receive copies of the environmental documents, and will be notified of meetings associated with the Commission's environmental review process. Environmental commenter's will not be required to serve copies of filed documents on all other parties. However, the non-party commentary, will not receive copies of all documents filed by other parties or issued by the Commission (except for the mailing of environmental documents issued by the Commission) and will not have the right to seek court review of the Commission's final order.

The Commission strongly encourages electronic filings of comments, protests and interventions in lieu of paper using the ''eFiling'' link at *http://www.ferc.gov.* Persons unable to file electronically should submit an original and 7 copies of the protest or intervention to the Federal Energy Regulatory Commission, 888 First Street NE., Washington, DC 20426.

Comment Date: 5:00 p.m. Eastern Time on January 14, 2014.

Dated: November 15, 2013.

Kimberly D. Bose,

Secretary.

[FR Doc. 2013–27954 Filed 11–20–13; 8:45 am]

BILLING CODE 6717–01–P

[1] See Mountain Fuel Resources, Inc., 20 FERC ¶ 62,580 (1982).

DEPARTMENT OF ENERGY

Federal Energy Regulatory Commission

[Project No. 13102–003—Alabama Demopolis Lock and Dam Hydroelectric Project]

Birch Power Company; Notice of Proposed Revised Restricted Service List for a Programmatic Agreement

Rule 2010 of the Federal Energy Regulatory Commission's (Commission) Rules of Practice and Procedure, 18 CFR 385.2010, provides that, to eliminate unnecessary expense or improve administrative efficiency, the Secretary may establish a restricted service list for a particular phase or issue in a proceeding. The restricted service list should contain the names of persons on the service list who, in the judgment of the decisional authority establishing the list, are active participants with respect to the phase or issue in the proceeding for which the list is established.

The Commission staff is consulting with the Alabama Historical

Commission (Alabama SHPO) and the Advisory Council on Historic Preservation (Advisory Council) pursuant to the Advisory Council's regulations, 36 CFR Part 800, implementing section 106 of the National Historic Preservation Act, *as amended,* (16 U.S.C. 470f), to prepare a Programmatic Agreement for managing properties included in, or eligible for inclusion in, the National Register of Historic Places that could be affected by issuance of a license for the Demopolis Lock and Dam Hydroelectric Project.

The Programmatic Agreement, when executed by the Commission and the Alabama SHPO, would satisfy the Commission's section 106 responsibilities for all individual undertakings carried out in accordance with the license until the license expires or is terminated (36 CFR 800.13[e]). The Commission's responsibilities pursuant to section 106 for the project would be fulfilled through the Programmatic Agreement, which Commission staff proposes to draft in consultation with Birch Power Company, the Alabama SHPO, the U.S. Army Corps of Engineers, the Poarch Band of Creek Indians, Alabama-Coushatta Tribe of Texas, Alabama-Quassarte Tribal Town, United Keetoowah Band of Cherokee Indians, Choctaw Nation of Oklahoma, Jena Band of Choctaw Indians, Muscogee (Creek) Nation, and Kialegee Tribal Town of the Muscogee (Creek) Nation.

For purposes of commenting on the Programmatic Agreement, we propose to make changes to the existing restricted service list, issued on August 12, 2013, for Project No. 13102–003 as follows:

Replace ''Joseph Giliberti'' with ''Matthew Grunewald.''

Change the address for Lisa C. Baker, Acting THPO, United Keetoowah Band of Cherokee Indians, from ''20525 S. Jules Valdez Road, Tahlequah, OK 74464'' to ''P.O. Box 746, Tahlequah, OK 74465.''

Change the address for Chief George Tiger or Representative, Kialegee Tribal Town of the Muscogee (Creek) Nation, from ''P.O. Box 146, Wetumpka, OK 74883'' to ''P.O. Box 188, Okemah, OK 74859.''

Dated: November 14, 2013.

Kimberly D. Bose,

Secretary.

[FR Doc. 2013–27957 Filed 11–20–13; 8:45 am]

BILLING CODE 6717–01–P

ENVIRONMENTAL PROTECTION AGENCY

[EPA–HQ–OPP–2012–0780; FRL–9403–1]

Issuance of an Experimental Use Permit

AGENCY: Environmental Protection Agency (EPA).

ACTION: Notice.

SUMMARY: EPA has granted an experimental use permit (EUP) to the pesticide applicant Monsanto Company. An EUP permits use of a pesticide for experimental or research purposes only in accordance with the limitations in the permit.

FOR FURTHER INFORMATION CONTACT: Robert McNally, Biopesticides and Pollution Prevention Division (7511P), Office of Pesticide Programs, Environmental Protection Agency, 1200 Pennsylvania Ave. NW., Washington, DC 20460–0001; telephone number: (703) 305–7090; email address: *BPPDFRNotices@epa.gov.*

SUPPLEMENTARY INFORMATION:

I. General Information

A. Does this action apply to me?

This action is directed to the public in general. Although this action may be of particular interest to those persons who conduct or sponsor research on pesticides, the Agency has not attempted to describe all the specific entities that may be affected by this action.

B. How can I get copies of this document and other related information?

The docket for this action, identified by docket identification (ID) number EPA–HQ–OPP–2012–0780, is available at *http://www.regulations.gov* or at the Office of Pesticide Programs Regulatory Public Docket (OPP Docket) in the Environmental Protection Agency Docket Center (EPA/DC), EPA West Bldg., Rm. 3334, 1301 Constitution Ave. NW., Washington, DC 20460–0001. The Public Reading Room is open from 8:30 a.m. to 4:30 p.m., Monday through Friday, excluding legal holidays. The telephone number for the Public Reading Room is (202) 566–1744, and the telephone number for the OPP Docket is (703) 305–5805. Please review the visitor instructions and additional information about the docket available at *http://www.epa.gov/dockets.*

II. EUP

EPA has issued the following EUP:

524–EUP–104. (EPA–HQ–OPP–2012–0780). Issuance. Monsanto Company, 800 N. Lindbergh Blvd., St. Louis, MO 63167. This EUP, issued on March 1, 2013, allows planting and associated activities, e.g., collection of field data, harvesting, processing of corn plant incorporated protectants (PIPs) seeds containing active ingredients, corn PIPs with MON 87410 and MON 87411. The PIPs contain a Dv49 double stranded RNA (dsRNA) suppression cassette in combination with *Bacillus thuringiensis* (*Bt*) Cry Proteins (Cry1A.105, Cry2Ab2, Cry1F, Vip3Aa20, Cry3Bb1, Cry34Ab1/Cry35Ab1, and eCry3.1Ab). Tests to control corn root worm (CRW) are authorized from March 1, 2013, through February 28, 2015. Field trials will be conducted in the U.S. territory of Puerto Rico and in the following 22 U.S. states: Arkansas, California, Colorado, Georgia, Hawaii, Idaho, Illinois, Indiana, Iowa, Kansas, Michigan, Minnesota, Mississippi, Missouri, Nebraska, North Carolina, Ohio, Pennsylvania, South Carolina, South Dakota, Tennessee, and Wisconsin. Approximately 3,392,742 pounds (lb) of seed containing 48.41 lb (21,958 grams) of active ingredient (2.54, 4.04, 1.57, 12.68, 2.2×10^{-5}, 8.45, 16.65, 0.41, and 2.07 lb of Cry1F, Cry1A.105, Cry2Ab2, Vip3Aa20, Dv49 dsRNA, Cry3Bb1, Cry34Ab1, Cry35Ab1, eCry3.1Ab, respectively) are to be planted over 20,893 acres, including *Bt* and dsRNA PIP (17,740) and non-PIP (3,153) acreage. The two protocols in the EUP include: (1) Seed development and increase for future testing including nursery observations of traits in various genetic backgrounds; and (2) product characterization work including phenotypic and agronomic observations, efficacy and yield benefit evaluations regulatory data generation.

Authority: 7 U.S.C. 136c.

List of Subjects

Environmental protection, Experimental use permits.

Dated: November 7, 2013.

Daniel J. Rosenblatt,

Acting Director, Registration Division, Office of Pesticide Programs.

[FR Doc. 2013–27994 Filed 11–20–13; 8:45 am]

BILLING CODE 6560–50–P

EXPORT-IMPORT BANK OF THE UNITED STATES

[Public Notice 2013–6008]

Agency Information Collection Activities: Comment Request

AGENCY: Export-Import Bank of the United States.

ACTION: Submission for OMB review and comments request.

Form Title: EIB 92–36 Application for Issuing Bank Credit Limit (IBCL) Under Lender or Exporter-Held Policies.

SUMMARY: The Export-Import Banks of the United States (Ex-Im Bank), as part of its continuing effort to reduce paperwork and respondent burden, invites the general public and other Federal Agencies to comment on the proposed information collection, as required by the Paperwork Reduction Act of 1995.

This collection of information is necessary, pursuant to 12 U.S.C. Sec. 635(a)(1), to determine eligibility of the applicant for Ex-Im Bank assistance.

The application tool can be reviewed at: *http://www.exim.gov/pub/pending/Form%20EIB%2092-36%20v3.pdf.*

DATES: Comments must be received on or before January 21, 2014 to be assured of consideration.

ADDRESSES: Comments may be submitted electronically on *WWW.REGULATIONS.GOV* or by mail to Michele Kuester, Export-Import Bank of the United States, 811 Vermont Ave. NW., Washington, DC.

SUPPLEMENTARY INFORMATION:

Title and Form Number: EIB 92–36 Application for Issuing Bank Credit Limit (IBCL) Under Lender or Exporter-Held Policies.

OMB Number: 3048–0016.

Type of Review: Regular.

Need and Use: This form is used by an insured exporter or lender (or broker acting on its behalf) in order to obtain approval for coverage of the repayment risk of an overseas bank. The information received allows Ex-Im Bank staff to make a determination of the creditworthiness of the foreign bank and the underlying export sale for Ex-Im Bank assistance under its programs.

This form has been updated to include a new Certification and Notices section as well as a new statement explaining Ex-Im Bank's limitation on support for goods subject to trade measures or sanctions.

Affected Public

This form affects entities involved in the export of U.S. goods and services.

Annual Number of Respondents: 480.

Estimated Time per Respondent: 1 hour.

Annual Burden Hours: 480 hours.

Frequency of Reporting of Use: As needed.

Government Expenses

Reviewing time per year: 480 hours.

Average Wages per Hour: $42.50.

Average Cost per Year: $20,400. (time * wages)

Benefits and Overhead: 20%.

Total Government Cost: $24,480.

Kalesha Malloy,

Agency Clearance Officer, Office of the Chief Information Officer.

[FR Doc. 2013–27962 Filed 11–20–13; 8:45 am]

BILLING CODE 6690–01–P

EXPORT-IMPORT BANK OF THE UNITED STATES

[Public Notice: 2013–0055]

Application for Final Commitment for a Long-Term Loan or Financial Guarantee in Excess of $100 Million: AP088285XX

AGENCY: Export-Import Bank of the United States.

ACTION: Notice.

SUMMARY: This Notice is to inform the public, in accordance with Section 3(c)(10) of the Charter of the Export-Import Bank of the United States (''Ex-Im Bank''), that Ex-Im Bank has received an application for final commitment for a long-term loan or financial guarantee in excess of $100 million (as calculated in accordance with Section 3(c)(10) of the Charter). Comments received within the comment period specified below will be presented to the Ex-Im Bank Board of Directors prior to final action on this Transaction.

DATES: Comments must be received on or before December 16, 2013 to be assured of consideration before final consideration of the transaction by the Board of Directors of Ex-Im Bank.

ADDRESSES: Comments may be submitted through Regulations.gov at *WWW.REGULATIONS.GOV.* To submit a comment, enter EIB–2013–0055 under the heading ''Enter Keyword or ID'' and select Search. Follow the instructions provided at the Submit a Comment screen. Please include your name, company name (if any) and EIB–2013–0055 on any attached document.

Reference: AP088285XX.

Purpose and Use:

Brief description of the purpose of the transaction:

To support the export of U.S.-manufactured aircraft to Russia.

Brief non-proprietary description of the anticipated use of the items being exported:

To provide passenger air service between Russia and other countries.

To the extent that Ex-Im Bank is reasonably aware, the item(s) being exported may be used to produce exports or provide services in competition with the exportation of goods or provision of services by a United States industry.

Parties:

Principal Supplier: The Boeing Company.

Obligor: OJSC VEB-Leasing.

Guarantor(s): N/A.

End-User: Aeroflot Russian Airlines.

Description of Items Being Exported: Boeing 777 aircraft.

Information on Decision: Information on the final decision for this transaction will be available in the ''Summary Minutes of Meetings of Board of Directors'' on *http://exim.gov/newsandevents/boardmeetings/board/.*

Confidential Information: Please note that this notice does not include confidential or proprietary business information; information which, if disclosed, would violate the Trade Secrets Act; or information which would jeopardize jobs in the United States by supplying information that competitors could use to compete with companies in the United States.

Cristopolis Dieguez,

Program Specialist, Office of the General Counsel.

[FR Doc. 2013–27925 Filed 11–20–13; 8:45 am]

BILLING CODE 6690–01–P

EXPORT-IMPORT BANK

[Public Notice: 2013–0054]

Application for Final Commitment for a Long-Term Loan or Financial Guarantee in Excess of $100 Million: AP086750XX

AGENCY: Export-Import Bank of the United States.

ACTION: Notice.

SUMMARY: This Notice is to inform the public, in accordance with Section 3(c)(10) of the Charter of the Export-Import Bank of the United States (''Ex-Im Bank''), that Ex-Im Bank has received an application for final commitment for a long-term loan or financial guarantee in excess of $100 million (as calculated in accordance with Section 3(c)(10) of the Charter). Comments received within the comment period specified below will be presented to the Ex-Im Bank Board of Directors prior to final action on this Transaction. Comments received will be made available to the public.

DATES: Comments must be received on or before December 16, 2013 to be assured of consideration before final consideration of the transaction by the Board of Directors of Ex-Im Bank.

ADDRESSES: Comments may be submitted through Regulations.gov at *WWW.REGULATIONS.GOV.* To submit a comment, enter EIB–2013–0054 under the heading ''Enter Keyword or ID'' and

select Search. Follow the instructions provided at the Submit a Comment screen. Please include your name, company name (if any) and EIB–2013–0054 on any attached document.

Reference: AP086750XX.

Purpose and Use:

Brief description of the purpose of the transaction:

To support the export of Caterpillar mining equipment, General Electric locomotives and Atlas Copco drilling equipment to Australia.

Brief non-proprietary description of the anticipated use of the items being exported:

To be used in the construction and operation of an integrated iron ore mine with processing plant, rail and port facilities in Australia.

To the extent that Ex-Im Bank is reasonably aware, the item(s) being exported may be used to produce exports or provide services in competition with the exportation of goods or provision of services by a United States industry.

Parties:

Principal Supplier: Caterpillar, General Electric, Atlas Copco.

Obligor: Roy Hill Holdings Pty. Ltd.

Guarantor(s): None.

Description of Items Being Exported:

Caterpillar mining equipment, General Electric locomotives and Atlas Copco drilling equipment.

Information on Decision: Information on the final decision for this transaction will be available in the ''Summary Minutes of Meetings of Board of Directors'' on *http://exim.gov/newsandevents/boardmeetings/board/.*

Confidential Information: Please note that this notice does not include confidential or proprietary business information; information which, if disclosed, would violate the Trade Secrets Act; or information which would jeopardize jobs in the United States by supplying information that competitors could use to compete with companies in the United States.

Cristopolis Dieguez,

Program Specialist, Office of the General Counsel.

[FR Doc. 2013–27915 Filed 11–20–13; 8:45 am]

BILLING CODE 6690–01–P

FEDERAL COMMUNICATIONS COMMISSION

[DA 13–2169]

Consumer Advisory Committee

AGENCY: Federal Communications Commission.

ACTION: Notice.

SUMMARY: The Commission announces the next meeting date, time, and agenda of its Consumer Advisory Committee (hereinafter the ''Committee''). The purpose of the Committee is to make recommendations to the Commission regarding matters within the jurisdiction of the Commission and to facilitate the participation of all consumers in proceedings before the Commission.

DATES: The next meeting of the Committee will take place on Monday, December 16, 2013.

ADDRESSES: Federal Communications Commission, 445 12th Street SW., Washington, DC 20554.

FOR FURTHER INFORMATION CONTACT: Scott Marshall, Consumer and Governmental Affairs Bureau, (202) 418–2809 (voice or Relay), or email *Scott.Marshall@fcc.gov.*

SUPPLEMENTARY INFORMATION: This is a summary of the Commission's document DA 13–2169, released November 13, 2013 announcing the agenda, date, and time of the Committee's next meeting (commencing at 9:00 a.m. and adjourning at 4:00 p.m.) to be held in the Commission Meeting Room TW–C305.

At its December 16, 2013 meeting, the Committee is expected to consider recommendations concerning cramming and the reporting of consumer complaint data. The Committee may also consider other recommendations from its working groups, and may also receive briefings from FCC staff and outside speakers on matters of interest to the Committee. A limited amount of time will be available on the agenda for comments from the public. The public may ask questions of presenters via email *livequestions@fcc.gov* or via Twitter using the hashtag #fcclive. In addition, the public may also follow the meeting on *Twitter@fcc* or via the Commission's Facebook page at *www.facebook.com/fcc.* Alternatively, members of the public may send written comments to: Scott Marshall, Designated Federal Officer of the Committee at the address provided above.

The meeting is open to the public, and the site is fully accessible to people using wheelchairs or other mobility aids. Sign language interpreters, open captioning, assistive listening devices, and Braille copies of the agenda and handouts will be provided on site. Meetings are also broadcast live with open captioning over the Internet from the FCC Live Web page at *www.fcc.gov/live/.*

Simultaneous with the webcast, the meeting will be available through Accessible Event, a service that works with your web browser to make presentations accessible to people with disabilities. You can listen to the audio and use a screen reader to read displayed documents. You can also watch the video with open captioning. The Web site to access Accessible Event is *http://accessibleevent.com.* The Web page prompts for an Event Code which is 005202376. To learn about the features of Accessible Event, consult its User's Guide at: *http://accessibleevent.com/doc/user guide/.*

Other reasonable accommodations for people with disabilities are available upon request. The request should include a detailed description of the accommodation needed and contact information. Please provide as much advance notice as possible; last minute requests will be accepted, but may not be possible to fill. To request an accommodation, send an email to *fcc504@fcc.gov* or call the Consumer and Governmental Affairs Bureau at 202–418–0530 (voice), 202–418–0432 (TTY).

Federal Communications Commission.

Kris Anne Monteith,

Acting Chief, Consumer and Governmental Affairs Bureau.

[FR Doc. 2013–27978 Filed 11–20–13; 8:45 am]

BILLING CODE 6712–01–P

FEDERAL COMMUNICATIONS COMMISSION

Federal Advisory Committee Act; Communications Security, Reliability, and Interoperability Council

AGENCY: Federal Communications Commission.

ACTION: Notice.

SUMMARY: In accordance with the Federal Advisory Committee Act, this notice advises interested persons that the Federal Communications Commission's (FCC or Commission) Communications Security, Reliability, and Interoperability Council (CSRIC) IV will hold its second meeting. At the meeting, each of the Working Groups will present an update on topics including emergency warning systems, 9–1–1 location accuracy, distributed denial-of-service (DDoS), and cybersecurity best practices.

DATES: December 4, 2013.

ADDRESSES: Federal Communications Commission, Room TW–C305 (Commission Meeting Room), 445 12th Street SW., Washington, DC 20554.

FOR FURTHER INFORMATION CONTACT: Jeffery Goldthorp, Designated Federal Officer, (202) 418–1096 (voice) or

jeffery.goldthorp@fcc.gov (email); or Lauren Kravetz, Deputy Designated Federal Officer, (202) 418–7944 (voice) or *lauren.kravetz@fcc.gov* (email).

SUPPLEMENTARY INFORMATION: The meeting will be held on December 4, 2013, from 1:00 p.m. to 5:00 p.m. in the Commission Meeting Room of the Federal Communications Commission, Room TW–C305, 445 12th Street SW., Washington, DC 20554.

The CSRIC is a Federal Advisory Committee that will provide recommendations to the FCC regarding best practices and actions the FCC can take to ensure the security, reliability, and interoperability of communications systems. On March 19, 2013, the FCC, pursuant to the Federal Advisory Committee Act, renewed the charter for the CSRIC for a period of two years through March 18, 2015. Each of the ten Working Groups of this most recently-chartered CSRIC is described in more detail at *http://www.fcc.gov/encyclopedia/communications-security-reliability-and-interoperability-council-iv*.

The meeting on December 4, 2013, will be the second meeting of the CSRIC under the current charter. The FCC will attempt to accommodate as many attendees as possible; however, admittance will be limited to seating availability. The Commission will provide audio and/or video coverage of the meeting over the Internet from the FCC's Web page at *http://www.fcc.gov/live*. The public may submit written comments before the meeting to Jeffery Goldthorp, CSRIC Designated Federal Officer, by email to *jeffery.goldthorp@fcc.gov* or U.S. Postal Service Mail to Jeffery Goldthorp, Associate Bureau Chief, Public Safety and Homeland Security Bureau, Federal Communications Commission, 445 12th Street SW., Room 7–A325, Washington, DC 20554.

Open captioning will be provided for this event. Other reasonable accommodations for people with disabilities are available upon request. Requests for such accommodations should be submitted via email to *fcc504@fcc.gov* or by calling the Consumer & Governmental Affairs Bureau at (202) 418–0530 (voice), (202) 418–0432 (tty). Such requests should include a detailed description of the accommodation needed. In addition, please include a way the FCC can contact you if it needs more information. Please allow at least five days' advance notice; last-minute requests will be accepted, but may be impossible to fill.

Federal Communications Commission.

Marlene H. Dortch,

Secretary.

[FR Doc. 2013–27844 Filed 11–20–13; 8:45 am]

BILLING CODE 6712–01–P

FEDERAL MARITIME COMMISSION

Ocean Transportation Intermediary License Applicants

The Commission gives notice that the following applicants have filed an application for an Ocean Transportation Intermediary (OTI) license as a Non-Vessel-Operating Common Carrier (NVO) and/or Ocean Freight Forwarder (OFF) pursuant to section 19 of the Shipping Act of 1984 (46 U.S.C. 40101). Notice is also given of the filing of applications to amend an existing OTI license or the Qualifying Individual (QI) for a licensee.

Interested persons may contact the Office of Ocean Transportation Intermediaries, Federal Maritime Commission, Washington, DC 20573, by telephone at (202) 523–5843 or by email at *OTI@fmc.gov.*

Amerifreight (N.A.), Inc. dba Freight Team dba iGlobal US (NVO & OFF), 15930 Valley Boulevard, City of Industry, CA 91744. Officers: Kwong Chi (A.K.A. Elton) Chung, President (QI), James Lin, Secretary, Application Type: QI Change.

Amexlog Corporation dba Amex Logistics Corp (NVO & OFF), 1970 NW 70th Avenue, Miami, FL 33126. Officers: Jorge X. de Tuya, Vice President (QI), Orestes F. Romero, President, Application Type: New NVO & OFF License.

Canfleet Logistics Ltd. (NVO), 1408–700 West Pender Street, Vancouver, B.C. V6C 1G8. Officers: Monica H. Yen, President (QI), Vincent Yen, Secretary, Application Type: New NVO License.

CTS Global Logistics (Georgia) Inc. dba CTS Global Supply Chain Solutions (NVO & OFF), 5192 Southridge Parkway, Suite 117, Atlanta, GA 30349. Officers: Zong Wen (David) Chen, Vice President (QI), Xian-Zhong (David) Cai, President, Application Type: QI Change.

DS Logistics Global, Inc. (NVO), 13353 Alondra Blvd., Suite 207, Santa Fe Springs, CA 90670. Officer: Susan W. Lee, President (QI), Application Type: New NVO License.

International Logistics Associates LLC (NVO & OFF), 1852 Holly Road, North Brunswick, NJ 08902. Officers: Ravi S. Sarvothaman, Member (QI), Man Kong L. Suen, Member, Application Type: New NVO & OFF License.

Jacobson Global Logistics, Inc. (NVO & OFF), 18209 80th Avenue South, Suite A, Kent, WA 98032. Officers: Jeanne H. Sargent, Vice President (QI), James G. Smith, CFO, Application Type: QI Change.

Thomas M. Beidleman dba A.C.S. Forwarding (OFF), 2964 Alvarado Street, Terminal G, San Leandro, CA 94577. Officer: Thomas M. Beidleman, Sole Proprietor (QI), Application Type: Trade Name Change to Blue Ocean Express.

United Harbour Logistics LLC (NVO), 2251 S. Bon View Avenue, Ontario, CA 91761, Officer: Phuong (A.K.A. Jay) La, Member (QI), Application Type: New NVO License.

By the Commission.

Dated: November 15, 2013.

Karen V. Gregory,

Secretary.

[FR Doc. 2013–27842 Filed 11–20–13; 8:45 am]

BILLING CODE 6730–01–P

FEDERAL RESERVE SYSTEM

Formations of, Acquisitions by, and Mergers of Bank Holding Companies

The companies listed in this notice have applied to the Board for approval, pursuant to the Bank Holding Company Act of 1956 (12 U.S.C. 1841 *et seq.*) (BHC Act), Regulation Y (12 CFR Part 225), and all other applicable statutes and regulations to become a bank holding company and/or to acquire the assets or the ownership of, control of, or the power to vote shares of a bank or bank holding company and all of the banks and nonbanking companies owned by the bank holding company, including the companies listed below.

The applications listed below, as well as other related filings required by the Board, are available for immediate inspection at the Federal Reserve Bank indicated. The applications will also be available for inspection at the offices of the Board of Governors. Interested persons may express their views in writing on the standards enumerated in the BHC Act (12 U.S.C. 1842(c)). If the proposal also involves the acquisition of a nonbanking company, the review also includes whether the acquisition of the nonbanking company complies with the standards in section 4 of the BHC Act (12 U.S.C. 1843). Unless otherwise noted, nonbanking activities will be conducted throughout the United States.

Unless otherwise noted, comments regarding each of these applications must be received at the Reserve Bank indicated or the offices of the Board of

Governors not later than December 16, 2013.

A. Federal Reserve Bank of Dallas (E. Ann Worthy, Vice President) 2200 North Pearl Street, Dallas, Texas 75201–2272:

1. *Cistern, LLC and Flatonia Investments, LLC,* both in Houston, Texas; to become bank holding companies by acquiring 100 percent of the voting shares of The Columbia Savings Bank, Cincinnati, Ohio.

Board of Governors of the Federal Reserve System, November 18, 2013.

Michael J. Lewandowski,

Associate Secretary of the Board.

[FR Doc. 2013–27923 Filed 11–20–13; 8:45 am]

BILLING CODE 6210–01–P

DEPARTMENT OF HEALTH AND HUMAN SERVICES

Meeting of the Advisory Group on Prevention, Health Promotion, and Integrative and Public Health

AGENCY: Office of the Surgeon General of the United States Public Health Service, Office of the Assistant Secretary for Health, Office of the Secretary, Department of Health and Human Services.

ACTION: Notice.

SUMMARY: In accordance with Section 10(a) of the Federal Advisory Committee Act, Public Law 92–463, as amended (5 U.S.C. App.), notice is hereby given that a meeting is scheduled to be held for the Advisory Group on Prevention, Health Promotion, and Integrative and Public Health (the ''Advisory Group''). The meeting will be open to the public. Information about the Advisory Group and the agenda for this meeting can be obtained by accessing the following Web site: *http://www.surgeongeneral.gov/initiatives/prevention/advisorygrp/index.html.*

DATES: The meeting will be held on December 11, 2013 from 3:00–5:00 p.m. EST via teleconference. More information can be found at: *http://www.surgeongeneral.gov/initiatives/prevention/advisorygrp/index.html.*

FOR FURTHER INFORMATION CONTACT: Office of the Surgeon General, 200 Independence Ave. SW.; Hubert H. Humphrey Building, Room 701H; Washington, DC 20201; 202–205–9517; *prevention.council@hhs.gov.*

SUPPLEMENTARY INFORMATION: The Advisory Group is a non-discretionary federal advisory committee that was initially established under Executive Order 13544, dated June 10, 2010, to comply with the statutes under Section 4001 of the Patient Protection and Affordable Care Act, Public Law 111–148. Under Executive Order 13591, dated November 23, 2011, operation of the Advisory Group was terminated on September 30, 2012. On December 7, 2012, President Obama issued Executive Order 13631 to re-establish the Advisory Group until September 30, 2013. Authorization for the Advisory Group to continue to operate until September 30, 2015, was given under Executive Order 13652, dated September 30, 2013. The Advisory Group was established to assist in carrying out the mission of the National Prevention, Health Promotion, and Public Health Council (the Council). The Advisory Group provides recommendations and advice to the Council.

It is authorized for the Advisory Group to consist of not more than 25 non-federal members. The Advisory Group currently has 22 members who were appointed by the President. The membership includes a diverse group of licensed health professionals, including integrative health practitioners who have expertise in (1) worksite health promotion; (2) community services, including community health centers; (3) preventive medicine; (4) health coaching; (5) public health education; (6) geriatrics; and (7) rehabilitation medicine. Topics of discussion for the December 2013 meeting of the Advisory Group include an update from the National Prevention Council; discussion of the Education and Health Working Group recommendations; and discussion of the draft report to the Surgeon General.

Members of the public who wish to attend must register by 12:00 p.m. EST on December 4, 2013. Individuals should register for public attendance at *prevention.council@hhs.gov* by providing your full name and affiliation. The public will have the opportunity to provide comments to the Advisory Group; public comment will be limited to 3 minutes per speaker. Registration through the designated contact for the public comment session is also required. Any member of the public who wishes to have printed materials distributed to the Advisory Group for this scheduled meeting should submit material to the designed point of contact no later than 12:00 p.m. EST on December 4, 2013.

Dated: November 4, 2013.

Corinne M. Graffunder,

Designated Federal Officer, Advisory Group on Prevention, Health Promotion, and Integrative and Public Health, Office of the Surgeon General.

[FR Doc. 2013–27927 Filed 11–20–13; 8:45 am]

BILLING CODE 4163–18–P

DEPARTMENT OF HEALTH AND HUMAN SERVICES

Meeting of the Chronic Fatigue Syndrome Advisory Committee

AGENCY: Office of the Assistant Secretary for Health, Office of the Secretary, Department of Health and Human Services.

ACTION: Notice.

SUMMARY: As stipulated by the Federal Advisory Committee Act, the U.S. Department of Health and Human Services (HHS) is hereby giving notice that a meeting of the Chronic Fatigue Syndrome Advisory Committee (CFSAC) will take place via webinar. This webinar meeting will be open to the public. The webinar will include public comment session(s). Registration is required in advance for both public participants and comment. Any individual who wishes to participate in the public meeting and/or in the public comment session should register at *www.blsmeetings.net/CFSACdec2013/.*

DATES: The webinar meeting will be held on Tuesday, December 10, 2013 and Wednesday, December 11, 2013 from 12:00 p.m. until 5:00 p.m. (EST) on both days.

ADDRESSES: The meeting will be conducted by webinar.

FOR FURTHER INFORMATION CONTACT: Nancy C. Lee, M.D., Designated Federal Officer, Chronic Fatigue Syndrome Advisory Committee, Department of Health and Human Services, Office on Women's Health, 200 Independence Avenue SW., Room 712E, Washington, DC 20201. Phone: 202–690–7650; Fax: 202–401–4005. *cfsac@hhs.gov.*

SUPPLEMENTARY INFORMATION: The CFSAC is authorized under 42 U.S.C. 217a, Section 222 of the Public Health Service Act, as amended. The purpose of the CFSAC is to provide advice and recommendations to the Secretary of Health and Human Services, through the Assistant Secretary for Health (ASH), on issues related to chronic fatigue syndrome (CFS). The issues can include factors affecting access and care for persons with CFS; the science and definition of CFS; and broader public health, clinical, research and educational issues related to CFS.

The agenda for this meeting is being developed and will be posted on the CFSAC Web site *www.hhs.gov/advocomcfsac* and at *www.blsmeetings.net/CFSACdec2013/.* The webinar will be a ''virtual meeting'' using Adobe Acrobat Connect Pro Meeting, a Web conferencing product that allows users to conduct live meetings and presentations over the Internet.

Using Adobe Connect Pro Meeting software requires that you have an Internet connection, a Web browser, and the latest version of Adobe Flash Player to participate in the webinar. Adobe Connect Pro is supported by many operating systems, including Windows, Macintosh, Linux, and Solaris as well as the most widely used browsers, including Internet Explorer, Firefox, and Safari.

We recommend that you test your computer prior to participation. You can do this by going to *http://admin.adobeconnect.com/common/help/en/support/meeting_test.htm.* Instructions for accessing the webinar will be available at: *www.blsmeetings.net/CFSACdec2013/webinarinformation.cfm.*

This webinar will be limited to 500 participants. All individuals who want to view the webinar will need to register. You will receive instructions for accessing the webinar after you register. Members of the public will have the opportunity to provide public comment during the meeting via telephone, pre-recorded video, or written comments. Registration is required in advance in order to submit public comments. An individual who would like to present comments should note this when completing the registration form. The deadline to register and submit public comments is Friday, November 29, 2013. We will confirm your time for public comment via email by December 4, 2013. Please refer to the agenda for scheduled public comment periods. Each speaker via telephone or pre-recorded video will be limited to five minutes. We will give priority to individuals who have not provided public comment within the past 12 months. We will be unable to place international calls for public comments. We can accept written or prerecorded video testimony from international locations. Further details are available at *www.blsmeetings.net/CFSACdec2013/publicComments.cfm.*

Only testimony submitted for public comment and received in advance of the meeting are part of the official meeting record and will be posted to the CFSAC Web site. Materials submitted should not include sensitive personal information, such as social security number, birthdates, driver's license number, state identification or foreign country equivalent, passport number, financial account number, or credit or debit card number. If you wish to remain anonymous the document must specify this.

Dated: November 18, 2013.

Nancy C. Lee,

Designated Federal Officer, Chronic Fatigue Syndrome Advisory Committee, U.S. Department of Health and Human Services.

[FR Doc. 2013–27926 Filed 11–20–13; 8:45 am]

BILLING CODE 4150–42–P

DEPARTMENT OF HEALTH AND HUMAN SERVICES

Centers for Disease Control and Prevention

[30-Day–14–13ZJ]

Agency Forms Undergoing Paperwork Reduction Act Review

The Centers for Disease Control and Prevention (CDC) publishes a list of information collection requests under review by the Office of Management and Budget (OMB) in compliance with the Paperwork Reduction Act (44 U.S.C. Chapter 35). To request a copy of these requests, call (404) 639–7570 or send an email to *omb@cdc.gov.* Send written comments to CDC Desk Officer, Office of Management and Budget, Washington, DC 20503 or by fax to (202) 395–5806. Written comments should be received within 30 days of this notice.

Proposed Project

Emergency Epidemic Investigation Data Collections—New—Center for Surveillance, Epidemiology, and Laboratory Services (CSELS), Division of Scientific Education and Professional Development, DSEPD), Centers for Disease Control and Prevention (CDC).

Background and Brief Description

CDC previously has conducted Emergency Epidemic Investigations (EEIs) under Office of Management and Budget (OMB) control number 0920–0008. CDC is seeking a new OMB generic clearance for a 3-year period to collect vital information during EEIs in response to urgent outbreaks or events (i.e., natural, biological, chemical, nuclear, radiological) characterized by undetermined agents, undetermined sources, undetermined transmission, or undetermined risk factors. These EEIs represent a subset of those performed under OMB clearance 0920–0008.

Supporting effective emergency epidemic investigations is one of the most important ways that CDC protects the health of the public. CDC is frequently called upon to conduct EEIs at the request of local, state, or international health authorities seeking support to respond to urgent outbreaks or urgent public health-related events. In response to external partner requests, CDC provides necessary epidemiologic support to identify the agents, sources, modes of transmission, or risk factors to effectively implement rapid prevention and control measures to protect the public's health. Data collection is a critical component of the epidemiologic support provided by CDC; data are analyzed to determine the agents, sources, modes of transmission, or risk factors so that effective prevention and control measures can be implemented. During an unanticipated outbreak or event, immediate action by CDC is necessary to minimize or prevent public harm. The legal justification for EEIs are found in the Public Health Service Act (42 U.S.C. Sec. 301 [241](a)).

Successful investigations are dependent on rapid and flexible data collection that evolves during the investigation and is customized to the unique circumstances of each outbreak or event. Data collection elements will be those necessary to identify the agents, sources, mode of transmission, or risk factors. Examples of potential data collection methods include telephone or face-to-face interview; email, Web or other type of electronic questionnaire; paper-and-pencil questionnaire; focus groups; medical record review; laboratory record review; collection of clinical samples; and environmental assessment. Respondents will vary depending on the nature of the outbreak or event; examples of potential respondents include health care professionals, patients, laboratorians, and the general public. Participation in EEIs is voluntary and there are no anticipated costs to respondents other than their time. CDC will use the information gathered during EEIs to rapidly identify and effectively implement measures to minimize or prevent public harm.

CDC projects 60 EEIs in response to outbreaks or events characterized by undetermined agents, undetermined sources, undetermined transmission, or undetermined risk factors annually. The projected average number of respondents is 200 per EEI, for a total of 12,000 respondents. CDC estimates the average burden per response is 0.5 hours and each respondent will be asked to respond once. Therefore, the total estimated annual burden hours are 6,000. These estimates are based on the reported burden for EEIs that have been

performed during the previous two years.

ESTIMATED ANNUALIZED BURDEN HOURS

Type of respondents	Form name	Number of respondents	Number of responses per respondent	Average burden per response (in hrs.)
Emergency Epidemic Investigation Participants	Emergency Epidemic Investigation Data Collection Instruments.	12,000	1	30/60

LeRoy A. Richardson,

Chief, Information Collection Review Office, Office of Scientific Integrity, Office of the Associate Director for Science, Office of the Director, Center for Disease Control and Prevention.

[FR Doc. 2013–27942 Filed 11–20–13; 8:45 am]

BILLING CODE 4163–18–P

DEPARTMENT OF HEALTH AND HUMAN SERVICES

Centers for Disease Control and Prevention

[30-Day–14–0910]

Agency Forms Undergoing Paperwork Reduction Act Review

The Centers for Disease Control and Prevention (CDC) publishes a list of information collection requests under review by the Office of Management and Budget (OMB) in compliance with the Paperwork Reduction Act (44 U.S.C. Chapter 35). To request a copy of these requests, call (404) 639–7570 or send an email to *omb@cdc.gov.* Send written comments to CDC Desk Officer, Office of Management and Budget, Washington, DC or by fax to (202) 395–5806. Written comments should be received within 30 days of this notice.

Proposed Project

Message Testing for Tobacco Communication Activities (OMB No. 0920–0910, exp. 1/31/2015)—Revision—National Center for Chronic Disease Prevention and Health Promotion (NCCDPHP), Centers for Disease Control and Prevention (CDC).

Background and Brief Description

In 2012, CDC's Office on Smoking and Health (OSH) obtained OMB approval of a generic clearance to support the development of tobacco-related health messages (Message Testing for Tobacco Communication Activities (MTTCA), OMB No. 0920–0910, exp. 1/31/2015). A variety of information collection strategies are supported through this generic mechanism, including in-depth interviews, in-person focus groups, online focus groups, computer-assisted, in-person, or telephone interviews, and online surveys. Each project approved under the MTTCA framework is outlined in a project-specific Information Collection Request that describes its purpose and methodology.

The MTTCA clearance has been used to obtain OMB approval for a variety of message testing activities, with particular emphasis on communications supporting CDC's ''Tips from Former Smokers'' campaign. This national campaign, developed and implemented by OSH, is designed to increase public awareness of the health consequences of tobacco use and exposure to secondhand smoke. The MTTCA clearance has also supported formative research relating to the development of health messages that are not specifically associated with the national campaign.

In 2014, CDC will implement a new phase of the national tobacco education campaign and continue ongoing programmatic initiatives, such as maintaining the Media Campaign Resource Center (MCRC) and producing reports in conjunction with the Office of the Surgeon General. OSH will continue to use the MTTCA clearance to improve the quality of tobacco-related health messages associated with these activities and other tobacco control efforts of interest to CDC and its partners. OSH anticipates that a number of messages will be developed or refined for subpopulations as well as the general public. For example, screening activities may be conducted to involve individuals who are Lesbian, Gay, Bisexual, and Transgender (LGBT); individuals who are active military or veterans; individuals who suffer from depression and/or anxiety, and individuals who are English-speaking Hispanics. CDC may also request information about smoking status (e.g., current non-smoker, current smoker, ex-smoker).

CDC is requesting OMB approval to revise the generic MTTCA clearance, which was initially approved with the following estimates: 5,775 annualized burden hours and 14,974 annualized responses. The initial estimates were based on the number of respondents who were likely to participate in information collection activities such as focus groups, interviews, and surveys. The initial estimates did not specifically account for screening activities that are necessary to identify respondents from key target audiences. As a result, the initial MTTCA clearance underestimated the total number of responses needed to support data collection conducted in 2012 and 2013. The planned revision will adjust for screening and recruitment by allocating 20,000 additional respondents, and 667 additional burden hours, to the annualized estimates. To accommodate both planned activities and potential new initiatives or collaborations, CDC is also requesting modest increases in the number of respondents and burden hours associated with survey activities.

CDC's authority to collect information for public health purposes is provided by the Public Health Service Act (41 U.S.C. 241) Section 301.

The revision request does not affect the current expiration date of January 31, 2015. The estimated annualized number of responses will increase from 14,974 to 36,847 and the total estimated annualized burden hours will increase from 5,775 to 7,219. Participation is voluntary and there are no costs to respondents other than their time.

ESTIMATED ANNUALIZED BURDEN HOURS

Type of respondents	Data collection method	Number of respondents	Number of responses per respondent	Average burden per response
General Public and Special Populations	Screening and Recruitment	20,000	1	2/60
	In-depth Interviews (In Person, telephone, etc.).	67	1	1
	Focus Groups (In Person)	160	1	1.5
	Focus Groups (Online)	120	1	1
	Short Surveys (Online, Bulletin Board, etc.)	6,500	1	10/60
	Medium Surveys (Online)	8,500	1	25/60
	In-depth Surveys (Online)	1,500	1	1

Leroy A. Richardson,

Chief, Information Collection Review Office, Office of Scientific Integrity, Office of the Associate Director for Science, Office of the Director, Centers for Disease Control and Prevention.

[FR Doc. 2013–27928 Filed 11–20–13; 8:45 am]

BILLING CODE 4163–18–P

DEPARTMENT OF HEALTH AND HUMAN SERVICES

Food and Drug Administration

[Docket No. FDA–2013–P–0573]

Determination That BANZEL (Rufinamide) Tablet, 100 Milligrams, Was Not Withdrawn From Sale for Reasons of Safety or Effectiveness

AGENCY: Food and Drug Administration, HHS.

ACTION: Notice.

SUMMARY: The Food and Drug Administration (FDA) has determined that BANZEL (rufinamide) tablet, 100 milligrams (mg), was not withdrawn from sale for reasons of safety or effectiveness. This determination will allow FDA to approve abbreviated new drug applications (ANDAs) for rufinamide tablet, 100 mg, if all other legal and regulatory requirements are met.

FOR FURTHER INFORMATION CONTACT: Olivia Morris, Center for Drug Evaluation and Research, Food and Drug Administration, 10903 New Hampshire Ave., Bldg. 51, Rm. 6260, Silver Spring, MD 20993–0002, 301–796–3601.

SUPPLEMENTARY INFORMATION: In 1984, Congress enacted the Drug Price Competition and Patent Term Restoration Act of 1984 (Pub. L. 98–417) (the 1984 amendments), which authorized the approval of duplicate versions of drug products under an ANDA procedure. ANDA applicants must, with certain exceptions, show that the drug for which they are seeking approval contains the same active ingredient in the same strength and dosage form as the ''listed drug,'' which is a version of the drug that was previously approved. ANDA applicants do not have to repeat the extensive clinical testing otherwise necessary to gain approval of a new drug application (NDA).

The 1984 amendments include what is now section 505(j)(7) of the Federal Food, Drug, and Cosmetic Act (21 U.S.C. 355(j)(7)), which requires FDA to publish a list of all approved drugs. FDA publishes this list as part of the ''Approved Drug Products with Therapeutic Equivalence Evaluations,'' which is known generally as the Orange Book. Under FDA regulations, drugs are removed from the list if the Agency withdraws or suspends approval of the drug's NDA or ANDA for reasons of safety or effectiveness or if FDA determines that the listed drug was withdrawn from sale for reasons of safety or effectiveness (§ 314.162 (21 CFR 314.162)).

A person may petition the Agency to determine, or the Agency may determine on its own initiative, whether a listed drug was withdrawn from sale for reasons of safety or effectiveness. This determination may be made at any time after the drug has been withdrawn from sale, but must be made prior to approving an ANDA that refers to the listed drug (§ 314.161 (21 CFR 314.161)). FDA may not approve an ANDA that does not refer to a listed drug.

BANZEL (rufinamide) tablet, 100 mg, is the subject of NDA 21–911, held by Eisai Inc., and initially approved on November 14, 2008. BANZEL is indicated for adjunctive treatment of seizures associated with Lennox-Gastaut syndrome in children 4 years and older and adults.

Eisai Inc., has never marketed BANZEL (rufinamide) tablet, 100 mg. In previous instances (see, e.g., 72 FR 9763, 61 FR 25497), the Agency has determined that, for purposes of §§ 314.161 and 314.162, never marketing an approved drug product is equivalent to withdrawing the drug from sale.

Lupin Pharmaceuticals, Inc., submitted a citizen petition dated May 9, 2013 (Docket No. FDA–2013–P–0573), under 21 CFR 10.30, requesting that the Agency determine whether BANZEL (rufinamide) tablet, 100 mg, was withdrawn or discontinued from sale for reasons of safety or effectiveness.

After considering the citizen petition and reviewing Agency records and based on the information we have at this time, FDA has determined under § 314.161 that BANZEL (rufinamide) tablet, 100 mg, was not withdrawn for reasons of safety or effectiveness. The petitioner has identified no data or other information suggesting that BANZEL (rufinamide) tablet, 100 mg, was withdrawn for reasons of safety or effectiveness. We have carefully reviewed our files for records concerning the withdrawal of BANZEL (rufinamide) tablet, 100 mg, from sale. We have also independently evaluated relevant literature and data for possible postmarketing adverse events. We have reviewed the available evidence and determined that this product was not withdrawn from sale for reasons of safety or effectiveness.

Accordingly, the Agency will continue to list BANZEL (rufinamide) tablet, 100 mg, in the ''Discontinued Drug Product List'' section of the Orange Book. The ''Discontinued Drug Product List'' delineates, among other items, drug products that have been discontinued from marketing for reasons other than safety or effectiveness. ANDAs that refer to BANZEL (rufinamide) tablet, 100 mg, may be approved by the Agency as long as they meet all other legal and regulatory requirements for the approval of ANDAs. If FDA determines that labeling for this drug product should be revised

to meet current standards, the Agency will advise ANDA applicants to submit such labeling.

Dated: November 15, 2013.

Leslie Kux,

Assistant Commissioner for Policy.

[FR Doc. 2013–27874 Filed 11–20–13; 8:45 am]

BILLING CODE 4160–01–P

DEPARTMENT OF HEALTH AND HUMAN SERVICES

National Institutes of Health

Submission for OMB Review, 30-Day Comment Request: Certificate of Confidentiality Electronic Application System

SUMMARY: Under the provisions of Section 3507(a) (1)(D) of the Paperwork Reduction Act of 1995, the Office of Extramural Research (OER), National Institutes of Health (NIH) has submitted to the Office of Management and Budget (OMB) a request for review and approval of the information collection listed below. This proposed information collection was previously published in the **Federal Register** on April 29, 2013, page 2590 and allowed 60-days for public comment. No public comments were received. The purpose of this notice is to allow an additional 30 days for public comment. The Office of Extramural Research (OER), National Institutes of Health, may not conduct or sponsor, and the respondent is not required to respond to, an information collection that has been extended, revised, or implemented on or after October 1, 1995, unless it displays a currently valid OMB control number.

Direct Comments to OMB: Written comments and/or suggestions regarding the item(s) contained in this notice, especially regarding the estimated public burden and associated response time, should be directed to the: Office of Management and Budget, Office of Regulatory Affairs, *OIRA_submission@omb.eop.gov* or by fax to 202–395–6974, Attention: NIH Desk Officer.

DATES: *Comment Due Date:* Comments regarding this information collection are best assured of having their full effect if received within 30-days of the date of this publication.

FOR FURTHER INFORMATION CONTACT: To obtain a copy of the data collection plans and instruments, submit comments in writing, or request more information on the proposed project contact: Dr. Ann Hardy, NIH Extramural Human Research Protections Officer and NIH Coordinator, Certificates of Confidentiality, 3701 Rockledge Dr., Rm. 3002, Bethesda, MD 20892, or call non-toll-free number (301) 435–2690 or Email your request, including your address to: *hardyan@od.nih.gov*. Formal requests for additional plans and instruments must be requested in writing.

Proposed Collection: Certificate of Confidentiality Electronic Application System, 0925-New, Office of Extramural Research (OER), National Institutes of Health (NIH).

Need and Use of Information Collection: This application system will provide one electronic form to be used by all research organizations that wish to request a Certificate of Confidentiality (CoC) from NIH. As described in the authorizing legislation (Section 301(d) of the Public Health Service Act, 42 U.S.C. § 241(d)), CoCs are issued by the agencies of Department of Health and Human Services (DHHS), including NIH, to authorize researchers conducting sensitive research to protect the privacy of human research subjects by enabling them to refuse to release names and identifying characteristics of subjects to anyone not connected with the research. At NIH, the issuance of CoCs has been delegated to the individual NIH Institutes and Centers (ICs). The NIH ICs collectively issue approximately 1000 new CoCs each year for eligible research projects. However, the process for submitting a CoC request is not consistent across the ICs which creates confusion for applicants. To make the application process consistent across the entire agency, OER is proposing to use an electronic application system that will be accessed by research organizations that wish to request a CoC from any NIH IC. Having one system for all CoC applications to NIH will be efficient for both applicants and NIH staff who process these requests. As is currently done, NIH will use the information in the application to determine eligibility for a CoC and to issue the CoC to the requesting organization.

OMB approval is requested for 3 years. There are no costs to respondents other than their time. The total estimated annualized burden hours are 1,500.

ESTIMATED ANNUALIZED BURDEN HOURS

Type of respondents	Number of respondents	Frequency of response	Average time per response	Annual hour burden
CoC Applicants-Private	400	1	90/60	600
CoC Applicants-State/local	450	1	90/60	675
CoC Applicants-Small business	50	1	90/60	75
CoC Applicants-Federal	100	1	90/60	150

Dated: November 13, 2013.

Seleda Perryman,

Chief, Project Clearance Officer, Office of Policy for Extramural Research Administration, National Institutes of Health.

[FR Doc. 2013–27966 Filed 11–20–13; 8:45 am]

BILLING CODE 4140–01–P

DEPARTMENT OF HEALTH AND HUMAN SERVICES

National Institutes of Health

Eunice Kennedy Shriver National Institute of Child Health and Human Development; Notice of Meeting

Pursuant to section 10(a) of the Federal Advisory Committee Act, as amended (5 U.S.C. App.), notice is hereby given of a meeting of the National Advisory Board on Medical Rehabilitation Research.

The meeting will be open to the public, with attendance limited to space available. Individuals who plan to attend and need special assistance, such as sign language interpretation or other reasonable accommodations, should notify the Contact Person listed below in advance of the meeting.

Name of Committee: National Advisory Board on Medical Rehabilitation Research.

Date: December 2–3, 2013.

Time: December 2, 2013, 8:30 a.m. to 5:00 p.m.

Agenda: NICHD Director's Report; NCMRR Director's Report; Discussion of the new model for NCMRR support of rehabilitation research; Coordinating Rehabilitation Research activities across NIH; Defining research opportunities and needs; Renewing research infrastructure network program.

Place: Hyatt Regency Bethesda, One Bethesda Metro Center, 7400 Wisconsin Avenue, Bethesda, MD 20814.

Time: December 3, 2013, 8:30 a.m. to 12:00 p.m.

Agenda: Other business of the NABMRR.

Place: Hyatt Regency Bethesda, One Bethesda Metro Center, 7400 Wisconsin Avenue, Bethesda, MD 20814.

Contact Person: Ralph M. Nitkin, Ph.D., Acting Director, National Center for Medical Rehabilitation Research (NCMRR), Director, Biological Sciences and Career Development, NCMRR, Eunice Kennedy Shriver National Institute, of Child Health and Human Development, NIH, DHHS, 6100 Executive Boulevard, Room 2A03, Bethesda, MD 20892–7510, (301) 402–4206, *rn21e@nih.gov.*

Information is also available on the Institute's/Center's home page: *http://www.nichd.nih.gov/about/advisory/nabmrr/Pages/index.aspx* where an agenda and any additional information for the meeting will be posted when available.

(Catalogue of Federal Domestic Assistance Program Nos. 93.864, Population Research; 93.865, Research for Mothers and Children; 93.929, Center for Medical Rehabilitation Research; 93.209, Contraception and Infertility Loan Repayment Program, National Institutes of Health, HHS)

Dated: November 15, 2013.

Michelle Trout,

Program Analyst, Office of Federal Advisory Committee Policy.

[FR Doc. 2013–27859 Filed 11–20–13; 8:45 am]

BILLING CODE 4140–01–P

DEPARTMENT OF HEALTH AND HUMAN SERVICES

National Institutes of Health

National Institute on Drug Abuse; Notice of Closed Meetings

Pursuant to section 10(d) of the Federal Advisory Committee Act, as amended (5 U.S.C. App), notice is hereby given of the following meetings.

The meetings will be closed to the public in accordance with the provisions set forth in sections 552b(c)(4) and 552b(c)(6), Title 5 USC, as amended. The grant applications and the discussions could disclose confidential trade secrets or commercial property such as patentable materials, and personal information concerning individuals associated with the grant applications, the disclosure of which would constitute a clearly unwarranted invasion of personal privacy.

Name of Committee: National Institute on Drug Abuse Special Emphasis Panel; Revision Applications to Promote CRAN (R01) Review.

Date: December 16, 2013.

Time: 12:00 p.m. to 3:00 p.m.

Agenda: To review and evaluate grant applications.

Place: National Institutes of Health, Neuroscience Center, 6001 Executive Boulevard, Rockville, MD 20852, (Telephone Conference Call).

Contact Person: Scott A. Chen, Ph.D., Scientific Review Officer, Office of Extramural Affairs, National Institute on Drug Abuse, NIH, DHHS, 6001 Executive Blvd., Room 4234, MSC 9550, Bethesda, MD 20892–9550, 301–443–9511, *chensc@mail.nih.gov.*

Name of Committee: National Institute on Drug Abuse Special Emphasis Panel; Seek, Test, Treat, and Retain Data Harmonization Coordinating Center.

Date: December 17, 2013.

Time: 2:00 p.m. to 5:00 p.m.

Agenda: To review and evaluate grant applications.

Place: National Institutes of Health, Neuroscience Center, 6001 Executive Boulevard, Rockville, MD 20852, (Telephone Conference Call).

Contact Person: Eliane Lazar-Wesley, Ph.D., Scientific Review Officer, Office of Extramural Affairs, National Institute on Drug Abuse, NIH, DHHS, 6001 Executive Blvd., Room 4245, MSC 9550, Bethesda, MD 20892–9550, 301–451–4530, *el6r@nih.gov.*

(Catalogue of Federal Domestic Assistance Program Nos.: 93.279, Drug Abuse and Addiction Research Programs, National Institutes of Health, HHS)

Dated: November 15, 2013.

Michelle Trout,

Program Analyst, Office of Federal Advisory Committee Policy.

[FR Doc. 2013–27856 Filed 11–20–13; 8:45 am]

BILLING CODE 4140–01–P

DEPARTMENT OF HEALTH AND HUMAN SERVICES

National Institutes of Health

National Cancer Institute; Amended Notice of Meeting

Notice is hereby given of a change in the meeting of the National Cancer Institute Director's Consumer Liaison Group, October 17, 2013, 10:00 a.m. to October 17, 2013, 04:30 p.m., National Institutes of Health, Building 31, C-Wing, 31 Center Drive, Room 10, Bethesda, MD, 20892 which was published in the **Federal Register** on September 18, 2013, 78FR57400.

Due to the absence of either an FY 2014 appropriation or Continuing Resolution for the Department of Health and Human Services, the DCLG meeting is rescheduled for December 2, 2013 from 9:30 a.m. to 4:00 p.m. Additionally, the meeting location has changed to the Hyatt Regency Bethesda, 7400 Wisconsin Avenue, Bethesda, MD 20814. The meeting is open to the public and the following agenda topics will be discussed: Proposed organizational change: DEA, Biomedical Cloud Technology, Optimizing Big Data to Advance Research, and Advocate and Organizational Engagement.

Dated: November 15, 2013.

Melanie J. Gray,

Program Analyst, Office of Federal Advisory Committee Policy.

[FR Doc. 2013–27857 Filed 11–20–13; 8:45 am]

BILLING CODE 4140–01–P

DEPARTMENT OF HOMELAND SECURITY

Office of the Secretary

[Docket No. DHS–2013–0077]

Privacy Act of 1974; Department of Homeland Security/Federal Emergency Management Agency—001 National Emergency Family Registry and Locator System (NEFRLS) System of Records

AGENCY: Department of Homeland Security, Privacy Office.

ACTION: Notice of Privacy Act System of Records.

SUMMARY: In accordance with the Privacy Act of 1974, the Department of Homeland Security proposes to update and reissue a current Department of Homeland Security system of records titled, ''Department of Homeland Security/Federal Emergency Management Agency—001 National Emergency Family Registry and Locator System of Records.'' This system of records allows the Department of Homeland Security/Federal Emergency Management Agency to collect and maintain records on adults displaced from their homes or pre-disaster locations after a Presidentially-declared emergency or disaster. As a result of a biennial review of this system, this system of records notice has been updated as follows: (1) The security classification has changed to reflect that the system is sensitive but unclassified; and (2) the language in routine uses ''A,'' ''C,'' and ''E'' has been revised for clarity. Additionally, this notice includes non-substantive changes to simplify the formatting and text of the previously published notice. This updated system will be included in the Department of Homeland Security's inventory of record systems.

DATES: Submit comments on or before December 23, 2013. This updated

system will be effective December 23, 2013.

ADDRESSES: You may submit comments, identified by docket number DHS–2013 0077 by one of the following methods:

- *Federal e-Rulemaking Portal: http://www.regulations.gov*. Follow the instructions for submitting comments.
- *Fax:* (202) 343–4010.
- *Mail:* Karen L. Neuman, Chief Privacy Officer, Privacy Office, Department of Homeland Security, Washington, DC 20528.

Instructions: All submissions received must include the agency name and docket number for this rulemaking. All comments received will be posted without change to *http://www.regulations.gov,* including any personal information provided.

Docket: For access to the docket to read background documents or comments received go to *http://www.regulations.gov*.

FOR FURTHER INFORMATION CONTACT: For general questions please contact: Eric M. Leckey, (202) 212–5100, Privacy Officer, Federal Emergency Management Agency, 500 C Street SW., Washington, DC 20475. For privacy issues please contact: Karen L. Neuman, (202) 343–1717, Acting Chief Privacy Officer, Privacy Office, Department of Homeland Security, Washington, DC 20528.

SUPPLEMENTARY INFORMATION:

I. Background

In accordance with the Privacy Act of 1974, 5 U.S.C. 552a, the Department of Homeland Security (DHS) Federal Emergency Management Agency (FEMA) proposes to update and reissue a current DHS/FEMA system of records titled, ''DHS/FEMA—001 National Emergency Family Registry and Locator System (NEFRLS) System of Records.''

During Hurricane Katrina, displaced individuals experienced numerous difficulties in reuniting with family members after the disaster. As a result, Congress mandated in Section 689c of the Post-Katrina Emergency Management Reform Act (PKEMRA) of 2006, Pub. Law 109–295, that FEMA establish NEFRLS. FEMA has the discretionary authority to activate NEFRLS to help reunify families separated after an emergency or disaster declared by the President as defined in the Robert T. Stafford Disaster Relief and Emergency Assistance Act, 42 U.S.C. 5121–5207. Though the primary function of the NFERLS is to reunify families, anyone who may have trouble locating a family member during a disaster is welcome to register. NEFRLS is a nationally accessible and web-based system that allows adults, including medical patients, who have been displaced by a disaster or emergency to voluntarily enter personal information into a database to assist with the reunification process. Registrants can select who can view their personal information.

The DHS/FEMA NEFRLS System of Records also collects information from law enforcement officials (LEO) who use the system when responding to a missing persons report. The information FEMA collects from LEOs facilitates identity verification and their status as a member of law enforcement.

As a result of the biennial review, DHS/FEMA is updating records within the classification category to be sensitive but unclassified, rather than unclassified. While the system of records still remains unclassified, the update accurately reflects the sensitivity of the records as it involves the location data of displaced individuals.

This updated notice clarifies three routine uses. This notice updates routine use ''A'' to apply when DHS employees or former employees are involved in litigation; routine use ''C'' to include disclosure to the General Services Administration; and routine use ''E'' to clarify the language.

The DHS/FEMA—001 NEFRLS System of Records allows limited access to three groups of individuals. The groups are: (1) Registrants: Displaced adults or children registered in the system; (2) searchers: Individuals who are searching for family or household members who registered in the system; and (3) FEMA NEFRLS Administrators: FEMA personnel who have limited access to records for the purpose of sharing registrants' information with LEOs pursuant to an official missing persons report.

This updated system will be included in DHS's inventory of record systems.

II. Privacy Act

The Privacy Act embodies fair information practice principles in a statutory framework governing the means by which federal government agencies collect, maintain, use, and disseminate individuals' records. The Privacy Act applies to information that is maintained in a ''system of records.'' A ''system of records'' is a group of any records under the control of an agency from which information is retrieved by the name of an individual or by some identifying number, symbol, or other identifying particular assigned to the individual. In the Privacy Act, an individual is defined to encompass U.S. citizens and lawful permanent residents. As a matter of policy, DHS extends administrative Privacy Act protections to all individuals when systems of records maintain information on U.S. citizens, lawful permanent residents, and visitors.

In accordance with 5 U.S.C. 552a(r), DHS has provided a report of this system of records to the Office of Management and Budget and to Congress.

System of Records

Department of Homeland Security (DHS)/Federal Emergency Management Agency (FEMA)—001.

SYSTEM NAME:

DHS/FEMA—001 National Emergency Family Registry and Locator System (NEFRLS) System of Records.

SECURITY CLASSIFICATION:

Sensitive but unclassified.

SYSTEM LOCATION:

Records are maintained at FEMA Headquarters in Washington, DC and field offices.

CATEGORIES OF INDIVIDUALS COVERED BY THE SYSTEM:

Categories of individuals covered by the system include: registrants (adult individual(s)) who have been displaced by a Presidentially-declared disaster or emergency and who voluntarily register in NEFRLS; family or household members who are traveling with the registrant or who lived in the pre-disaster residence immediately preceding the disaster; searchers who are searching for missing family or household members; and federal, state, local, tribal, territorial, international, or foreign law enforcement officials (LEO) that are searching for missing persons that may have been displaced by a Presidentially-declared disaster or emergency pursuant to an official missing persons report.

CATEGORIES OF RECORDS IN THE SYSTEM:

Information about registrant consists of:

- Authenticated Individual's Full Name;
- Date of Birth;
- Gender;
- Current Phone;
- Alternate Phone;
- Current Address;
- Pre-Disaster Address;
- Name and Type of Current Location; (i.e. shelter, hotel, or family/friend's home);
- Traveling with Pets (Yes or No);
- Identity Authentication Approval or Nonapproval (DHS/FEMA maintains the fact of the authentication, but the answers to the questions provided to the

third party organization are not maintained by DHS/FEMA);

- System-Specific Username and Password; and
- Personal Message (may consist of up to 300 characters intended for designated family or household members to read).

Information about the family/household members traveling with the registrant in NEFRLS consists of:

- Family/Household Members' Full Name;
- Gender;
- Current Phone;
- Alternate Phone;
- Current Address;
- Pre-Disaster address;
- Name and type of current location; (i.e., shelter, hotel, or family/friend's home);
- Traveling with Pets (Yes or No);
- Personal Message: (may consist of up to 300 characters for listed, designated family, or household members to read.)

Information about the individual searching NEFRLS for a registrant or family/household member (searcher) consists of:

- Searching Individual's Full Name;
- Permanent Address;
- Phone;
- Alternate Phone;
- Email;
- Date of Birth;
- Identity Authentication Approval or Nonapproval (DHS/FEMA maintains the fact of the authentication, but the answers to the questions provided to the third party organization are not maintained by DHS/FEMA); and
- System-Specific Username and Password.

Information about a LEO collected by a FEMA NEFRLS Administrator for verification and status:

- Law Enforcement Official's Title;
- First Name;
- Last Name;
- Gender;
- Badge number/Law Enforcement License ID Number;
- Agency Name;
- City;
- County/Parish;
- State;
- Zip Code;
- Contact Phone;
- Contact Email;
- Supervisor Name;
- Supervisor Contact Number;
- Supervisor Contact Email;
- Agency City;
- Agency County/Parish;
- Agency State; and
- Verification Data.

AUTHORITY FOR MAINTENANCE OF THE SYSTEM:

Section 689c of the Post-Katrina Emergency Management Reform Act of 2006 (6 U.S.C. 775); and the Robert T. Stafford Disaster Relief and Emergency Assistance Act, as amended, 42 U.S.C. 5121–5207.

PURPOSE(S):

The purpose of this system is to reunify families and household members following a Presidentially-declared disaster or emergency. Families using NEFRLS, registrants, and searchers must acknowledge that information in NEFRLS may be disclosed to searchers upon request. Information may also be disclosed to federal, state, local, tribal, territorial, international, or foreign agencies, LEO, and voluntary agencies.

ROUTINE USES OF RECORDS MAINTAINED IN THE SYSTEM, INCLUDING CATEGORIES OF USERS AND THE PURPOSES OF SUCH USES:

In addition to those disclosures generally permitted under 5 U.S.C. 552a(b) of the Privacy Act, all or a portion of the records or information contained in this system may be disclosed outside DHS as a routine use pursuant to 5 U.S.C. 552a(b)(3) as follows:

A. To the Department of Justice (DOJ), including U.S. Attorney Offices, or other federal agency conducting litigation or in proceedings before any court, adjudicative, or administrative body, when it is relevant or necessary to the litigation and one of the following is a party to the litigation or has an interest in such litigation:

1. DHS or any component thereof;
2. Any employee or former employee of DHS in his/her official capacity;
3. Any employee or former employee of DHS in his/her individual capacity when DOJ or DHS has agreed to represent the employee; or
4. The United States or any agency thereof.

B. To a congressional office from the record of an individual in response to an inquiry from that congressional office made at the request of the individual to whom the record pertains.

C. To the National Archives and Records Administration (NARA) or General Services Administration pursuant to records management inspections being conducted under the authority of 44 U.S.C. 2904 and 2906.

D. To an agency or organization for the purpose of performing audit or oversight operations as authorized by law, but only such information as is necessary and relevant to such audit or oversight function.

E. To appropriate agencies, entities, and persons when:

1. DHS suspects or has confirmed that the security or confidentiality of information in the system of records has been compromised;
2. DHS has determined that as a result of the suspected or confirmed compromise, there is a risk of identity theft or fraud, harm to economic or property interests, harm to an individual, or harm to the security or integrity of this system or other systems or programs (whether maintained by DHS or another agency or entity) that rely upon the compromised information; and
3. The disclosure made to such agencies, entities, and persons is reasonably necessary to assist in connection with DHS's efforts to respond to the suspected or confirmed compromise and prevent, minimize, or remedy such harm.

F. To contractors and their agents, grantees, experts, consultants, and others performing or working on a contract, service, grant, cooperative agreement, or other assignment for DHS, when necessary to accomplish an agency function related to this system of records. Individuals provided information under this routine use are subject to the same Privacy Act requirements and limitations on disclosure as are applicable to DHS officers and employees.

G. To an appropriate federal, state, local, tribal, territorial, international, or foreign law enforcement agency or other appropriate authority charged with investigating or prosecuting a violation or enforcing or implementing a law, rule, regulation, or order, when a record, either on its face or in conjunction with other information, indicates a violation or potential violation of law, which includes criminal, civil, or regulatory violations and such disclosure is proper and consistent with the official duties of the person making the disclosure.

H. To appropriate authorized federal, state, local, tribal, territorial, international, or foreign law enforcement officers charged with investigating the whereabouts or locating missing persons.

I. To the National Center for Missing and Exploited Children and voluntary organizations as defined in 44 CFR 206.2(a)(27) that have an established disaster assistance program to address the disaster-related unmet needs of disaster victims, are actively involved in the recovery efforts of the disaster, and either have a national membership, in good standing, with the National Voluntary Organizations Active in Disaster, or are participating in the disaster's Long-Term Recovery Committee for the express purpose of reunifying families.

J. To federal, state, local, tribal, territorial, international, or foreign agencies that coordinate with FEMA under the National Response Framework (an integrated plan explaining how the federal government will interact with and support state, local, tribal, territorial, and non-governmental entities during a Presidentially-declared disaster or emergency) for the purpose of assisting with the investigation on the whereabouts of or locating missing persons.

DISCLOSURE TO CONSUMER REPORTING AGENCIES:

None.

POLICIES AND PRACTICES FOR STORING, RETRIEVING, ACCESSING, RETAINING, AND DISPOSING OF RECORDS IN THE SYSTEM:

STORAGE:

Records in this system are stored electronically or on paper in secure facilities in a locked drawer behind a locked door. The records are stored on magnetic disc, tape, and digital media.

RETRIEVABILITY:

Records may be retrieved by name, address, and phone number of the individual registering or searching in the National Emergency Family Registry and Locator System.

SAFEGUARDS:

Records in this system are safeguarded in accordance with applicable rules and policies, including all applicable DHS automated systems security and access policies. Strict controls have been imposed to minimize the risk of compromising the information that is being stored. Access to the computer system containing the records in this system is limited to those individuals who have a need to know the information for the performance of their official duties and who have appropriate clearances or permissions.

RETENTION AND DISPOSAL:

In accordance with the FEMA Records Schedule (FRS) and NARA Disposition Authority number N1–311–09–1, records and reports related to and regarding registrations and searchers in NEFRLS performed by a displaced person, Call Center Operator on behalf of a displaced person, or family and friends will be cut off 60 days after the last edit to the record and destroyed/deleted three years after the cutoff. Additionally, in compliance with FRS and NARA Disposition Authority number N1–311–04–5, Item 3, records in this system associated with a domestic catastrophic event will have permanent value. A catastrophic event may be any natural or manmade incident, including terrorism, which results in extraordinary levels of mass casualties, damage, or disruption severely affecting the population, infrastructure, environment, economy, national morale, and/or government functions. A catastrophic event could result in sustained national impacts over a prolonged period of time; almost immediately exceeds resources normally available to state, local, tribal, territorial and private-sector authorities in the impacted area; and significantly interrupts governmental operations and emergency services to such an extent that national security could be threatened.

SYSTEM MANAGER AND ADDRESS:

Deputy Director, Individual Assistance, Disaster Assistance Directorate, Federal Emergency Management Agency, 500 C Street SW., Washington, DC 20472.

NOTIFICATION PROCEDURE:

Individuals seeking notification of and access to any record contained in this system of records, or seeking to contest its content, may submit a request in writing to FEMA's FOIA Officer whose contact information can be found at *http://www.dhs.gov/foia* under ''Contacts.'' If an individual believes more than one component maintains Privacy Act records concerning him or her, the individual may submit the request to the Chief Privacy Officer and Chief Freedom of Information Act Officer, Department of Homeland Security, 245 Murray Drive SW., Building 410, STOP–0655, Washington, DC 20528.

When seeking records about yourself from this system of records or any other Departmental system of records your request must conform with the Privacy Act regulations set forth in 6 CFR Part 5. You must first verify your identity, meaning that you must provide your full name, current address and date and place of birth. You must sign your request, and your signature must either be notarized or submitted under 28 U.S.C. 1746, a law that permits statements to be made under penalty of perjury as a substitute for notarization. While no specific form is required, you may obtain forms for this purpose from the Chief Privacy Officer and Chief Freedom of Information Act Officer, *http://www.dhs.gov* or 1–866–431–0486. In addition you should:

- Explain of why you believe the Department would have information on you;
- Identify which component(s) of the Department you believe may have the information about you; and
- Specify when you believe the records were created.

Provide any other information that will help the FOIA staff determine which DHS component agency may have responsive records. If your request is seeking records pertaining to another living individual, you must include a statement from that individual certifying his/her agreement for you to access his/her records.

Without this bulleted information the component(s) may not be able to conduct an effective search, and your request may be denied due to lack of specificity or lack of compliance with applicable regulations.

RECORD ACCESS PROCEDURES:

See ''Notification procedure'' above.

CONTESTING RECORD PROCEDURES:

See ''Notification procedure'' above.

RECORD SOURCE CATEGORIES:

Records are obtained from registrants of NEFRLS and individuals searching the NEFRLS, LEOs, and the third party authentication service indicating an individual has been approved or not approved.

EXEMPTIONS CLAIMED FOR THE SYSTEM:

None.

Dated: November 6, 2013.

Karen L. Neuman,

Chief Privacy Officer, Department of Homeland Security.

[FR Doc. 2013–27897 Filed 11–20–13; 8:45 am]

BILLING CODE 9110–17–P

DEPARTMENT OF HOMELAND SECURITY

Office of the Secretary

[DHS–2013–0073]

Privacy Act of 1974; Department of Homeland Security, Federal Emergency Management Agency, Federal Government—001 National Defense Executive Reserve System of Records

AGENCY: Department of Homeland Security, Privacy Office.

ACTION: Notice of Privacy Act System of Records.

SUMMARY: In accordance with the Privacy Act of 1974, the Department of Homeland Security proposes to update and reissue a current Department of Homeland Security system of records titled, ''Department of Homeland

Security/Federal Emergency Management Agency/Federal Government—001 National Defense Executive Reserve System of Records.'' This system allows the Department of Homeland Security/Federal Emergency Management Agency to collect and maintain records pertaining to applicants for and members of the National Defense Executive Reserve. As a result of the biennial review of this system, this system of records notice has been updated within the (1) categories of records to include the collection of employer and/or supervisor name and title; and (2) routine uses ''A,'' ''C,'' and ''E'', which have been revised for clarity. Additionally, this notice includes other non-substantive changes to simplify the formatting and text of the previously published notice. This updated system will be included in the Department of Homeland Security's inventory of record systems.

DATES: Submit comments on or before December 23, 2013. This updated system will be effective December 23, 2013.

ADDRESSES: You may submit comments, identified by docket number DHS–2013–0073 by one of the following methods:

- *Federal e-Rulemaking Portal: http://www.regulations.gov*. Follow the instructions for submitting comments.
- *Fax:* (202) 343–4010.
- *Mail:* Karen L. Neuman, Chief Privacy Officer, Privacy Office, Department of Homeland Security, Washington, DC 20528.

Instructions: All submissions received must include the agency name and docket number for this rulemaking. All comments received will be posted without change and may be read at *http://www.regulations.gov,* including any personal information provided.

Docket: For access to the docket to read background documents or comments received, please visit *http://www.regulations.gov.*

FOR FURTHER INFORMATION CONTACT: For general questions, please contact: Eric Leckey, (202) 212–5100, Privacy Officer, Federal Emergency Management Agency, Department of Homeland Security, Washington, DC 20478. For privacy issues, please contact: Karen L. Neuman, (202) 343–1717, Chief Privacy Officer, Privacy Office, Department of Homeland Security, Washington, DC 20528.

SUPPLEMENTARY INFORMATION:

I. Background

In accordance with the Privacy Act of 1974, 5 U.S.C. 552a, the Department of Homeland Security (DHS) Federal Emergency Management Agency (FEMA) proposes to update and reissue a current DHS system of records titled, ''DHS/FEMA/GOVT—001 National Defense Executive Reserve System of Records.''

The National Defense Executive Reserve program is a government-wide program administered by DHS/FEMA that recruits and trains individuals to serve the government in key executive positions during national emergencies. Individuals in the National Defense Executive Reserve voluntarily apply for assignments. Some individuals are federal government employees, and others are private sector or state government employees who would not be considered federal government employees unless asked to perform emergency duties after the President of the United States declares a mobilization. Assignments are made in three year increments and may either be redesignated or terminated. Individuals may voluntarily terminate at any time. This system of records allows DHS/FEMA to collect and maintain records regarding applicants for and members of the National Defense Executive Reserve. The collection and maintenance of this information assists DHS/FEMA in coordinating and administering the National Defense Executive Reserve.

The update reflects the addition of employer and/or supervisor name and title as a category of records. Limited employer or supervisor information is included on National Defense Executive Reserve applications to supplement applicant information and provide information on the applicant's employment history.

This updated notice clarifies three routine uses. The notice updates routine use ''A'' to apply when DHS employees or former employees are involved in litigation; routine Use ''C'' to include disclosure to the General Services Administration; and routine use ''E'' to clarify the language.

Consistent with DHS's information-sharing mission, information stored in the DHS/FEMA/GOVT—001 National Defense Executive Reserve System of Records may be shared with other DHS components that have a need to know the information to carry out their national security, law enforcement, immigration, intelligence, or other homeland security functions. In addition, information may be shared with appropriate federal, state, local, tribal, territorial, foreign, or international government agencies consistent with the routine uses set forth in this system of records notice.

This updated system will be included in DHS's inventory of record systems.

II. Privacy Act

The Privacy Act embodies fair information principles in a statutory framework governing the means by which federal government agencies collect, maintain, use, and disseminate individuals' records. The Privacy Act applies to information that is maintained in a ''system of records.'' A ''system of records'' is a group of any records under the control of an agency from which information is retrieved by the name of an individual or by some identifying number, symbol, or other identifying particular assigned to the individual. In the Privacy Act, an individual is defined to encompass U.S. citizens and lawful permanent residents. As a matter of policy, DHS extends administrative Privacy Act protections to all individuals when systems of records maintain information on U.S. citizens, lawful permanent residents, and visitors.

Below is the description of the DHS/FEMA/GOVT—001 National Defense Executive Reserve System of Records.

In accordance with 5 U.S.C. 552a(r), DHS has provided a report of this updated system of records to the Office of Management and Budget and to Congress.

System of Records

Department of Homeland Security (DHS)/Federal Emergency Management Agency (FEMA)/Federal Government (GOVT)—001.

SYSTEM NAME:

DHS/FEMA/GOVT—001 National Defense Executive Reserve System.

SECURITY CLASSIFICATION:

Unclassified.

SYSTEM LOCATION:

Records are maintained at the FEMA Headquarters in Washington, DC, field offices, or other designated offices located at the local installation of the department or agency that currently employs the individual.

CATEGORIES OF INDIVIDUALS COVERED BY THE SYSTEM:

Categories of individuals include applicants for and members of the National Defense Executive Reserve assignments, and the applicants' supervisors.

CATEGORIES OF RECORDS IN THE SYSTEM:

Categories of records in this system include:

- Individual's name;
- Social Security number;
- Home mailing address;
- Home telephone number;

- Home email address;
- Date of birth;
- Birthplace;
- Employment experience;
- Employer/supervisor name and title;
- Professional memberships; and
- Other personnel and administrative records, skills inventory, training data, and other related records necessary to coordinate and administer the program.

AUTHORITY FOR MAINTENANCE OF THE SYSTEM:

Defense Production Act of 1950, Exec. Order 11179, September 22, 1964, as amended by Exec. Order 12148, July 20, 1979; and Exec. Order 9397, November 22, 1943, as amended by Exec. Order 13478, November 18th, 2008.

PURPOSE(S):

The purpose of this system is to collect and preserve records regarding applicants for and members of the National Defense Executive Reserve. The collection and maintenance of this information assists the federal government and DHS/FEMA in coordinating and administering the National Defense Executive Reserve.

ROUTINE USES OF RECORDS MAINTAINED IN THE SYSTEM, INCLUDING CATEGORIES OF USERS AND THE PURPOSES OF SUCH USES:

In addition to those disclosures generally permitted under 5 U.S.C. 552a(b) of the Privacy Act, all or a portion of the records of information contained in this system may be disclosed outside DHS as a routine use pursuant to 5 U.S.C. 552a(b)(3) as follows:

A. To the Department of Justice (DOJ), including U.S. Attorney Offices, or other federal agency conducting litigation or in proceedings before any court, adjudicative, or administrative body, when it is relevant or necessary to the litigation and one of the following is a party to the litigation or has an interest in such litigation:

1. DHS or any component thereof;

2. Any employee or former employee of DHS in his/her official capacity;

3. Any employee or former employee of DHS in his/her individual capacity when DOJ or DHS has agreed to represent the employee; or

4. The United States or any agency thereof.

B. To a congressional office from the record of an individual in response to an inquiry from that congressional office made at the request of the individual about whom the record pertains.

C. To the National Archives and Records Administration (NARA) or General Services Administration pursuant to records management inspections being conducted under the authority of 44 U.S.C. §§ 2904 and 2906.

D. To an agency or organization for the purpose of performing audit or oversight operations as authorized by law, but only such information as is necessary and relevant to such audit or oversight function.

E. To appropriate agencies, entities, and persons when:

1. DHS suspects or has confirmed that the security or confidentiality of information in the system of records has been compromised;

2. DHS has determined that as a result of the suspected or confirmed compromise, there is a risk of identity theft or fraud, harm to economic or property interests, harm to an individual, or harm to the security or integrity of this system or other systems or programs (whether maintained by DHS or another agency or entity) that rely upon the compromised information; and

3. The disclosure made to such agencies, entities, and persons is reasonably necessary to assist in connection with DHS's efforts to respond to the suspected or confirmed compromise and prevent, minimize, or remedy such harm.

F. To contractors and their agents, grantees, experts, consultants, and others performing or working on a contract, service, grant, cooperative agreement, or other assignment for DHS, when necessary to accomplish an agency function related to this system of records. Individuals provided information under this routine use are subject to the same Privacy Act requirements and limitations on disclosure as are applicable to DHS officers and employees.

G. To an appropriate federal, state, tribal, local, international, or foreign law enforcement agency or other appropriate authority charged with investigating or prosecuting a violation or enforcing or implementing a law, rule, regulation, or order, when a record, either on its face or in conjunction with other information, indicates a violation or potential violation of law, which includes criminal, civil, or regulatory violations and such disclosure is proper and consistent with the official duties of the person making the disclosure.

H. To the Association of the National Defense Executive Reserve and the National Defense Executive Reserve Conference Association to facilitate training and relevant information dissemination efforts for reservists in the National Defense Executive Reserve.

I. To an appropriate federal, state, local, tribal, foreign, or international agency, if the information is relevant and necessary to a requesting agency's decision concerning the hiring or retention of an individual, or issuance of a security clearance, license, contract, grant, or other benefit.

J. To an appropriate federal, state, local, tribal, foreign, or international agency, if the information is relevant and necessary to a DHS decision concerning the hiring or retention of a National Defense Executive Reserve applicant or executive.

K. To a court, magistrate, or administrative tribunal in the course of presenting evidence, including disclosure to opposing counsel or witnesses in the course of civil discovery, litigation, or settlement negotiations or in connection with criminal law proceedings or in response to a subpoena from a court of competent jurisdiction.

L. To the news media and the public, with the approval of the Chief Privacy Office in consultation with counsel, when there exists a legitimate public interest in the disclosure of the information or when disclosure is necessary to preserve confidence in the integrity of DHS or is necessary to demonstrate the accountability of DHS's officers, employees, or individuals covered by the system, except to the extent it is determined that release of the specific information in the context of a particular case would constitute an unwarranted invasion of personal privacy.

DISCLOSURE TO CONSUMER REPORTING AGENCIES:

None.

POLICIES AND PRACTICES FOR STORING, RETRIEVING, ACCESSING, RETAINING, AND DISPOSING OF RECORDS IN THE SYSTEM:

STORAGE:

Records in this system are stored electronically or on paper in secure facilities in a locked drawer behind a locked door. The records are stored on magnetic disc, tape, or digital media.

RETRIEVABILITY:

Records may be retrieved by individual's name, Social Security number, specific skill area of the applicant, or agency.

SAFEGUARDS:

DHS/FEMA safeguards records in this system according to applicable rules and policies, including all applicable DHS automated systems security and access policies. Strict controls have been imposed to minimize the risk of compromising the information that is being stored. Access to the computer system containing the records in this

system is limited to those individuals who have a need to know the information for the performance of their official duties and who have appropriate clearances or permissions.

RETENTION AND DISPOSAL:

Case files on reservists are maintained in accordance with Item 29a, GRS 18, Security and Protective Services Records, and destroyed five years after termination from the National Defense Executive Reserve (NDER) program. Case files on individuals whose applications were rejected or withdrawn are destroyed when five years old in accordance with Item 29b, GRS 18.

SYSTEM MANAGER AND ADDRESS:

Associate Director, National Preparedness Directorate, Federal Emergency Management Agency, Washington, DC 20472, will maintain a computerized record of all applications and assignments of National Defense Executive Reserve reservists for the Federal Government as well as the personnel files for all individuals assigned to the Federal Emergency Management Agency. The departments and agencies will maintain their own personnel records on those individuals assigned to their respective department or agency.

NOTIFICATION PROCEDURE:

Individuals wishing to inquire whether this system of records contains information about themselves should submit their inquiries to:

(a) NDER applicants/assignees to DHS/FEMA—Federal Emergency Management Agency, Associate Director, National Preparedness Directorate, Washington, DC 20472; or

(b) FEMA FOIA Office whose contact information can be found at *http://www.dhs.gov/foia* under ''Contacts.''

If a NDER applicant believes more than one component maintains Privacy Act records concerning him or her, the individual may submit the request to the Chief Privacy Officer and Chief Freedom of Information Act Officer, Department of Homeland Security, 245 Murray Drive SW., Building 410, STOP–0655, Washington, DC 20528.

When seeking records about yourself from this system of records or any other Departmental system of records, your request must conform with the Privacy Act regulations set forth in 6 CFR Part 5. You must first verify your identity, meaning that you must provide your full name, current address, and date and place of birth. You must sign your request, and your signature must either be notarized or submitted under 28 U.S.C. § 1746, a law that permits statements to be made under penalty of perjury as a substitute for notarization. While no specific form is required, you may obtain forms for this purpose from the Chief Privacy Officer and Chief Freedom of Information Act Officer, *http://www.dhs.gov/foia* or 1–866–431–0486. In addition, you should:

- Explain why you believe the Department would have information on you;
- Identify which component(s) of the Department you believe may have the information about you; and
- Specify when you believe the records would have been created.

Provide any other information that will help the FOIA staff determine which DHS component agency may have responsive records. If your request is seeking records pertaining to another living individual, you must include a statement from that individual certifying his/her agreement for you to access his/her records.

Without the above information, the component(s) may not be able to conduct an effective search and your request may be denied due to lack of specificity or lack of compliance with applicable regulations.

RECORD ACCESS PROCEDURES:

See ''Notification procedure'' above.

CONTESTING RECORD PROCEDURES:

See ''Notification procedure'' above.

RECORD SOURCE CATEGORIES:

Records are obtained from the individuals to whom the record pertains. Prior to being designated as an National Defense Executive Reserve reservist, the applicant must successfully complete a background investigation conducted by the Office of Personnel Management, which may include reference checks of prior employers, educational institutions attended, police records, neighborhoods, and present and past friends and acquaintances.

EXEMPTIONS CLAIMED FOR THE SYSTEM:

None.

Dated: November 6, 2013.

Karen L. Neuman,

Chief Privacy Officer, Department of Homeland Security.

[FR Doc. 2013–27894 Filed 11–20–13; 8:45 am]

BILLING CODE 4410–10–P

DEPARTMENT OF HOMELAND SECURITY

Office of the Secretary

[Docket No. DHS–2013–0069]

Privacy Act of 1974; Department of Homeland Security U.S. Citizenship and Immigration Services, U.S. Immigration and Customs Enforcement, U.S. Customs and Border Protection—001 Alien File, Index, and National File Tracking System of Records

AGENCY: Department of Homeland Security, Privacy Office.

ACTION: Notice of update and reissuance of privacy act system of records.

SUMMARY: In accordance with the Privacy Act of 1974, the Department of Homeland Security proposes to update and reissue a current Department of Homeland Security system of records notice titled, ''Department of Homeland Security U.S. Citizenship and Immigration Services, U.S. Immigration and Customs Enforcement, U.S. Customs and Border Protection—001 Alien File, Index, and National File Tracking System of Records,'' 76 FR 34233 (June 13, 2011). This system of records contains information regarding transactions involving an individual as he/she passes through the U.S. immigration and inspection process, some of which may also be covered by separate systems of records notices. This system of records contains personally identifiable information such as the individual's name, Alien Registration Number, receipt file number, date and place of birth, date and port of entry, as well as the location of each official Alien File. It may also contain other personal identifiers such as an individual's Social Security Number. The Department of Homeland Security is updating the Department of Homeland Security U.S. Citizenship and Immigration Services, U.S. Immigration and Customs Enforcement, U.S. Customs and Border Protection—001 Alien File, Index, and National File Tracking System of Records with the following substantive changes: (1) The addition of five routine uses and the modification of eight routine uses to allow the Department of Homeland Security to share information from this system; (2) Updated notification and access procedures; and (3) Language acknowledging the concurrent publication of a Final Rule exempting this system from certain provisions of the Privacy Act, including an exemption for records that are classified. This updated system will be included in the

Department of Homeland Security's inventory of record systems.

DATES: Submit comments on or before December 23, 2013. This updated system will be effective December 23, 2013.

ADDRESSES: You may submit comments, identified by docket number DHS–2013–0069 by one of the following methods:

- *Federal e-Rulemaking Portal: http://www.regulations.gov*. Follow the instructions for submitting comments.
- *Fax:* 202–343–4010.
- *Mail:* Jonathan R. Cantor, Deputy Chief Privacy Officer, Privacy Office, Department of Homeland Security, Washington, DC 20528.

Instructions: All submissions received must include the agency name and docket number for this rulemaking. All comments received will be posted without change to *http://www.regulations.gov,* including any personal information provided.

Docket: For access to the docket to read background documents or comments received, please visit *http://www.regulations.gov*.

FOR FURTHER INFORMATION CONTACT: For general questions regarding this system of records please contact: Donald K. Hawkins (202) 272–8000, Privacy Officer, U.S. Citizenship and Immigration Services, 20 Massachusetts Avenue NW., Washington, DC 20529. For privacy questions please contact: Jonathan R. Cantor (202) 343–1717, Deputy Chief Privacy Officer, Privacy Office, Department of Homeland Security, Washington, DC 20528.

SUPPLEMENTARY INFORMATION:

I. Background

In accordance with the Privacy Act of 1974, 5 U.S.C. 552a, the Department of Homeland Security (DHS) U.S. Citizenship and Immigration Services (USCIS), U.S. Immigration and Customs Enforcement (ICE), U.S. Customs and Border Protection (CBP) proposes to update and reissue a current DHS system of records titled, ''DHS/USCIS–ICE–CBP–001 Alien File, Index, and National File Tracking System of Records.''

DHS implements U.S. immigration law and policy through USCIS's processing and adjudication of applications and petitions submitted for citizenship, asylum, and other immigration benefits. USCIS also supports national security by preventing individuals from fraudulently obtaining immigration benefits and by denying applications from individuals who pose national security or public safety threats. U.S. immigration policy and law is also implemented through ICE's law enforcement activities and CBP's inspection and border security processes.

The Alien File (A-File), Index, and National File Tracking System of Records is the official record system that contains information regarding the transactions of an individual as he/she passes through the U.S. immigration and inspection process. The DHS/USCIS–ICE–CBP–001 Alien File, Index, and National File Tracking System of Records contains personally identifiable information (PII) such as the individual's name, Alien Registration Number, receipt file number, date and place of birth, date and port of entry, as well as the location of each official A-File. It may also contain other personal identifiers such as an individual's Social Security Number (SSN), if the individual has one and it is in the A-File. Some records contained in the DHS/USCIS–ICE–CBP–001 A-Files are derived from separate systems of record, in which case the system of records notice (SORN) pertaining to the originating system would govern the treatment of those records. Previously, the legacy agency Immigration and Naturalization Services (INS) collected and maintained information concerning all of these immigration and inspection interactions. Since the formation of DHS, however, immigration responsibilities have been divided among USCIS, ICE, and CBP. While USCIS is the custodian of the A-File, all three components create, contribute information to, and use A-Files, hence this joint System of Records Notice.

A notice detailing this system of records was last published in the **Federal Register** on June 13, 2011, as the DHS/USCIS–ICE–CBP–001 Alien File, Index, and National File Tracking System of Records, 76 FR 34233.

DHS is updating the DHS/USCIS–ICE–CBP–001 Alien File, Index, and National File Tracking System of Records to include the following substantive changes: (1) The addition of three routine uses and the modification of eight routine uses to clarify DHS's sharing of information from this system; (2) Updated notification and access procedures; and (3) Language acknowledging the concurrent publication of a Final Rule exempting this system from certain provisions of the Privacy Act, including an exemption for records that are classified.

DHS added five routine uses with the letter in parentheses corresponding to the new routine use:

(H) Allows DHS to share information with other federal, state, tribal, local or government agencies when these other agencies are investigating or prosecuting violations of statute rules, regulations, orders, and/or licenses.

(I) Allows DHS to share information with third parties during the course of a law enforcement investigation in order to obtain pertinent information.

(J) Allows DHS to share information with organizations or persons when there is reason to believe that the recipient is or could be the target of a particular terrorist activity.

(LL) Allows DHS to share information with family members when, under 8 CFR § 103.8, DHS or an Executive Office for Immigration Review immigration judge makes a decision that an alien is mentally incompetent.

(OO) Allows DHS to share information with domestic government agencies when those agencies are seeking to determine the immigration status of individuals who have applied to purchase or obtain a firearm in the United States.

Below is a summary of the eight routine use modifications with the letter in parentheses corresponding to the routine use updated:

(A) Updated to clarify that records will be provided to ''the United States or any agency thereof,'' without any further modifiers to the section.

(C) Updated to note that records will be provided specifically to General Services Administration rather than other federal government agencies.

(D) Updated to clarify language that records will not be given to individuals, but to agencies or organizations performing the audit.

(E) Updated to clarify language regarding a suspected or confirmed compromise of personally identifiable information in the system.

(F) Updated to clarify language that the contractors are subject to the requirements laid out in this system of records notice and the Privacy Act.

(K) Updated to clarify the language to reflect the practice associated with naturalization process.

(L) Updated to clarify that records will be provided to ''the United States or any agency thereof,'' without any further modifiers to the section.

(M) Update language to refer to correct Code of Federal Regulations citation for the definition of an attorney or representative, and clarified that it is at the Department's discretion to use this routine use, as with any routine use published in this system of records.

Consistent with DHS's information sharing mission, information stored in the DHS/USCIS–ICE–CBP–001 may be shared with other DHS components that have a need to know the information to carry out their national security, law

enforcement, immigration, intelligence, or other homeland security functions. In addition, DHS may share with appropriate federal, state, local, tribal, territorial, foreign, or international government agencies after DHS determines that the receiving component or agency has a need to know the information to carry out national security, law enforcement, immigration, intelligence, or other functions consistent with the routine uses set forth in the A-File SORN, or other applicable exemptions under the Privacy Act.

Additionally, DHS is issuing a Final Rule elsewhere in the **Federal Register**, to exempt this system of records from certain provisions of the Privacy Act. This updated system will be included in DHS's inventory of record systems.

II. Privacy Act

The Privacy Act embodies fair information practice principles in a statutory framework governing the means by which federal government agencies collect, maintain, use, and disseminate individuals' records. The Privacy Act applies to information that is maintained in a ''system of records.'' A ''system of records'' is a group of any records under the control of an agency from which information is retrieved by the name of an individual or by some identifying number, symbol, or other identifying particular assigned to the individual. In the Privacy Act, an individual is defined to encompass U.S. citizens and lawful permanent residents. As a matter of policy (*Privacy Policy Guidance Memorandum 2007–01,* most recently updated January 7, 2009), DHS extends administrative Privacy Act protections to all individuals, regardless of citizenship, when systems of records maintain information on U.S. citizens, lawful permanent residents, and visitors.

The Privacy Act requires each agency to publish in the **Federal Register** a description denoting the type and character of each system of records that the agency maintains, and the routine uses that are contained in each system in order to make agency record keeping practices transparent, to notify individuals regarding the uses to which their records are put, and to assist individuals with more easily finding such files within the agency. Below is the description of the DHS/USCIS–ICE–CBP–001 Alien File, Index, and National File Tracking System of Records.

In accordance with 5 U.S.C. 552a(r), DHS has provided a report of this system of records to the Office of Management and Budget and to Congress.

SYSTEM OF RECORDS

DHS/USCIS–ICE–CBP–001

SYSTEM NAME:

Department of Homeland Security U.S. Citizenship and Immigration Services, U.S. Immigration and Customs Enforcement, U.S. Customs and Border Protection—001 Alien File, Index, and National File Tracking System of Records.

SECURITY CLASSIFICATION:

Unclassified, sensitive, for official use only, and classified.

SYSTEM LOCATION:

Alien Files (A-Files) are maintained in electronic and paper format throughout DHS. Digitized A-Files are located in the Enterprise Document Management System (EDMS). The Central Index System (CIS) maintains an index of the key personally identifiable information (PII) in the A-File, which can be used to retrieve additional information through such applications as Enterprise Citizenship and Immigrations Services Centralized Operational Repository (eCISCOR), the Person Centric Query Service (PCQS) and the Microfilm Digitization Application System (MiDAS). The National File Tracking System (NFTS) provides a tracking system of where the A-Files are physically located, including whether the file has been digitized.

The databases maintaining the above information are located within the DHS data center in the Washington, DC metropolitan area as well as throughout the country. Computer terminals providing electronic access are located at U.S. Citizenship and Immigration Services (USCIS) sites at Headquarters and in the Field throughout the United States and at appropriate facilities under the jurisdiction of the U.S. Department of Homeland Security (DHS) and other locations at which officers of DHS component agencies may be posted or operate to facilitate DHS's mission of homeland security. Hard copies of the A-Files are primarily located at the records centers in Lee Summit, Missouri; Suitland, Maryland; San Bruno, California; Seattle, Washington; and Dayton, Ohio. Hard copies may also be located at Headquarters, Regional, District, and other USCIS file control offices in the United States and foreign countries as detailed on the agency's Web site, *http://www.USCIS.gov*. Hard copies may also be located at the offices and facilities of U.S. Immigration and Customs Enforcement (ICE) and U.S. Customs and Border Protection (CBP).

CATEGORIES OF INDIVIDUALS COVERED BY THE SYSTEM:

- Lawful permanent residents;
- Naturalized U.S. citizens;
- U.S. citizens when petitioning for benefits under the Immigration and Nationality Act (INA) on behalf of another individual;
- Individuals who receive or petition for benefits under the INA, and;
- Individuals who are subject to the enforcement provisions of the INA;
- Individuals who are subject to the INA and:
  - Are under investigation by DHS for possible national security threats or threats to the public safety,
  - were investigated by DHS in the past,
  - are suspected of violating immigration-related criminal or civil provisions of treaties, statutes, regulations, Executive Orders, and Presidential proclamations administered by DHS, or
  - are witnesses and informants having knowledge of such violations;
- Relatives and associates of any of the individuals listed above who are subject to the INA;
- Individuals who have renounced their U.S. Citizenship; or
- Preparers, attorneys, and representatives who assist individuals during benefit and enforcement proceedings under the INA.

Note: Individuals may fall within one or more of these categories.

CATEGORIES OF RECORDS IN THIS SYSTEM INCLUDE:

A. The hardcopy paper A-File, which contains the official record material about each individual for whom DHS has created a record under the INA such as: naturalization certificates; various documents and attachments (e.g., birth and marriage certificates); applications and petitions for benefits under the immigration and nationality laws; reports of arrests and investigations; statements; other reports; records of proceedings before or filings made with the U.S. immigration courts and any administrative or federal district court or court of appeal; correspondence; and memoranda. Specific data elements may include:

- Alien Registration Number(s) (A-Numbers);
- Receipt file number(s);
- Full name and any aliases used;
- Physical and mailing addresses;
- Phone numbers and email addresses;
- Social Security Number (SSN);

- Date of birth;
- Place of birth (city, state, and country);
- Countries of citizenship;
- Gender;
- Physical characteristics (height, weight, race, eye and hair color, photographs, fingerprints);
- Government-issued identification information (i.e., passport, driver's license):
  - Document type,
  - issuing organization,
  - document number, and
  - expiration date;
- Military membership;
- Arrival/Departure information (record number, expiration date, class of admission, etc.);
- Federal Bureau of Investigation (FBI) Identification Number;
- Fingerprint Identification Number;
- Immigration enforcement history, including arrests and charges, immigration proceedings and appeals, and dispositions including removals or voluntary departures;
- Immigration status;
- Family history;
- Travel history;
- Education history;
- Employment history;
- Criminal history;
- Professional accreditation information;
- Medical information relevant to an individual's application for benefits under the INA before DHS or the immigration court, an individual's removability from and/or admissibility to the United States, or an individual's competency before the immigration court;
- Specific benefit eligibility information as required by the benefit being sought; and
- Video or transcript of immigration interview.

B. EDMS maintains the electronic copy of the A-File (same information as above with the exception of material that cannot be scanned such as cassette tapes, CDs, or DVDs) if it was scanned from the paper file.

C. CIS contains information on those individuals who during their interactions with DHS have been assigned an A-Number. The system contains biographic information on those individuals, allowing DHS employees to quickly review the individual's immigration status. The information in the system can then be used to retrieve additional information on the individual from other systems. The information in the system can be used to request the hard copy A-File from the DHS File Control Office that has custody of the file. Specific data elements may include:

- A-Number(s);
- Full name and any aliases used;
- SSN;
- Date of birth;
- Place of birth (city, state, and country);
- Country of citizenship;
- Gender;
- Government issued identification information (i.e., passport, driver's license):
  - Document type,
  - issuing organization,
  - document number, and
  - expiration date;
- Arrival/Departure information (record number, expiration date, class of admission etc.);
- Immigration status;
- Father and Mother's first name;
- FBI Identification Number;
- Fingerprint Identification Number;
- Immigration enforcement history, including arrests and charges, immigration proceedings and appeals, and dispositions including removals or voluntary departures; and
- File Control Office location of the paper or electronic A-File.

D. NFTS contains the location of the A-File to a more detailed level within the DHS File Control Office. Specific data elements include:

- A-Number(s);
- Receipt File Number; and
- Location of the paper or electronic A-File and Receipt File at and within the DHS File Control Office, as well as the history of who has maintained the A-File, including the component, section, and employee.

AUTHORITY FOR MAINTENANCE OF THE SYSTEM:

Authority for maintaining this system is in Sections 103 and 290 of the INA, as amended (8 U.S.C. 1103 and 1360), and the regulations issued pursuant thereto; and Section 451 of the Homeland Security Act of 2002 (Pub. L. 107–296), codified at 6 U.S.C. 271.

PURPOSE(S):

The purpose of the A-File is to facilitate the enforcement and provision of benefits under the INA and related statutes. A-Files, EDMS, CIS, and NFTS are used primarily by DHS employees for immigration benefits processing, protection of national security, and administering and enforcing immigration and nationality laws and related statutes.

The purpose of the A-File is to document an individual's benefits and enforcement transactions as he/she passes through the U.S. immigration and inspection process.

The purpose of CIS is to provide a searchable central index of A-Files and to support the location and transfer of A-Files among DHS personnel and offices as needed in support of immigration benefits and enforcement actions.

The purpose of NFTS is to accurately account for the specific physical location of A-Files and Receipt Files within a DHS File Control Office, and to track the request and transfer of all A-Files and Receipt Files.

These records assist DHS with processing applications for benefits under applicable immigration laws; detecting violations of these laws; supporting the referral of such violations for prosecution or other appropriate enforcement action; supporting law enforcement efforts and the inspection process; and supporting protection of the United States borders.

ROUTINE USES OF RECORDS MAINTAINED IN THE SYSTEM, INCLUDING CATEGORIES OF USERS AND THE PURPOSES OF SUCH USES:

Note: Even when a valid routine use permits disclosure of information from this system of records to a third party, in some cases such disclosure may not be permissible because of confidentiality laws and policies that limit the sharing of information about the application for, or award of certain immigration benefits. For example, information in this system of records contained in or pertaining to applications for asylum or refugee protection, information relating to persons who have pending or approved petitions for protection under the Violence Against Women Act (VAWA), Seasonal Agricultural Worker or Legalization claims, the Temporary Protected Status of an individual, and information relating to S, T, or U visas should not be disclosed pursuant to a routine use unless disclosure is otherwise permissible under the confidentiality statutes, regulations, or policies applicable to that information. However, these confidentiality provisions do not prevent DHS from disclosing information to the U.S. Department of Justice and Offices of the United States Attorneys as part of an ongoing criminal or civil investigation.

In addition to those disclosures generally permitted under 5 U.S.C. 552a(b) of the Privacy Act, all or a portion of the records or information contained in this system may be disclosed outside DHS as a routine use pursuant to 5 U.S.C. 552a(b)(3) as follows:

A. To the Department of Justice (DOJ), including U. S. Attorneys' Offices, or other federal agency conducting litigation or in proceedings before any court, adjudicative or administrative

body, when it is necessary or relevant to the litigation and one of the following is a party to the litigation or has an interest in such litigation:

1. DHS or any component thereof;
2. Any employee of DHS in his/her official capacity;
3. Any employee of DHS in his/her individual capacity when DOJ or DHS has agreed to represent the employee; or
4. The United States or any agency thereof.

B. To a congressional office from the record of an individual in response to an inquiry from that congressional office made at the request of the individual to whom the record pertains.

C. To the National Archives and Records Administration or General Services Administration pursuant to records management inspections being conducted under the authority of 44 U.S.C. 2904 and 2906.

D. To an agency or organization, for the purpose of performing audit or oversight operations as authorized by law, but only such information as is necessary and relevant to such audit or oversight function.

E. To appropriate agencies, entities, and persons when:

1. DHS suspects or has confirmed that the security or confidentiality of information in the system of records has been compromised;
2. DHS has determined that as a result of the suspected or confirmed compromise, there is a risk of identity theft or fraud, harm to economic or property interests, harm to the security or integrity of this system or other systems or programs (whether maintained by DHS or another agency or entity) or harm to the individuals that rely upon the compromised information; and
3. The disclosure made to such agencies, entities, and persons is reasonably necessary to assist in connection with DHS's efforts to respond to the suspected or confirmed compromise and prevent, minimize, or remedy such harm.

F. To contractors and their agents, grantees, experts, consultants, and others performing or working on a contract, service, grant, cooperative agreement, or other assignment for DHS, when necessary to accomplish an agency function related to this system of records. Individuals provided information under this routine use are subject to the same Privacy Act requirements and limitations on disclosure as are applicable to DHS officers and employees.

G. To an appropriate federal, state, tribal, territorial, local, international, or foreign law enforcement agency or other appropriate authority charged with investigating or prosecuting a violation or enforcing or implementing a law, rule, regulation, or order, when a record, either on its face or in conjunction with other information, indicates a violation or potential violation of law, which includes criminal, civil, or regulatory violations.

H. To appropriate federal, state, tribal, local, or foreign governmental agencies or multilateral governmental organizations responsible for investigating or prosecuting the violations of, or for enforcing or implementing, a statute, rule, regulation, order, or license, when DHS believes the information would assist in enforcing applicable civil or criminal laws.

I. To third parties during the course of a law enforcement investigation to the extent necessary to obtain information pertinent to the investigation.

J. To an organization or person in either the public or private sector, either foreign or domestic, when there is a reason to believe that the recipient is or could become the target of a particular terrorist activity or conspiracy, or when the information is relevant to the protection of life, property, or other vital interests of a person.

K. To clerks and judges of courts exercising naturalization jurisdiction for the purpose of granting or revoking naturalization.

L. To courts, magistrates, administrative tribunals, opposing counsel, parties, and witnesses, in the course of immigration, civil, or criminal proceedings before a court or adjudicative body when it is necessary or relevant to the litigation or proceeding and the following is a party to the proceeding or has an interest in the proceeding:

1. DHS or any component thereof; or
2. Any employee of DHS in his or her official capacity; or
3. Any employee of DHS in his or her individual capacity when the DOJ or DHS has agreed to represent the employee; or
4. The United States or any agency thereof.

M. To an attorney or representative (as defined in 8 CFR 1.2) who is acting on behalf of an individual covered by this system of records in connection with any proceeding before USCIS, ICE, or CBP or the Executive Office for Immigration Review, as required by law or as deemed necessary in the discretion of the Department.

N. To DOJ (including Offices of the United States Attorneys) or other federal agency conducting litigation or in proceedings before any court, adjudicative, or administrative body, when necessary to assist in the development of such agency's legal and/or policy position.

O. To the Department of State in the processing of petitions or applications for benefits under the INA, and all other immigration and nationality laws including treaties and reciprocal agreements; or when the Department of State requires information to consider and/or provide an informed response to a request for information from a foreign, international, or intergovernmental agency, authority, or organization about an alien or an enforcement operation with transnational implications.

P. To appropriate federal, state, local, tribal, territorial, or foreign governments, as well as to other individuals and organizations during the course of an investigation by DHS or the processing of a matter under DHS's jurisdiction, or during a proceeding within the purview of the immigration and nationality laws, when DHS deems that such disclosure is necessary to carry out its functions and statutory mandates.

Q. To an appropriate federal, state, tribal, territorial, local, or foreign government agency or organization, or international organization, lawfully engaged in collecting law enforcement intelligence, whether civil or criminal, or charged with investigating, prosecuting, enforcing, or implementing civil or criminal laws, related rules, regulations, or orders, to enable these entities to carry out their law enforcement responsibilities, including the collection of law enforcement intelligence and the disclosure is appropriate to the proper performance of the official duties of the person receiving the information.

R. To an appropriate federal, state, local, tribal, territorial, foreign, or international agency, if the information is relevant to a requesting agency's decision concerning the hiring or retention of an individual, or issuance of a security clearance, license, contract, grant, or other benefit, or if the information is relevant to a DHS decision concerning the hiring or retention of an employee, the issuance of a security clearance, the reporting of an investigation of an employee, the letting of a contract, or the issuance of a license, grant, or other benefit.

S. To an appropriate federal, state, local, tribal, territorial, foreign, or international agency, if DHS determines: (1) The information is relevant and necessary to that agency's decision concerning the hiring or retention of an individual, or issuance of a security

clearance, license, contract, grant, or other benefit; and (2) Failure to disclose the information is likely to create a substantial risk to government facilities, equipment, or personnel; sensitive information; critical infrastructure; or public safety.

T. To appropriate federal, state, local, tribal, or foreign governmental agencies or multilateral governmental organizations for the purpose of protecting the vital interests of a data subject or other persons, including to assist such agencies or organizations in preventing exposure to, or transmission of a communicable or quarantinable disease or to combat other significant public health threats; appropriate notice will be provided of any identified health threat or risk.

U. To an individual's current employer to the extent necessary to determine employment eligibility or to a prospective employer or government agency to verify whether an individual is eligible for a government-issued credential that is a condition of employment.

V. To a former employee of DHS, in accordance with applicable regulations, for purposes of: responding to an official inquiry by a federal, state, or local government entity or professional licensing authority; or facilitating communications with a former employee that may be necessary for personnel-related or other official purposes when DHS requires information or consultation assistance from the former employee regarding a matter within that person's former area of responsibility.

W. To the Office of Management and Budget in connection with the review of private relief legislation as set forth in OMB Circular No. A–19 at any stage of the legislative coordination and clearance process as set forth in the Circular.

X. To the U.S. Senate Committee on the Judiciary or the U.S. House of Representatives Committee on the Judiciary when necessary to inform members of Congress about an alien who is being considered for private immigration relief.

Y. To a federal, state, tribal, or local government agency and/or to domestic courts to assist such agencies in collecting the repayment of loans, or fraudulently or erroneously secured benefits, grants, or other debts owed to them or to the United States Government, or to obtain information that may assist DHS in collecting debts owed to the United States Government.

Z. To an individual or entity seeking to post or arrange, or who has already posted or arranged, an immigration bond for an alien, to aid the individual or entity in (1) identifying the location of the alien; (2) posting the bond; (3) obtaining payments related to the bond; or (4) conducting other administrative or financial management activities related to the bond.

AA. To a coroner for purposes of affirmatively identifying a deceased individual (whether or not such individual is deceased as a result of a crime).

BB. Consistent with the requirements of the INA, to the Department of Health and Human Services (HHS), the Centers for Disease Control and Prevention (CDC), or to any state or local health authorities, to:

1. Provide proper medical oversight of DHS-designated civil surgeons who perform medical examinations of both arriving aliens and of those requesting status as lawful permanent residents; and

2. Ensure that all health issues potentially affecting public health and safety in the United States are being or have been, adequately addressed.

CC. To a federal, state, local, tribal, or territorial government agency seeking to verify or ascertain the citizenship or immigration status of any individual within the jurisdiction of the agency for any purpose authorized by law.

DD. To the Social Security Administration (SSA) for the purpose of issuing a SSN and card to an alien who has made a request for a SSN as part of the immigration process and in accordance with any related agreements in effect between the SSA, DHS, and the Department of State entered into pursuant to 20 CFR 422.103(b)(3), 422.103(c)(3), and 422.106(a), or other relevant laws and regulations.

EE. To federal and foreign government intelligence or counterterrorism agencies or components when DHS becomes aware of an indication of a threat or potential threat to national or international security, or when such use is to conduct national intelligence and security investigations or assist in anti-terrorism efforts.

FF. To third parties to facilitate placement or release of an individual (e.g., at a group home, homeless shelter) who has been or is about to be released from DHS custody, but only such information that is relevant and necessary to arrange housing or continuing medical care for the individual.

GG. To an appropriate domestic government agency or other appropriate authority for the purpose of providing information about an individual who has been or is about to be released from DHS custody who, due to a condition such as mental illness, may pose a health or safety risk to himself/herself or to the community. DHS will only disclose information about the individual that is relevant to the health or safety risk they may pose and/or the means to mitigate that risk (e.g., the individual's need to remain on certain medication for a serious mental health condition).

HH. To foreign governments for the purpose of coordinating and conducting the removal of individuals to other nations under the INA; and to international, foreign, and intergovernmental agencies, authorities, and organizations in accordance with law and formal or informal international arrangements.

II. To a federal, state, local, territorial, tribal, international, or foreign criminal, civil, or regulatory law enforcement authority when the information is necessary for collaboration, coordination, and de-confliction of investigative matters, prosecutions, and/or other law enforcement actions to avoid duplicative or disruptive efforts and to ensure the safety of law enforcement officers who may be working on related law enforcement matters.

JJ. To the DOJ Federal Bureau of Prisons and other federal, state, local, territorial, tribal, and foreign law enforcement or custodial agencies for the purpose of placing an immigration detainer on an individual in that agency's custody, or to facilitate the transfer of custody of an individual from DHS to the other agency. This will include the transfer of information about unaccompanied minor children to HHS to facilitate the custodial transfer of such children from DHS to HHS.

KK. To federal, state, local, tribal, territorial, or foreign governmental or quasi-governmental agencies or courts to confirm the location, custodial status, removal, or voluntary departure of an alien from the United States, in order to facilitate the recipients' exercise of responsibilities pertaining to the custody, care, or legal rights (including issuance of a U.S. passport) of the removed individual's minor children, or the adjudication or collection of child support payments or other debts owed by the removed individual.

LL. To a federal, state, tribal, territorial, local, international, or foreign government agency or multilateral governmental organization for the purpose of consulting with that agency or entity: (1) To assist in making a determination regarding redress for an individual in connection with the operations of a DHS component or program; (2) for the purpose of verifying

the identity of an individual seeking redress in connection with the operations of a DHS component or program; or (3) for the purpose of verifying the accuracy of information submitted by an individual who has requested such redress on behalf of another individual.

MM. To family members, guardians, committees, friends, or other agents identified by law or regulation to receive notification, decisions, and other papers as provided in 8 CFR 103.8 from the Department of Homeland Security or Executive Office for Immigration Review following verification of a familial or agency relationship with an alien when DHS is aware of indicia of incompetency or when an immigration judge determines an alien is mentally incompetent.

NN. To the news media and the public, with the approval of the Chief Privacy Officer in consultation with counsel, when there exists a legitimate public interest in the disclosure of the information or when disclosure is necessary to preserve confidence in the integrity of DHS or is necessary to demonstrate the accountability of DHS's officers, employees, or individuals covered by the system, except to the extent it is determined that release of the specific information in the context of a particular case would constitute an unwarranted invasion of personal privacy.

OO. To domestic governmental agencies seeking to determine the immigration status of persons who have applied to purchase/obtain a firearm in the United States, pursuant to checks conducted on such persons under the Brady Handgun Violence Prevention Act or other applicable laws.

DISCLOSURE TO CONSUMER REPORTING AGENCIES:

None.

POLICIES AND PRACTICES FOR STORING, RETRIEVING, ACCESSING, RETAINING, AND DISPOSING OF RECORDS IN THE SYSTEM:

STORAGE:

Records in this system are stored electronically or on paper in secure facilities in a locked drawer behind a locked door. The records may be stored on magnetic disc, tape, digital media, and CD–ROM.

RETRIEVABILITY:

Digitized A-Files maintained in EDMS can be searched and retrieved by any of the following fields alone or in any combination:

- A-Number;
- Last name;
- First name;
- Middle name;
- Aliases;
- Date of birth;
- Country of birth;
- Gender; and
- Through a full text-based search of records contained in the digitized A-File (based on optical character recognition of the scanned images).

The location of the paper record from which the digitized A-File was produced can be searched in CIS using the following data:

- A-Number;
- Full name;
- Alias;
- Sounds-like name with or without date of birth;
- Certificate of Citizenship or Naturalization Certificate number;
- Driver's License Number;
- FBI Identification Number;
- Fingerprint Identification Number;
- I–94 admission number;
- Passport number;
- SSN; or
- Travel document number.

The location of the paper or digitized record A-Files and Receipt Files can be searched in NFTS using the following data:

- A-Number; or
- Receipt File Number.

SAFEGUARDS:

Records in this system are safeguarded in accordance with applicable rules and policies, including all applicable DHS automated systems security and access policies. Strict controls have been imposed to minimize the risk of compromising the information that is being stored. Access to the computer system containing the records in this system is limited to those individuals who have a need to know the information for the performance of their official duties and who have appropriate clearances or permissions.

RETENTION AND DISPOSAL:

The A-File records are permanent whether hard copy or electronic. A-Files are transferred to the custody of the National Archives 100 years after the individual's date of birth. Newly-eligible files are transferred to the National Archives every five years. When a paper A-File is digitized, the digitized A-File maintained in EDMS becomes the official record and maintains the same retention schedule as the original paper A-File. The hard copy files are sent to the records center once the records have been digitized.

CIS records are permanently retained on-site because they are the index of where the physical A-File is and whether it has been transferred to the National Archives.

NFTS records are temporary and deleted when they are no longer needed for agency business. The records exist only as a reference to a physical or digital file, and exist for as long as the referenced file exists. NFTS records associated with an A-File will be retained on a permanent basis even after the A-File has been retired to NARA to retain accurate recordkeeping. Receipt Files with a shorter retention period will have the associated NFTS record destroyed or deleted once the file has been destroyed.

SYSTEM MANAGER AND ADDRESS:

The DHS system manager is the Chief, Records Division, U.S. Citizenship and Immigration Services, Department of Homeland Security, 20 Massachusetts Avenue NW., Washington, DC 20529.

NOTIFICATION PROCEDURE:

The Secretary of Homeland Security has exempted this system from the notification, access, and amendment procedures of the Privacy Act because it contains classified and sensitive unclassified information related to intelligence, counterterrorism, homeland security, and law enforcement programs. These exemptions apply only to the extent that records in the system are subject to exemption. However, USCIS will consider individual requests to determine whether or not information may be released. Individuals seeking notification of and access to any record contained in this system of records, or seeking to contest its content, may submit a request in writing to the USCIS FOIA Officer, whose contact information can be found at *http://www.dhs.gov/foia* under ''Contacts.'' When seeking records about yourself from this system of records or any other DHS system of records your request must conform with the Privacy Act regulations set forth in 6 CFR Part 5. You must first verify your identity, meaning that you must provide your full name, current address, and date and place of birth. You must sign your request, and your signature must either be notarized or submitted under 28 U.S.C. § 1746, a law that permits statements to be made under penalty of perjury as a substitute for notarization. While no specific form is required, you may obtain forms for this purpose from the Chief Privacy Officer and Chief Freedom of Information Act Officer, *http://www.dhs.gov/foia* or 1–866–431–0486. In addition, you should:

- Explain why you believe DHS would have information on you;

• Identify which component(s) of DHS you believe may have the information about you;

• Specify when you believe the records would have been created; and

• Provide any other information that will help the FOIA staff determine which DHS component agency may have responsive records.

If your request is seeking records pertaining to another living individual, you must include a statement from that individual certifying his/her agreement for you to access his/her records.

Without the above information, the component(s) may not be able to conduct an effective search, and your request may be denied due to lack of specificity or lack of compliance with applicable regulations.

RECORD ACCESS PROCEDURES:

See ''Notification procedure'' above.

CONTESTING RECORD PROCEDURES:

See ''Notification procedure'' above.

RECORD SOURCE CATEGORIES:

Basic information contained in DHS records is supplied by individuals on Department of State and DHS applications and forms. Other information comes from inquiries or complaints from members of the general public and members of Congress; referrals of inquiries or complaints directed to the President or Secretary of Homeland Security; reports of investigations, sworn statements, correspondence, official reports, memoranda, and written referrals from other entities, including federal, state, and local governments, various courts and regulatory agencies, foreign government agencies, and international organizations.

EXEMPTIONS CLAIMED FOR THE SYSTEM:

The Secretary of Homeland Security has exempted this system from the following provisions of the Privacy Act pursuant to 5 U.S.C. 552a(j)(2): 5 U.S.C. 552a(c)(3), (c)(4), (d), (e)(1), (e)(2), (e)(3), (e)(4)(G), (e)(4)(H), (e)(4)(I), (e)(5), (e)(8), (e)(12), (f), (g)(1), and (h). Additionally, the Secretary of Homeland Security has exempted this system from the following provisions of the Privacy Act pursuant to 5 U.S.C. 552a(k)(1) and (k)(2); 5 U.S.C. 552a(c)(3), (d), (e)(1), (e)(4)(G), (e)(4)(H), (e)(4)(I), and (f).

Dated: October 28, 2013.

Jonathan R. Cantor,

Deputy Chief Privacy Officer, Department of Homeland Security.

[FR Doc. 2013–27895 Filed 11–20–13; 8:45 am]

BILLING CODE 9111–97–P

DEPARTMENT OF HOMELAND SECURITY

U.S. Citizenship and Immigration Services

[OMB Control Number 1615–0117]

Agency Information Collection Activities: myE-Verify, Revision of a Currently Approved Collection

ACTION: 60-Day Notice.

SUMMARY: The Department of Homeland Security (DHS), U.S. Citizenship and Immigration Services (USCIS) invites the general public and other Federal agencies to comment upon this proposed revision of a currently approved collection of information. In accordance with the Paperwork Reduction Act (PRA) of 1995, the information collection notice is published in the **Federal Register** to obtain comments regarding the nature of the information collection, the categories of respondents, the estimated burden (i.e., the time, effort, and resources used by the respondents to respond), the estimated cost to the respondent, and the actual information collection instruments.

DATES: Comments are encouraged and will be accepted for 60 days until January 21, 2014.

ADDRESSES: All submissions received must include the OMB Control Number 1615–0117 in the subject box, the agency name and Docket ID USCIS–2010–0014. To avoid duplicate submissions, please use only one of the following methods to submit comments:

(1) *Online.* Submit comments via the Federal eRulemaking Portal Web site at *www.regulations.gov* under e-Docket ID number USCIS–2010–0014;

(2) *Email.* Submit comments to *USCISFRComment@uscis.dhs.gov*;

(3) *Mail.* Submit written comments to DHS, USCIS, Office of Policy and Strategy, Chief, Regulatory Coordination Division, 20 Massachusetts Avenue NW., Washington, DC 20529–2140.

SUPPLEMENTARY INFORMATION:

Comments

Regardless of the method used for submitting comments or material, all submissions will be posted, without change, to the Federal eRulemaking Portal at *http://www.regulations.gov*, and will include any personal information you provide. Therefore, submitting this information makes it public. You may wish to consider limiting the amount of personal information that you provide in any voluntary submission you make to DHS. DHS may withhold information provided in comments from public viewing that it determines may impact the privacy of an individual or is offensive. For additional information, please read the Privacy Act notice that is available via the link in the footer of *http://www.regulations.gov*.

Note: The address listed in this notice should only be used to submit comments concerning this information collection. Please do not submit requests for individual case status inquiries to this address. If you are seeking information about the status of your individual case, please check ''My Case Status'' online at: *https://egov.uscis.gov/cris/Dashboard.do*, or call the USCIS National Customer Service Center at 1–800–375–5283.

Written comments and suggestions from the public and affected agencies should address one or more of the following four points:

(1) Evaluate whether the proposed collection of information is necessary for the proper performance of the functions of the agency, including whether the information will have practical utility;

(2) Evaluate the accuracy of the agency's estimate of the burden of the proposed collection of information, including the validity of the methodology and assumptions used;

(3) Enhance the quality, utility, and clarity of the information to be collected; and

(4) Minimize the burden of the collection of information on those who are to respond, including through the use of appropriate automated, electronic, mechanical, or other technological collection techniques or other forms of information technology, e.g., permitting electronic submission of responses.

Overview of This Information Collection

(1) *Type of Information Collection:* Revision of a Currently Approved Collection.

(2) *Title of the Form/Collection:* myE-Verify (previously, E-Verify Self Check Program).

(3) *Agency form number, if any, and the applicable component of the DHS sponsoring the collection:* USCIS (No form number).

(4) *Affected public who will be asked or required to respond, as well as a brief abstract: Primary:* Individuals or households. myE-Verify will allow workers in the United States to enter data into the E-Verify system to ensure that the information relating to their eligibility to work is correct and accurate. The additional features of myE-Verify will allow employees to proactively engage with E-Verify

through a suite of web-based services. The features of myE-Verify are free and will provide individuals with a secure account that facilitates an ongoing relationship between the user and USCIS.

(5) *An estimate of the total number of respondents and the amount of time estimated for an average respondent to respond:*

- E-Verify Self Check—Identity Authentication 2,900,000 responses at 0.0833 hours (5 minutes) per response;
- E-Verify Self Check—Query 2,175,000 responses at 0.0833 hours (5 minutes) per response;
- E-Verify Self Check—Further Action Pursued 5,582 responses at 1.183 hours (1 hour and 11 minutes) per response; and
- myE-Verify Account Creation 14,846 responses at 0.25 hours (15 minutes) per response.

(6) *An estimate of the total public burden (in hours) associated with the collection:* 433,063 annual burden hours.

If you need a copy of the information collection instrument with instructions, or additional information, please visit the Federal eRulemaking Portal site at: *http://www.regulations.gov*. We may also be contacted at: USCIS, Office of Policy and Strategy, Regulatory Coordination Division, 20 Massachusetts Avenue NW., Washington, DC 20529–2140, Telephone number 202–272–8377.

Dated: November 18, 2013.

Laura Dawkins,

Chief, Regulatory Coordination Division, Office of Policy and Strategy, U.S. Citizenship and Immigration Services, Department of Homeland Security.

[FR Doc. 2013–27945 Filed 11–20–13; 8:45 am]

BILLING CODE 9111–97–P

DEPARTMENT OF THE INTERIOR

Bureau of Land Management

[WO300 L91310000 PP0000]

Renewal of Approved Information Collection

AGENCY: Bureau of Land Management, Interior.

ACTION: 30-day notice and request for comments.

SUMMARY: The Bureau of Land Management (BLM) has submitted an information collection request to the Office of Management and Budget (OMB) to continue the collection of information from those who wish to participate in the exploration, development, production, and utilization of geothermal resources on BLM-managed public lands, and on lands managed by other Federal agencies. The Office of Management and Budget (OMB) previously approved this information collection activity, and assigned it control number 1004–0132.

DATES: The OMB is required to respond to this information collection request within 60 days but may respond after 30 days. For maximum consideration, written comments should be received on or before December 23, 2013.

ADDRESSES: Please submit comments directly to the Desk Officer for the Department of the Interior (OMB #1004–0132), Office of Management and Budget, Office of Information and Regulatory Affairs, fax 202–395–5806, or by electronic mail at *OIRA_submission@omb.eop.gov.* Please provide a copy of your comments to the BLM. You may do so via mail, fax, or electronic mail.

Mail: U.S. Department of the Interior, Bureau of Land Management, 1849 C Street NW., Room 2134LM, Attention: Jean Sonneman, Washington, DC 20240.

Fax: to Jean Sonneman at 202–245–0050.

Electronic mail: Jean_Sonneman@blm.gov.

Please indicate ''Attn: 1004–0132'' regardless of the form of your comments.

FOR FURTHER INFORMATION CONTACT: Allen McKee, at 801–539–4045. Persons who use a telecommunication device for the deaf may call the Federal Information Relay Service at 1–800–877–8339, to leave a message for Mr. McKee. You may also review the information collection request online at *http://www.reginfo.gov/public/do/PRAMain.*

SUPPLEMENTARY INFORMATION: The Paperwork Reduction Act (44 U.S.C. 3501–3521) and OMB regulations at 5 CFR part 1320 provide that an agency may not conduct or sponsor a collection of information unless it displays a currently valid OMB control number. Until OMB approves a collection of information, you are not obligated to respond. In order to obtain and renew an OMB control number, Federal agencies are required to seek public comment on information collection and recordkeeping activities (see 5 CFR 1320.8(d) and 1320.12(a)).

As required at 5 CFR 1320.8(d), the BLM published a 60-day notice in the **Federal Register** on August 29, 2013 (78 FR 53474), and the comment period ended October 28, 2013. The BLM received no comments. The BLM now requests comments on the following subjects:

1. Whether the collection of information is necessary for the proper functioning of the BLM, including whether the information will have practical utility;
2. The accuracy of the BLM's estimate of the burden of collecting the information, including the validity of the methodology and assumptions used;
3. The quality, utility and clarity of the information to be collected; and
4. How to minimize the information collection burden on those who are to respond, including the use of appropriate automated, electronic, mechanical, or other forms of information technology.

Please send comments as directed under **ADDRESSES** and **DATES**. Please refer to OMB control number 1004–0132 in your correspondence. Before including your address, phone number, email address, or other personal identifying information in your comment, you should be aware that your entire comment—including your personal identifying information—may be made publicly available at any time. While you can ask us in your comment to withhold your personal identifying information from public review, we cannot guarantee that we will be able to do so.

Title: Geothermal Resource Leasing and Geothermal Resource Unit Agreements (43 CFR Parts 3200 and 3280).

OMB Control Number: 1004–0132.

Summary: The BLM collects the information in order to decide whether or not to approve geothermal resource leases and unit agreements, process nominations for geothermal lease sales, and monitor compliance with granted approvals.

Frequency of Collection: On occasion, except for Monthly Report of Geothermal Operations (Form 3260–5), which is required monthly.

Forms:

- Form 3200–9, Notice of Intent to Conduct Geothermal Resource Exploration Operations;
- Form 3203–1, Nomination of Lands for Competitive Geothermal Leasing;
- Form 3260–2, Geothermal Drilling Permit;
- Form 3260–3, Geothermal Sundry Notice;
- Form 3260–4, Geothermal Well Completion Report; and
- Form 3260–5, Monthly Report of Geothermal Operations.

Description of Respondents: Those who wish to participate in the exploration, development, production, and utilization of geothermal resources

on BLM-managed public lands, and on lands managed by other Federal agencies.

Estimated Annual Responses: 913.

Estimated Annual Burden Hours: 5,409.

Estimated Annual Non-Hour Costs: $77,735.

The estimated annual burdens to respondents are itemized in the following table:

A. Type of response	B. Number of responses	C. Hours per response	D. Total hours
43 CFR subpart 3202 Lessee Qualifications	75	1	75
43 CFR subpart 3203 Nomination of Lands for Competitive Leasing Form 3203–1	80	1	80
43 CFR subpart 3204 Noncompetitive Leasing Other Than Direct Use Leases	50	4	200
43 CFR subpart 3205 Direct Use Leasing	10	10	100
43 CFR subpart 3206 Lease Issuance	155	1	155
43 CFR subpart 3207 Lease Terms and Extensions	50	1	50
43 CFR subpart 3210 Lease Consolidation	50	1	50
43 CFR subpart 3212 Lease Suspensions and Royalty Rate Reductions	10	40	400
43 CFR subpart 3213 Lease Relinquishment, Termination, Cancellation, and Reinstatement	10	40	400
43 CFR subpart 3213 Lease Reinstatement	5	1	5
43 CFR subpart 3217 Cooperative Agreements	10	40	400
43 CFR subpart 3251 Notice of Intent to Conduct Geothermal Exploration Activities Form 3200–9	12	8	96
43 CFR subpart 3252 Geothermal Sundry Notice Form 3260–3	100	8	800
43 CFR subpart 3253 Reports: Exploration Operations	12	8	96
43 CFR subpart 3256 Exploration Operations Relief and Appeals	10	8	80
43 CFR subpart 3261 Geothermal Drilling Permit Form 3260–2	60	8	480
43 CFR subpart 3264 Geothermal Well Completion Report Form 3260–4	12	10	120
43 CFR subpart 3272 Utilization Plans and Facility Construction Permits	10	10	100
43 CFR subpart 3273 Site License Application	10	10	100
43 CFR subpart 3273 Relinquishment, Assignment, or Transfer of a Site License	22	1	22
43 CFR subpart 3274 Commercial Use Permit	10	10	100
43 CFR subpart 3276 Monthly Report of Geothermal Operations Form 3260–5	120	10	1200
43 CFR subpart 3281 Unit Agreements	10	10	100
43 CFR subpart 3282 Participating Area	10	10	100
43 CFR subpart 3283 Unit Agreement Modifications	10	10	100
Totals	913		5,409

Jean Sonneman,

Bureau of Land Management, Information Collection Clearance Officer.

[FR Doc. 2013–27931 Filed 11–20–13; 8:45 am]

BILLING CODE 4310–84–P

DEPARTMENT OF THE INTERIOR

Bureau of Land Management

[LLNV930000 L51010000.ER0000 241A; 14–08807; MO# 4500058789]

Notice of Availability of the Record of Decision and Final Supplemental Environmental Impact Statement for the Ruby Pipeline Project in Oregon, Nevada, Utah, and Wyoming

AGENCY: Bureau of Land Management, Interior.

ACTION: Notice of availability.

SUMMARY: In accordance with the National Environmental Policy Act of 1969 (NEPA), as amended, and the Federal Land Policy and Management Act of 1976 (FLPMA), as amended, the Bureau of Land Management (BLM) has prepared a Record of Decision (ROD) and Final Supplemental Environmental Impact Statement (EIS) for the Ruby Pipeline Project (Project) and by this notice is announcing their availability.

ADDRESSES: A list of locations where copies of the ROD and Final Supplemental EIS are available can be found under **SUPPLEMENTARY INFORMATION.**

FOR FURTHER INFORMATION CONTACT: Mark Mackiewicz, PMP, Project Manager at 435–636–3616, BLM Price Field Office, 125 South 600 West, Price, UT 84501; email *mmackiew@blm.gov*.

Persons who use a telecommunications device for the deaf (TDD) may call the Federal Information Relay Service (FIRS) at 1–800–877–8339 to contact the above individual during normal business hours. The FIRS is available 24 hours a day, 7 days a week, to leave a message or question with the above individual. You will receive a reply during normal business hours.

SUPPLEMENTARY INFORMATION: The BLM has issued the ROD concurrent with the Final Supplemental EIS, as allowed under 40 CFR 1506.10(b).

The ROD documents the BLM's decision to reissue the right-of-way granted for the Project. The BLM will not require additional post-construction mitigation or changes to the grant issued on July 12, 2010. All elements of the July 12, 2010, ROD and subsequent decisions remain in full force and effect, including all stipulations, monitoring, and mitigation measures. The ROD is based on the analyses contained in the Final EIS, the Draft Supplemental EIS, and the Final Supplemental EIS for the Project. It also relies on the U.S. Fish and Wildlife Service's (FWS) Revision to the June 8, 2010, Ruby Pipeline Biological Opinion (BiOp). The Revised BiOp was published on July 5, 2013, and is posted on the Federal Energy Regulatory Commission's (FERC) Web site (www.ferc.gov). The ROD, Final Supplemental EIS, and Revised BiOp were developed in response to an order from the 9th U.S. Circuit Court of Appeals.

The project has been constructed and is currently in operation. In 2011, the Center for Biological Diversity, Defenders of Wildlife, and the Summit Lake Paiute Tribe, among other entities, filed petitions for review of the 2010 BiOp and the BLM's ROD in the 9th U.S. Circuit Court of Appeals, Case Nos. 10–72356, 10–72552, 10–72762, 10–72768, and 10–72775 (consolidated). In October 2012, the court denied most of the petitioners' claims, including all claims brought under the National

Historic Preservation Act, FLPMA, and the Clean Water Act, but found the 2010 BiOp and BLM ROD to be inadequate.

In a published opinion, the court vacated the 2010 BiOp and remanded the matter to the FWS. The court held that the FWS' consideration of Ruby's Endangered Species Act (ESA) Conservation Action Plan (CAP) as cumulative effects in the 2010 BiOp was arbitrary and capricious. The court also found that the 2010 BiOp did not adequately consider whether groundwater withdrawals associated with hydrostatic testing and dust abatement would impact listed fish that occur in surface waters. The court vacated the BLM's ROD because it relied on the 2010 BiOp and remanded the matter to the BLM.

In an unpublished opinion, the court found that the Final EIS for the Project did not provide sufficient quantified or detailed data about the cumulative loss of sagebrush steppe vegetation and habitat and did not provide information on how much acreage sagebrush steppe used to occupy, or what percentage has been destroyed. Thus, the court remanded the ROD to the BLM for further analysis of cumulative impacts to sagebrush steppe vegetation and habitat. The court subsequently stayed vacature of the 2010 BiOp until the FWS issued the Revised BiOp and stayed vacature of the ROD until the BLM issues a new ROD.

The 2010 BiOp found that the proposed action was not likely to jeopardize the continuing existence of any of the listed species or result in destruction or adverse modification of designated critical habitats. The findings of the Revised BiOp are consistent with those reached in the 2010 BiOp.

The FWS also affirmed the accuracy of the incidental take statement found in the 2010 BiOp and incorporated it by reference. Those conclusions were drawn without consideration of or reliance on the ESA CAP. The conservation recommendations described in the 2010 BiOp were reviewed by the FWS, were determined to stand as written, and were incorporated by reference. The court did not rule that the discussion of the conservation agreement or groundwater extraction in the Final EIS was deficient or in violation of NEPA, so these topics are not analyzed in the Supplemental EIS.

In the Final EIS, Draft Supplemental EIS, and Final Supplemental EIS, the BLM provided quantified and detailed data regarding the cumulative loss of sagebrush steppe vegetation and habitat, including information on how much acreage sagebrush steppe used to occupy, and what percentage has been lost. The Ruby Pipeline Project's direct and indirect impacts remain the same as those discussed in the Final EIS. The Final Supplemental EIS thoroughly discusses the cumulative impacts to sagebrush steppe habitat within the cumulative impact area and summarizes the substantial mitigation required by the BLM's July 12, 2010, ROD (and FERC's Certificate). The mitigation measures required by the July 12, 2010, ROD are intended to address the significant long-term impacts to sagebrush steppe habitat related to the Project. All elements of the July 12, 2010, ROD and subsequent BLM decisions remain in full force and effect, including all stipulations, monitoring, and mitigation measures. Those same stipulations, monitoring, and mitigation measures are required by this ROD. The BLM concludes that those mitigation measures are adequate and additional mitigation measures are not required.

The BLM published a *Notice of Availability of the Draft Supplemental Environmental Impact Statement for the Ruby Pipeline Project* on July 5, 2013 (78 FR 40496). The release of the Draft Supplemental EIS initiated a formal 45-day public comment period that ended on August 19, 2013.

The BLM received 31 comment submissions on the Draft Supplemental EIS from the public, agencies, tribes, organizations, and businesses during the comment period. Substantive comments were considered during preparation of this Final Supplemental EIS. Comments resulted in the addition of clarifying text, but did not significantly change the analysis or the proposed decisions.

Filing an Appeal: Instructions for filing an appeal of this Decision are described in the ROD.

Copies of the ROD and Final Supplemental EIS for the Ruby Pipeline Project are available for public inspection at the following BLM offices:

- Kemmerer Field Office, 312 Highway 189 North, Kemmerer, WY
- Salt Lake Field Office, 2370 South 2300 West, Salt Lake City, UT
- Elko District Office, 3900 East Idaho Street, Elko, NV
- Winnemucca District Office, 5100 East Winnemucca Boulevard, Winnemucca, NV
- Lakeview District Office, 1301 South G Street, Lakeview, OR
- Klamath Falls Resource Area Office, 2795 Anderson Avenue, Suite 25, Klamath Falls, OR
- Surprise Field Office, 602 Cressler Street, Cedarville, CA
- Additional locations where printed copies of the ROD/Final Supplemental EIS can be viewed can be found on the Project Web site (*http://www.blm.gov/nv/st/en/info/nepa/ruby_pipeline_project.html*) or by contacting the project manager.

Authority: 40 CFR 1502.9, 43 CFR 2880.

Marci L. Todd,

Associate State Director, Nevada.

[FR Doc. 2013–28030 Filed 11–20–13; 8:45 am]

BILLING CODE 4310–HC–P

DEPARTMENT OF THE INTERIOR

Bureau of Land Management

[LLNMA00000.L12200000.DF0000]

Notice of Public Meeting, Albuquerque District Resource Advisory Council Meeting, New Mexico

AGENCY: Bureau of Land Management, Interior.

ACTION: Notice of Public Meeting.

SUMMARY: In accordance with the Federal Land Policy and Management Act and the Federal Advisory Committee Act of 1972, the U.S. Department of the Interior, Bureau of Land Management (BLM), Albuquerque District Resource Advisory Council (RAC), will meet as indicated below.

DATES: The meeting date is on December 17, 2013, from 9 a.m.–4 p.m.

ADDRESSES: The meeting will be at the BLM Albuquerque District Office, 435 Montano Rd., Albuquerque, NM. The public may send written comments to the RAC, 435 Montano Rd., Albuquerque, NM 87107.

FOR FURTHER INFORMATION CONTACT: Chip Kimball, BLM Albuquerque District Office, 435 Montano Rd., Albuquerque, NM 87107, 505–761–8734. Persons who use a telecommunications device for the deaf (TDD) may call the Federal Information Relay Service (FIRS) at 1–800–877–8229 to contact the above individual during normal business hours. The FIRS is available 24 hours a day, 7 days a week, to leave a message or question with the above individual. You will receive a reply during normal business hours.

SUPPLEMENTARY INFORMATION: The 10-member RAC advises the Secretary of the Interior, through the BLM, on a variety of planning and management issues associated with public land management in New Mexico.

Planned agenda items include new member introductions and orientation, election of new officers, discussions on and development of subcommittees, Kasha-Katuwe Tent Rocks fee discussions, updates by the Socorro and

Rio Puerco Field Office Managers on planned pipeline and transmission line projects.

A half-hour comment period during which the public may address the RAC will begin at 11:00 a.m. All RAC meetings are open to the public. Depending on the number of individuals wishing to comment and time available, the time for individual oral comments may be limited.

Edwin Singleton,

District Manager.

[FR Doc. 2013–27922 Filed 11–20–13; 8:45 am]

BILLING CODE 4310–FB–P

DEPARTMENT OF JUSTICE

Agency Information Collection Activities; Revision of a Previously Approved Collection, With Change; Comments Requested: COPS Progress Report

Correction

In notice document 2013–25701, appearing on page 64979 in the issue of Wednesday, October 30, 2013, make the following correction:

On page 64979, in the second column, beginning on the first line, ''[insert the date 60 days from the date this notice is published in the **Federal Register**]'' should read ''December 30, 2013''.

[FR Doc. C1–2013–25701 Filed 11–20–13; 8:45 am]

BILLING CODE 1505–01–D

DEPARTMENT OF JUSTICE

Notice of Lodging of Proposed Consent Decree Under the Oil Pollution Act

On November 15, 2013, the Department of Justice lodged a proposed consent decree with the United States District Court for the District of Colorado in the lawsuit entitled *United States et al.* v. *Suncor (U.S.A.) Inc.,* Civil Action No. 1:13–cv–03109.

The United States and the State of Colorado filed this lawsuit against Suncor (U.S.A.) Inc. (''Suncor'') pursuant to the Oil Pollution Act, 33 U.S.C. 2701–2762. The United States' and Colorado's complaint seeks to recover damages for injury to, destruction of, loss of, or loss of use of natural resources resulting from the release of oil at or from the refinery Suncor owns and operates in Commerce City, Colorado. The proposed consent decree requires Suncor to pay $1,764,000 to resolve the United States' and the State of Colorado's claim for natural resource damages, in addition to a partial payment of $123,000 that Suncor has already made.

The publication of this notice opens a period for public comment on the consent decree. Comments should be addressed to the Assistant Attorney General, Environment and Natural Resources Division, and should refer to *United States et al.* v. *Suncor (U.S.A.) Inc.,* D.J. Ref. No. 90–5–1–1–10821. All comments must be submitted no later than thirty (30) days after the publication date of this notice. Comments may be submitted either by email or by mail in the following manner:

To submit comments:	*Send them to:*
By email	*pubcomment-ees.enrd@usdoj.gov.*
By mail	Assistant Attorney General, U.S. DOJ–ENRD, P.O. Box 7611, Washington, DC 20044–7611.

During the public comment period, the consent decree may be examined and downloaded at this Justice Department Web site: *http://www.usdoj.gov/enrd/Consent_Decrees.html.* We will provide a paper copy of the consent decree upon written request and payment of reproduction costs. Please mail your request and payment to: Consent Decree Library, U.S. DOJ–ENRD, P.O. Box 7611, Washington, DC 20044–7611.

Please enclose a check or money order for $7.00 (25 cents per page reproduction cost) payable to the United States Treasury.

Robert Brook,

Assistant Chief, Environmental Enforcement Section, Environment and Natural Resources Division.

[FR Doc. 2013–27929 Filed 11–20–13; 8:45 am]

BILLING CODE 4410–15–P

DEPARTMENT OF JUSTICE

Office of Justice Programs

[OMB Number 1121–0314]

Agency Information Collection Activities: Proposed Collection; Comments Requested Revision of a Previous Approved Collection: Firearm Inquiry Statistics Program

ACTION: 60-day notice of information collection under review.

The Department of Justice, Office of Justice Programs, Bureau of Justice Statistics, will be submitting the following information collection request to the Office of Management and Budget for review and approval in accordance with the Paperwork Reduction Act of 1995. The proposed information collected is published to obtain comments from the public and affected agencies. Comments are encouraged and will be accepted for ''sixty days'' until January 21, 2014. This process is conducted in accordance with 5 CFR 1320.10.

If you have comments especially the estimated public burden or associated response time, suggestions, or need a copy of the proposed information collection instrument with instructions or additional information, please contact Allina D. Lee, Justice Statistics Policy Analyst, Bureau of Justice Statistics, Office of Justice Programs, U.S. Department of Justice, 810 Seventh Street NW., Washington, DC 20531 (phone: 202–307–0765).

Written comments and suggestions from the public and affected agencies concerning the proposed collection of information are encouraged. Your comments should address one or more of the following four points:

—Evaluate whether the proposed collection of information is necessary for the proper performance of the functions of the agency, including whether the information will have practical utility;

—Evaluate the accuracy of the agency's estimate of the burden of the proposed collection of information, including the validity of the methodology and assumptions used;

—Enhance the quality, utility and clarity of the information to be collected; and

—Minimize the burden of the collection of information on those who are to respond, including through the use of appropriate automated, electronic, mechanical, or other technological collection techniques or other forms of information technology, e.g. permitting electronic submission of responses.

Overview of This Information Collection

(1) *Type of information collection:* Revision of a previously approved collection.

(2) *The title of the Form/Collection:* Firearm Inquiry Statistics (FIST) Program

(3) *Agency form number, if any, and the applicable component of the Department of Justice sponsoring the collection:* Not applicable.

(4) *Affected public who will be asked to respond, as well as a brief abstract:* Primary: State and local agencies. State and local agencies responsible for maintaining records on the number of

background checks for firearm transfers or permits that were issued, processed, tracked, or conducted during the calendar year are asked to provide information about: The number of applications and denials for firearm transfers received or tracked by the agency; reasons why an application was denied; information on arrests that occurred when a denied person who submitted a false application or had an outstanding warrant was arrested by the checking agency or another agency that was notified (state agency responders only); appeals to an agency and court for reconsideration of a denial (state agency responders only); and reversals of a denial decision (state agency responders only). Through its Firearm Inquiry Statistics Program, the Bureau of Justice Statistics collects information on firearm background checks conducted by state and local agencies and combines this information with the Federal Bureau of Investigation's National Instant Criminal Background Check System transaction data to produce a national estimate of the number of applications received and denied and of the reasons for denial. The information is also combined with data obtained from the Bureau of Alcohol, Tobacco, Firearms, and Explosives on appeals of denied applications and arrests for falsified documents. The Bureau of Justice Statistics uses this information in published reports and in responding to queries from the U.S. Congress, Executive Office of the President, state officials, researchers, students, the media, the general public, and others interested in criminal justices statistics.

(5) *An estimate of the total number of respondents and the amount of time estimated for an average respondent to respond:* 761 responses at 25 minutes each. Respondents have the option to provide responses using either paper or web-based questionnaires. The burden estimate is based on the results of the field test of the 2012 Firearm Inquiry Statistics Program survey instrument and feedback received from the 2012 data collection, as well as the Bureau of Justice Statistics' extensive history conducting the FIST data collection.

(6) *An estimate of the total public burden (in hours) associated with the collection:* There are an estimated 317 annual total burden hours associated with the collection.

If additional information is required contact: Jerri Murray, Department Clearance Officer, United States Department of Justice, Justice Management Division, Policy and Planning Staff, Two Constitution Square, 145 N Street NE., Washington, DC 20530.

Dated: November 18, 2013.

Jerri Murray,

Department Clearance Officer, PRA, U.S. Department of Justice.

[FR Doc. 2013–27963 Filed 11–20–13; 8:45 am]

BILLING CODE 4410–18–P

DEPARTMENT OF JUSTICE

Office of Justice Programs

[OJP (OJJDP) Docket No. 1639]

Meeting of the Federal Advisory Committee on Juvenile Justice

AGENCY: Office of Juvenile Justice and Delinquency Prevention, Office of Justice Programs, U.S. Department of Justice.

ACTION: Notice of meeting.

SUMMARY: The Office of Juvenile Justice and Delinquency Prevention (OJJDP) announces a meeting of the Federal Advisory Committee on Juvenile Justice (FACJJ).

DATES: *Dates and Location:* The meeting will take place on Monday, December 9, 2013 from 8:30 to 5:30 (ET), and Tuesday, December 10, 2013 from 8:30 to 1:30 p.m. (ET). The meeting will take place in the third floor main conference room at the U.S. Department of Justice, Office of Justice Programs, 810 7th St. NW., Washington, DC 20531.

FOR FURTHER INFORMATION CONTACT: Kathi Grasso, Designated Federal Official, OJJDP, *Kathi.Grasso@usdoj.gov,* or (202) 616–7567. [This is not a toll-free number.]

SUPPLEMENTARY INFORMATION: The Federal Advisory Committee on Juvenile Justice (FACJJ), established pursuant to Section 3(2)A of the Federal Advisory Committee Act (5 U.S.C. App. 2), will meet to carry out its advisory functions under Section 223(f)(2)(C–E) of the Juvenile Justice and Delinquency Prevention Act of 2002. The FACJJ is composed of representatives from the states and territories. FACJJ member duties include: Reviewing Federal policies regarding juvenile justice and delinquency prevention; advising the OJJDP Administrator with respect to particular functions and aspects of OJJDP; and advising the President and Congress with regard to State perspectives on the operation of OJJDP and Federal legislation pertaining to juvenile justice and delinquency prevention. More information on the FACJJ may be found at *www.facjj.org.*

Meeting Agenda: The proposed agenda will include: (a) Welcome and introductions; (b) remarks from OJJDP senior leadership; (c) presentation on subcommittee reports, including draft recommendations; (d) final consideration by full Committee of draft FACJJ subcommittee recommendations; (e) vote on recommendations by FACJJ; (f) presentations on OJJDP initiatives of interest to FACJJ members; (g) other business; and (f) adjournment.

To observe this meeting, members of the public must pre-register online. Interested persons must link to the registration portal through *www.facjj.org,* no later than Wednesday, December 4, 2013. Note: Members of the public will be able to observe portions of the FACJJ meeting open to the public, but will not be able to actively participate. Subcommittee breakout sessions (which most likely will be held in the first hour of the meeting) to conduct internal FACJJ business will be closed to the general public.

Written Comments: Interested parties may submit written comments in advance to Kathi Grasso, Designated Federal Official, by email to *Kathi.Grasso@usdoj.gov,* no later than Wednesday, December 4, 2013. You can also call Joyce Mosso Stokes at 202–305–4445 to ensure that they are received. [This is a not a toll-free number.]

Robert L. Listenbee,

Administrator, Office of Juvenile Justice and Delinquency Prevention.

[FR Doc. 2013–27948 Filed 11–20–13; 8:45 am]

BILLING CODE 4410–18–P

DEPARTMENT OF JUSTICE

Office of Justice Programs

[OJP (OJJDP) Docket No. 1635]

Hearing of the Advisory Committee of the Attorney General's Task Force on American Indian/Alaska Native Children Exposed to Violence

AGENCY: Office of Juvenile Justice and Delinquency Prevention (OJJDP), Justice.

ACTION: Notice of hearing.

SUMMARY: This is an announcement of the first hearing of the Advisory Committee of the Attorney General's Task Force on American Indian/Alaska Native Children Exposed to Violence (hereafter referred to as the AIAN Advisory Committee). The AIAN Advisory Committee is chartered to provide the Attorney General with valuable advice in the areas of American Indian/Alaska Native children's exposure to violence for the purpose of

addressing the epidemic levels of exposure to violence faced by tribal youth. Based on the testimony at four public hearings, on comprehensive research, and on extensive input from experts, advocates, and impacted families and tribal communities nationwide, the AIAN Advisory Committee will issue a final report to the Attorney General presenting its findings and comprehensive policy recommendations in the fall of 2014.

DATES: This first hearing will take place on Monday, December 9, 2013, at 8:30 a.m., (full-day session) and Tuesday, December 10, 2013, at 8:30 a.m. (morning session only).

ADDRESSES: The hearing will take place at the Best Western Ramkota Hotel, 800 South 3rd Street, Bismarck, ND 58504.

FOR FURTHER INFORMATION CONTACT: Jim Antal, AIAN Advisory Committee Designated Federal Officer (DFO) and Deputy Associate Administrator, Youth Development, Prevention and Safety Division, Office of Juvenile Justice & Delinquency Prevention, Office of Justice Programs, 810 7th Street NW., Washington, DC 20531. Phone: (202) 514–1289 [note: this is not a toll-free number]; email: *james.antal@usdoj.gov.*

SUPPLEMENTARY INFORMATION: This hearing is being convened to provide information to the AIAN Advisory Committee about the issue of American Indian/Alaska Native children's exposure to violence in the home. The focus for this first hearing will be on issues of domestic violence, and child physical and sexual abuse. The final agenda is subject to adjustment, but it is anticipated that on December 9, 2013, there will be a morning and afternoon session, with a break for lunch. The morning session will likely include welcoming remarks and introductions, and panel presentations from invited guests on the impact of American Indian/Alaska Native children's exposure to violence in the home. The afternoon session will likely include presentations from experts invited to brief the AIAN Advisory Committee on measuring and describing American Indian/Alaska Native children's exposure to violence, and existing programs that attempt to address this issue. There will also be opportunities for public comment to occur in the afternoon on December 9th. On December 10th, there will be a morning session that will include a review of material presented during the previous day and planning for subsequent hearings. This meeting is open to the public. Members of the public who wish to attend this meeting must provide photo identification upon entering the hearing facility. Those wishing to provide public testimony during the hearings should register through the registration link at *www.justice.gov/defendingchildhood* at least seven (7) days in advance of the meeting. Registrations will be accepted on a space available basis. Testimony will not be allowed without prior registration. Please bring photo identification and allow extra time prior to the meeting for your arrival. Persons interested in providing written testimony to the AIAN Advisory Committee should submit their written comments to the DFO at least seven (7) days prior to the hearing at *james.antal@usdoj.gov.*

Anyone requiring special accommodations should notify Mr. Antal at least seven (7) days in advance of the meeting.

Jim Antal,

Deputy Associate Administrator, Youth Development, Prevention and Safety Division and AI/AN Advisory Committee Designated Federal Officer, Office of Juvenile Justice and Delinquency Prevention, Office of Justice Programs.

[FR Doc. 2013–27875 Filed 11–20–13; 8:45 am]

BILLING CODE 4410–18–P

DEPARTMENT OF LABOR

Office of the Secretary

Agency Information Collection Activities; Submission for OMB Review; Comment Request; Hazardous Conditions Complaints

ACTION: Notice.

SUMMARY: The Department of Labor (DOL) is submitting the Mine Safety and Health Administration (MSHA) sponsored information collection request (ICR) titled, ''Hazardous Conditions Complaints,'' to the Office of Management and Budget (OMB) for review and approval for continued use, without change, in accordance with the Paperwork Reduction Act of 1995 (PRA), 44 U.S.C. 3501 et seq.

DATES: Submit comments on or before December 23, 2013.

ADDRESSES: A copy of this ICR with applicable supporting documentation; including a description of the likely respondents, proposed frequency of response, and estimated total burden may be obtained free of charge from the RegInfo.gov Web site at *http://www.reginfo.gov/public/do/PRAViewICR?ref_nbr=201309-1219-001* (this link will only become active on the day following publication of this notice) or by contacting Michel Smyth by telephone at 202–693–4129 (this is not a toll-free number) or sending an email to *DOL_PRA_PUBLIC@dol.gov.*

Submit comments about this request by mail or courier to the Office of Information and Regulatory Affairs, Attn: OMB Desk Officer for DOL–MSHA, Office of Management and Budget, Room 10235, 725 17th Street NW., Washington, DC 20503; by Fax: 202–395–6881 (this is not a toll-free number); or by email: *OIRA_submission@omb.eop.gov.* Commenters are encouraged, but not required, to send a courtesy copy of any comments by mail or courier to the U.S. Department of Labor—OASAM, Office of the Chief Information Officer, Attn: Information Policy and Assessment Program, Room N1301, 200 Constitution Avenue NW., Washington, DC 20210; or by email: *DOL_PRA_PUBLIC@dol.gov.*

FOR FURTHER INFORMATION CONTACT: Michel Smyth by telephone at 202–693–4129 (this is not a toll-free number) or by email at *DOL_PRA_PUBLIC@dol.gov.*

Authority: 44 U.S.C. 3507(a)(1)(D).

SUPPLEMENTARY INFORMATION: The ICR seeks to maintain PRA authorization for the MSHA hazardous conditions complaint information collection. Federal Mine Safety and Health Act of 1977, as amended (Mine Act) section 103(g)—30 U.S.C. 813(g)—provides that a representative of miners, or any individual miner where there is no representative of miners, may submit to the MSHA a written or oral notification of an alleged Mine Act or mandatory health or safety standard violation or of an imminent danger. The person making the notification also has the right to obtain an immediate MSHA inspection. A copy of the notice must be provided to the operator, with individual miner names redacted. Regulations 30 CFR part 43 implements Mine Act section 103(g). These regulations provide the procedures for submitting a complaint and the actions the MSHA must take after receiving the notice.

This information collection is subject to the PRA. A Federal agency generally cannot conduct or sponsor a collection of information, and the public is generally not required to respond to an information collection, unless it is approved by the OMB under the PRA and displays a currently valid OMB Control Number. In addition, notwithstanding any other provisions of law, no person shall generally be subject to penalty for failing to comply with a collection of information that does not display a valid Control Number. *See* 5 CFR 1320.5(a) and 1320.6. The DOL obtains OMB approval for this

information collection under Control Number 1219–0014.

OMB authorization for an ICR cannot be for more than three (3) years without renewal, and the current approval for this collection is scheduled to expire on January 31, 2014. The DOL seeks to extend PRA authorization for this information collection for three (3) more years, without any change to existing requirements. The DOL also notes that existing information collection requirements submitted to the OMB receive a month-to-month extension while they undergo review. For additional substantive information about this ICR, see the related notice published in the **Federal Register** on August 21, 2013 (78 FR 51748).

Interested parties are encouraged to send comments to the OMB, Office of Information and Regulatory Affairs at the address shown in the **ADDRESSES** section within 30 days of publication of this notice in the **Federal Register**. In order to help ensure appropriate consideration, comments should mention OMB Control Number 1219–0014. The OMB is particularly interested in comments that:

- Evaluate whether the proposed collection of information is necessary for the proper performance of the functions of the agency, including whether the information will have practical utility;
- Evaluate the accuracy of the agency's estimate of the burden of the proposed collection of information, including the validity of the methodology and assumptions used;
- Enhance the quality, utility, and clarity of the information to be collected; and
- Minimize the burden of the collection of information on those who are to respond, including through the use of appropriate automated, electronic, mechanical, or other technological collection techniques or other forms of information technology, e.g., permitting electronic submission of responses.

Agency: DOL–MSHA.

Title of Collection: Hazardous Conditions Complaints.

OMB Control Number: 1219–0014.

Affected Public: Individuals or households and private sector—not-for-profit institutions.

Total Estimated Number of Respondents: 2,431.

Total Estimated Number of Responses: 2,431.

Total Estimated Annual Burden Hours: 486.

Total Estimated Annual Other Costs Burden: $0.

Dated: November 14, 2013.

Michel Smyth,

Departmental Clearance Officer.

[FR Doc. 2013–27940 Filed 11–20–13; 8:45 am]

BILLING CODE 4510–43–P

DEPARTMENT OF LABOR

Employment and Training Administration

[TA–W–82,455; TA–W–82,455A; TA–W–82,455B; TA–W–82,455C; TA–W–82,455D]

First Advantage Corporation, Including On-Site Leased Workers From Tapfin, Staffworks, Aerotek Professional Services, Randstad, Insight Global, LLC and RemX Specialty Staffing, St. Petersburg, Florida; First Advantage Corporation, Charlotte, North Carolina, First Advantage Corporation, Bolingbrook, Illinois; First Advantage Corporation, Dallas, Texas; First Advantage Corporation, Alpharetta, Georgia; Amended Certification Regarding Eligibility To Apply for Worker Adjustment Assistance

In accordance with Section 223 of the Trade Act of 1974, as amended (''Act''), 19 U.S.C. 2273, the Department of Labor issued a Certification of Eligibility to Apply for Worker Adjustment Assistance on May 9, 2013, applicable to workers of First Advantage Corporation, St. Petersburg, Florida. The Department's notice of determination was published in the **Federal Register** on May 30, 2013 (78 FR 32464).

At the request of a company official, the Department reviewed the certification for workers of the subject firm. The workers are engaged in talent acquisition services.

The company official reports that workers in Charlotte, North Carolina; Bolingbrook, Illinois; Dallas, Texas; and Alpharetta, Georgia have been separated or are threatened with separation due to the same shift of services to a foreign country that has contributed importantly to separations in St. Petersburg, Florida. The worker group includes workers tele-working from their homes reporting to these locations.

The amended notice applicable to TA–W–82,455 is hereby issued as follows:

All workers of First Advantage Corporation, including on-site leased workers from Tapfin, Staffworks, Aerotek Professional Services, Randstad, Insight Global, LLC, and RemX Specialty Staffing, St. Petersburg, Florida (TA–W–82,455), Charlotte, North Carolina (TA–W–82,455A), Bolingbrook, Illinois (TA–W–82,455B), Dallas, Texas (TA–W–82,455C), and Alpharetta, Georgia (TA–W–82,455D), who became totally or partially separated from employment on or after February 11, 2012 through May 9, 2015, and all workers in the group threatened with total or partial separation from employment on the date of certification through May 9, 2015 are eligible to apply for adjustment assistance under Chapter 2 of Title II of the Trade Act of 1974, as amended.

Signed in Washington, DC, this 5th day of November 2013.

Michael W. Jaffe,

Certifying Officer, Office of Trade Adjustment Assistance.

[FR Doc. 2013–27935 Filed 11–20–13; 8:45 am]

BILLING CODE 4510–FN–P

DEPARTMENT OF LABOR

Employment and Training Administration

[TA–W–82,697]

AT&T Corporation, a Subsidiary of AT&T Inc., Business Billing Customer Care, Pittsburgh, Pennsylvania; Notice of Affirmative Determination Regarding Application for Reconsideration

By application dated July 8, 2013, the Communication Workers of America Union, Local 13550, requested administrative reconsideration of the negative determination regarding workers' eligibility to apply for Trade Adjustment Assistance (TAA) applicable to workers and former workers of AT&T Corporation, a subsidiary of AT&T Inc., Business Billing Customer Care, Pittsburgh, Pennsylvania (subject firm). The determination was issued on June 6, 2013. The Department's Notice of determination was published in the **Federal Register** on July 2, 2013 (78 FR 39776). Workers at the subject firm were engaged in activities related to the supply of billing inquiry and billing dispute resolution services.

The negative determination was based on the Department's findings, with respect to Section 222(a)(2)(A)(ii) of the Trade Act of 1974, as amended (the Act), of no increased imports, during the relevant period, of services like or directly competitive with those supplied by the subject workers.

With respect to Section 222(a)(2)(B) of the Act, the initial investigation revealed that the subject firm has not shifted the supply of services like or directly competitive with the billing inquiry and billing dispute resolution services supplied by the workers to a foreign country or acquired the supply of like or directly competitive services from a foreign country.

Rather, the initial investigation confirmed that the worker separations

are attributable to a shift of the services supplied by Business Billing Customer Care to other locations within the United States.

With respect to Section 222(b)(2) of the Act, the initial investigation revealed that the subject firm is not a Supplier to, or act as a Downstream Producer to, a firm that employed a group of workers who received a certification of eligibility under Section 222(a) of the Act, 19 U.S.C. 2272(a).

Finally, the initial investigation revealed that the group eligibility requirements under Section 222(e) of the Act have not been satisfied because the workers' firm has not been publicly identified by name by the International Trade Commission as a member of a domestic industry in an investigation resulting in an affirmative finding of serious injury, market disruption, or material injury, or threat thereof.

The request for reconsideration alleges that the subject firm has shifted billing services, ordering services, and/or customer support services to Slovakia, Mexico, India, and/or the Philippines. The petitioner also supplied additional information in regard to employment figures at the aforementioned locations.

The Department has carefully reviewed the request for reconsideration and the existing record, and will conduct further investigation to determine if the workers meet the eligibility requirements of the Trade Act of 1974, as amended.

Conclusion

After careful review of the application, I conclude that the claim is of sufficient weight to justify reconsideration of the U.S. Department of Labor's prior decision. The application is, therefore, granted.

Signed at Washington, DC, this 23rd day of October, 2013.

Del Min Amy Chen,

Certifying Officer, Office of Trade Adjustment Assistance.

[FR Doc. 2013–27934 Filed 11–20–13; 8:45 am]

BILLING CODE 4510–FN–P

DEPARTMENT OF LABOR

Employment and Training Administration

Notice of Availability of Funds and Solicitation for Grant Applications for the Youth CareerConnect Program

AGENCY: Employment and Training Administration, Labor.

ACTION: Notice of solicitation for grant applications.

Funding Opportunity Number: SGA/DFA PY–13–01.

SUMMARY: The Employment and Training Administration (ETA), U.S. Department of Labor (DOL), announces the availability of approximately $100 million in grant funds, authorized under Section 414(c) of the American Competitiveness and Workforce Improvement Act of 1998 (ACWIA), as amended (codified at 29 U.S.C. 2916a), for the *Youth CareerConnect* grant program. The program is designed to provide high school students with education and training that combines rigorous academic and technical curricula focused on specific in-demand occupations and industries for which employers are using H–1B visas to hire foreign workers as well as the related activities necessary to support such training to increase participants' employability in H–1B in-demand industries and occupations. Furthermore, given the large number of H–1B visas in science, technology, engineering and math (STEM) industries, pending high quality proposals, DOL expects a large share of the grants to support education and training in STEM industries. The ultimate goals for the program are to ensure that participants gain academic and occupational skills by completing the program and graduating from high school; move into a positive placement following high school that includes unsubsidized employment, post-secondary education, long-term occupational skills training, or Registered Apprenticeship; obtain an industry-recognized credential in an H–1B industry or occupation for those industries where credential attainment is feasible by program completion, in addition to a high school diploma; and earn post-secondary credit towards a degree or credit-bearing certificate issued by an institution of higher education.

As stated under Section 414(c) of ACWIA, grants under this SGA will be awarded to partnerships of public and private sector entities. Approximately $100 million is expected to be available to fund approximately 25 to 40 grants. DOL intends to fund grants ranging from $2 million to $7 million. Grants can be used to fund programs in a single site or to fund multi-site programs.

The complete SGA and any subsequent SGA amendments in connection with this solicitation are described in further detail on ETA's Web site at *http://www.doleta.gov/grants/* or on *http://www.grants.gov.* The Web sites provide application information, eligibility requirements, review and selection procedures, and other program requirements governing this solicitation.

DATES: The closing date for receipt of applications under this announcement is January 27, 2014. Applications must be received no later than 4:00:00 p.m. Eastern Time.

FOR FURTHER INFORMATION CONTACT: Ariam Ferro, 200 Constitution Avenue NW., Room N–4716, Washington, DC 20210; Telephone: 202–693–3968.

Signed November 18, 2013 in Washington, DC by

Eric D. Luetkenhaus,

Grant Officer, Employment and Training Administration.

[FR Doc. 2013–28044 Filed 11–20–13; 8:45 am]

BILLING CODE 4510–FN–P

DEPARTMENT OF LABOR

Employment and Training Administration

Workforce Investment Act: Native American Employment and Training Council

AGENCY: Employment and Training Administration, U.S. Department of Labor.

ACTION: Notice of Meeting.

SUMMARY: Pursuant to Section 10(a)(2) of the Federal Advisory Committee Act (FACA) (Pub. L. 92–463), as amended, and Section 166(h)(4) of the Workforce Investment Act (WIA) [29 U.S.C. 2911(h)(4)], notice is hereby given of the next meeting of the Native American Employment and Training Council (Council), as constituted under WIA.

DATES: The meeting will begin at 9:00 a.m. (Eastern Time) on Tuesday, December 10, 2013, and continue until 5:00 p.m. that day. The meeting will reconvene at 8:30 a.m. on Wednesday, December 11, 2013, and adjourn at 4:30 p.m. that day. The period from 2:00 p.m. to 4:00 p.m. on December 11, 2013, will be reserved for participation and presentations by members of the public. The meeting will reconvene at 9:00 a.m. on Thursday, December 12, 2013, and adjourn at 12:00 p.m. that day.

ADDRESSES: The meeting will be held at the U.S. Department of Labor, Francis Perkins Building, 200 Constitution Avenue, Northwest, Room 5515, Room 1, Washington, DC 20210.

SUPPLEMENTARY INFORMATION: The meeting is open to the public. Members of the public interested in providing comment can also call 888–396–9185, participant passcode: 8137947 on December 11, 2013 from 2:00 p.m. through 4:00 p.m. (Eastern Time).

Members of the public not present may submit a written statement on or before December 6, 2013, to be included in the record of the meeting. Submit written statements to Mrs. Evangeline M. Campbell, Designated Federal Official (DFO), U.S. Department of Labor, 200 Constitution Avenue, Northwest, Room S–4209, Washington, DC 20210. Persons who need special accommodations should contact Mr. Craig Lewis at (202) 693–3384, at least two business days before the meeting. The formal agenda will focus on the following topics: (1) Program Year 2013 and 2014 Strategic Plan; (2) U.S. Department of Labor (DOL), Employment and Training Administration Update; (3) Training and Technical Assistance; (4) Statement of Urgency White Paper on Our Story Projects; and (5) Council Update and Recommendations.

FOR FURTHER INFORMATION CONTACT: Mrs. Evangeline M. Campbell, DFO, Division of Indian and Native American Programs, Employment and Training Administration, U.S. Department of Labor, Room S–4209, 200 Constitution Avenue, Northwest, Washington, DC 20210. Telephone number (202) 693–3737 (VOICE) (this is not a toll-free number).

Signed at Washington, DC, this 8th day of November 2013.

Eric M. Seleznow,

Acting Assistant Secretary, Employment and Training Administration.

[FR Doc. 2013–27943 Filed 11–20–13; 8:45 am]

BILLING CODE 4501–FR–P

DEPARTMENT OF LABOR

Employment and Training Administration

Notice of Determinations Regarding Eligibility To Apply for Worker Adjustment Assistance

In accordance with Section 223 of the Trade Act of 1974, as amended (19 U.S.C. 2273) the Department of Labor herein presents summaries of determinations regarding eligibility to apply for trade adjustment assistance for workers by (TA–W) number issued during the period of October 21, 2013 through November 1, 2013.

In order for an affirmative determination to be made for workers of a primary firm and a certification issued regarding eligibility to apply for worker adjustment assistance, each of the group eligibility requirements of Section 222(a) of the Act must be met.

I. Under Section 222(a)(2)(A), the following must be satisfied:

(1) A significant number or proportion of the workers in such workers' firm have become totally or partially separated, or are threatened to become totally or partially separated;

(2) the sales or production, or both, of such firm have decreased absolutely; and

(3) One of the following must be satisfied:

(A) Imports of articles or services like or directly competitive with articles produced or services supplied by such firm have increased;

(B) imports of articles like or directly competitive with articles into which one or more component parts produced by such firm are directly incorporated, have increased;

(C) imports of articles directly incorporating one or more component parts produced outside the United States that are like or directly competitive with imports of articles incorporating one or more component parts produced by such firm have increased;

(D) imports of articles like or directly competitive with articles which are produced directly using services supplied by such firm, have increased; and

(4) the increase in imports contributed importantly to such workers' separation or threat of separation and to the decline in the sales or production of such firm; or

II. Section 222(a)(2)(B) all of the following must be satisfied:

(1) A Significant number or proportion of the workers in such workers' firm have become totally or partially separated, or are threatened to become totally or partially separated;

(2) One of the following must be satisfied:

(A) There has been a shift by the workers' firm to a foreign country in the production of articles or supply of services like or directly competitive with those produced/supplied by the workers' firm;

(B) there has been an acquisition from a foreign country by the workers' firm of articles/services that are like or directly competitive with those produced/supplied by the workers' firm; and

(3) The shift/acquisition contributed importantly to the workers' separation or threat of separation.

In order for an affirmative determination to be made for adversely affected workers in public agencies and a certification issued regarding eligibility to apply for worker adjustment assistance, each of the group eligibility requirements of Section 222(b) of the Act must be met.

(1) A significant number or proportion of the workers in the public agency have become totally or partially separated, or are threatened to become totally or partially separated;

(2) the public agency has acquired from a foreign country services like or directly competitive with services which are supplied by such agency; and

(3) the acquisition of services contributed importantly to such workers' separation or threat of separation.

In order for an affirmative determination to be made for adversely affected secondary workers of a firm and a certification issued regarding eligibility to apply for worker adjustment assistance, each of the group eligibility requirements of Section 222(c) of the Act must be met.

(1) a significant number or proportion of the workers in the workers' firm have become totally or partially separated, or are threatened to become totally or partially separated;

(2) the workers' firm is a Supplier or Downstream Producer to a firm that employed a group of workers who received a certification of eligibility under Section 222(a) of the Act, and such supply or production is related to the article or service that was the basis for such certification; and

(3) either—

(A) the workers' firm is a supplier and the component parts it supplied to the firm described in paragraph (2) accounted for at least 20 percent of the production or sales of the workers' firm; or

(B) a loss of business by the workers' firm with the firm described in paragraph (2) contributed importantly to the workers' separation or threat of separation.

In order for an affirmative determination to be made for adversely affected workers in firms identified by the International Trade Commission and a certification issued regarding eligibility to apply for worker adjustment assistance, each of the group eligibility requirements of Section 222(f) of the Act must be met.

(1) the workers' firm is publicly identified by name by the International Trade Commission as a member of a domestic industry in an investigation resulting in—

(A) an affirmative determination of serious injury or threat thereof under section 202(b)(1);

(B) an affirmative determination of market disruption or threat thereof under section 421(b)(1); or

(C) an affirmative final determination of material injury or threat thereof under section 705(b)(1)(A) or 735(b)(1)(A) of

the Tariff Act of 1930 (19 U.S.C. 1671d(b)(1)(A) and 1673d(b)(1)(A));

(2) the petition is filed during the 1-year period beginning on the date on which—

(A) a summary of the report submitted to the President by the International Trade Commission under section 202(f)(1) with respect to the affirmative determination described in paragraph (1)(A) is published in the **Federal Register** under section 202(f)(3); or

(B) notice of an affirmative determination described in subparagraph (1) is published in the **Federal Register**; and

(3) the workers have become totally or partially separated from the workers' firm within—

(A) the 1-year period described in paragraph (2); or

(B) notwithstanding section 223(b)(1), the 1-year period preceding the 1-year period described in paragraph (2).

Affirmative Determinations for Worker Adjustment Assistance

The following certifications have been issued. The date following the company name and location of each determination references the impact date for all workers of such determination.

The following certifications have been issued. The requirements of Section 222(a)(2)(A) (increased imports) of the Trade Act have been met.

TA–W No.	Subject firm	Location	Impact date
82,729	Panduit Corporation, Aerotek	Lockport, IL	May 13, 2012.
82,880	DAK Americas LLC, Mundy Maintenance, Services and Operations, LLC, Clearwater Loaders, etc.	Leland, NC	July 5, 2012.
82,994	Liberty Tire Services of Ohio, LLC, Liberty Tire Recycling Holdco, LLC	Braddock, PA	August 14, 2012.

The following certifications have been issued. The requirements of Section 222(a)(2)(B) (shift in production or services) of the Trade Act have been met.

TA–W No.	Subject firm	Location	Impact date
82,689	Emcore Corporation, Emcore Photovoltaic Division	Albuquerque, NM	April 23, 2012.
82,824	OneWest Bank, OneWest Resources, LLC, Cognizant, Legal People, etc	Austin, TX	June 18, 2012.
82,883	NCR	Duluth, GA	July 8, 2012.
82,900	Honeywell International, Inc., Aerospace Order Management Division, Tapfin-Manpower Group Solutions.	Phoenix, AZ	July 11, 2012.
82,900A	Honeywell International, Inc., Aerospace Order Management Division, Tapfin-Manpower Group Solutions.	Tempe, AZ	July 11, 2012.
82,900B	Honeywell International, Inc., Aerospace Order Management Division, Tapfin-Manpower Group Solutions.	Tulsa, OK	July 11, 2012.
82,967	Johnson Controls, Inc., Building Efficiency Div., Staffmark and Express Employment Professionals.	Erlanger, KY	July 21, 2012.
82,993	Welch Allyn, Kelly Services	Beaverton, OR	August 14, 2012.
82,993A	Welch Allyn, Manufacturing Division, Kelly Services	Skaneateles, NY	August 14, 2012.
83,008	Quest Diagnostics, IT Infrastructure and IT Applications Support, TATA America Int'l, etc.	Addison, TX	August 20, 2012.
83,008A	Quest Diagnostics, IT Infrastructure	Alameda, CA	August 20, 2012.
83,008AA	Quest Diagnostics, IT Infrastructure and IT Applications Support, HCL Technologies and Judge.	Las Vegas, NV	August 20, 2012.
83,008B	Quest Diagnostics, IT Infrastructure and IT Applications Support, Judge Technical Services.	Cypress, CA	August 20, 2012.
83,008BB	Quest Diagnostics, IT Infrastructure and IT Applications Support, HCL America, etc.	Lyndhurst, NJ	August 20, 2012.
83,008C	Quest Diagnostics, IT Applications Support, Henry Elliott & Company, Inc.	Northridge, CA	August 20, 2012.
83,008CC	Quest Diagnostics, IT Infrastructure	Teterboro, NJ	August 20, 2012.
83,008D	Quest Diagnostics, IT Applications Support	Sacramento, CA	August 20, 2012.
83,008DD	Quest Diagnostics, IT Infrastructure	Cincinnati, OH	August 20, 2012.
83,008E	Quest Diagnostics, IT Applications Support, HCL America, Iconma LLC, Idea Solutions, etc.	San Clemente, CA	August 20, 2012.
83,008EE	Quest Diagnostics, IT Infrastructure	Mason, OH	August 20, 2012.
83,008F	Quest Diagnostics, IT Infrastructure and IT Applications Support, Iconma LLC, Judge Technical.	San Juan Capistrano, CA	August 20, 2012.
83,008FF	Quest Diagnostics, IT Applications Support	Portland, OR	August 20, 2012.
83,008G	Quest Diagnostics, IT Applications Support, Iconma LLC	South San Francisco, CA	August 20, 2012.
83,008GG	Quest Diagnostics, IT Applications Support, Judge Technical Services	Chesterbrook, PA	August 20, 2012.
83,008H	Quest Diagnostics, IT Infrastructure and IT Applications Support, HCL America, etc.	Valencia, CA	August 20, 2012.
83,008HH	Quest Diagnostics, IT Applications Support, TATA America Int'l Corporation.	Collegeville, PA	August 20, 2012.
83,008I	Quest Diagnostics, IT Infrastructure and IT Applications Support	West Hills, CA	August 20, 2012.
83,008II	Quest Diagnostics, IT Infrastructure and IT Applications Support, HCL America, etc.	Norristown, PA	August 20, 2012.
83,008J	Quest Diagnostics, IT Applications Support, TATA America Int'l Corporation.	Wallingford, CT	August 20, 2012.
83,008JJ	Quest Diagnostics, IT Infrastructure and IT Applications Support, Henry Elliott & Company, etc.	Pittsburgh, PA	August 20, 2012.

TA–W No.	Subject firm	Location	Impact date
83,008K	Quest Diagnostics, IT Applications Support, Judge Technical Services	Denver, CO	August 20, 2012.
83,008KK	Quest Diagnostics, IT Infrastructure and IT Applications Support	West Norriton, PA	August 20, 2012.
83,008L	Quest Diagnostics, IT Infrastructure	Deerfield Beach, FL	August 20, 2012.
83,008LL	Quest Diagnostics, IT Applications Support, TATA America Int'l Corporation.	Cranston, RI	August 20, 2012.
83,008M	Quest Diagnostics, IT Infrastructure	Orlando, FL	August 20, 2012.
83,008MM	Quest Diagnostics, IT Applications Support	Columbia, SC	August 20, 2012.
83,008N	Quest Diagnostics, IT Infrastructure	Tampa, FL	August 20, 2012.
83,008NN	Quest Diagnostics, IT Infrastructure	Lebanon, TN	August 20, 2012.
83,008O	Quest Diagnostics, IT Infrastructure	Tampa, FL	August 20, 2012.
83,008OO	Quest Diagnostics, IT Infrastructure and IT Applications Support, Judge Technical Services.	Dallas, TX	August 20, 2012.
83,008P	Quest Diagnostics, IT Infrastructure	Tampa, FL	August 20, 2012.
83,008PP	Quest Diagnostics, IT Infrastructure	Chantilly, VA	August 20, 2012.
83,008Q	Quest Diagnostics, IT Infrastructure, CGI Technologies and Solutions, Inc.	Venice, FL	August 20, 2012.
83,008QQ	Quest Diagnostics, IT Applications Support	Vancouver, WA	August 20, 2012.
83,008R	Quest Diagnostics, IT Infrastructure	Tucker, GA	August 20, 2012.
83,008S	Quest Diagnostics, IT Infrastructure	Schaumburg, IL	August 20, 2012.
83,008T	Quest Diagnostics, IT Infrastructure and IT Applications Support, Insight Global, Inc.	Lenexa, KS	August 20, 2012.
83,008U	Quest Diagnostics, IT Infrastructure	Baltimore, MD	August 20, 2012.
83,008V	Quest Diagnostics, IT Infrastructure	Cambridge, MA	August 20, 2012.
83,008W	Quest Diagnostics, IT Applications Support, Compass Systems & Programming, etc.	Worcester, MA	August 20, 2012.
83,008X	Quest Diagnostics, IT Applications Support, TATA America Int'l Corporation.	Auburn Hills, MI	August 20, 2012.
83,008Y	Quest Diagnostics, IT Infrastructure and IT Applications Support	St. Louis, MO	August 20, 2012.
83,008Z	Quest Diagnostics, IT Applications Support	Lincoln, NE	August 20, 2012.
83,023	Lumenis, Inc., Lumenis, Ltd	Salt Lake City, UT	August 21, 2012.
83,029	Psion Corporation, Motorola Solutions, Inc., Repair and Refurbishment, Finance Dept..	Hebron, KY	August 12, 2012.
83,032	Hireright, Inc., International Background Checks Division, Altegrity	Irvine, CA	August 27, 2012.
83,060	Lonza Biologics, Inc., Lonza Group, Ltd., Aerotek and Suburban Group	Hopkinton, MA	September 1, 2012.
83,063	Henkel Corporation, Henkel of America, Inc., Customer Service Group, Agile1.	Rocky Hill, CT	September 6, 2012.
83,065	Imation Corporation	Oakdale, MN	September 6, 2012.
83,065A	Imation Corporation	Campbell, CA	September 6, 2012.
83,065B	Imation Corporation	Thousand Oaks, CA	September 6, 2012.
83,065C	Imation Corporation	Escondido, CA	September 6, 2012.
83,066	PCC Airfoils, LLC, Precision Castparts Corporation, Randstad	Minerva, OH	September 5, 2012.
83,066A	PCC Airfoils, LLC, Precision Castparts Corporation, Randstad	Crooksville, OH	September 5, 2012.
83,068	FLSmidth Salt Lake City, Inc., Finance Services Division	Midvale, UT	September 5, 2012.
83,069	FLSmidth Spokane, Inc., Financial Services Division, Volt Management Corporation.	Spokane, WA	September 5, 2012.
83,077	Mitel Delaware, Inc., Technical Support Department, Mitel Networks Corporation.	Mesa, AZ	September 12, 2012.
83,079	TTelectronics/BiTechnologies, Ghro, Kelly Services, Pathway (Presviously "MJO") and Spherion.	Fullerton, CA	September 12, 2012.
83,086	PI. U.S. Holding Inc., Workers Reporting Wages under Rheem Sales Company and Rheem, etc.	Fort Smith, AR	August 5, 2013.
83,087	Schweitzer-Mauduit International, Gallman Personnel Services of the Midlands and J&J Services.	Newberry, SC	September 16, 2012.
83,091	Gits Manufacturing Company, LLC, Creston Plant Division, Actuant Corp., Advance Services, etc.	Creston, IA	September 16, 2012.
83,094	Caterpillar Reman Powertrain Services, Inc., Caterplillar, Inc., Accountemps, Aerotek, Phillips Staffing, etc.	Summerville, SC	September 17, 2012.
83,101	InterMetro Industries Corporation, Fostoria, Ohio Facility Division, Emerson.	Fostoria, OH	December 16, 2013.
83,110	TK Holding, Inc., Finance Department	San Antonio, TX	August 30, 2012.
83,110A	TK Holding, Inc., Finance Department	Greensboro, NC	August 30, 2012.
83,119	Times Fiber Communications, Amphenol	Chatham, VA	April 26, 2013.
83,126	Abbott Laboratories, Abbott Vascular Division, TapFin	Temecula, CA	September 27, 2012.
83,127	Robert Bosch Tool Corporation, Measuring Tools, Power Tools North America Division, Manpower.	Watseka, IL	September 27, 2012.
83,134	Hoover Universal, Inc., Johnson Controls, Inc., Automotive Experience Div., Finished Goods, Elwood.	El Paso, TX	October 10, 2012.
83,138	Cummins Filtration, Cummins Inc., Manpower	Lake Mills, IA	October 20, 2013.
83,138A	Leased Workers from Whelan Security, Cummins Filtration	Lake Mills, IA	September 30, 2012.
83,147	Warren Corporation, Loro Piana S.P.A., Textile Division	Stafford Springs, CT	December 15, 2013

The following certifications have been issued. The requirements of Section 222(c) (supplier to a firm whose workers are certified eligible to apply for TAA) of the Trade Act have been met.

TA–W No.	Subject firm	Location	Impact date
82,870	Keystone Printed Specialties	Old Forge, PA	July 1, 2012.

Negative Determinations for Worker Adjustment Assistance

In the following cases, the investigation revealed that the eligibility criteria for worker adjustment assistance have not been met for the reasons specified.

The investigation revealed that the criteria under paragraphs(a)(2)(A) (increased imports) and (a)(2)(B) (shift in production or services to a foreign country) of section 222 have not been met.

TA–W No.	Subject firm	Location	Impact date
82,943	Pepperidge Farms, Aiken Staffing	Aiken, SC.	
82,996	Pratt & Whitney, United Technologies Corp., Global Supply Chain, Quest Global Staffing, etc.	East Hartford, CT.	
82,996A	Pratt & Whitney, United Technologies Corp., Global Supply Chain, Quest Global Staffing, etc.	Middletown, CT.	
83,061	Bank of America, Internal Call Center	Fresno, CA.	
83,067	Infiniti Plastic Technologies Inc., Infiniti Media Inc	Paducah, KY.	
83,092	Green Mountain Power Corporation, Northern New England Energy Corp., Meter Services Div., Meter Operations.	Colchester, VT.	
83,097	SBE, Inc., D/B/A SB Electronics, Inc., Orange Drop Product Line	Barre, VT.	
83,098	Palomar Health, Medical Transcription Department	Escondido, CA.	

Determinations Terminating Investigations of Petitions for Worker Adjustment Assistance

After notice of the petitions was published in the **Federal Register** and on the Department's Web site, as required by Section 221 of the Act (19 U.S.C. 2271), the Department initiated investigations of these petitions.

The following determinations terminating investigations were issued because the petitioner has requested that the petition be withdrawn.

TA–W No.	Subject firm	Location	Impact date
83,003	Daikin McQuay	Auburn, NY	
83,142	JCS 5 Star Outlet, SB Capital Acquisitions	Columbus, OH	

The following determinations terminating investigations were issued because the petitioning groups of workers are covered by active certifications. Consequently, further investigation in these cases would serve no purpose since the petitioning group of workers cannot be covered by more than one certification at a time.

TA–W No.	Subject firm	Location	Impact date
83,046	Fairchild Semiconductor, Product Development Group	West Jordan, UT	

The following determinations terminating investigations were issued because the petitions are the subject of ongoing investigations under petitions filed earlier covering the same petitioners.

TA–W No.	Subject firm	Location	Impact date
83,141	Pitney Bowes, Inc., Customer Support Services Group	Neenah, WI	

I hereby certify that the aforementioned determinations were issued during the period of October 21, 2013 through November 1, 2013. These determinations are available on the Department's Web site *tradeact/taa/taa_search_form.cfm* under the searchable listing of determinations or by calling the Office of Trade Adjustment Assistance toll free at 888–365–6822.

Signed at Washington, DC this 7th day of November 2013.

Michael W. Jaffe,

Certifying Officer, Office of Trade Adjustment Assistance.

[FR Doc. 2013–27938 Filed 11–20–13; 8:45 am]

BILLING CODE 4510–FN–P

DEPARTMENT OF LABOR

Employment and Training Administration

Investigations Regarding Eligibility To Apply for Worker Adjustment Assistance

Petitions have been filed with the Secretary of Labor under Section 221(a)

of the Trade Act of 1974 (''the Act'') and are identified in the Appendix to this notice. Upon receipt of these petitions, the Director of the Office of Trade Adjustment Assistance, Employment and Training Administration, has instituted investigations pursuant to Section 221(a) of the Act.

The purpose of each of the investigations is to determine whether the workers are eligible to apply for adjustment assistance under Title II, Chapter 2, of the Act. The investigations will further relate, as appropriate, to the determination of the date on which total or partial separations began or threatened to begin and the subdivision of the firm involved.

The petitioners or any other persons showing a substantial interest in the subject matter of the investigations may request a public hearing, provided such request is filed in writing with the Director, Office of Trade Adjustment Assistance, at the address shown below, not later than December 2, 2013.

Interested persons are invited to submit written comments regarding the subject matter of the investigations to the Director, Office of Trade Adjustment Assistance, at the address shown below, not later than December 2, 2013.

The petitions filed in this case are available for inspection at the Office of the Director, Office of Trade Adjustment Assistance, Employment and Training Administration, U.S. Department of Labor, Room N–5428, 200 Constitution Avenue NW., Washington, DC 20210.

Signed at Washington, DC, this 5th day of November, 2013.

Michael W. Jaffe,

Certifying Officer, Office of Trade Adjustment Assistance.

APPENDIX

[20 TAA petitions instituted between 10/21/13 and 10/25/13]

TA–W	Subject firm (petitioners)	Location	Date of institution	Date of petition
83154	PolyOne Corporation (Union)	Donora, PA	10/21/13	10/18/13
83155	Veolia Water Facility (State/One-Stop)	Jackson, MI	10/21/13	10/04/13
83156	Travelers Insurance (Workers)	Syracuse, NY	10/21/13	10/17/13
83157	Eaton (Company)	Goldsboro, NC	10/21/13	10/20/13
83158	NCR (State/One-Stop)	Bentonville, AR	10/21/13	10/07/13
83159	Native Accents LLC (Company)	Big Sky, MT	10/22/13	10/21/13
83160	AMP–A Fletcher Co. (Company)	Pontotoc, MS	10/22/13	10/21/13
83161	American Express TRS (State/One-Stop)	Salt Lake City, UT	10/22/13	10/21/13
83162	Siemens Industry Inc. (Company)	Elgin, IL	10/22/13	10/21/13
83163	Osram Sylvania (State/One-Stop)	Luquillo, PR	10/22/13	10/21/13
83164	Philips Lumileds Lighting Co. LLC (Company)	San Jose, CA	10/22/13	10/18/13
83165	York Newspaper Company, Lebanon Daily News (Company).	York, PA	10/23/13	10/22/13
83166	Ryder Systems, Inc. (Workers)	Grove City, PA	10/24/13	10/23/13
83167	Flotation Technologies LLC (State/One-Stop)	Biddeford, ME	10/24/13	10/23/13
83168	Jabil Circuit Inc (State/One-Stop)	Tempe, AZ	10/24/13	10/22/13
83169	AlberCorp (Company)	Pompano Beach, FL	10/24/13	10/23/13
83170	Ball Metal Container Corp. (State/One-Stop)	Gainesville, FL	10/25/13	10/24/13
83171	Cigna Health and Life Insurance Company (State/One-Stop).	St. Louis, MO	10/25/13	10/24/13
83172	Decanter Machine, Inc. (Company)	Roebuck, SC	10/25/13	10/24/13
83173	Masco Cabinetry LLC (Company)	Jackson, OH	10/25/13	10/21/13

[FR Doc. 2013–27936 Filed 11–20–13; 8:45 am]

BILLING CODE 4510–FN–P

DEPARTMENT OF LABOR

Employment and Training Administration

Investigations Regarding Eligibility To Apply for Worker Adjustment Assistance

Petitions have been filed with the Secretary of Labor under Section 221(a) of the Trade Act of 1974 (''the Act'') and are identified in the Appendix to this notice. Upon receipt of these petitions, the Director of the Office of Trade Adjustment Assistance, Employment and Training Administration, has instituted investigations pursuant to Section 221(a) of the Act.

The purpose of each of the investigations is to determine whether the workers are eligible to apply for adjustment assistance under Title II, Chapter 2, of the Act. The investigations will further relate, as appropriate, to the determination of the date on which total or partial separations began or threatened to begin and the subdivision of the firm involved.

The petitioners or any other persons showing a substantial interest in the subject matter of the investigations may request a public hearing, provided such request is filed in writing with the Director, Office of Trade Adjustment Assistance, at the address shown below, not later than December 2, 2013.

Interested persons are invited to submit written comments regarding the subject matter of the investigations to the Director, Office of Trade Adjustment Assistance, at the address shown below, not later than December 2, 2013.

The petitions filed in this case are available for inspection at the Office of the Director, Office of Trade Adjustment Assistance, Employment and Training Administration, U.S. Department of Labor, Room N–5428, 200 Constitution Avenue NW., Washington, DC 20210.

Signed at Washington, DC, this 7th day of November 2013.

Michael W. Jaffe,

Certifying Officer, Office of Trade Adjustment Assistance.

APPENDIX

[18 TAA petitions instituted between 10/28/13 and 11/1/13]

TA–W	Subject firm (petitioners)	Location	Date of institution	Date of petition
83174	Atmel Corporation (State/One-Stop)	Colorado Springs, CO	10/28/13	10/24/13
83175	John Wiley and Sons, Inc. (Workers)	Indianapolis, IN	10/28/13	10/25/13
83176	Circor-Spence Engineering Co., Inc. (Union)	Walden, NY	10/29/13	10/22/13
83177	JP Morgan Chase. Portfolio & Product Management/Solicitations (Workers).	Florence, SC	10/29/13	10/28/13
83178	The Berry Company, LLC (Workers)	Erie, PA	10/30/13	10/10/13
83179	Gamesa Technology Corporation (Union)	Trevose & Fairless Hills, PA	10/30/13	10/29/13
83180	Huber + Suhner, Inc. (State/One-Stop)	Essex Junction, VT	10/30/13	10/29/13
83181	Kloeckner Metals (Company)	Bensalem, PA	10/30/13	10/29/13
83182	Metlife (State/One-Stop)	Johnstown, PA	10/30/13	10/29/13
83183	Page 1 Solutions (State/One-Stop)	Golden, CO	10/30/13	10/28/13
83184	Redflex Traffic Systems, Inc. (Workers)	Phoenix, AZ	10/30/13	10/29/13
83185	Honeywell International (Workers)	Melbourne, FL	10/31/13	10/30/13
83186	Ruskin Company (Union)	Fairmont, WV	10/31/13	10/30/13
83187	SPX-Clydeunion Pumps (Workers)	Battle Creek, MI	10/31/13	10/22/13
83188	John Wiley & Sons (Workers)	Hoboken, NJ	10/31/13	10/30/13
83189	Capgemini (Workers)	Irving, TX	10/31/13	10/30/13
83190	Rockwell Collins Dallas Service Center (Workers)	Irving, TX	11/01/13	10/31/13
83191	Victor Innovative Textiles, LLC (Company)	Fall River, MA	11/01/13	10/30/13

[FR Doc. 2013–27937 Filed 11–20–13; 8:45 am]

BILLING CODE 4510–FN–P

NATIONAL AERONAUTICS AND SPACE ADMINISTRATION

[Notice: 13–133]

NASA Advisory Council; Aeronautics Committee; Meeting

AGENCY: National Aeronautics and Space Administration.

ACTION: Notice of meeting.

SUMMARY: In accordance with the Federal Advisory Committee Act, Public Law 92–463, as amended, the National Aeronautics and Space Administration announces a meeting of the Aeronautics Committee of the NASA Advisory Council. This Committee reports to the NAC. The meeting will be held for the purpose of soliciting, from the aeronautics community and other persons, research and technical information relevant to program planning.

DATES: Tuesday, December 3, 2013, 9:00 a.m. to 3:45 p.m.; Local Time.

ADDRESSES: National Institute of Aerospace Headquarters, Room 101, 100 Exploration Way, Hampton, VA 23666.

FOR FURTHER INFORMATION CONTACT: Ms. Susan L. Minor, Executive Secretary for the Aeronautics Committee, NASA Headquarters, Washington, DC 20546, (202) 358–0566, or *susan.l.minor@nasa.gov.*

SUPPLEMENTARY INFORMATION: The meeting will be open to the public up to the capacity of the room. Any person interested in participating in the meeting by WebEx and telephone should contact Ms. Susan L. Minor at (202) 358–0566 for the web link, toll-free number and passcode. The agenda for the meeting includes the following topics:

- Langley Research Center Overview
- National Research Council Autonomy Study Update
- Rotary Wing Project Discussion
- Advanced Composites Project Planning Update

It is imperative that these meetings be held on this date to accommodate the scheduling priorities of the key participants.

Patricia D. Rausch,

Advisory Committee Management Officer, National Aeronautics and Space Administration.

[FR Doc. 2013–27855 Filed 11–20–13; 8:45 am]

BILLING CODE 7510–13–P

SECURITIES AND EXCHANGE COMMISSION

[Investment Company Act Release No. 30785; File No. 812–14204]

AIM Growth Series (Invesco Growth Series), et al.; Notice of Application

November 15, 2013.

AGENCY: Securities and Exchange Commission (''Commission'').

ACTION: Notice of an application under section 6(c) of the Investment Company Act of 1940 (''Act'') for an exemption from section 15(a) of the Act and rule 18f–2 under the Act, as well as from certain disclosure requirements.

SUMMARY: *Summary of Application:* Applicants request an order that would permit them to enter into and materially amend subadvisory agreements with Wholly-Owned Sub-Advisors (as defined below) and non-affiliated sub-advisers without shareholder approval and would grant relief from certain disclosure requirements.

APPLICANTS: AIM Growth Series (Invesco Growth Series) and AIM Investment Funds (Invesco Investment Funds) (each, a ''Trust''), and Invesco Advisers, Inc. (the ''Advisor'').

DATES: *Filing Dates:* The application was filed on August 27, 2013, and amended on November 1, 2013.

HEARING OR NOTIFICATION OF HEARING: An order granting the application will be issued unless the Commission orders a hearing. Interested persons may request a hearing by writing to the Commission's Secretary and serving applicants with a copy of the request, personally or by mail. Hearing requests should be received by the Commission by 5:30 p.m. on December 9, 2013, and should be accompanied by proof of service on applicants, in the form of an affidavit or, for lawyers, a certificate of service. Hearing requests should state the nature of the writer's interest, the reason for the request, and the issues contested. Persons who wish to be notified of a hearing may request notification by writing to the Commission's Secretary.

ADDRESSES: Elizabeth M. Murphy, Secretary, U.S. Securities and Exchange Commission, 100 F Street NE., Washington, DC 20549–1090. Applicants: Invesco Advisers, Inc., 11

Greenway Plaza, Suite 2500, Houston, TX 77046.

FOR FURTHER INFORMATION CONTACT: Laura J. Riegel, Senior Counsel, at (202) 551–6873, or Mary Kay Frech, Assistant Director (Acting), at (202) 551–6821 (Division of Investment Management, Exemptive Applications Office).

SUPPLEMENTARY INFORMATION: The following is a summary of the application. The complete application may be obtained via the Commission's Web site by searching for the file number or an applicant using the Company name box, at *http://www.sec.gov/search/search.htm* or by calling (202) 551–8090.

Applicants' Representations

1. Each Trust is organized as a Delaware statutory trust and is registered under the Act as an open-end management investment company. Each Trust currently intends to introduce at least one series of shares (each, a ''Series'') with its own distinct investment objective, policies and restrictions that would operate under a multi-manager structure. The Advisor is a Delaware corporation and is registered as an investment adviser under the Investment Advisers Act of 1940 (''Advisers Act'').[1] The Advisor is a wholly-owned subsidiary of Invesco Ltd (''Invesco''). Invesco maintains an asset management presence through wholly-owned subsidiaries, including the Advisor.

2. Each Series has or will have, as its investment adviser, the Advisor, or an entity controlling, controlled by or under common control with the Advisor or its successors (included in the term, the ''Advisor'').[2] The Advisor will serve as the investment adviser to each Series pursuant to an investment advisory agreement with the relevant Trust (''Investment Management Agreement'). Each Investment Management Agreement has been or will be approved by the board of trustees of the relevant Trust (''Board''),[3] including a majority of the members of the Board who are not ''interested persons,'' as defined in section 2(a)(19) of the Act, of the Series or the Advisor (''Independent Board Members'') and by the shareholders of the relevant Series as required by sections 15(a) and 15(c) of the Act and rule 18f–2 thereunder. The terms of these Investment Management Agreements comply or will comply with section 15(a) of the Act.

3. Under the terms of each Investment Management Agreement, the Advisor, subject to the supervision of the Board, will provide continuous investment management of the assets of each Series. The Advisor will periodically review a Series' investment policies and strategies, and based on the need of a particular Series may recommend changes to the investment policies and strategies of the Series for consideration by the Board. For its services to each Series under the applicable Investment Management Agreement, the Advisor will receive an investment management fee from that Series. Each Investment Management Agreement provides that the Advisor may, subject to the approval of the Board, including a majority of the Independent Board Members, and the shareholders of the applicable Subadvised Series (if required), delegate portfolio management responsibilities of all or a portion of the assets of a Subadvised Series to one or more Sub-Advisors.[4]

4. Applicants request an order to permit the Advisor, subject to the approval of the Board of the relevant Trust, including a majority of the Independent Board Members, to, without obtaining shareholder approval: (i) Select Sub-Advisors to manage all or a portion of the assets of a Series and enter into Sub-Advisory Agreements (as defined below) with the Sub-Advisors, and (ii) materially amend Sub-Advisory Agreements with the Sub-Advisors.[5] The requested relief will not extend to any sub-adviser, other than a Wholly-Owned Sub-Advisor, who is an affiliated person, as defined in section 2(a)(3) of the Act, of the Subadvised Series, the applicable Trust, or of the Advisor, other than by reason of serving as a sub-adviser to one or more of the Subadvised Series (''Affiliated Sub-Advisor'').

5. Pursuant to each Investment Management Agreement, the Advisor has overall responsibility for the management and investment of the assets of each Subadvised Series. These responsibilities include recommending the removal or replacement of Sub-Advisors, determining the portion of that Subadvised Series' assets to be managed by any given Sub-Advisor and reallocating those assets as necessary from time to time.

6. The Advisor may enter into sub-advisory agreements with various Sub-Advisors (''Sub-Advisory Agreements'') to provide investment management services to the Subadvised Series. The terms of each Sub-Advisory Agreement comply or will comply fully with the requirements of section 15(a) of the Act and have been or will be approved by the Board, including a majority of the Independent Board Members and the initial shareholder of the applicable Subadvised Series, in accordance with sections 15(a) and 15(c) of the Act and rule 18f–2 thereunder. The Sub-Advisors, subject to the supervision of the Advisor and oversight of the Board, will determine the securities and other investments to be purchased or sold by a Subadvised Series and place orders with brokers or dealers that they select. The Advisor will compensate each Sub-Advisor out of the fee paid to the Advisor under the applicable Investment Management Agreement.

7. Subadvised Series will inform shareholders of the hiring of a new Sub-Advisor pursuant to the following procedures (''Modified Notice and Access Procedures''): (a) Within 90 days after a new Sub-Advisor is hired for any Subadvised Series, that Subadvised Series will send its shareholders either a Multi-manager Notice or a Multi-manager Notice and Multi-manager Information Statement;[6] and (b) the

[1] Applicants request that the relief apply to applicants, as well as to any future Series and any other existing or future registered open-end management investment company or series thereof that is advised by the Advisor, uses the multi-manager structure described in the application, and complies with the terms and conditions of the application (''Subadvised Series''). All registered open-end investment companies that currently intend to rely on the requested order are named as applicants. Any entity that relies on the requested order will do so only in accordance with the terms and conditions contained in the application. If the name of any Subadvised Series contains the name of a Sub-Advisor (as defined below), the name of the Advisor that serves as the primary adviser to the Subadvised Series, or a trademark or trade name that is owned by or publicly used to identify that Advisor, will precede the name of the Sub-Advisor.

[2] Each Advisor is, or will be, registered with the Commission as an investment adviser under the Advisers Act. For purposes of the requested order, ''successor'' is limited to an entity that results from a reorganization into another jurisdiction or a change in the type of business organization.

[3] The term ''Board'' also includes the board of trustees or directors of a future Subadvised Series.

[4] A ''Sub-Advisor'' is (a) an indirect or direct ''wholly-owned subsidiary'' (as such term is defined in the Act) of the Advisor for that Series; (b) a sister company of the Advisor for that Series that is an indirect or direct ''wholly-owned subsidiary'' (as such term is defined in the Act) of the same company that, indirectly or directly, wholly owns the Advisor (each of (a) and (b), a ''Wholly-Owned Sub-Advisor'' and collectively, the ''Wholly-Owned Sub-Advisors''), or (c) an investment sub-adviser for that Series that is not an ''affiliated person'' (as such term is defined in section 2(a)(3) of the Act) of the Series or the Advisor, except to the extent that an affiliation arises solely because the sub-adviser serves as a sub-adviser to one or more Series (each, a ''Non-Affiliated Sub-Advisor'').

[5] Shareholder approval will continue to be required for any other sub-adviser change (not otherwise permitted by rule or other action of the Commission or staff) and material amendments to an existing Sub-Advisory Agreement with any sub-adviser other than a Non-Affiliated Sub-Advisor or a Wholly-Owned Sub-Advisor (all such changes referred to as ''Ineligible Sub-Advisor Changes'').

[6] A ''Multi-manager Notice'' will be modeled on a Notice of Internet Availability as defined in rule

Subadvised Series will make the Multi-manager Information Statement available on the Web site identified in the Multi-manager Notice no later than when the Multi-manager Notice (or Multi-manager Notice and Multi-manager Information Statement) is first sent to shareholders, and will maintain it on that Web site for at least 90 days. In the circumstances described in the application, a proxy solicitation to approve the appointment of new Sub-Advisors provides no more meaningful information to shareholders than the proposed Multi-manager Information Statement. Applicants state that each Board would comply with the requirements of sections 15(a) and 15(c) of the Act before entering into or amending Sub-Advisory Agreements.

8. Applicants also request an order exempting the Subadvised Series from certain disclosure obligations that may require each Subadvised Series to disclose fees paid by the Advisor to each Sub-Advisor. Applicants seek relief to permit each Subadvised Series to disclose (as a dollar amount and a percentage of the Subadvised Series' net assets): (a) The aggregate fees paid to the Advisor and any Wholly-Owned Sub-Advisors; (b) the aggregate fees paid to Non-Affiliated Sub-Advisors; and (c) the fee paid to each Affiliated Sub-Advisor (collectively, the ''Aggregate Fee Disclosure'').

Applicants' Legal Analysis

1. Section 15(a) of the Act states, in part, that it is unlawful for any person to act as an investment adviser to a registered investment company ''except pursuant to a written contract, which contract, whether with such registered company or with an investment adviser of such registered company, has been approved by the vote of a majority of the outstanding voting securities of such registered company.'' Rule 18f–2 under the Act provides that each series or class of stock in a series investment company affected by a matter must approve that matter if the Act requires shareholder approval.

2. Form N–1A is the registration statement used by open-end investment companies. Item 19(a)(3) of Form N–1A requires a registered investment company to disclose in its statement of additional information the method of computing the ''advisory fee payable'' by the investment company, including the total dollar amounts that the investment company ''paid to the adviser (aggregated with amounts paid to affiliated advisers, if any), and any advisers who are not affiliated persons of the adviser, under the investment advisory contract for the last three fiscal years.''

3. Rule 20a–1 under the Act requires proxies solicited with respect to a registered investment company to comply with Schedule 14A under the Exchange Act. Items 22(c)(1)(ii), 22(c)(1)(iii), 22(c)(8) and 22(c)(9) of Schedule 14A, taken together, require a proxy statement for a shareholder meeting at which the advisory contract will be voted upon to include the ''rate of compensation of the investment adviser,'' the ''aggregate amount of the investment adviser's fee,'' a description of the ''terms of the contract to be acted upon,'' and, if a change in the advisory fee is proposed, the existing and proposed fees and the difference between the two fees.

4. Regulation S–X sets forth the requirements for financial statements required to be included as part of a registered investment company's registration statement and shareholder reports filed with the Commission. Sections 6–07(2)(a), (b), and (c) of Regulation S–X require a registered investment company to include in its financial statement information about the investment advisory fees.

5. Section 6(c) of the Act provides that the Commission by order upon application may conditionally or unconditionally exempt any person, security, or transaction or any class or classes of persons, securities, or transactions from any provisions of the Act, or from any rule thereunder, if such exemption is necessary or appropriate in the public interest and consistent with the protection of investors and the purposes fairly intended by the policy and provisions of the Act. Applicants state that their requested relief meets this standard for the reasons discussed below.

6. Applicants assert that the shareholders expect the Advisor, subject to the review and approval of the Board, to select the Sub-Advisors who are in the best position to achieve the Subadvised Series' investment objective. Applicants assert that, from the perspective of the shareholder, the role of the Sub-Advisors is substantially equivalent to the role of the individual portfolio managers employed by an investment adviser to a traditional investment company. Applicants believe that permitting the Advisor to perform the duties for which the shareholders of the Subadvised Series are paying the Advisor—the selection, supervision and evaluation of the Sub-Advisors—without incurring unnecessary delays or expenses is appropriate in the interest of the Subadvised Series' shareholders and will allow such Subadvised Series to operate more efficiently. Applicants state that each Investment Management Agreement will continue to be fully subject to section 15(a) of the Act and rule 18f–2 under the Act and approved by the Board, including a majority of the Independent Board Members, in the manner required by sections 15(a) and 15(c) of the Act. Applicants are not seeking an exemption with respect to the Investment Management Agreements.

7. Applicants assert that disclosure of the individual fees that the Advisor would pay to the Sub-Advisors of Subadvised Series that operate under the multi-manager structure described in the application would not serve any meaningful purpose. Applicants contend that the primary reasons for requiring disclosure of individual fees paid to Sub-Advisors are to inform shareholders of expenses to be charged by a particular Subadvised Series and to enable shareholders to compare the fees to those of other comparable investment companies. Applicants believe that the requested relief satisfies these objectives because the advisory fee paid to the Advisor will be fully disclosed and, therefore, shareholders will know what the Subadvised Series' fees and expenses are and will be able to compare the advisory fees a Subadvised Series is charged to those of other investment companies. Applicants assert that the requested disclosure relief would benefit shareholders of the Subadvised Series because it would improve the Advisor's ability to negotiate the fees paid to Sub-Advisors. Applicants state that the Advisor may be able to negotiate rates that are below a Sub-Advisor's ''posted'' amounts if the Advisor is not required to disclose the Sub-Advisors' fees to the public. Applicants submit that the relief

14a–16 under the Securities Exchange Act of 1934 (''Exchange Act''), and specifically will, among other things: (a) Summarize the relevant information regarding the new Sub-Advisor (except as modified to permit Aggregate Fee Disclosure (as defined below); (b) inform shareholders that the Multi-manager Information Statement is available on a Web site; (c) provide the Web site address; (d) state the time period during which the Multi-manager Information Statement will remain available on that Web site; (e) provide instructions for accessing and printing the Multi-manager Information Statement; and (f) instruct the shareholder that a paper or email copy of the Multi-manager Information Statement may be obtained, without charge, by contacting the Subadvised Series.

A ''Multi-manager Information Statement'' will meet the requirements of Regulation 14C, Schedule 14C and Item 22 of Schedule 14A under the Exchange Act for an information statement, except as modified by the order to permit Aggregate Fee Disclosure. Multi-manager Information Statements will be filed with the Commission via the EDGAR system.

requested to use Aggregate Fee Disclosure will encourage Sub-Advisors to negotiate lower subadvisory fees with the Advisor if the lower fees are not required to be made public.

8. For the reasons discussed above, applicants submit that the requested relief meets the standards for relief under section 6(c) of the Act. Applicants state that the operation of the Subadvised Series in the manner described in the application must be approved by shareholders of a Subadvised Series before that Subadvised Series may rely on the requested relief. In addition, applicants state that the proposed conditions to the requested relief are designed to address any potential conflicts of interest, including any posed by the use of Wholly-Owned Sub-Advisors, and provide that shareholders are informed when new Sub-Advisors are hired. Applicants assert that conditions 6, 10 and 11 are designed to provide the Board with sufficient independence and the resources and information it needs to monitor and address any conflicts of interest with affiliated persons of the Advisor, including Wholly-Owned Sub-Advisors. Applicants state that, accordingly, they believe the requested relief is necessary or appropriate in the public interest and consistent with the protection of investors and the purposes fairly intended by the policy and provisions of the Act.

Applicants' Conditions

Applicants agree that any order granting the requested relief will be subject to the following conditions:[7]

1. Before a Subadvised Series may rely on the order requested in the application, the operation of the Subadvised Series in the manner described in the application, including the hiring of Wholly-Owned Sub-Advisors, will be, or has been, approved by a majority of the Subadvised Series' outstanding voting securities as defined in the Act, or, in the case of a new Subadvised Series whose public shareholders purchase shares on the basis of a prospectus containing the disclosure contemplated by condition 2 below, by the sole initial shareholder before offering the Subadvised Series' shares to the public.

2. The prospectus for each Subadvised Series will disclose the existence, substance, and effect of any order granted pursuant to the application. Each Subadvised Series will hold itself out to the public as employing the multi-manager structure described in the application. Each prospectus will prominently disclose that the Advisor has the ultimate responsibility, subject to oversight by the Board, to oversee the Sub-Advisors and recommend their hiring, termination and replacement.

3. The Advisor will provide general management services to a Subadvised Series, including overall supervisory responsibility for the general management and investment of the Subadvised Series' assets. Subject to review and approval of the Board, the Advisor will (a) set a Subadvised Series' overall investment strategies, (b) evaluate, select, and recommend Sub-Advisors to manage all or a portion of a Subadvised Series' assets, and (c) implement procedures reasonably designed to ensure that Sub-Advisors comply with a Subadvised Series' investment objective, policies and restrictions. Subject to review by the Board, the Advisor will (a) when appropriate, allocate and reallocate a Subadvised Series' assets among multiple Sub-Advisors; and (b) monitor and evaluate the performance of Sub-Advisors.

4. A Subadvised Series will not make any Ineligible Sub-Advisor Changes without the approval of the shareholders of the applicable Subadvised Series.

5. Subadvised Series will inform shareholders of the hiring of a new Sub-Advisor within 90 days after the hiring of the new Sub-Advisor pursuant to the Modified Notice and Access Procedures.

6. At all times, at least a majority of the Board will be Independent Board Members, and the selection and nomination of new or additional Independent Board Members will be placed within the discretion of the then-existing Independent Board Members.

7. Independent Legal Counsel, as defined in rule 0–1(a)(6) under the Act, will be engaged to represent the Independent Board Members. The selection of such counsel will be within the discretion of the then-existing Independent Board Members.

8. The Advisor will provide the Board, no less frequently than quarterly, with information about the profitability of the Advisor on a per Subadvised Series basis. The information will reflect the impact on profitability of the hiring or termination of any sub-adviser during the applicable quarter.

9. Whenever a sub-adviser is hired or terminated, the Advisor will provide the Board with information showing the expected impact on the profitability of the Advisor.

10. Whenever a sub-adviser change is proposed for a Subadvised Series with an Affiliated Sub-Advisor or a Wholly-Owned Sub-Advisor, the Board, including a majority of the Independent Board Members, will make a separate finding, reflected in the Board minutes, that such change is in the best interests of the Subadvised Series and its shareholders, and does not involve a conflict of interest from which the Advisor or the Affiliated Sub-Advisor or Wholly-Owned Sub-Advisor derives an inappropriate advantage.

11. No Board member or officer of a Subadvised Series, or director or officer of the Advisor, will own directly or indirectly (other than through a pooled investment vehicle that is not controlled by such person), any interest in a Sub-Advisor, except for (a) ownership of interests in the Advisor or any entity, other than a Wholly-Owned Sub-Advisor, that controls, is controlled by, or is under common control with the Advisor, or (b) ownership of less than 1% of the outstanding securities of any class of equity or debt of a publicly traded company that is either a Sub-Advisor or an entity that controls, is controlled by, or is under common control with a Sub-Advisor.

12. Each Subadvised Series will disclose the Aggregate Fee Disclosure in its registration statement.

13. In the event the Commission adopts a rule under the Act providing substantially similar relief to that requested in the application, the requested order will expire on the effective date of that rule.

For the Commission, by the Division of Investment Management, under delegated authority.

Kevin M. O'Neill,

Deputy Secretary.

[FR Doc. 2013–27907 Filed 11–20–13; 8:45 am]

BILLING CODE 8011–01–P

[7] Applicants will only comply with conditions 7, 8, 9 and 12 if they rely on the relief that would allow them to provide Aggregate Fee Disclosure.

SECURITIES AND EXCHANGE COMMISSION

[Investment Company Act Release No. 30786; File No. 812–14212]

ETFis Series Trust I, et al.; Notice of Application

November 15, 2013.

AGENCY: Securities and Exchange Commission (''Commission'').

ACTION: Notice of an application for an order under section 6(c) of the Investment Company Act of 1940 (the ''Act'') for an exemption from sections 2(a)(32), 5(a)(1), 22(d), and 22(e) of the Act and rule 22c–1 under the Act, under sections 6(c) and 17(b) of the Act for an

exemption from sections 17(a)(1) and 17(a)(2) of the Act, and under section 12(d)(1)(J) for an exemption from sections 12(d)(1)(A) and 12(d)(1)(B) of the Act.

SUMMARY: *Summary of Application:* Applicants request an order that would permit (a) series of certain open-end management investment companies to issue shares (''Shares'') redeemable in large aggregations only (''Creation Units''); (b) secondary market transactions in Shares to occur at negotiated market prices rather than at net asset value (''NAV''); (c) certain series to pay redemption proceeds, under certain circumstances, more than seven days after the tender of Shares for redemption; (d) certain affiliated persons of the series to deposit securities into, and receive securities from, the series in connection with the purchase and redemption of Creation Units; and (e) certain registered management investment companies and unit investment trusts outside of the same group of investment companies as the series to acquire Shares.

APPLICANTS: ETFis Series Trust I (''Trust''), Etfis Capital LLC (''Initial Adviser''), and ETF Distributors LLC (''Affiliated Index Provider'').

DATES: *Filing Dates:* The application was filed on September 19, 2013.

HEARING OR NOTIFICATION OF HEARING: An order granting the requested relief will be issued unless the Commission orders a hearing. Interested persons may request a hearing by writing to the Commission's Secretary and serving applicants with a copy of the request, personally or by mail. Hearing requests should be received by the Commission by 5:30 p.m. on December 10, 2013, and should be accompanied by proof of service on applicants, in the form of an affidavit, or for lawyers, a certificate of service. Hearing requests should state the nature of the writer's interest, the reason for the request, and the issues contested. Persons who wish to be notified of a hearing may request notification by writing to the Commission's Secretary.

ADDRESSES: Elizabeth M. Murphy, Secretary, Securities and Exchange Commission, 100 F Street NE., Washington, DC 20549–1090; Applicants, 317 Madison Avenue, Suite 920, New York, NY 10017.

FOR FURTHER INFORMATION CONTACT: Courtney S. Thornton, Senior Counsel, at (202) 551–6812, or David P. Bartels, Branch Chief, at (202) 551–6821 (Division of Investment Management, Exemptive Applications Office).

SUPPLEMENTARY INFORMATION: The following is a summary of the application. The complete application may be obtained via the Commission's Web site by searching for the file number, or for an applicant using the Company name box, at *http://www.sec.gov/search/search.htm* or by calling (202) 551–8090.

Applicants' Representations

1. The Trust is a statutory trust organized under the laws of Delaware. The Trust is registered under the Act as an open-end management investment company with multiple series. The initial series of the Trust (''Initial Fund'') will be a Self-Indexing Fund (as defined below).

2. The Initial Adviser will be registered as an investment adviser under the Investment Advisers Act of 1940 (the ''Advisers Act'') and will be the investment adviser to the Funds. Any other Adviser (defined below) also will be registered as an investment adviser under the Advisers Act. The Adviser may enter into sub-advisory agreements with one or more investment advisers to act as sub-advisers to particular Funds (each, a ''Sub-Adviser''). Any Sub-Adviser will either be registered under the Advisers Act or will not be required to register thereunder.

3. The Trust will enter into a distribution agreement with one or more distributors (each, a ''Distributor''). Each Distributor will be a broker-dealer (''Broker'') registered under the Securities Exchange Act of 1934 (the ''Exchange Act'') and will act as distributor and principal underwriter of one or more of the Funds. The Distributor of any Fund may be an affiliated person, as defined in section 2(a)(3) of the Act (''Affiliated Person''), or an affiliated person of an Affiliated Person (''Second-Tier Affiliate''), of that Fund's Adviser and/or Sub-Advisers. No Distributor will be affiliated with any Exchange (defined below).

4. Applicants request that the order apply to the Initial Fund, as well as any additional series of the Trust and other open-end management investment companies, or series thereof, that may be created in the future (''Future Funds''), each of which will operate as an exchanged-traded fund (''ETF'') and will track a specified index comprised of domestic or foreign equity and/or fixed income securities (each, an ''Underlying Index''). Any Future Fund will (a) be advised by the Initial Adviser or an entity controlling, controlled by, or under common control with the Initial Adviser (each, an ''Adviser'') and (b) comply with the terms and conditions of the application. The Initial Fund and Future Funds, together, are the ''Funds.'' [1]

5. Each Fund will hold certain securities (''Portfolio Securities'') selected to correspond generally to the performance of its Underlying Index. Certain of the Funds will be based on Underlying Indexes that will be comprised solely of equity and/or fixed income securities issued by one or more of the following categories of issuers: (i) Domestic issuers and (ii) non-domestic issuers meeting the requirements for trading in U.S. markets. Other Funds will be based on Underlying Indexes that will be comprised solely of foreign and domestic, or solely foreign, equity and/or fixed income securities (''Foreign Funds'').

6. Applicants represent that each Fund will invest at least 80% of its assets (excluding securities lending collateral) in the component securities of its respective Underlying Index (''Component Securities'') and TBA Transactions,[2] and in the case of Foreign Funds, Component Securities and Depositary Receipts [3] representing Component Securities. Each Fund may also invest up to 20% of its assets in certain index futures, options, options on index futures, swap contracts or other derivatives, as related to its respective Underlying Index and its Component Securities, cash and cash equivalents, other investment companies, as well as in securities and other instruments not included in its Underlying Index but which the Adviser believes will help the Fund track its Underlying Index. A Fund may also

[1] All existing entities that intend to rely on the requested order have been named as applicants. Any other existing or future entity that subsequently relies on the order will comply with the terms and conditions of the order. A Fund of Funds (as defined below) may rely on the order only to invest in Funds and not in any other registered investment company.

[2] A ''to-be-announced transaction'' or ''TBA Transaction'' is a method of trading mortgage-backed securities. In a TBA Transaction, the buyer and seller agree upon general trade parameters such as agency, settlement date, par amount, and price. The actual pools delivered generally are determined two days prior to settlement date.

[3] Depositary receipts representing foreign securities (''Depositary Receipts'') include American Depositary Receipts and Global Depositary Receipts. The Funds may invest in Depositary Receipts representing foreign securities in which they seek to invest. Depositary Receipts are typically issued by a financial institution (a ''depositary bank'') and evidence ownership interests in a security or a pool of securities that have been deposited with the depositary bank. A Fund will not invest in any Depositary Receipts that the Adviser or any Sub-Adviser deems to be illiquid or for which pricing information is not readily available. No affiliated person of a Fund, the Adviser or any Sub-Adviser will serve as the depositary bank for any Depositary Receipts held by a Fund.

engage in short sales in accordance with its investment objective.

7. The Trust may issue Funds that seek to track Underlying Indexes constructed using 130/30 investment strategies (''130/30 Funds'') or other long/short investment strategies (''Long/Short Funds''). Each Long/Short Fund will establish (i) exposures equal to approximately 100% of the long positions specified by the Long/Short Index [4] and (ii) exposures equal to approximately 100% of the short positions specified by the Long/Short Index. Each 130/30 Fund will include strategies that: (i) Establish long positions in securities so that total long exposure represents approximately 130% of a Fund's net assets; and (ii) simultaneously establish short positions in other securities so that total short exposure represents approximately 30% of such Fund's net assets. Each Business Day, for each Long/Short Fund and 130/30 Fund, the Adviser will provide full portfolio transparency on the Fund's publicly available Web site (''Web site'') by making available the Fund's Portfolio Holdings (defined below) before the commencement of trading of Shares on the Listing Exchange (defined below).[5] The information provided on the Web site will be formatted to be reader-friendly.

8. A Fund will utilize either a replication or representative sampling strategy to track its Underlying Index. A Fund using a replication strategy will invest in the Component Securities of its Underlying Index in the same approximate proportions as in such Underlying Index. A Fund using a representative sampling strategy will hold some, but not necessarily all of the Component Securities of its Underlying Index. Applicants state that a Fund using a representative sampling strategy will not be expected to track the performance of its Underlying Index with the same degree of accuracy as would an investment vehicle that invested in every Component Security of the Underlying Index with the same weighting as the Underlying Index. Applicants expect that each Fund will have an annual tracking error relative to the performance of its Underlying Index of less than 5%.

9. Each Fund will be entitled to use its Underlying Index pursuant to either a licensing agreement with the entity that compiles, creates, sponsors or maintains the Underlying Index (each, an ''Index Provider'') or a sub-licensing arrangement with the Adviser, which will have a licensing agreement with such Index Provider.[6] A ''Self-Indexing Fund'' is a Fund for which an Affiliated Person, or a Second-Tier Affiliate, of the Trust or a Fund, of the Adviser, of any Sub-Adviser to or promoter of a Fund, or of the Distributor (each, an ''Affiliated Index Provider'') [7] will serve as the Index Provider. In the case of Self-Indexing Funds, an Affiliated Index Provider will create a proprietary, rules-based methodology to create Underlying Indexes (each an ''Affiliated Index'').[8] Except with respect to the Self-Indexing Funds, no Index Provider is or will be an Affiliated Person, or a Second-Tier Affiliate, of the Trust or a Fund, of the Adviser, of any Sub-Adviser to or promoter of a Fund, or of the Distributor.

10. Applicants recognize that Self-Indexing Funds could raise concerns regarding the ability of the Affiliated Index Provider to manipulate the Underlying Index to the benefit or detriment of the Self-Indexing Fund. Applicants further recognize the potential for conflicts that may arise with respect to the personal trading activity of personnel of the Affiliated Index Provider who have knowledge of changes to an Underlying Index prior to the time that information is publicly disseminated. Prior orders granted to self-indexing ETFs (''Prior Self-Indexing Orders'') addressed these concerns by creating a framework that required: (i) Transparency of the Underlying Indexes; (ii) the adoption of policies and procedures not otherwise required by the Act designed to mitigate such conflicts of interest; (iii) limitations on the ability to change the rules for index compilation and the component securities of the index; (iv) that the index provider enter into an agreement with an unaffiliated third party to act as ''Calculation Agent''; and (v) certain limitations designed to separate employees of the index provider, adviser and Calculation Agent (clauses (ii) through (v) are hereinafter referred to as ''Policies and Procedures'').[9]

11. Instead of adopting the same or similar Policies and Procedures, Applicants propose that each day that a Fund, the NYSE and the national securities exchange (as defined in section 2(a)(26) of the Act) (an ''Exchange'') on which the Fund's Shares are primarily listed (''Listing Exchange'') are open for business, including any day that a Fund is required to be open under section 22(e) of the Act (a ''Business Day''), each Self-Indexing Fund will post on its Web site, before commencement of trading of Shares on the Listing Exchange, the identities and quantities of the portfolio securities, assets, and other positions held by the Fund that will form the basis for the Fund's calculation of its NAV at the end of the Business Day (''Portfolio Holdings''). Applicants believe that requiring Self-Indexing Funds to maintain full portfolio transparency will provide an effective alternative mechanism for addressing any such potential conflicts of interest.

12. Applicants represent that each Self-Indexing Fund's Portfolio Holdings will be as transparent as the portfolio holdings of existing actively managed ETFs. Applicants observe that the framework set forth in the Prior Self-Indexing Orders was established before the Commission began issuing exemptive relief to allow the offering of actively-managed ETFs. Unlike passively-managed ETFs, actively-managed ETFs do not seek to replicate the performance of a specified index but rather seek to achieve their investment objectives by using an ''active'' management strategy. Applicants contend that the structure of actively managed ETFs presents potential

[4] Underlying Indexes that include both long and short positions in securities are referred to as ''Long/Short Indexes.''

[5] Under accounting procedures followed by each Fund, trades made on the prior Business Day (''T'') will be booked and reflected in NAV on the current Business Day (T+1). Accordingly, the Funds will be able to disclose at the beginning of the Business Day the portfolio that will form the basis for the NAV calculation at the end of the Business Day.

[6] The licenses for the Self-Indexing Funds will specifically state that the Affiliated Index Provider (or in case of a sub-licensing agreement, the Adviser) must provide the use of the Underlying Indexes and related intellectual property at no cost to the Trust and the Self-Indexing Funds.

[7] Currently ETF Distributors LLC is the only entity that will serve as Affiliated Index Provider. Any future entity that acts as Affiliated Index Provider will comply with the terms and conditions of the application.

[8] The Affiliated Indexes may be made available to registered investment companies, as well as separately managed accounts of institutional investors and privately offered funds that are not deemed to be ''investment companies'' in reliance on section 3(c)(1) or 3(c)(7) of the Act for which the Adviser acts as adviser or subadviser (''Affiliated Accounts'') as well as other such registered investment companies, separately managed accounts and privately offered funds for which it does not act either as adviser or subadviser (''Unaffiliated Accounts''). The Affiliated Accounts and the Unaffiliated Accounts, like the Funds, would seek to track the performance of one or more Underlying Index(es) by investing in the constituents of such Underlying Indexes or a representative sample of such constituents of the Underlying Index. Consistent with the relief requested from section 17(a), the Affiliated Accounts will not engage in Creation Unit transactions with a Fund.

[9] *See, e.g.,* In the Matter of WisdomTree Investments Inc., et al., Investment Company Act Release Nos. 27324 (May 18, 2006) (notice) and 27391 (June 12, 2006) (order); In the Matter of IndexIQ ETF Trust, *et al.,* Investment Company Act Release Nos. 28638 (Feb. 27, 2009) (notice) and 28653 (March 20, 2009) (order); and Van Eck Associates Corporation, *et al., et al.,* Investment Company Act Release Nos. 29455 (Oct. 1, 2010) (notice) and 29490 (Oct. 26, 2010) (order).

conflicts of interest that are the same as those presented by Self-Indexing Funds because the portfolio managers of an actively managed ETF by definition have advance knowledge of pending portfolio changes. However, rather than requiring Policies and Procedures similar to those required under the Prior Self-Indexing Orders, Applicants believe that actively managed ETFs address these potential conflicts of interest appropriately through full portfolio transparency, as the conditions to their relevant exemptive relief require.

13. In addition, Applicants do not believe the potential for conflicts of interest raised by the Adviser's use of the Underlying Indexes in connection with the management of the Self Indexing Funds and the Affiliated Accounts will be substantially different from the potential conflicts presented by an adviser managing two or more registered funds. Both the Act and the Advisers Act contain various protections to address conflicts of interest where an adviser is managing two or more registered funds and these protections will also help address these conflicts with respect to the Self-Indexing Funds.[10]

14. The Adviser and any Sub-Adviser has adopted or will adopt, pursuant to Rule 206(4)–7 under the Advisers Act, written policies and procedures designed to prevent violations of the Advisers Act and the rules thereunder. These include policies and procedures designed to minimize potential conflicts of interest among the Self-Indexing Funds and the Affiliated Accounts, such as cross trading policies, as well as those designed to ensure the equitable allocation of portfolio transactions and brokerage commissions. In addition, the Adviser has adopted policies and procedures as required under section 204A of the Advisers Act, which are reasonably designed in light of the nature of its business to prevent the misuse, in violation of the Advisers Act or the Exchange Act or the rules thereunder, of material non-public information by the Adviser or an associated person (''Inside Information Policy''). Any Sub-Adviser will be required to adopt and maintain a similar Inside Information Policy. In accordance with the Code of Ethics[11] and Inside Information Policy of the Adviser and Sub-Advisers, personnel of those entities with knowledge about the composition of the Portfolio Deposit[12] will be prohibited from disclosing such information to any other person, except as authorized in the course of their employment, until such information is made public. In addition, an Index Provider will not provide any information relating to changes to an Underlying Index's methodology for the inclusion of component securities, the inclusion or exclusion of specific component securities, or methodology for the calculation or the return of component securities, in advance of a public announcement of such changes by the Index Provider. The Adviser will also include under Item 10.C. of Part 2 of its Form ADV a discussion of its relationship to any Affiliated Index Provider and any material conflicts of interest resulting therefrom, regardless of whether the Affiliated Index Provider is a type of affiliate specified in Item 10.

15. To the extent the Self-Indexing Funds transact with an Affiliated Person of the Adviser or Sub-Adviser, such transactions will comply with the Act, the rules thereunder and the terms and conditions of the requested order. In this regard, each Self-Indexing Fund's board of directors or trustees (''Board'') will periodically review the Self-Indexing Fund's use of an Affiliated Index Provider. Subject to the approval of the Self-Indexing Fund's Board, the Adviser, Affiliated Persons of the Adviser (''Adviser Affiliates'') and Affiliated Persons of any Sub-Adviser (''Sub-Adviser Affiliates'') may be authorized to provide custody, fund accounting and administration and transfer agency services to the Self-Indexing Funds. Any services provided by the Adviser, Adviser Affiliates, Sub-Adviser and Sub-Adviser Affiliates will be performed in accordance with the provisions of the Act, the rules under the Act and any relevant guidelines from the staff of the Commission.

16. In light of the foregoing, Applicants believe it is appropriate to allow the Self-Indexing Funds to be fully transparent in lieu of Policies and Procedures from the Prior Self-Indexing Orders discussed above.

17. The Shares of each Fund will be purchased and redeemed in Creation Units and generally on an in-kind basis. Except where the purchase or redemption will include cash under the limited circumstances specified below, purchasers will be required to purchase Creation Units by making an in-kind deposit of specified instruments (''Deposit Instruments''), and shareholders redeeming their Shares will receive an in-kind transfer of specified instruments (''Redemption Instruments'').[13] On any given Business Day, the names and quantities of the instruments that constitute the Deposit Instruments and the names and quantities of the instruments that constitute the Redemption Instruments will be identical, unless the Fund is Rebalancing (as defined below). In addition, the Deposit Instruments and the Redemption Instruments will each correspond pro rata to the positions in the Fund's portfolio (including cash positions)[14] except: (a) In the case of bonds, for minor differences when it is impossible to break up bonds beyond certain minimum sizes needed for transfer and settlement; (b) for minor differences when rounding is necessary to eliminate fractional shares or lots that are not tradeable round lots;[15] (c) TBA Transactions, short positions, derivatives and other positions that cannot be transferred in kind[16] will be excluded from the Deposit Instruments and the Redemption Instruments;[17](d) to the extent the Fund determines, on a given Business Day, to use a representative sampling of the Fund's portfolio;[18] or (e) for temporary periods, to effect changes in the Fund's portfolio as a result of the rebalancing of its Underlying Index (any such change, a

[10] *See, e.g.,* Rule 17j–1 under the Act and Section 204A under the Advisers Act and Rules 204A–1 and 206(4)–7 under the Advisers Act.

[11] The Adviser has also adopted or will adopt a code of ethics pursuant to Rule 17j–1 under the Act and Rule 204A–1 under the Advisers Act, which contains provisions reasonably necessary to prevent Access Persons (as defined in Rule 17j–1) from engaging in any conduct prohibited in Rule 17j–1 (''Code of Ethics'').

[12] The instruments and cash that the purchaser is required to deliver in exchange for the Creation Units it is purchasing is referred to as the ''Portfolio Deposit.''

[13] The Funds must comply with the federal securities laws in accepting Deposit Instruments and satisfying redemptions with Redemption Instruments, including that the Deposit Instruments and Redemption Instruments are sold in transactions that would be exempt from registration under the Securities Act of 1933 (''Securities Act''). In accepting Deposit Instruments and satisfying redemptions with Redemption Instruments that are restricted securities eligible for resale pursuant to rule 144A under the Securities Act, the Funds will comply with the conditions of rule 144A.

[14] The portfolio used for this purpose will be the same portfolio used to calculate the Fund's NAV for the Business Day.

[15] A tradeable round lot for a security will be the standard unit of trading in that particular type of security in its primary market.

[16] This includes instruments that can be transferred in kind only with the consent of the original counterparty to the extent the Fund does not intend to seek such consents.

[17] Because these instruments will be excluded from the Deposit Instruments and the Redemption Instruments, their value will be reflected in the determination of the Cash Amount (as defined below).

[18] A Fund may only use sampling for this purpose if the sample: (i) Is designed to generate performance that is highly correlated to the performance of the Fund's portfolio; (ii) consists entirely of instruments that are already included in the Fund's portfolio; and (iii) is the same for all Authorized Participants on a given Business Day.

''Rebalancing''). If there is a difference between the NAV attributable to a Creation Unit and the aggregate market value of the Deposit Instruments or Redemption Instruments exchanged for the Creation Unit, the party conveying instruments with the lower value will also pay to the other an amount in cash equal to that difference (the ''Cash Amount'').

18. Purchases and redemptions of Creation Units may be made in whole or in part on a cash basis, rather than in kind, solely under the following circumstances: (a) To the extent there is a Cash Amount; (b) if, on a given Business Day, the Fund announces before the open of trading that all purchases, all redemptions or all purchases and redemptions on that day will be made entirely in cash; (c) if, upon receiving a purchase or redemption order from an Authorized Participant, the Fund determines to require the purchase or redemption, as applicable, to be made entirely in cash; [19] (d) if, on a given Business Day, the Fund requires all Authorized Participants purchasing or redeeming Shares on that day to deposit or receive (as applicable) cash in lieu of some or all of the Deposit Instruments or Redemption Instruments, respectively, solely because: (i) Such instruments are not eligible for transfer through either the NSCC or DTC (defined below); or (ii) in the case of Foreign Funds holding non-U.S. investments, such instruments are not eligible for trading due to local trading restrictions, local restrictions on securities transfers or other similar circumstances; or (e) if the Fund permits an Authorized Participant to deposit or receive (as applicable) cash in lieu of some or all of the Deposit Instruments or Redemption Instruments, respectively, solely because: (i) Such instruments are, in the case of the purchase of a Creation Unit, not available in sufficient quantity; (ii) such instruments are not eligible for trading by an Authorized Participant or the investor on whose behalf the Authorized Participant is acting; or (iii) a holder of Shares of a Foreign Fund holding non-U.S. investments would be subject to unfavorable income tax treatment if the holder receives redemption proceeds in kind.[20]

19. Creation Units will consist of specified large aggregations of Shares, e.g., at least 25,000 Shares. Applicants expect that the initial price of a Creation Unit will range from $750,000 to $10 million. All orders to purchase Creation Units must be placed with the Distributor by or through an ''Authorized Participant'' which is either (1) a ''Participating Party,'' i.e., a broker-dealer or other participant in the Continuous Net Settlement System of the NSCC, a clearing agency registered with the Commission, or (2) a participant in The Depository Trust Company (''DTC'') (''DTC Participant''), which, in either case, has signed a participant agreement with the Distributor. The Distributor will be responsible for transmitting the orders to the Funds and will furnish to those placing such orders confirmation that the orders have been accepted, but applicants state that the Distributor may reject any order which is not submitted in proper form.

20. Each Business Day, before the open of trading on the Listing Exchange, each Fund will cause to be published through the NSCC the names and quantities of the instruments comprising the Deposit Instruments and the Redemption Instruments, as well as the estimated Cash Amount (if any), for that day. The list of Deposit Instruments and Redemption Instruments will apply until a new list is announced on the following Business Day, and there will be no intra-day changes to the list except to correct errors in the published list. Each Listing Exchange will disseminate, every 15 seconds during regular Exchange trading hours, through the facilities of the Consolidated Tape Association, an amount for each Fund stated on a per individual Share basis representing the sum of (i) the estimated Cash Amount and (ii) the current value of the Deposit Instruments.

21. Transaction expenses, including operational processing and brokerage costs, will be incurred by a Fund when investors purchase or redeem Creation Units in-kind and such costs have the potential to dilute the interests of the Fund's existing shareholders. Each Fund will impose purchase or redemption transaction fees (''Transaction Fees'') in connection with effecting such purchases or redemptions of Creation Units. In all cases, such Transaction Fees will be limited in accordance with requirements of the Commission applicable to management investment companies offering redeemable securities. Since the Transaction Fees are intended to defray the transaction expenses as well as to prevent possible shareholder dilution resulting from the purchase or redemption of Creation Units, the Transaction Fees will be borne only by such purchasers or redeemers.[21] The Distributor will be responsible for delivering the Fund's prospectus to those persons acquiring Shares in Creation Units and for maintaining records of both the orders placed with it and the confirmations of acceptance furnished by it. In addition, the Distributor will maintain a record of the instructions given to the applicable Fund to implement the delivery of its Shares.

22. Shares of each Fund will be listed and traded individually on an Exchange. It is expected that one or more member firms of an Exchange will be designated to act as a market maker (each, a ''Market Maker'') and maintain a market for Shares trading on the Exchange. Prices of Shares trading on an Exchange will be based on the current bid/offer market. Transactions involving the sale of Shares on an Exchange will be subject to customary brokerage commissions and charges.

23. Applicants expect that purchasers of Creation Units will include institutional investors and arbitrageurs. Market Makers, acting in their roles to provide a fair and orderly secondary market for the Shares, may from time to time find it appropriate to purchase or redeem Creation Units. Applicants expect that secondary market purchasers of Shares will include both institutional and retail investors.[22] The price at which Shares trade will be disciplined by arbitrage opportunities created by the option continually to purchase or redeem Shares in Creation Units, which should help prevent Shares from trading at a material discount or premium in relation to their NAV.

24. Shares will not be individually redeemable, and owners of Shares may

[19] In determining whether a particular Fund will sell or redeem Creation Units entirely on a cash or in-kind basis (whether for a given day or a given order), the key consideration will be the benefit that would accrue to the Fund and its investors. For instance, in bond transactions, the Adviser may be able to obtain better execution than Share purchasers because of the Adviser's size, experience and potentially stronger relationships in the fixed income markets. Purchases of Creation Units either on an all cash basis or in-kind are expected to be neutral to the Funds from a tax perspective. In contrast, cash redemptions typically require selling portfolio holdings, which may result in adverse tax consequences for the remaining Fund shareholders that would not occur with an in-kind redemption. As a result, tax consideration may warrant in-kind redemptions.

[20] A ''custom order'' is any purchase or redemption of Shares made in whole or in part on a cash basis in reliance on clause (e)(i) or (e)(ii).

[21] Where a Fund permits an in-kind purchaser to substitute cash-in-lieu of depositing one or more of the requisite Deposit Instruments, the purchaser may be assessed a higher Transaction Fee to cover the cost of purchasing such Deposit Instruments.

[22] Shares will be registered in book-entry form only. DTC or its nominee will be the record or registered owner of all outstanding Shares. Beneficial ownership of Shares will be shown on the records of DTC or the DTC Participants.

acquire those Shares from the Fund, or tender such Shares for redemption to the Fund, in Creation Units only. To redeem, an investor must accumulate enough Shares to constitute a Creation Unit. Redemption requests must be placed through an Authorized Participant. A redeeming investor may pay a Transaction Fee, calculated in the same manner as a Transaction Fee payable in connection with purchases of Creation Units.

25. Neither the Trust nor any Fund will be advertised or marketed or otherwise held out as a traditional open-end investment company or a ''mutual fund.'' Instead, each such Fund will be marketed as an ''ETF.'' All marketing materials that describe the features or method of obtaining, buying or selling Creation Units, or Shares traded on an Exchange, or refer to redeemability, will prominently disclose that Shares are not individually redeemable and will disclose that the owners of Shares may acquire those Shares from the Fund or tender such Shares for redemption to the Fund in Creation Units only. The Funds will provide copies of their annual and semi-annual shareholder reports to DTC Participants for distribution to beneficial owners of Shares.

Applicants' Legal Analysis

1. Applicants request an order under section 6(c) of the Act for an exemption from sections 2(a)(32), 5(a)(1), 22(d), and 22(e) of the Act and rule 22c–1 under the Act, under section 12(d)(1)(J) of the Act for an exemption from sections 12(d)(1)(A) and (B) of the Act, and under sections 6(c) and 17(b) of the Act for an exemption from sections 17(a)(1) and 17(a)(2) of the Act.

2. Section 6(c) of the Act provides that the Commission may exempt any person, security or transaction, or any class of persons, securities or transactions, from any provision of the Act, if and to the extent that such exemption is necessary or appropriate in the public interest and consistent with the protection of investors and the purposes fairly intended by the policy and provisions of the Act. Section 17(b) of the Act authorizes the Commission to exempt a proposed transaction from section 17(a) of the Act if evidence establishes that the terms of the transaction, including the consideration to be paid or received, are reasonable and fair and do not involve overreaching on the part of any person concerned, and the proposed transaction is consistent with the policies of the registered investment company and the general provisions of the Act. Section 12(d)(1)(J) of the Act provides that the Commission may exempt any person, security, or transaction, or any class or classes of persons, securities or transactions, from any provisions of section 12(d)(1) if the exemption is consistent with the public interest and the protection of investors.

Sections 5(a)(1) and 2(a)(32) of the Act

3. Section 5(a)(1) of the Act defines an ''open-end company'' as a management investment company that is offering for sale or has outstanding any redeemable security of which it is the issuer. Section 2(a)(32) of the Act defines a redeemable security as any security, other than short-term paper, under the terms of which the owner, upon its presentation to the issuer, is entitled to receive approximately a proportionate share of the issuer's current net assets, or the cash equivalent. Because Shares will not be individually redeemable, applicants request an order that would permit the Funds to register as open-end management investment companies and issue Shares that are redeemable in Creation Units only. Applicants state that investors may purchase Shares in Creation Units and redeem Creation Units from each Fund. Applicants further state that because Creation Units may always be purchased and redeemed at NAV, the price of Shares on the secondary market should not vary materially from NAV.

Section 22(d) of the Act and Rule 22c–1 Under the Act

4. Section 22(d) of the Act, among other things, prohibits a dealer from selling a redeemable security that is currently being offered to the public by or through an underwriter, except at a current public offering price described in the prospectus. Rule 22c–1 under the Act generally requires that a dealer selling, redeeming or repurchasing a redeemable security do so only at a price based on its NAV. Applicants state that secondary market trading in Shares will take place at negotiated prices, not at a current offering price described in a Fund's prospectus, and not at a price based on NAV. Thus, purchases and sales of Shares in the secondary market will not comply with section 22(d) of the Act and rule 22c–1 under the Act. Applicants request an exemption under section 6(c) from these provisions.

5. Applicants assert that the concerns sought to be addressed by section 22(d) of the Act and rule 22c–1 under the Act with respect to pricing are equally satisfied by the proposed method of pricing Shares. Applicants maintain that while there is little legislative history regarding section 22(d), its provisions, as well as those of rule 22c–1, appear to have been designed to (a) prevent dilution caused by certain riskless-trading schemes by principal underwriters and contract dealers, (b) prevent unjust discrimination or preferential treatment among buyers, and (c) ensure an orderly distribution of investment company shares by eliminating price competition from dealers offering shares at less than the published sales price and repurchasing shares at more than the published redemption price.

6. Applicants believe that none of these purposes will be thwarted by permitting Shares to trade in the secondary market at negotiated prices. Applicants state that (a) secondary market trading in Shares does not involve a Fund as a party and will not result in dilution of an investment in Shares, and (b) to the extent different prices exist during a given trading day, or from day to day, such variances occur as a result of third-party market forces, such as supply and demand. Therefore, applicants assert that secondary market transactions in Shares will not lead to discrimination or preferential treatment among purchasers. Finally, applicants contend that the price at which Shares trade will be disciplined by arbitrage opportunities created by the option continually to purchase or redeem Shares in Creation Units, which should help prevent Shares from trading at a material discount or premium in relation to their NAV.

Section 22(e)

7. Section 22(e) of the Act generally prohibits a registered investment company from suspending the right of redemption or postponing the date of payment of redemption proceeds for more than seven days after the tender of a security for redemption. Applicants state that settlement of redemptions for Foreign Funds will be contingent not only on the settlement cycle of the United States market, but also on current delivery cycles in local markets for underlying foreign Portfolio Securities held by a Foreign Fund. Applicants state that the delivery cycles currently practicable for transferring Redemption Instruments to redeeming investors, coupled with local market holiday schedules, may require a delivery process of up to fifteen (15) calendar days.[23] Accordingly, with respect to Foreign Funds only, Applicants hereby request relief under section 6(c) from the requirement imposed by section 22(e) to allow

[23] Certain countries in which a Fund may invest have historically had settlement periods of up to fifteen (15) calendar days.

Foreign Funds to pay redemption proceeds within fifteen (15) calendar days following the tender of Creation Units for redemption.[24]

8. Applicants believe that Congress adopted section 22(e) to prevent unreasonable, undisclosed or unforeseen delays in the actual payment of redemption proceeds. Applicants propose that allowing redemption payments for Creation Units of a Foreign Fund to be made within fifteen calendar days would not be inconsistent with the spirit and intent of section 22(e). Applicants suggest that a redemption payment occurring within fifteen calendar days following a redemption request would adequately afford investor protection.

9. Applicants are not seeking relief from section 22(e) with respect to Foreign Funds that do not effect creations and redemptions of Creation Units in-kind.

Section 12(d)(1)

10. Section 12(d)(1)(A) of the Act prohibits a registered investment company from acquiring securities of an investment company if such securities represent more than 3% of the total outstanding voting stock of the acquired company, more than 5% of the total assets of the acquiring company, or, together with the securities of any other investment companies, more than 10% of the total assets of the acquiring company. Section 12(d)(1)(B) of the Act prohibits a registered open-end investment company, its principal underwriter and any other broker-dealer from knowingly selling the investment company's shares to another investment company if the sale will cause the acquiring company to own more than 3% of the acquired company's voting stock, or if the sale will cause more than 10% of the acquired company's voting stock to be owned by investment companies generally.

11. Applicants request an exemption to permit registered management investment companies and unit investment trusts (''UITs'') that are not advised or sponsored by the Adviser, and not part of the same ''group of investment companies,'' as defined in section 12(d)(1)(G)(ii) of the Act as the Funds (such management investment companies are referred to as ''Investing Management Companies,'' such UITs are referred to as ''Investing Trusts,'' and Investing Management Companies and Investing Trusts are collectively referred to as ''Funds of Funds''), to acquire Shares beyond the limits of section 12(d)(1)(A) of the Act; and the Funds, and any principal underwriter for the Funds, and/or any Broker registered Exchange Act, to sell Shares to Funds of Funds beyond the limits of section 12(d)(1)(B) of the Act.

12. Each Investing Management Company will be advised by an investment adviser within the meaning of section 2(a)(20)(A) of the Act (the ''Fund of Funds Adviser'') and may be sub-advised by investment advisers within the meaning of section 2(a)(20)(B) of the Act (each a ''Fund of Funds Sub-Adviser''). Any investment adviser to an Investing Management Company will be registered under the Advisers Act. Each Investing Trust will be sponsored by a sponsor (''Sponsor'').

13. Applicants submit that the proposed conditions to the requested relief adequately address the concerns underlying the limits in sections 12(d)(1)(A) and (B), which include concerns about undue influence by a fund of funds over underlying funds, excessive layering of fees and overly complex fund structures. Applicants believe that the requested exemption is consistent with the public interest and the protection of investors.

14. Applicants believe that neither a Fund of Funds nor a Fund of Funds Affiliate would be able to exert undue influence over a Fund.[25] To limit the control that a Fund of Funds may have over a Fund, applicants propose a condition prohibiting a Fund of Funds Adviser or Sponsor, any person controlling, controlled by, or under common control with a Fund of Funds Adviser or Sponsor, and any investment company and any issuer that would be an investment company but for sections 3(c)(1) or 3(c)(7) of the Act that is advised or sponsored by a Fund of Funds Adviser or Sponsor, or any person controlling, controlled by, or under common control with a Fund of Funds Adviser or Sponsor (''Fund of Funds Advisory Group'') from controlling (individually or in the aggregate) a Fund within the meaning of section 2(a)(9) of the Act. The same prohibition would apply to any Fund of Funds Sub-Adviser, any person controlling, controlled by or under common control with the Fund of Funds Sub-Adviser, and any investment company or issuer that would be an investment company but for sections 3(c)(1) or 3(c)(7) of the Act (or portion of such investment company or issuer) advised or sponsored by the Fund of Funds Sub-Adviser or any person controlling, controlled by or under common control with the Fund of Funds Sub-Adviser (''Fund of Funds Sub-Advisory Group'').

15. Applicants propose other conditions to limit the potential for undue influence over the Funds, including that no Fund of Funds or Fund of Funds Affiliate (except to the extent it is acting in its capacity as an investment adviser to a Fund) will cause a Fund to purchase a security in an offering of securities during the existence of an underwriting or selling syndicate of which a principal underwriter is an Underwriting Affiliate (''Affiliated Underwriting''). An ''Underwriting Affiliate'' is a principal underwriter in any underwriting or selling syndicate that is an officer, director, member of an advisory board, Fund of Funds Adviser, Fund of Funds Sub-Adviser, employee or Sponsor of the Fund of Funds, or a person of which any such officer, director, member of an advisory board, Fund of Funds Adviser or Fund of Funds Sub-Adviser, employee or Sponsor is an affiliated person (except that any person whose relationship to the Fund is covered by section 10(f) of the Act is not an Underwriting Affiliate).

16. Applicants do not believe that the proposed arrangement will involve excessive layering of fees. The board of directors or trustees of any Investing Management Company, including a majority of the directors or trustees who are not ''interested persons'' within the meaning of section 2(a)(19) of the Act (''disinterested directors or trustees''), will find that the advisory fees charged under the contract are based on services provided that will be in addition to, rather than duplicative of, services provided under the advisory contract of any Fund in which the Investing Management Company may invest. In addition, under condition B.5., a Fund of Funds Adviser, or a Fund of Funds' trustee or Sponsor, as applicable, will waive fees otherwise payable to it by the Fund of Funds in an amount at least equal to any compensation (including fees received pursuant to any plan adopted by a Fund under rule 12b-1 under the Act) received from a Fund by the Fund of Funds Adviser, trustee or Sponsor or an affiliated person of the Fund of Funds Adviser, trustee or Sponsor, other than any advisory fees

[24] Applicants acknowledge that no relief obtained from the requirements of section 22(e) will affect any obligations Applicants may otherwise have under rule 15c6–1 under the Exchange Act requiring that most securities transactions be settled within three business days of the trade date.

[25] A ''Fund of Funds Affiliate'' is a Fund of Funds Adviser, Fund of Funds Sub-Adviser, Sponsor, promoter, and principal underwriter of a Fund of Funds, and any person controlling, controlled by, or under common control with any of those entities. A ''Fund Affiliate'' is an investment adviser, promoter, or principal underwriter of a Fund and any person controlling, controlled by or under common control with any of these entities.

paid to the Fund of Funds Adviser, trustee or Sponsor or its affiliated person by a Fund, in connection with the investment by the Fund of Funds in the Fund. Applicants state that any sales charges and/or service fees charged with respect to shares of a Fund of Funds will not exceed the limits applicable to a fund of funds as set forth in NASD Conduct Rule 2830.[26]

17. Applicants submit that the proposed arrangement will not create an overly complex fund structure. Applicants note that no Fund will acquire securities of any investment company or company relying on section 3(c)(1) or 3(c)(7) of the Act in excess of the limits contained in section 12(d)(1)(A) of the Act, except to the extent permitted by exemptive relief from the Commission permitting the Fund to purchase shares of other investment companies for short-term cash management purposes. To ensure a Fund of Funds is aware of the terms and conditions of the requested order, the Fund of Funds will enter into an agreement with the Fund (''FOF Participation Agreement''). The FOF Participation Agreement will include an acknowledgement from the Fund of Funds that it may rely on the order only to invest in the Funds and not in any other investment company.

18. Applicants also note that a Fund may choose to reject a direct purchase of Shares in Creation Units by a Fund of Funds. To the extent that a Fund of Funds purchases Shares in the secondary market, a Fund would still retain its ability to reject any initial investment by a Fund of Funds in excess of the limits of section 12(d)(1)(A) by declining to enter into a FOF Participation Agreement with the Fund of Funds.

Sections 17(a)(1) and (2) of the Act

19. Sections 17(a)(1) and (2) of the Act generally prohibit an affiliated person of a registered investment company, or an affiliated person of such a person, from selling any security to or purchasing any security from the company. Section 2(a)(3) of the Act defines ''affiliated person'' of another person to include (a) any person directly or indirectly owning, controlling or holding with power to vote 5% or more of the outstanding voting securities of the other person, (b) any person 5% or more of whose outstanding voting securities are directly or indirectly owned, controlled or held with the power to vote by the other person, and (c) any person directly or indirectly controlling, controlled by or under common control with the other person. Section 2(a)(9) of the Act defines ''control'' as the power to exercise a controlling influence over the management or policies of a company, and provides that a control relationship will be presumed where one person owns more than 25% of a company's voting securities. The Funds may be deemed to be controlled by the Adviser or an entity controlling, controlled by or under common control with the Adviser and hence affiliated persons of each other. In addition, the Funds may be deemed to be under common control with any other registered investment company (or series thereof) advised by an Adviser or an entity controlling, controlled by or under common control with an Adviser (an ''Affiliated Fund''). Any investor, including Market Makers, owning 5% or holding in excess of 25% of the Trust or such Funds, may be deemed affiliated persons of the Trust or such Funds. In addition, an investor could own 5% or more, or in excess of 25% of the outstanding shares of one or more Affiliated Funds making that investor a Second-Tier Affiliate of the Funds.

20. Applicants request an exemption from sections 17(a)(1) and 17(a)(2) of the Act pursuant to sections 6(c) and 17(b) of the Act to permit persons that are Affiliated Persons of the Funds, or Second-Tier Affiliates of the Funds, solely by virtue of one or more of the following: (a) holding 5% or more, or in excess of 25%, of the outstanding Shares of one or more Funds; (b) an affiliation with a person with an ownership interest described in (a); or (c) holding 5% or more, or more than 25%, of the shares of one or more Affiliated Funds, to effectuate purchases and redemptions ''in-kind.''

21. Applicants assert that no useful purpose would be served by prohibiting such affiliated persons from making ''in-kind'' purchases or ''in-kind'' redemptions of Shares of a Fund in Creation Units. Both the deposit procedures for ''in-kind'' purchases of Creation Units and the redemption procedures for ''in-kind'' redemptions of Creation Units will be effected in exactly the same manner for all purchases and redemptions, regardless of size or number. There will be no discrimination between purchasers or redeemers. Deposit Instruments and Redemption Instruments for each Fund will be valued in the identical manner as those Portfolio Securities currently held by such Fund and the valuation of the Deposit Instruments and Redemption Instruments will be made in an identical manner regardless of the identity of the purchaser or redeemer. Applicants do not believe that ''in-kind'' purchases and redemptions will result in abusive self-dealing or overreaching, but rather assert that such procedures will be implemented consistently with each Fund's objectives and with the general purposes of the Act. Applicants believe that ''in-kind'' purchases and redemptions will be made on terms reasonable to Applicants and any affiliated persons because they will be valued pursuant to verifiable objective standards. The method of valuing Portfolio Securities held by a Fund is identical to that used for calculating ''in-kind'' purchase or redemption values and therefore creates no opportunity for affiliated persons or Second-Tier Affiliates of Applicants to effect a transaction detrimental to the other holders of Shares of that Fund. Similarly, Applicants submit that, by using the same standards for valuing Portfolio Securities held by a Fund as are used for calculating ''in-kind'' redemptions or purchases, the Fund will ensure that its NAV will not be adversely affected by such securities transactions. Applicants also note that the ability to take deposits and make redemptions ''in-kind'' will help each Fund to track closely its Underlying Index and therefore aid in achieving the Fund's objectives.

22. Applicants also seek relief under sections 6(c) and 17(b) from section 17(a) to permit a Fund that is an affiliated person, or an affiliated person of an affiliated person, of a Fund of Funds to sell its Shares to and redeem its Shares from a Fund of Funds, and to engage in the accompanying in-kind transactions with the Fund of Funds.[27] Applicants state that the terms of the transactions are fair and reasonable and do not involve overreaching. Applicants note that any consideration paid by a Fund of Funds for the purchase or redemption of Shares directly from a Fund will be based on the NAV of the

[26] Any references to NASD Conduct Rule 2830 include any successor or replacement FINRA rule to NASD Conduct Rule 2830.

[27] Although applicants believe that most Funds of Funds will purchase Shares in the secondary market and will not purchase Creation Units directly from a Fund, a Fund of Funds might seek to transact in Creation Units directly with a Fund that is an affiliated person of a Fund of Funds. To the extent that purchases and sales of Shares occur in the secondary market and not through principal transactions directly between a Fund of Funds and a Fund, relief from Section 17(a) would not be necessary. However, the requested relief would apply to direct sales of Shares in Creation Units by a Fund to a Fund of Funds and redemptions of those Shares. Applicants are not seeking relief from Section 17(a) for, and the requested relief will not apply to, transactions where a Fund could be deemed an affiliated person, or an affiliated person of an affiliated person of a Fund of Funds because an Adviser or an entity controlling, controlled by or under common control with an Adviser provides investment advisory services to that Fund of Funds.

Fund.[28] Applicants believe that any proposed transactions directly between the Funds and Funds of Funds will be consistent with the policies of each Fund of Funds. The purchase of Creation Units by a Fund of Funds directly from a Fund will be accomplished in accordance with the investment restrictions of any such Fund of Funds and will be consistent with the investment policies set forth in the Fund of Funds' registration statement. Applicants also state that the proposed transactions are consistent with the general purposes of the Act and are appropriate in the public interest.

Applicants' Conditions

Applicants agree that any order of the Commission granting the requested relief will be subject to the following conditions:

A. ETF Relief

1. The requested relief to permit ETF operations will expire on the effective date of any Commission rule under the Act that provides relief permitting the operation of index-based ETFs.

2. As long as a Fund operates in reliance on the requested order, Shares of such Fund will be listed on an Exchange.

3. Neither the Trust nor any Fund will be advertised or marketed as an open-end investment company or a mutual fund. Any advertising material that describes the purchase or sale of Creation Units or refers to redeemability will prominently disclose that Shares are not individually redeemable and that owners of Shares may acquire those Shares from the Fund and tender those Shares for redemption to a Fund in Creation Units only.

4. The Web site, which is and will be publicly accessible at no charge, will contain, on a per Share basis for each Fund, the prior Business Day's NAV and the market closing price or the midpoint of the bid/ask spread at the time of the calculation of such NAV (''Bid/Ask Price''), and a calculation of the premium or discount of the market closing price or Bid/Ask Price against such NAV.

5. Each Self-Indexing Fund, Long/Short Fund and 130/30 Fund will post on the Web site on each Business Day, before commencement of trading of Shares on the Exchange, the Fund's Portfolio Holdings.

6. No Adviser or any Sub-Adviser, directly or indirectly, will cause any Authorized Participant (or any investor on whose behalf an Authorized Participant may transact with the Fund) to acquire any Deposit Instrument for a Fund through a transaction in which the Fund could not engage directly.

B. Section 12(d)(1) Relief

1. The members of a Fund of Funds' Advisory Group will not control (individually or in the aggregate) a Fund within the meaning of section 2(a)(9) of the Act. The members of a Fund of Funds' Sub-Advisory Group will not control (individually or in the aggregate) a Fund within the meaning of section 2(a)(9) of the Act. If, as a result of a decrease in the outstanding voting securities of a Fund, the Fund of Funds' Advisory Group or the Fund of Funds' Sub-Advisory Group, each in the aggregate, becomes a holder of more than 25 percent of the outstanding voting securities of a Fund, it will vote its Shares of the Fund in the same proportion as the vote of all other holders of the Fund's Shares. This condition does not apply to the Fund of Funds' Sub-Advisory Group with respect to a Fund for which the Fund of Funds' Sub-Adviser or a person controlling, controlled by or under common control with the Fund of Funds' Sub-Adviser acts as the investment adviser within the meaning of section 2(a)(20)(A) of the Act.

2. No Fund of Funds or Fund of Funds Affiliate will cause any existing or potential investment by the Fund of Funds in a Fund to influence the terms of any services or transactions between the Fund of Funds or Fund of Funds Affiliate and the Fund or a Fund Affiliate.

3. The board of directors or trustees of an Investing Management Company, including a majority of the disinterested directors or trustees, will adopt procedures reasonably designed to ensure that the Fund of Funds Adviser and Fund of Funds Sub-Adviser are conducting the investment program of the Investing Management Company without taking into account any consideration received by the Investing Management Company or a Fund of Funds Affiliate from a Fund or Fund Affiliate in connection with any services or transactions.

4. Once an investment by a Fund of Funds in the securities of a Fund exceeds the limits in section 12(d)(1)(A)(i) of the Act, the Board of the Fund, including a majority of the directors or trustees who are not ''interested persons'' within the meaning of Section 2(a)(19) of the Act (''non-interested Board members''), will determine that any consideration paid by the Fund to the Fund of Funds or a Fund of Funds Affiliate in connection with any services or transactions: (i) Is fair and reasonable in relation to the nature and quality of the services and benefits received by the Fund; (ii) is within the range of consideration that the Fund would be required to pay to another unaffiliated entity in connection with the same services or transactions; and (iii) does not involve overreaching on the part of any person concerned. This condition does not apply with respect to any services or transactions between a Fund and its investment adviser(s), or any person controlling, controlled by or under common control with such investment adviser(s).

5. The Fund of Funds Adviser, or trustee or Sponsor of an Investing Trust, as applicable, will waive fees otherwise payable to it by the Fund of Funds in an amount at least equal to any compensation (including fees received pursuant to any plan adopted by a Fund under rule 12b-l under the Act) received from a Fund by the Fund of Funds Adviser, or trustee or Sponsor of the Investing Trust, or an affiliated person of the Fund of Funds Adviser, or trustee or Sponsor of the Investing Trust, other than any advisory fees paid to the Fund of Funds Adviser, trustee or Sponsor of an Investing Trust, or its affiliated person by the Fund, in connection with the investment by the Fund of Funds in the Fund. Any Fund of Funds Sub-Adviser will waive fees otherwise payable to the Fund of Funds Sub-Adviser, directly or indirectly, by the Investing Management Company in an amount at least equal to any compensation received from a Fund by the Fund of Funds Sub-Adviser, or an affiliated person of the Fund of Funds Sub-Adviser, other than any advisory fees paid to the Fund of Funds Sub-Adviser or its affiliated person by the Fund, in connection with the investment by the Investing Management Company in the Fund made at the direction of the Fund of Funds Sub-Adviser. In the event that the Fund of Funds Sub-Adviser waives fees, the benefit of the waiver will be passed through to the Investing Management Company.

6. No Fund of Funds or Fund of Funds Affiliate (except to the extent it is acting in its capacity as an investment adviser to a Fund) will cause a Fund to purchase a security in any Affiliated Underwriting.

7. The Board of a Fund, including a majority of the non-interested Board

[28] Applicants acknowledge that the receipt of compensation by (a) an affiliated person of a Fund of Funds, or an affiliated person of such person, for the purchase by the Fund of Funds of Shares of a Fund or (b) an affiliated person of a Fund, or an affiliated person of such person, for the sale by the Fund of its Shares to a Fund of Funds, may be prohibited by Section 17(e)(1) of the Act. The FOF Participation Agreement also will include this acknowledgment.

members, will adopt procedures reasonably designed to monitor any purchases of securities by the Fund in an Affiliated Underwriting, once an investment by a Fund of Funds in the securities of the Fund exceeds the limit of section 12(d)(1)(A)(i) of the Act, including any purchases made directly from an Underwriting Affiliate. The Board will review these purchases periodically, but no less frequently than annually, to determine whether the purchases were influenced by the investment by the Fund of Funds in the Fund. The Board will consider, among other things: (i) Whether the purchases were consistent with the investment objectives and policies of the Fund; (ii) how the performance of securities purchased in an Affiliated Underwriting compares to the performance of comparable securities purchased during a comparable period of time in underwritings other than Affiliated Underwritings or to a benchmark such as a comparable market index; and (iii) whether the amount of securities purchased by the Fund in Affiliated Underwritings and the amount purchased directly from an Underwriting Affiliate have changed significantly from prior years. The Board will take any appropriate actions based on its review, including, if appropriate, the institution of procedures designed to ensure that purchases of securities in Affiliated Underwritings are in the best interest of shareholders of the Fund.

8. Each Fund will maintain and preserve permanently in an easily accessible place a written copy of the procedures described in the preceding condition, and any modifications to such procedures, and will maintain and preserve for a period of not less than six years from the end of the fiscal year in which any purchase in an Affiliated Underwriting occurred, the first two years in an easily accessible place, a written record of each purchase of securities in Affiliated Underwritings once an investment by a Fund of Funds in the securities of the Fund exceeds the limit of section 12(d)(1)(A)(i) of the Act, setting forth from whom the securities were acquired, the identity of the underwriting syndicate's members, the terms of the purchase, and the information or materials upon which the Board's determinations were made.

9. Before investing in a Fund in excess of the limit in section 12(d)(1)(A), a Fund of Funds and the Trust will execute a FOF Participation Agreement stating without limitation that their respective boards of directors or trustees and their investment advisers, or trustee and Sponsor, as applicable, understand the terms and conditions of the order, and agree to fulfill their responsibilities under the order. At the time of its investment in Shares of a Fund in excess of the limit in section 12(d)(1)(A)(i), a Fund of Funds will notify the Fund of the investment. At such time, the Fund of Funds will also transmit to the Fund a list of the names of each Fund of Funds Affiliate and Underwriting Affiliate. The Fund of Funds will notify the Fund of any changes to the list of the names as soon as reasonably practicable after a change occurs. The Fund and the Fund of Funds will maintain and preserve a copy of the order, the FOF Participation Agreement, and the list with any updated information for the duration of the investment and for a period of not less than six years thereafter, the first two years in an easily accessible place.

10. Before approving any advisory contract under section 15 of the Act, the board of directors or trustees of each Investing Management Company including a majority of the disinterested directors or trustees, will find that the advisory fees charged under such contract are based on services provided that will be in addition to, rather than duplicative of, the services provided under the advisory contract(s) of any Fund in which the Investing Management Company may invest. These findings and their basis will be fully recorded in the minute books of the appropriate Investing Management Company.

11. Any sales charges and/or service fees charged with respect to shares of a Fund of Funds will not exceed the limits applicable to a fund of funds as set forth in NASD Conduct Rule 2830.

12. No Fund will acquire securities of an investment company or company relying on section 3(c)(1) or 3(c)(7) of the Act in excess of the limits contained in section 12(d)(1)(A) of the Act, except to the extent the Fund acquires securities of another investment company pursuant to exemptive relief from the Commission permitting the Fund to acquire securities of one or more investment companies for short-term cash management purposes.

For the Commission, by the Division of Investment Management, under delegated authority.

Kevin M. O'Neill,

Deputy Secretary.

[FR Doc. 2013–27908 Filed 11–20–13; 8:45 am]

BILLING CODE 8011–01–P

SECURITIES AND EXCHANGE COMMISSION

[Release No. 34–70887; File No. SR–NYSEArca–2013–123]

Self-Regulatory Organizations; NYSE Arca, Inc.; Notice of Filing and Immediate Effectiveness of Proposed Rule Change Expanding Co-Location Services To Provide for a Lower-Latency 10 Gigabit Liquidity Center Network Connection in the Exchange's Data Center

November 15, 2013.

Pursuant to Section 19(b)(1) [1] of the Securities Exchange Act of 1934 (the ''Act'') [2] and Rule 19b–4 thereunder,[3] notice is hereby given that, on November 7, 2013, NYSE Arca, Inc. (the ''Exchange'' or ''NYSE Arca'') filed with the Securities and Exchange Commission (the ''Commission'') the proposed rule change as described in Items I and II below, which Items have been prepared by the self-regulatory organization. The Commission is publishing this notice to solicit comments on the proposed rule change from interested persons.

I. Self-Regulatory Organization's Statement of the Terms of Substance of the Proposed Rule Change

The Exchange proposes to expand its co-location services to provide for a lower-latency 10 gigabit (''Gb'') Liquidity Center Network (''LCN'') connection in the Exchange's data center. The text of the proposed rule change is available on the Exchange's Web site at *www.nyse.com,* at the principal office of the Exchange, and at the Commission's Public Reference Room.

II. Self-Regulatory Organization's Statement of the Purpose of, and Statutory Basis for, the Proposed Rule Change

In its filing with the Commission, the self-regulatory organization included statements concerning the purpose of, and basis for, the proposed rule change and discussed any comments it received on the proposed rule change. The text of those statements may be examined at the places specified in Item IV below. The Exchange has prepared summaries, set forth in sections A, B, and C below, of the most significant parts of such statements.

[1] 15 U.S.C. 78s(b)(1).

[2] 15 U.S.C. 78a.

[3] 17 CFR 240.19b–4.

A. Self-Regulatory Organization's Statement of the Purpose of, and the Statutory Basis for, the Proposed Rule Change

1. Purpose

The Exchange proposes to expand its co-location services to provide for a new lower-latency 10 Gb LCN connection, referred to as the ''LCN 10 Gb LX,'' in the Exchange's data center.[4] The Exchange will propose applicable fees for the proposed LCN 10 Gb LX connection via a separate proposed rule change.

The LCN is a local area network that is available in the data center and that provides Users with access to the Exchange's trading and execution systems and to the Exchange's proprietary market data products.[5] LCN access is currently available in one, 10 and 40 Gb bandwidth capacities.[6] The Exchange proposes to make a second 10 Gb LCN connection available in the Exchange's data center, the LCN 10 Gb LX, which would have a lower latency than the existing 10 Gb LCN connection. The LCN 10 Gb LX is expected to have latency levels similar to those of the existing 40 Gb LCN connection.

The Exchange is proposing this change in order to make an additional service available to its co-location Users and thereby satisfy demand for more efficient, lower latency connections. By utilizing ultra low-latency switches, the LCN 10 Gb LX connection would provide faster processing of messages sent to it in comparison to the existing, standard 10 Gb LCN connection. A switch is a type of network hardware that acts as the ''gatekeeper'' for a User's messaging (e.g., orders and quotes) sent to the Exchange's trading and execution system from the data center. As a consequence, Users needing only 10 Gb of bandwidth, but seeking faster processing of those messages, would have the option of utilizing the faster and more efficient LCN 10 Gb LX connection.[7] Both the proposed LCN 10 Gb LX connection and the 40 Gb LCN connection would represent the lowest latency currently available to Users.

As is the case with all Exchange co-location arrangements, (i) neither a User nor any of the User's customers would be permitted to submit orders directly to the Exchange unless such User or customer is an ETP Holder, an OTP Holder or OTP Firm, a Sponsored Participant or an agent thereof (e.g., a service bureau providing order entry services); (ii) use of the co-location services proposed herein would be completely voluntary and available to all Users on a non-discriminatory basis;[8] and (iii) a User would only incur one charge for the particular co-location service described herein, regardless of whether the User connects only to the Exchange or to the Exchange and one or both of its affiliates.[9]

The proposed change is not otherwise intended to address any other issues relating to co-location services and/or related fees, and the Exchange is not aware of any problems that Users would have in complying with the proposed change.

2. Statutory Basis

The Exchange believes that the proposed rule change is consistent with Section 6(b) of the Act,[10] in general, and furthers the objectives of Sections 6(b)(5) of the Act,[11] in particular, because it is designed to prevent fraudulent and manipulative acts and practices, to promote just and equitable principles of trade, to foster cooperation and coordination with persons engaged in regulating, clearing, settling, processing information with respect to, and facilitating transactions in securities, to remove impediments to, and perfect the mechanisms of, a free and open market and a national market system and, in general, to protect investors and the public interest and because it is not designed to permit unfair discrimination between customers, issuers, brokers, or dealers.

The proposed LCN 10 Gb LX connection would assist Users in making their network connectivity more efficient by reducing the time that messaging (e.g., orders and quotes) takes to reach the Exchange's trading and execution system once sent from their co-located servers and also the time that market data takes to reach their co-located servers. Speed and efficiency are important drivers of the U.S. securities markets. The Exchange is proposing to offer a co-location connectivity solution that would promote these drivers by providing state of the art technology that would be available to all Users. The Exchange believes that the LCN 10 Gb LX connection would remove impediments to and perfect the mechanism of a free and open market and a national market system by providing for improved speed and efficiency of message processing (e.g., orders and quotes) from Users' co-located servers.

The Exchange also believes that the reduction in latencies attributed to the LCN 10 Gb LX connection would serve to protect investors and the public interest by providing Users with the most efficient means of processing their messages sent to the Exchange's trading

[4] The Securities and Exchange Commission (''Commission'') initially approved the Exchange's co-location services in Securities Exchange Act Release No. 63275 (November 8, 2010), 75 FR 70048 (November 16, 2010) (SR–NYSEArca–2010–100) (the ''Original Co-location Approval''). The Exchange operates a data center in Mahwah, New Jersey (the ''data center'') from which it provides co-location services to Users. The Exchange's co-location services allow Users to rent space in the data center so they may locate their electronic servers in close physical proximity to the Exchange's trading and execution system. *See id.* at 70049.

[5] For purposes of the Exchange's co-location services, the term ''User'' includes (i) ETP Holders and Sponsored Participants that are authorized to obtain access to the NYSE Arca Marketplace pursuant to NYSE Arca Equities Rule 7.29 (*see* NYSE Arca Equities Rule 1.1(yy)); (ii) OTP Holders, OTP Firms and Sponsored Participants that are authorized to obtain access to the NYSE Arca System pursuant to NYSE Arca Options Rule 6.2A (*see* NYSE Arca Options Rule 6.1A(a)(19)); and (iii) non-ETP Holder, non-OTP Holder and non-OTP Firm broker-dealers and vendors that request to receive co-location services directly from the Exchange. *See, e.g.,* Securities Exchange Act Release Nos. 65970 (December 15, 2011), 76 FR 79242 (December 21, 2011) (SR–NYSEArca–2011–74) and 65971 (December 15, 2011), 76 FR 79267 (December 21, 2011) (SR–NYSEArca–2011–75). As specified in the NYSE Arca Equities and Options Fee Schedules, a User that incurs co-location fees for a particular co-location service pursuant thereto would not be subject to co-location fees for the same co-location service charged by the Exchange's affiliates NYSE MKT LLC and New York Stock Exchange LLC. *See* Securities Exchange Act Release No. 70173 (August 13, 2013), 78 FR 50459 (August 19, 2013) (SR–NYSEArca–2013–80).

[6] *See id.*

[7] The existing one Gb and 10 Gb LCN connections use the same type of switch and the existing 40 Gb LCN connection uses a second type of switch, but the switches are of uniform type within each offering. The proposed new LCN 10 Gb LX would use the same type of switch as the existing 40 Gb LCN. As a consequence, all co-located Users of a particular connectivity option receive the same latency in terms of the capabilities of their switches. At this time, the Exchange is not proposing to make low-latency switches available for 10 Gb CSP connections because, at least initially, User demand is not anticipated to exist. For a 10 Gb LX ''Bundle,'' SFTI and optic connections would be at standard 10 Gb latencies and only the LCN connections would be lower latency. The Exchange will include language in the NYSE Arca Equities and Options Fee Schedules in the related fee change to reflect this fact.

[8] As is currently the case, Users that receive co-location services from the Exchange will not receive any means of access to the Exchange's trading and execution systems that is separate from, or superior to, that of other Users. In this regard, all orders sent to the Exchange enter the Exchange's trading and execution systems through the same order gateway, regardless of whether the sender is co-located in the data center or not. In addition, co-located Users do not receive any market data or data service product that is not available to all Users, although Users that receive co-location services normally would expect reduced latencies in sending orders to, and receiving market data from, the Exchange.

[9] *See* SR–NYSEArca–2013–80, *supra* note 5 at 50459. The Exchange's affiliates have also submitted the same proposed rule change to provide for LCN 10 Gb LX connections. *See* SR–NYSEMKT–2013–92 and SR–NYSE–2013–73.

[10] 15 U.S.C. 78f(b).

[11] 15 U.S.C. 78f(b)(5).

and execution system from the data center.

The Exchange also believes that the proposed LCN 10 Gb LX connection is not designed to permit unfair discrimination between customers, issuers, brokers, or dealers because it would make a service available to Users that require the low-latency connection, but Users that do not require the lower latency could continue to request an existing 10 Gb LCN connection. The Exchange anticipates that the latency for the proposed LCN 10 Gb LX connection would be comparable to that of the existing 40 Gb LCN connection. Both the proposed LCN 10 Gb LX connection and the 40 Gb LCN connection would represent the lowest latency currently available to Users. The 40 Gb LCN provides the greatest bandwidth available on the Exchange, which is important for Users that have high order flow and ingest large amounts of market data and demand the greatest bandwidth possible to handle such message flow. Some Users, however, have systems that are not compatible with a 40 Gb LCN connection, or do not have bandwidth demands that would require a 40 Gb LCN connection, but still put a premium on reducing latency. The LCN 10 Gb LX is designed to meet this demand. Ultimately, a User will be able to choose between the proposed new LCN 10 Gb LX connection or the existing one, 10 and 40 Gb LCN connections to suit its needs. The Exchange believes that this would remove impediments to, and perfect the mechanisms of, a free and open market and a national market system and, in general, protect investors and the public interest because it would provide Users with additional choices with respect to the optimal bandwidth and latency for their connections.

Finally, the Exchange believes that it is subject to significant competitive forces, as described below in the Exchange's statement regarding the burden on competition.

For these reasons, the Exchange believes that the proposal is consistent with the Act.

B. Self-Regulatory Organization's Statement on Burden on Competition

In accordance with Section 6(b)(8) of the Act,[12] the Exchange believes that the proposed rule change will not impose any burden on competition that is not necessary or appropriate in furtherance of the purposes of the Act because any market participants that are otherwise capable of satisfying any applicable co-location fees, requirements, terms and conditions established from time to time by the Exchange could have access to the co-location services provided in the data center. This is also true because, in addition to the services being completely voluntary, they are available to all Users on an equal basis (i.e., the same range of products and services are available to all Users).

The Exchange also believes that the proposed LCN 10 Gb LX connection will not impose any burden on competition that is not necessary or appropriate in furtherance of the purposes of the Act because it will satisfy User demand for more efficient, lower-latency connections, but Users that do not require the lower latency could continue to request an existing LCN connection. Similarly, it will provide an option for a User whose system is not compatible with a 40 Gb LCN connection, or does not have bandwidth demands that would require a 40 Gb LCN connection, but that puts a premium on reducing latency. Additionally, the Exchange believes that the proposed change will enhance competition between competing marketplaces by enabling the Exchange to provide a low-latency connectivity option to Users that is similar to a service available on other markets. For example, The NASDAQ Stock Market LLC (''NASDAQ'') also makes a low-latency 10 Gb fiber connection option available to users of its co-location facilities.[13]

Finally, the Exchange notes that it operates in a highly competitive market in which market participants can readily favor competing venues if, for example, they deem fee levels at a particular venue to be excessive or if they determine that another venue's products and services are more competitive than on the Exchange. In such an environment, the Exchange must continually review, and consider adjusting, the services it offers as well as any corresponding fees and credits to remain competitive with other exchanges. For the reasons described above, the Exchange believes that the proposed rule change reflects this competitive environment.

C. Self-Regulatory Organization's Statement on Comments on the Proposed Rule Change Received From Members, Participants, or Others

No written comments were solicited or received with respect to the proposed rule change.

III. Date of Effectiveness of the Proposed Rule Change and Timing for Commission Action

The Exchange has filed the proposed rule change pursuant to Section 19(b)(3)(A)(iii) of the Act[14] and Rule 19b–4(f)(6) thereunder.[15] Because the foregoing proposed rule change does not: (1) Significantly affect the protection of investors or the public interest; (2) impose any significant burden on competition; and (3) by its terms does not become operative for 30 days after the date of this filing, or such shorter time as the Commission may designate if consistent with the protection of investors and the public interest, the proposed rule change has become effective pursuant to Section 19(b)(3)(A) of the Act[16] and Rule 19b–4(f)(6) thereunder.[17]

A proposed rule change filed under Rule 19b–4(f)(6)[18] normally does not become operative prior to 30 days after the date of the filing. However, pursuant to Rule 19b4(f)(6)(iii),[19] the Commission may designate a shorter time if such action is consistent with the protection of investors and the public interest. The Exchange has asked the Commission to waive the 30-day operative delay so that the proposal may become operative immediately upon filing. The Exchange requested waiver of the 30-day operative delay in order to immediately implement the proposed rule change so that Users may experience the benefits of such proposed change as soon as possible. The Exchange represented that a waiver of the operative delay would be in the public interest and would contribute to the protection of investors because it would permit additional Users to have access to lower-latency LCN connections, including those Users whose systems are not compatible with the existing 40 Gb LCN connection or who do not have bandwidth demands that would require a 40 Gb LCN connection. The Exchange further stated that the benefit of such lower latency would indirectly benefit customers of such Users and would serve to protect investors and the public interest, in that the LCN 10 Gb LX connection would

[12] 15 U.S.C. 78f(b)(8).

[13] *See* NASDAQ Rule 7034. NASDAQ refers to this connectivity option as the ''10 Gb Ultra'' connection. *See also* Securities Exchange Act Release No. 70129 (August 7, 2013), 78 FR 49308 (August 13, 2013) (SR–NASDAQ–2013–099).

[14] 15 U.S.C. 78s(b)(3)(A)(iii).

[15] 17 CFR 240.19b–4(f)(6).

[16] 15 U.S.C. 78s(b)(3)(A).

[17] 17 CFR 240.19b–4(f)(6). In addition, Rule 19b–4(f)(6)(iii) requires a self-regulatory organization to provide the Commission with written notice of its intent to file the proposed rule change, along with a brief description and text of the proposed rule change, at least five business days prior to the date of filing of the proposed rule change, or such shorter time as designated by the Commission. The Exchange has met this requirement.

[18] 17 CFR 240.19b–4(f)(6).

[19] 17 CFR 240.19b–4(f)(6)(iii).

provide Users with the most efficient means of processing customer orders that are sent to the Exchange's trading and execution system from the data center. The Exchange stated its belief that the proposed LCN 10 Gb LX connection does not raise any novel or unique issues or concerns. The Exchange further stated that it does not anticipate any negative consequence, whether for Users, the investing public or otherwise, as a result of granting a waiver of the operative delay. For the above reasons, the Commission believes waiver of the operative delay is appropriate and hereby grants the Exchange's request and designates the proposal operative upon filing.[20]

At any time within 60 days of the filing of such proposed rule change, the Commission summarily may temporarily suspend such rule change if it appears to the Commission that such action is necessary or appropriate in the public interest, for the protection of investors, or otherwise in furtherance of the purposes of the Act. If the Commission takes such action, the Commission shall institute proceedings under Section 19(b)(2)(B)[21] of the Act to determine whether the proposed rule change should be approved or disapproved.

IV. Solicitation of Comments

Interested persons are invited to submit written data, views, and arguments concerning the foregoing, including whether the proposed rule change is consistent with the Act. Comments may be submitted by any of the following methods:

Electronic Comments

- Use the Commission's Internet comment form (*http://www.sec.gov/rules/sro.shtml*); or
- Send an email to *rule-comments@sec.gov*. Please include File Number SR–NYSEArca–2013–123 on the subject line.

Paper Comments

- Send paper comments in triplicate to Elizabeth M. Murphy, Secretary, Securities and Exchange Commission, 100 F Street NE., Washington, DC 20549–1090.

All submissions should refer to File Number SR–NYSEArca–2013–123. This file number should be included on the subject line if email is used. To help the Commission process and review your comments more efficiently, please use only one method. The Commission will post all comments on the Commission's Internet Web site (*http://www.sec.gov/rules/sro.shtml)*. Copies of the submission, all subsequent amendments, all written statements with respect to the proposed rule change that are filed with the Commission, and all written communications relating to the proposed rule change between the Commission and any person, other than those that may be withheld from the public in accordance with the provisions of 5 U.S.C. 552, will be available for Web site viewing and printing in the Commission's Public Reference Room, 100 F Street NE., Washington, DC 20549, on official business days between the hours of 10:00 a.m. and 3:00 p.m. Copies of the filing also will be available for inspection and copying at the principal office of the Exchange. All comments received will be posted without change; the Commission does not edit personal identifying information from submissions. You should submit only information that you wish to make available publicly. All submissions should refer to File Number SR–NYSEArca–2013–123 and should be submitted on or before December 12, 2013.

For the Commission, by the Division of Trading and Markets, pursuant to delegated authority.[22]

Kevin M. O'Neill,

Deputy Secretary.

[FR Doc. 2013–27902 Filed 11–20–13; 8:45 am]

BILLING CODE 8011–01–P

[20] For purposes only of waiving the 30-day operative delay, the Commission has also considered the proposed rule's impact on efficiency, competition, and capital formation. *See* 15 U.S.C. 78c(f).

[21] 15 U.S.C. 78s(b)(2)(B).

[22] 17 CFR 200.30–3(a)(12).

SECURITIES AND EXCHANGE COMMISSION

[Release No. 34–70890; File No. SR–NSX–2013–21]

Self-Regulatory Organizations; National Stock Exchange, Inc.; Notice of Filing and Immediate Effectiveness of Proposed Rule Change To Amend Its Fee and Rebate Schedule

November 15, 2013.

Pursuant to Section 19(b)(1) of the Securities Exchange Act of 1934 (the ''Act '' or ''Exchange Act'')[1] and Rule 19b–4 thereunder,[2] notice is hereby given that on November 1, 2013, National Stock Exchange, Inc. (''NSX®'' or ''Exchange'') filed with the Securities and Exchange Commission (''SEC'' or ''Commission'') the proposed rule change, as described in Items I, II, and III below, which Items have been prepared by the Exchange. The Commission is publishing this notice to solicit comment on the proposed rule change from interested persons.

I. Self-Regulatory Organization's Statement of the Terms of Substance of the Proposed Rule Change

The Exchange is proposing to amend its Fee and Rebate Schedule (the ''Fee Schedule'') issued pursuant to Exchange Rule 16.1(a) in order to: change certain fees and rebates applicable to executions occurring through the ''Auto Ex'' mode of interaction (''Auto Ex Mode'')[3] with the NSX's trading system (the ''System'');[4] and discontinue charging certain fees to Exchange Equity Trading Permit (''ETP'')[5] Holders that are approved to use the Order Delivery mode of interaction with the System (''Order Delivery Mode'').[6] The Exchange is also proposing to eliminate the rebate of $0.0045 per executed share for Double Play Orders[7] in five select securities (the ''Select Securities'') directed to the CBOE Stock Exchange, Inc. (''CBSX'') and pay the standard rebate of $0.0015 per executed share applicable to Double Play Orders in all other securities priced at $1.00 and above. The Exchange also proposes to make certain non-material changes to the relevant text of the Fee Schedule to make certain terms used therein consistent with terms used in the Exchange's rules.

The text of the proposed rule change is available on the Exchange's Web site at *www.nsx.com,* at the Exchange's principal office, and at the Commission's Public Reference Room.

[1] 15 U.S.C. 78s(b)(1).

[2] 17 CFR 240.19b–4.

[3] *See* Exchange Rule 11.13 (Proprietary and Agency Orders; Modes of Order Interaction), paragraph(b)(1).

[4] Under NSX Rule 1.5, the term ''System'' is defined as the ''the electronic securities communications and trading facility . . .through which orders of Users are consolidated for ranking and execution.''

[5] NSX Rule defines the term ''ETP'' as an Equity Trading Permit issued by the Exchange for effecting approved securities transactions on the Exchange's Trading Facilities.

[6] *See* Exchange Rule 11.13(b)(2).

[7] NSX Rule 11.11(c)(10) defines a ''Double Play Order'' as a market or limit order for which an ETP Holder instructs the System to route to designated away Trading Centers which are approved by the Exchange from time to time without first exposing the order to the NSX Book. A Double Play Order that is not executed in full after routing away receives a new time stamp upon return to the Exchange and is ranked and maintained in the NSX Book in accordance with Rule 11.14(a).

II. Self-Regulatory Organization's Statement of the Purpose of, and Statutory Basis for, the Proposed Rule Change

In its filing with the Commission, the Exchange included statements concerning the purpose of, and statutory basis for, the proposed rule change and discussed any comments it received on the proposed rule change. The text of these statements may be examined at the places specified in Item IV below. The Exchange has prepared summaries, set forth in sections A, B, and C below, of the most significant parts of such statements.

A. Self-Regulatory Organization's Statement of the Purpose of, and Statutory Basis for, the Proposed Rule Change

1. Purpose

The Exchange proposes to amend Section I. (Auto Ex Mode); Section II. (Order Delivery); Section III.A. (Order Routing All Tapes); and Section IV. (Regulatory Fee) of its Fee Schedule to: implement new fees and rebates applicable to executions occurring through Auto Ex Mode; change Section II, Pricing Option A for Order Delivery Mode to discontinue a fee paid by ETP Holders approved to use the Order Delivery Mode (''Order Delivery Users'')[8] for each Order Delivery Notification in securities priced below $1.00; change Section III.A. to eliminate a rebate of $0.0045 per executed share paid to ETP Holders that direct Double Play Orders in the Select Securities to CBSX;[9] and, change Section IV. to discontinue a fee paid by Order Delivery Users for quotation updates in securities priced under $1.00. The Exchange also proposes to make certain non-material changes to the relevant text of the Fee Schedule to make certain terms used therein consistent with terms used in the Exchange's rules.

Amended Fees and Rebates Applicable to Auto Ex Mode

The Exchange is proposing several changes to the fees and rebates applicable under both the Fixed Fee Schedule and the Variable Fee Schedule applicable to executions occurring through the use of the Exchange's Auto Ex Mode. Specifically, the Exchange is proposing to adjust the volume thresholds that must be met before an ETP Holder can be eligible to pay the lowest fees for adding liquidity under the Fixed Fee Schedule. Currently, an ETP Holder must execute average daily volume (''ADV'') of at least 50,000 shares of added liquidity during a calendar month to qualify for the lowest fees under the Fixed Fee Schedule. The Exchange is proposing to change this volume threshold to ADV of at least 25,000 executed shares of added liquidity during a calendar month.

Along with this change to the qualifying volume threshold, the Exchange is proposing to adjust certain fees and rebates under both the Variable and Fixed Schedules. For ETP Holders with ADV within Tier 1 (up to 500,000 executed shares), the Exchange will reduce the fee for removing liquidity under the Fixed Fee Schedule from $0.0030 to $0.0029. In the Variable Fee Schedule, the Exchange proposes to increase the rebate to add liquidity in Tier 4 (ADV greater than[10] [sic] 5 million shares but less than 10 million shares) from $0.0028 under the current schedule to $0.0029. For Tier 5, which the Exchange proposes to amend and redefine as ADV of greater than [sic] 10 million shares executed, the Exchange proposes to increase the rebate for adding liquidity under the Variable Fee Schedule from $0.0029 to $0.0031.

The Exchange is further proposing to eliminate Tier 6, defined in the current Fixed and Variable Fee Schedules as ADV in excess of [sic] 20 million shares. The Exchange believes that the proposed amendment to increase the liquidity rebate under Tier 5 in the Variable Fee Schedule provides an appropriate rebate for ETP Holders with ADV in excess of 10 million shares, eliminating the need for the additional Tier 6 pricing. In addition, the Tier 5 ADV amounts are more reflective of the actual volume totals currently executed by ETP Holders. The Exchange submits that eliminating Tier 6 for both the Fixed and Variable Fee Schedules operates to simplify the Fee Schedule and provide a fee and rebate structure that better aligns with actual volume totals.

Additionally, the Exchange is proposing that, for Tape B securities[11] s only, each ETP Holder that executes ADV of at least 25,000 shares of added liquidity in Auto Ex Mode during a calendar month will receive a rebate of $0.0034 under the Fixed Fee Schedule per executed share, to apply across all ADV tiers of the Fixed Fee schedule. This amendment is intended to provide added incentive to ETP Holders to add liquidity in Tape B symbols on the Exchange, thereby increasing trading volumes and providing better execution opportunities for ETP Holders and their customers while maximizing the rebates available to ETP Holders for posting liquidity on the Exchange.

The Exchange believes that the proposed changes to certain fees and rebates applicable to Auto Ex Mode will operate to incentivize ETP Holders to post additional liquidity on the Exchange, increase trading opportunities for ETP Holders and their customers, and enhance the efficiency and cost-effectiveness of trading on the Exchange.

Amended Rebate for Double Play Orders in the Select Securities

The Exchange is proposing to amend the Fee Schedule to eliminate the enhanced rebate of $0.0045 per executed share that the Exchange currently pays to ETP Holders that direct Double Play Orders in the Select Securities to CBSX. Double Play Orders routed to and executed on CBSX will be subject to the rebate program applicable to all other securities priced at $1.00 and above under Section III.A. of the Fee Schedule, which provides for a rebate of $0.0015 per executed share.

The Exchange implemented the enhanced rebate of $0.0045 for executions of Double Play Orders in the Select Securities directed to CBSX as of July 1, 2013.[12] As of September 3, 2013, the Exchange amended the Fee Schedule to remove AMD and MU from

[8] A ''User'' is defined in Exchange Rule 1.5 as ''. . . any ETP Holder or Sponsored Participant who is authorized to obtain access to the System. . . .''

[9] The Select Securities are Apple Inc. (''AAPL''); Google Inc. (''GOOG''); Bank of America Corp (''BAC''); Nokia Corporation (''NOK''); and Sirius Radio, Inc. (''SIRI'').

[10] The Commission notes that the corresponding rule text refers to amounts greater than *or equal to* for the 5, 10, and 20 million share thresholds referenced herein, and that the rule text is controlling.

[11] The term ''Tape B'' securities refers to the designation assigned in the Consolidated Tape Association (''CTA'') Plan for reporting trades with respect to securities in Network B, which are securities listed on NYSE MKT, formerly NYSE Amex, and other exchanges. Tape B securities do not include securities listed on the New York Stock Exchange, Inc. or the NASDAQ Stock Market LLC.

[12] The Exchange filed for immediate effectiveness amendments to its Fee Schedule, effective July 1, 2013, that: Established the $0.0045 per share rebate for executions of Double Play Orders in the Select Securities on CBSX; clarified that the unexecuted portion of a Double Play Order that is returned to NSX after its initial route to CBSX and subsequently executed on the NSX or routed away in accordance with NSX Rule 11.15(a)(ii) is subject to the standard Fee Schedule; and clarified that the $0.0030 per share routing fee applies only to orders routed by the Exchange in accordance with NSX Rule 11.15(a)(ii). The Select Securities initially identified included Advanced Micro Devices, Inc. (''AMD'') and Micron Technology, Inc. (''MU'') in addition to BAC, NOK, and SIRI. *See* Exchange Act Release No. 34–69941; 78 FR 41966; SR–NSX–2013–14.

the list of Select Securities and add AAPL and GOOG.[13]

In its previous filings with respect to the enhanced rebates for Double Play Orders directed to and executed on CBSX, the Exchange noted that CBSX had determined the list of Select Securities and, because the Exchange intended to pass through the rebates to ETP Holders that directed Double Play Orders in the Select Securities to CBSX, it made conforming changes to the NSX Fee Schedule. CBSX has determined that, at present, it will not pay the enhanced rebate of $0.0045 per executed share for any of the symbols that comprise the list of Select Securities. The enhanced per share rebate for executed Double Play Orders in the Select Securities was an attempt to increase liquidity provision in these symbols, but such increased liquidity was not attained. The Exchange is therefore making conforming changes to the Fee Schedule to remove all of the symbols that currently comprise the list of Select Securities and will pay the rebate of $0.0015 per executed share applicable to all other routed orders in securities priced at $1.00 and above under Section III.A. of the Fee Schedule. If in the future the Exchange seeks to identify securities for the Select Securities list and apply a different fee and rebate program, it would do so upon a filing with the Commission pursuant to section 19(b) of the Act.

Amended Fees Applicable to Order Delivery Mode

The Exchange is further proposing to amend the Fee Schedule with respect to Order Delivery Mode by, first, eliminating securities priced below $1.00 from the monthly volume threshold of 1.5 million delivered Order Delivery Notifications that must be met before an Order Delivery User is no longer subject to the $0.35 fee per Order Delivery Notification fee. As a result, all Order Delivery Notifications in securities priced below $1.00 will not be subject to the Order Delivery Notification fee. Second, the Exchange is proposing to eliminate the quotation update fee in securities priced below $1.00, applicable to both new and existing Order Delivery Users. The Exchange states that it is proposing these changes to better align the fees and rebates applicable to Order Delivery Mode; to provide a more cost-effective structure; and to encourage greater activity in securities priced below $1.00 through the Order Delivery Mode.

Currently, under Section II. Pricing Option A of the Fee Schedule, the Exchange does not pay a transaction rebate or a market data rebate for securities priced under $1.00, but assesses a fee of $0.35 for each Order Delivery Notification, up to 1.5 million Order Delivery Notifications per month, that the System delivers to Order Delivery Users for potential execution against a posted displayed or undisplayed order. The Exchange states that, by proposing to eliminate from this volume threshold securities priced below $1.00 the and charge no fee per Order Delivery Notification for such securities, it is seeking to balance its Fee Schedule to better align the fees and rebates applicable to Order Delivery Notifications in sub-dollar securities. The Exchange states that it is proposing the change to enhance the incentives for an Order Delivery User to post bids and offers in securities priced below $1.00 on the NSX Book[14] since the Order Delivery User will not be charged the Order Delivery Notification fee when notified by the Exchange that its posted orders has been matched by the System for execution against a customer order. The Exchange makes it clear in the Fee Schedule that Order Delivery Notifications delivered to the Order Delivery User in securities priced below $1.00 shall not count toward the 1.5 million Order Delivery Notification fee cap applicable to securities priced at $1.00 and above.

The Exchange is also proposing to amend Section IV. of the Fee Schedule to eliminate the quotation update fee in securities priced below $1.00, applicable to both new and existing Order Delivery Users.[15] This proposed change is also directed at incentivizing Order Delivery Users to increase their use of Order Delivery Mode for quoting in securities priced below $1.00 by eliminating the fees that they would otherwise pay for quotation updates. The Exchange believes that by providing these incentives to Order Delivery Users, it will encourage more liquidity in securities priced below $1.00 on the Exchange, provide new opportunities for ETP Holders to interact with Order Delivery Users' quoted interest in securities priced below $1.00, and provide for a simpler and more cost-efficient fee and rebate structure.

Finally, the Exchange is also proposing to change the Fee Schedule to substitute references to an ''ETP Holder'' with the term ''Order Delivery User'' and describing such User as an ETP Holder approved for Order Delivery Mode. This non-material change will operate to provide clarity in the Fee Schedule and tracks language currently used in the Exchange's rules.

2. Statutory Basis

The Exchange believes that the proposed changes to the Fee Schedule are consistent with the provisions of Section 6(b) of the Act in general,[16] and Sections 6(b)(4)[17] and 6(b)(5)[18] of the Act in particular. With respect to the requirements of Section 6(b)(4) of the Act, the Exchange submits that all of the proposed changes, both for Auto Ex Mode and Order Delivery Mode, provide for the equitable allocation of reasonable dues, fees and other charges among ETP Holders, issuers and persons using the Exchange's facilities.

Specifically, the Exchange believes that the proposed fee and rebate changes for executions in Auto Ex Mode under the proposed revisions Section I. of the Fee Schedule are consistent with the provisions of Section 6(b)(4) of the Act in that they constitute an equitable allocation of reasonable dues and fees among ETP Holders and their customers and market participants seeking pools of liquidity. All ETP Holders are eligible to select the proposed pricing model and may do so at their discretion. The Exchange believes that its proposal to change the ADV threshold in the Fixed Fee Schedule from 50,000 shares to 25,000 shares of added liquidity during a calendar month and to adjust the fees for removing liquidity and the rebates for adding liquidity in the Fixed and Variable Fee Schedules, with the amounts varying depending on the volume tiers into which the ETP Holder's executed volume falls, are consistent with Section 6(b)(5) of the Act in that it is intended to remove impediments to and perfect the mechanism of a free and open market and a national market system and, in general, protect investors and the public interest, by encouraging greater liquidity on the Exchange, potentially improving execution quality and price-discovery, and promoting an efficient and cost-effective means of trading.

[13] *See* Exchange Act Release No. 34–70525; 78 FR 60954; SR–NSX–2013–18.

[14] Exchange Rule 1.5 defines the term ''NSX Book'' as ''. . . the System's electronic file of orders.''

[15] For securities priced at $1.00 and above, the Exchange will continue to apply a quotation update fee of $0.000467 to an Order Delivery User's first 150 million quotation updates each calendar month, with no fee applied after this threshold is met. New Order Delivery Users will be charged a reduced fee of $0.000667 per quotation update in securities priced at $1.00 and above for the first three months of operation as an Order Delivery User.

[16] 15 U.S.C. 78f(b).

[17] 15 U.S.C. 78f(b)(4).

[18] 15 U.S.C. 78f(b)(5).

Similarly, the Exchange submits that its proposal to provide a rebate of $0.0034 per executed share to ETP Holders that execute ADV of at least 25,000 shares adding liquidity in Tape B securities, with such rebate to apply across all volume tiers, is intended to attract more volume in those securities to the Exchange, provide additional execution opportunities for ETP Holders seeking to remove that liquidity, and to promote narrower spreads and better execution quality. The Exchange believes that these goals are consistent with Section 6(b)(5) of the Act in that they promote the maintenance of fair and orderly markets, operate to perfect the mechanism of a free and open market and national market system, and are consistent with the protection of investors and the public interest.

The Exchange states that its proposed amendment to Section I. of the Fee Schedule to eliminate volume Tier 6 is consistent with the Section 6(b) of the Act and Sections 6(b)(4) and 6(b)(5) in that it better aligns the Fee Schedule with the trading volume of the Exchange, thereby enhancing transparency and clarity, while providing incentives through the proposed amendments to Section I. to promote additional liquidity and increase trading volumes. This change is consistent with both the provisions of Section 6(b)(4) requiring an equitable allocation of reasonable dues and fees among ETP Holders, issuers and other persons using the Exchange's facilities, and the provisions of section 6(b)(5) requiring that the rules of the Exchange promote just and equitable principles of trade.

The Exchange submits that its proposal amend Section III.A. of the Fee Schedule to remove the five symbols that currently comprise the list of Select Securities, and not presently offer an enhanced rebate for any Double Play Orders in Select Securities directed to and executed on CBSX, is consistent with Section 6(b)(4) of the Act in that it is an equitable allocation of reasonable dues and fees among ETP Holders, issuers, and persons using the facilities of the Exchange. The Exchange's proposed amendment will remove the enhanced rebates applicable to executed Double Play Orders in the Select Securities directed to CBSX. Any such executions in the symbols that formerly comprised the list of Select Securities will now be subject to the fee and rebate schedule applicable to all securities priced at $1.00 and above, which will be assessed equally to all ETP Holders and persons using the facilities of the Exchange. The Exchange believes that it is not inconsistent with Section 6 of the Act to eliminate the enhanced rebates for executions in Double Play Orders in the five symbols that comprised the Select Securities list when the desired liquidity that the enhanced rebate was intended to incentivize in those symbols is not attained.

The Exchange next submits that, with respect to the proposed elimination of the fees for Order Delivery Notifications in securities priced below $1.00, its proposal is consistent with Section 6 of the Act in that it applies equally to all Order Delivery Users with posted interest in such securities on the NSX Book. The Exchange further submits that its proposed elimination of the Order Delivery Notification fee in securities priced below $1.00 is consistent with Section 6(b)(4) in that it is reasonable to differentiate securities priced under $1.00 in determining a reasonable fee and rebate structure. In this instance, the Exchange is proposing an amendment that would eliminate the fee that the Exchange currently charges Order Delivery Users for each Order Delivery Notification in a sub-dollar security, up to 1.5 million notifications per month. Under the current Fee Schedule, this is the same fee that the Exchange charges Order Delivery Users for each order Delivery Notification in a security priced at $1.00 and above, up to 1.5 million notifications per month. Currently, Order Delivery Users receive transaction and market data rebates for securities priced at $1.00 above while no such rebates are available for securities priced below $1.00.

The Exchange believes that by eliminating the Order Delivery Notification fee for securities priced below $1.00 it will incentivize Order Delivery Users to post more interest in such securities on the NSX Book, thereby potentially increasing liquidity in such securities and providing more execution opportunities on the Exchange. It will also provide a potentially more advantageous fee and rebate structure for Order Delivery Users, who under the current Fee Schedule are subject to the same fees and volume thresholds for securities priced at or above $1.00 and those priced under $1.00, but without the ability to receive the rebates offered by the Exchange for securities priced at $1.00 and above. For securities priced at $1.00 and above, the 1.5 million Order Delivery Notification fee cap will remain in place.

The Exchange submits that the proposed fee structure for Order Delivery Notifications and quotation updates by Order Delivery Users in securities priced below $1.00 is consistent with Section 6(b)(5) of the Act in that it does not permit unfair discrimination between ETP Holders, issuers and customers. The Exchange is proposing the amendments with the goals of providing a balanced fee and rebate structure for order Delivery Users and incentivizing Order Delivery Users to post more liquidity in securities priced under $1.00 on the Exchange. There are other markets and execution venues with different pricing mechanisms offered to attract liquidity to those venues. The Exchange submits that in this highly competitive environment, its proposal to eliminate the Order Delivery Notification and quotation update fees in securities priced under $1.00, applicable to Order Delivery Users, provides alternatives to ETP Holders and their customers, while striving to increase liquidity in securities priced under $1.00 on the Exchange.

B. Self-Regulatory Organization's Statement on Burden on Competition

The Exchange does not believe that the proposed rule change will impose any burden on competition that is not necessary or appropriate in furtherance of the purposes of the Act. The Exchange submits that its proposals to enhance the rebates available to ETP Holders using Auto Ex Mode; and eliminate fees paid by Order Delivery Users for Order Delivery Notifications and quotation updates in securities priced below $1.00, are reasonable approaches to incentivize additional order flow in a highly competitive environment and therefore does not present a burden on competition.

The proposed rule change to remove the five securities from the list of Select Securities will not impose any burden on competition that is not necessary or appropriate in furtherance of the purposes of the Act because the proposed changes will subject the five symbols on the list to the same fee and rebate structure that is now applied to all other securities in which orders are routed.

Moreover, the Exchange is seeking to provide a fee and rebate structure that appropriately addresses the balance between fees and rebates and provides an economical and cost-effective means for executing transactions in the Exchange's market. To this extent, the Exchange submits that the proposed amendments to the Fee Schedule operate to enhance competition among competing trading venues and provide more choices for ETP Holders and their customers.

C. Self-Regulatory Organization's Statement on Comments on the Proposed Rule Change Received From Members, Participants, or Others

The Exchange has neither solicited nor received written comments on the proposed rule change.

III. Date of Effectiveness of the Proposed Rule Change and Timing for Commission Action

The proposed rule change has taken effect upon filing pursuant to Section 19(b)(3)(A)(ii) of the Exchange Act [19] and subparagraph (f)(2) of Rule 19b–4.[20] At any time within 60 days of the filing of such proposed rule change, the Commission summarily may temporarily suspend such rule change if it appears to the Commission that such action is necessary or appropriate in the public interest, for the protection of investors, or otherwise in furtherance of the purposes of the Act.

IV. Solicitation of Comments

Interested persons are invited to submit written data, views, and arguments concerning the foregoing, including whether the proposed rule change is consistent with the Act. Comments may be submitted by any of the following methods:

Electronic Comments

- Use the Commission's Internet comment form (*http://www.sec.gov/rules/sro.shtml*); or
- Send an email to *rule-comments@sec.gov.* Please include File Number SR–NSX–2013–21 on the subject line.

Paper Comments

- Send paper comments in triplicate to Elizabeth M. Murphy, Secretary, Securities and Exchange Commission, 100 F Street NE., Washington, DC 20549–1090.

All submissions should refer to File Number SR–NSX–2013–21. This file number should be included on the subject line if email is used. To help the Commission process and review your comments more efficiently, please use only one method. The Commission will post all comments on the Commission's Internet Web site (*http://www.sec.gov/rules/sro.shtml*). Copies of the submission, all subsequent amendments, all written statements with respect to the proposed rule change that are filed with the Commission, and all written communications relating to the proposed rule change between the Commission and any person, other than those that may be withheld from the public in accordance with the provisions of 5 U.S.C. 552, will be available for Web site viewing and printing in the Commission's Public Reference Room, 100 F Street NE., Washington DC 20549, on official business days between the hours of 10:00 a.m. and 3:00 p.m. Copies of such filing also will be available for inspection and copying at the principal office of the Exchange. All comments received will be posted without change; the Commission does not edit personal identifying information from submissions. You should submit only information that you wish to make available publicly. All submissions should refer to File Number SR–NSX–2013–21, and should be submitted on or before December 12, 2013.

For the Commission, by the Division of Trading and Markets, pursuant to delegated authority.[21]

Kevin M. O'Neill,

Deputy Secretary.

[FR Doc. 2013–27905 Filed 11–20–13; 8:45 am]

BILLING CODE 8011–01–P

[19] 15 U.S.C. 78s(b)(3)(A)(ii).

[20] 17 CFR 240.19b–4.

[21] 17 CFR 200.30–3(a)(12).

SECURITIES AND EXCHANGE COMMISSION

[Release No. 34–70886; File No. SR–NYSEMKT–2013–92]

Self-Regulatory Organizations; NYSE MKT LLC; Notice of Filing and Immediate Effectiveness of Proposed Rule Change Expanding Co-location Services to Provide for a Lower-Latency 10 Gigabit Liquidity Center Network Connection in the Exchange's Data Center

November 15, 2013.

Pursuant to Section 19(b)(1) [1] of the Securities Exchange Act of 1934 (the ''Act'') [2] and Rule 19b–4 thereunder,[3] notice is hereby given that, on November 7, 2013, NYSE MKT LLC (the ''Exchange'' or ''NYSE MKT'') filed with the Securities and Exchange Commission (the ''Commission'') the proposed rule change as described in Items I and II below, which Items have been prepared by the self-regulatory organization. The Commission is publishing this notice to solicit comments on the proposed rule change from interested persons.

I. Self-Regulatory Organization's Statement of the Terms of Substance of the Proposed Rule Change

The Exchange proposes to expand its co-location services to provide for a lower-latency 10 gigabit (''Gb'') Liquidity Center Network (''LCN'') connection in the Exchange's data center. The text of the proposed rule change is available on the Exchange's Web site at *www.nyse.com,* at the principal office of the Exchange, and at the Commission's Public Reference Room.

II. Self-Regulatory Organization's Statement of the Purpose of, and Statutory Basis for, the Proposed Rule Change

In its filing with the Commission, the self-regulatory organization included statements concerning the purpose of, and basis for, the proposed rule change and discussed any comments it received on the proposed rule change. The text of those statements may be examined at the places specified in Item IV below. The Exchange has prepared summaries, set forth in sections A, B, and C below, of the most significant parts of such statements.

A. Self-Regulatory Organization's Statement of the Purpose of, and the Statutory Basis for, the Proposed Rule Change

1. Purpose

The Exchange proposes to expand its co-location services to provide for a new lower-latency 10 Gb LCN connection, referred to as the ''LCN 10 Gb LX,'' in the Exchange's data center.[4] The Exchange will propose applicable fees for the proposed LCN 10 Gb LX connection via a separate proposed rule change.

The LCN is a local area network that is available in the data center and that provides Users with access to the Exchange's trading and execution systems and to the Exchange's proprietary market data products.[5] LCN

[1] 15 U.S.C.78s(b)(1).

[2] 15 U.S.C. 78a.

[3] 17 CFR 240.19b–4.

[4] The Securities and Exchange Commission (''Commission'') initially approved the Exchange's co-location services in Securities Exchange Act Release No. 62961 (September 21, 2010), 75 FR 59299 (September 27, 2010) (SR–NYSEAmex–2010–80) (the ''Original Co-location Approval''). The Exchange operates a data center in Mahwah, New Jersey (the ''data center'') from which it provides co-location services to Users. The Exchange's co-location services allow Users to rent space in the data center so they may locate their electronic servers in close physical proximity to the Exchange's trading and execution system. *See id.* at 59299.

[5] For purposes of the Exchange's co-location services, the term ''User'' includes (i) member organizations, as that term is defined in the definitions section of the General and Floor Rules

access is currently available in one, 10 and 40 Gb bandwidth capacities.[6] The Exchange proposes to make a second 10 Gb LCN connection available in the Exchange's data center, the LCN 10 Gb LX, which would have a lower latency than the existing 10 Gb LCN connection. The LCN 10 Gb LX is expected to have latency levels similar to those of the existing 40 Gb LCN connection.

The Exchange is proposing this change in order to make an additional service available to its co-location Users and thereby satisfy demand for more efficient, lower latency connections. By utilizing ultra low-latency switches, the LCN 10 Gb LX connection would provide faster processing of messages sent to it in comparison to the existing, standard 10 Gb LCN connection. A switch is a type of network hardware that acts as the ''gatekeeper'' for a User's messaging (e.g., orders and quotes) sent to the Exchange's trading and execution system from the data center. As a consequence, Users needing only 10 Gb of bandwidth, but seeking faster processing of those messages, would have the option of utilizing the faster and more efficient LCN 10 Gb LX connection.[7] Both the proposed LCN 10 Gb LX connection and the 40 Gb LCN connection would represent the lowest latency currently available to Users.

As is the case with all Exchange co-location arrangements, (i) neither a User nor any of the User's customers would be permitted to submit orders directly to the Exchange unless such User or customer is a member organization, an ATP Holder, a Sponsored Participant or an agent thereof (e.g., a service bureau providing order entry services); (ii) use of the co-location services proposed herein would be completely voluntary and available to all Users on a non-discriminatory basis;[8] and (iii) a User would only incur one charge for the particular co-location service described herein, regardless of whether the User connects only to the Exchange or to the Exchange and one or both of its affiliates.[9]

The proposed change is not otherwise intended to address any other issues relating to co-location services and/or related fees, and the Exchange is not aware of any problems that Users would have in complying with the proposed change.

2. Statutory Basis

The Exchange believes that the proposed rule change is consistent with Section 6(b) of the Act,[10] in general, and furthers the objectives of Sections 6(b)(5) of the Act,[11] in particular, because it is designed to prevent fraudulent and manipulative acts and practices, to promote just and equitable principles of trade, to foster cooperation and coordination with persons engaged in regulating, clearing, settling, processing information with respect to, and facilitating transactions in securities, to remove impediments to, and perfect the mechanisms of, a free and open market and a national market system and, in general, to protect investors and the public interest and because it is not designed to permit unfair discrimination between customers, issuers, brokers, or dealers.

The proposed LCN 10 Gb LX connection would assist Users in making their network connectivity more efficient by reducing the time that messaging (e.g., orders and quotes) takes to reach the Exchange's trading and execution system once sent from their co-located servers and also the time that market data takes to reach their co-located servers. Speed and efficiency are important drivers of the U.S. securities markets. The Exchange is proposing to offer a co-location connectivity solution that would promote these drivers by providing state of the art technology that would be available to all Users. The Exchange believes that the LCN 10 Gb LX connection would remove impediments to and perfect the mechanism of a free and open market and a national market system by providing for improved speed and efficiency of message processing (e.g., orders and quotes) from Users' co-located servers.

The Exchange also believes that the reduction in latencies attributed to the LCN 10 Gb LX connection would serve to protect investors and the public interest by providing Users with the most efficient means of processing their messages sent to the Exchange's trading and execution system from the data center.

The Exchange also believes that the proposed LCN 10 Gb LX connection is not designed to permit unfair discrimination between customers, issuers, brokers, or dealers because it would make a service available to Users that require the low-latency connection, but Users that do not require the lower latency could continue to request an existing 10 Gb LCN connection. The Exchange anticipates that the latency for the proposed LCN 10 Gb LX connection would be comparable to that of the existing 40 Gb LCN connection. Both the proposed LCN 10 Gb LX connection and the 40 Gb LCN connection would represent the lowest latency currently available to Users. The 40 Gb LCN provides the greatest bandwidth available on the Exchange, which is important for Users that have high order flow and ingest large amounts of market data and demand the greatest bandwidth possible to handle such message flow. Some Users, however, have systems that are not compatible with a 40 Gb LCN connection, or do not have bandwidth demands that would require a 40 Gb LCN connection, but still put a premium on reducing latency. The LCN 10 Gb LX is designed to meet this demand. Ultimately, a User will be able to choose between the proposed

of the NYSE MKT Equities Rules, and ATP Holders, as that term is defined in NYSE Amex Options Rule 900.2NY(5); (ii) Sponsored Participants, as that term is defined in Rule 123B.30(a)(ii)(B)—Equities and NYSE Amex Options Rule 900.2NY(77); and (iii) non-member organization and non-ATP Holder broker-dealers and vendors that request to receive co-location services directly from the Exchange. *See, e.g.,* Securities Exchange Act Release Nos. 65974 (December 15, 2011), 76 FR 79249 (December 21, 2011) (SR–NYSEAmex–2011–81) and 65975 (December 15, 2011), 76 FR 79233 (December 21, 2011) (SR–NYSEAmex–2011–82). As specified in the NYSE MKT Equities Price List and the NYSE Amex Options Fee Schedule, a User that incurs co-location fees for a particular co-location service pursuant thereto would not be subject to co-location fees for the same co-location service charged by the Exchange's affiliates New York Stock Exchange LLC and NYSE Arca, Inc. *See* Securities Exchange Act Release No. 70176 (August 13, 2013), 78 FR 50471 (August 19, 2013) (SR–NYSEMKT–2013–67).

[6] *See id.*

[7] The existing one Gb and 10 Gb LCN connections use the same type of switch and the existing 40 Gb LCN connection uses a second type of switch, but the switches are of uniform type within each offering. The proposed new LCN 10 Gb LX would use the same type of switch as the existing 40 Gb LCN. As a consequence, all co-located Users of a particular connectivity option receive the same latency in terms of the capabilities of their switches. At this time, the Exchange is not proposing to make low-latency switches available for 10 Gb CSP connections because, at least initially, User demand is not anticipated to exist. For a 10 Gb LX ''Bundle,'' SFTI and optic connections would be at standard 10 Gb latencies and only the LCN connections would be lower latency. The Exchange will include language in the NYSE MKT Equities Price List and the NYSE Amex Options Fee Schedule in the related fee change to reflect this fact.

[8] As is currently the case, Users that receive co-location services from the Exchange will not receive any means of access to the Exchange's trading and execution systems that is separate from, or superior to, that of other Users. In this regard, all orders sent to the Exchange enter the Exchange's trading and execution systems through the same order gateway, regardless of whether the sender is co-located in the data center or not. In addition, co-located Users do not receive any market data or data service product that is not available to all Users, although Users that receive co-location services normally would expect reduced latencies in sending orders to, and receiving market data from, the Exchange.

[9] *See* SR–NYSEMKT–2013–67, *supra* note 5 at 50471. The Exchange's affiliates have also submitted the same proposed rule change to provide for LCN 10 Gb LX connections. *See* SR–NYSE–2013–73 and SR–NYSEArca-2013–123.

[10] 15 U.S.C. 78f(b).

[11] 15 U.S.C. 78f(b)(5).

new LCN 10 Gb LX connection or the existing one, 10 and 40 Gb LCN connections to suit its needs. The Exchange believes that this would remove impediments to, and perfect the mechanisms of, a free and open market and a national market system and, in general, protect investors and the public interest because it would provide Users with additional choices with respect to the optimal bandwidth and latency for their connections.

Finally, the Exchange believes that it is subject to significant competitive forces, as described below in the Exchange's statement regarding the burden on competition.

For these reasons, the Exchange believes that the proposal is consistent with the Act.

B. Self-Regulatory Organization's Statement on Burden on Competition

In accordance with Section 6(b)(8) of the Act,[12] the Exchange believes that the proposed rule change will not impose any burden on competition that is not necessary or appropriate in furtherance of the purposes of the Act because any market participants that are otherwise capable of satisfying any applicable co-location fees, requirements, terms and conditions established from time to time by the Exchange could have access to the co-location services provided in the data center. This is also true because, in addition to the services being completely voluntary, they are available to all Users on an equal basis (i.e., the same range of products and services are available to all Users).

The Exchange also believes that the proposed LCN 10 Gb LX connection will not impose any burden on competition that is not necessary or appropriate in furtherance of the purposes of the Act because it will satisfy User demand for more efficient, lower-latency connections, but Users that do not require the lower latency could continue to request an existing LCN connection. Similarly, it will provide an option for a User whose system is not compatible with a 40 Gb LCN connection, or does not have bandwidth demands that would require a 40 Gb LCN connection, but that puts a premium on reducing latency. Additionally, the Exchange believes that the proposed change will enhance competition between competing marketplaces by enabling the Exchange to provide a low-latency connectivity option to Users that is similar to a service available on other markets. For example, The NASDAQ Stock Market LLC (''NASDAQ'') also makes a low-latency 10 Gb fiber connection option available to users of its co-location facilities.[13]

Finally, the Exchange notes that it operates in a highly competitive market in which market participants can readily favor competing venues if, for example, they deem fee levels at a particular venue to be excessive or if they determine that another venue's products and services are more competitive than on the Exchange. In such an environment, the Exchange must continually review, and consider adjusting, the services it offers as well as any corresponding fees and credits to remain competitive with other exchanges. For the reasons described above, the Exchange believes that the proposed rule change reflects this competitive environment.

C. Self-Regulatory Organization's Statement on Comments on the Proposed Rule Change Received From Members, Participants, or Others

No written comments were solicited or received with respect to the proposed rule change.

III. Date of Effectiveness of the Proposed Rule Change and Timing for Commission Action

The Exchange has filed the proposed rule change pursuant to Section 19(b)(3)(A)(iii) of the Act[14] and Rule 19b–4(f)(6) thereunder.[15] Because the foregoing proposed rule change does not: (1) Significantly affect the protection of investors or the public interest; (2) impose any significant burden on competition; and (3) by its terms does not become operative for 30 days after the date of this filing, or such shorter time as the Commission may designate if consistent with the protection of investors and the public interest, the proposed rule change has become effective pursuant to Section 19(b)(3)(A) of the Act[16] and Rule 19b–4(f)(6) thereunder.[17]

A proposed rule change filed under Rule 19b–4(f)(6)[18] normally does not become operative prior to 30 days after the date of the filing. However, pursuant to Rule 19b4(f)(6)(iii),[19] the Commission may designate a shorter time if such action is consistent with the protection of investors and the public interest. The Exchange has asked the Commission to waive the 30-day operative delay so that the proposal may become operative immediately upon filing. The Exchange requested waiver of the 30-day operative delay in order to immediately implement the proposed rule change so that Users may experience the benefits of such proposed change as soon as possible. The Exchange represented that a waiver of the operative delay would be in the public interest and would contribute to the protection of investors because it would permit additional Users to have access to lower-latency LCN connections, including those Users whose systems are not compatible with the existing 40 Gb LCN connection or who do not have bandwidth demands that would require a 40 Gb LCN connection. The Exchange further stated that the benefit of such lower latency would indirectly benefit customers of such Users and would serve to protect investors and the public interest, in that the LCN 10 Gb LX connection would provide Users with the most efficient means of processing customer orders that are sent to the Exchange's trading and execution system from the data center. The Exchange stated its belief that the proposed LCN 10 Gb LX connection does not raise any novel or unique issues or concerns. The Exchange further stated that it does not anticipate any negative consequence, whether for Users, the investing public or otherwise, as a result of granting a waiver of the operative delay. For the above reasons, the Commission believes waiver of the operative delay is appropriate and hereby grants the Exchange's request and designates the proposal operative upon filing.[20]

At any time within 60 days of the filing of such proposed rule change, the Commission summarily may temporarily suspend such rule change if it appears to the Commission that such action is necessary or appropriate in the public interest, for the protection of investors, or otherwise in furtherance of the purposes of the Act. If the Commission takes such action, the Commission shall institute proceedings under Section 19(b)(2)(B)[21] of the Act to

[12] 15 U.S.C. 78f(b)(8).

[13] *See* NASDAQ Rule 7034. NASDAQ refers to this connectivity option as the ''10 Gb Ultra'' connection. *See also* Securities Exchange Act Release No. 70129 (August 7, 2013), 78 FR 49308 (August 13, 2013) (SR–NASDAQ–2013–099).

[14] 15 U.S.C. 78s(b)(3)(A)(iii).

[15] 17 CFR 240.19b–4(f)(6).

[16] 15 U.S.C. 78s(b)(3)(A).

[17] 17 CFR 240.19b–4(f)(6). In addition, Rule 19b–4(f)(6)(iii) requires a self-regulatory organization to provide the Commission with written notice of its intent to file the proposed rule change, along with a brief description and text of the proposed rule change, at least five business days prior to the date of filing of the proposed rule change, or such shorter time as designated by the Commission. The Exchange has met this requirement.

[18] 17 CFR 240.19b–4(f)(6).

[19] 17 CFR 240.19b–4(f)(6)(iii).

[20] For purposes only of waiving the 30-day operative delay, the Commission has also considered the proposed rule's impact on efficiency, competition, and capital formation. *See* 15 U.S.C. 78c(f).

[21] 15 U.S.C. 78s(b)(2)(B).

determine whether the proposed rule change should be approved or disapproved.

IV. Solicitation of Comments

Interested persons are invited to submit written data, views, and arguments concerning the foregoing, including whether the proposed rule change is consistent with the Act. Comments may be submitted by any of the following methods:

Electronic Comments

- Use the Commission's Internet comment form (*http://www.sec.gov/rules/sro.shtml*); or
- Send an email to *rule-comments@sec.gov.* Please include File Number SR–NYSEMKT–2013–92 *on the subject line.*

Paper Comments

- Send paper comments in triplicate to Elizabeth M. Murphy, Secretary, Securities and Exchange Commission, 100 F Street NE., Washington, DC 20549–1090.

All submissions should refer to File Number SR–NYSEMKT–2013–92. This file number should be included on the subject line if email is used. To help the Commission process and review your comments more efficiently, please use only one method. The Commission will post all comments on the Commission's Internet Web site (*http://www.sec.gov/rules/sro.shtml*). Copies of the submission, all subsequent amendments, all written statements with respect to the proposed rule change that are filed with the Commission, and all written communications relating to the proposed rule change between the Commission and any person, other than those that may be withheld from the public in accordance with the provisions of 5 U.S.C. 552, will be available for Web site viewing and printing in the Commission's Public Reference Room, 100 F Street NE., Washington, DC 20549, on official business days between the hours of 10:00 a.m. and 3:00 p.m. Copies of the filing also will be available for inspection and copying at the principal office of the Exchange. All comments received will be posted without change; the Commission does not edit personal identifying information from submissions. You should submit only information that you wish to make available publicly. All submissions should refer to File Number SR–NYSEMKT–2013–92 and should be submitted on or before December 12, 2013.

For the Commission, by the Division of Trading and Markets, pursuant to delegated authority.[22]

Kevin M. O'Neill,

Deputy Secretary.

[FR Doc. 2013–27901 Filed 11–20–13; 8:45 am]

BILLING CODE 8011–01–P

[22] 17 CFR 200.30–3(a)(12).

SECURITIES AND EXCHANGE COMMISSION

[Release No. 34–70888; File No. SR–NYSE–2013–73]

Self-Regulatory Organizations; New York Stock Exchange LLC; Notice of Filing and Immediate Effectiveness of Proposed Rule Change Expanding Co-location Services To Provide for a Lower-Latency 10 Gigabit Liquidity Center Network Connection in the Exchange's Data Center

November 15, 2013.

Pursuant to Section 19(b)(1)[1] of the Securities Exchange Act of 1934 (the ''Act'')[2] and Rule 19b–4 thereunder,[3] notice is hereby given that, on November 7, 2013, New York Stock Exchange LLC (''NYSE'' or the ''Exchange'') filed with the Securities and Exchange Commission (the ''Commission'') the proposed rule change as described in Items I and II below, which Items have been prepared by the self-regulatory organization. The Commission is publishing this notice to solicit comments on the proposed rule change from interested persons.

I. Self-Regulatory Organization's Statement of the Terms of Substance of the Proposed Rule Change

The Exchange proposes to expand its co-location services to provide for a lower-latency 10 gigabit (''Gb'') Liquidity Center Network (''LCN'') connection in the Exchange's data center. The text of the proposed rule change is available on the Exchange's Web site at *www.nyse.com,* at the principal office of the Exchange, and at the Commission's Public Reference Room.

II. Self-Regulatory Organization's Statement of the Purpose of, and Statutory Basis for, the Proposed Rule Change

In its filing with the Commission, the self-regulatory organization included statements concerning the purpose of, and basis for, the proposed rule change and discussed any comments it received on the proposed rule change. The text of those statements may be examined at the places specified in Item IV below. The Exchange has prepared summaries, set forth in sections A, B, and C below, of the most significant parts of such statements.

A. Self-Regulatory Organization's Statement of the Purpose of, and the Statutory Basis for, the Proposed Rule Change

1. Purpose

The Exchange proposes to expand its co-location services to provide for a new lower-latency 10 Gb LCN connection, referred to as the ''LCN 10 Gb LX,'' in the Exchange's data center.[4] The Exchange will propose applicable fees for the proposed LCN 10 Gb LX connection via a separate proposed rule change.

The LCN is a local area network that is available in the data center and that provides Users with access to the Exchange's trading and execution systems and to the Exchange's proprietary market data products.[5] LCN access is currently available in one, 10 and 40 Gb bandwidth capacities.[6] The Exchange proposes to make a second 10 Gb LCN connection available in the Exchange's data center, the LCN 10 Gb LX, which would have a lower latency than the existing 10 Gb LCN connection. The LCN 10 Gb LX is expected to have latency levels similar to those of the existing 40 Gb LCN connection.

The Exchange is proposing this change in order to make an additional

[1] 15 U.S.C. 78s(b)(1).

[2] 15 U.S.C. 78a.

[3] 17 CFR 240.19b–4.

[4] The Securities and Exchange Commission (''Commission'') initially approved the Exchange's co-location services in Securities Exchange Act Release No. 62960 (September 21, 2010), 75 FR 59310 (September 27, 2010) (SR–NYSE–2010–56) (the ''Original Co-location Approval''). The Exchange operates a data center in Mahwah, New Jersey (the ''data center'') from which it provides co-location services to Users. The Exchange's co-location services allow Users to rent space in the data center so they may locate their electronic servers in close physical proximity to the Exchange's trading and execution system. *See id.* at 59310.

[5] For purposes of the Exchange's co-location services, the term ''User'' includes (i) member organizations, as that term is defined in NYSE Rule 2(b); (ii) Sponsored Participants, as that term is defined in NYSE Rule 123B.30(a)(ii)(B); and (iii) non-member organization broker-dealers and vendors that request to receive co-location services directly from the Exchange. *See, e.g.,* Securities Exchange Act Release No. 65973 (December 15, 2011), 76 FR 79232 (December 21, 2011) (SR–NYSE–2011–53). As specified in the Exchange's Price List, a User that incurs co-location fees for a particular co-location service pursuant thereto would not be subject to co-location fees for the same co-location service charged by the Exchange's affiliates NYSE MKT LLC and NYSE Arca, Inc. *See* Securities Exchange Act Release No. 70206 (August 15, 2013), 78 FR 51765 (August 21, 2013) (SR–NYSE–2013–59).

[6] *See id.*

service available to its co-location Users and thereby satisfy demand for more efficient, lower latency connections. By utilizing ultra low-latency switches, the LCN 10 Gb LX connection would provide faster processing of messages sent to it in comparison to the existing, standard 10 Gb LCN connection. A switch is a type of network hardware that acts as the ''gatekeeper'' for a User's messaging (e.g., orders and quotes) sent to the Exchange's trading and execution system from the data center. As a consequence, Users needing only 10 Gb of bandwidth, but seeking faster processing of those messages, would have the option of utilizing the faster and more efficient LCN 10 Gb LX connection.[7] Both the proposed LCN 10 Gb LX connection and the 40 Gb LCN connection would represent the lowest latency currently available to Users.

As is the case with all Exchange co-location arrangements, (i) neither a User nor any of the User's customers would be permitted to submit orders directly to the Exchange unless such User or customer is a member organization, a Sponsored Participant or an agent thereof (e.g., a service bureau providing order entry services); (ii) use of the co-location services proposed herein would be completely voluntary and available to all Users on a non-discriminatory basis;[8] and (iii) a User would only incur one charge for the particular co-location service described herein, regardless of whether the User connects only to the Exchange or to the Exchange and one or both of its affiliates.[9]

The proposed change is not otherwise intended to address any other issues relating to co-location services and/or related fees, and the Exchange is not aware of any problems that Users would have in complying with the proposed change.

2. Statutory Basis

The Exchange believes that the proposed rule change is consistent with Section 6(b) of the Act,[10] in general, and furthers the objectives of Sections 6(b)(5) of the Act,[11] in particular, because it is designed to prevent fraudulent and manipulative acts and practices, to promote just and equitable principles of trade, to foster cooperation and coordination with persons engaged in regulating, clearing, settling, processing information with respect to, and facilitating transactions in securities, to remove impediments to, and perfect the mechanisms of, a free and open market and a national market system and, in general, to protect investors and the public interest and because it is not designed to permit unfair discrimination between customers, issuers, brokers, or dealers.

The proposed LCN 10 Gb LX connection would assist Users in making their network connectivity more efficient by reducing the time that messaging (e.g., orders and quotes) takes to reach the Exchange's trading and execution system once sent from their co-located servers and also the time that market data takes to reach their co-located servers. Speed and efficiency are important drivers of the U.S. securities markets. The Exchange is proposing to offer a co-location connectivity solution that would promote these drivers by providing state of the art technology that would be available to all Users. The Exchange believes that the LCN 10 Gb LX connection would remove impediments to and perfect the mechanism of a free and open market and a national market system by providing for improved speed and efficiency of message processing (e.g., orders and quotes) from Users' co-located servers.

The Exchange also believes that the reduction in latencies attributed to the LCN 10 Gb LX connection would serve to protect investors and the public interest by providing Users with the most efficient means of processing their messages sent to the Exchange's trading and execution system from the data center.

The Exchange also believes that the proposed LCN 10 Gb LX connection is not designed to permit unfair discrimination between customers, issuers, brokers, or dealers because it would make a service available to Users that require the low-latency connection, but Users that do not require the lower latency could continue to request an existing 10 Gb LCN connection. The Exchange anticipates that the latency for the proposed LCN 10 Gb LX connection would be comparable to that of the existing 40 Gb LCN connection. Both the proposed LCN 10 Gb LX connection and the 40 Gb LCN connection would represent the lowest latency currently available to Users. The 40 Gb LCN provides the greatest bandwidth available on the Exchange, which is important for Users that have high order flow and ingest large amounts of market data and demand the greatest bandwidth possible to handle such message flow. Some Users, however, have systems that are not compatible with a 40 Gb LCN connection, or do not have bandwidth demands that would require a 40 Gb LCN connection, but still put a premium on reducing latency. The LCN 10 Gb LX is designed to meet this demand. Ultimately, a User will be able to choose between the proposed new LCN 10 Gb LX connection or the existing one, 10 and 40 Gb LCN connections to suit its needs. The Exchange believes that this would remove impediments to, and perfect the mechanisms of, a free and open market and a national market system and, in general, protect investors and the public interest because it would provide Users with additional choices with respect to the optimal bandwidth and latency for their connections.

Finally, the Exchange believes that it is subject to significant competitive forces, as described below in the Exchange's statement regarding the burden on competition.

For these reasons, the Exchange believes that the proposal is consistent with the Act.

B. Self-Regulatory Organization's Statement on Burden on Competition

In accordance with Section 6(b)(8) of the Act,[12] the Exchange believes that the proposed rule change will not impose any burden on competition that is not necessary or appropriate in furtherance of the purposes of the Act because any market participants that are otherwise capable of satisfying any applicable co-location fees, requirements, terms and

[7] The existing one Gb and 10 Gb LCN connections use the same type of switch and the existing 40 Gb LCN connection uses a second type of switch, but the switches are of uniform type within each offering. The proposed new LCN 10 Gb LX would use the same type of switch as the existing 40 Gb LCN. As a consequence, all co-located Users of a particular connectivity option receive the same latency in terms of the capabilities of their switches. At this time, the Exchange is not proposing to make low-latency switches available for 10 Gb CSP connections because, at least initially, User demand is not anticipated to exist. For a 10 Gb LX ''Bundle,'' SFTI and optic connections would be at standard 10 Gb latencies and only the LCN connections would be lower latency. The Exchange will include language in its Price List in the related fee change to reflect this fact.

[8] As is currently the case, Users that receive co-location services from the Exchange will not receive any means of access to the Exchange's trading and execution systems that is separate from, or superior to, that of other Users. In this regard, all orders sent to the Exchange enter the Exchange's trading and execution systems through the same order gateway, regardless of whether the sender is co-located in the data center or not. In addition, co-located Users do not receive any market data or data service product that is not available to all Users, although Users that receive co-location services normally would expect reduced latencies in sending orders to, and receiving market data from, the Exchange.

[9] *See* SR–NYSE–2013–59, *supra* note 5 at 51766. The Exchange's affiliates have also submitted the same proposed rule change to provide for LCN 10 Gb LX connections. *See* SR–NYSEMKT–2013–92 and SR–NYSEArca–2013–123.

[10] 15 U.S.C. 78f(b).

[11] 15 U.S.C. 78f(b)(5).

[12] 15 U.S.C. 78f(b)(8).

conditions established from time to time by the Exchange could have access to the co-location services provided in the data center. This is also true because, in addition to the services being completely voluntary, they are available to all Users on an equal basis (i.e., the same range of products and services are available to all Users).

The Exchange also believes that the proposed LCN 10 Gb LX connection will not impose any burden on competition that is not necessary or appropriate in furtherance of the purposes of the Act because it will satisfy User demand for more efficient, lower-latency connections, but Users that do not require the lower latency could continue to request an existing LCN connection. Similarly, it will provide an option for a User whose system is not compatible with a 40 Gb LCN connection, or does not have bandwidth demands that would require a 40 Gb LCN connection, but that puts a premium on reducing latency. Additionally, the Exchange believes that the proposed change will enhance competition between competing marketplaces by enabling the Exchange to provide a low-latency connectivity option to Users that is similar to a service available on other markets. For example, The NASDAQ Stock Market LLC (''NASDAQ'') also makes a low-latency 10 Gb fiber connection option available to users of its co-location facilities.[13]

Finally, the Exchange notes that it operates in a highly competitive market in which market participants can readily favor competing venues if, for example, they deem fee levels at a particular venue to be excessive or if they determine that another venue's products and services are more competitive than on the Exchange. In such an environment, the Exchange must continually review, and consider adjusting, the services it offers as well as any corresponding fees and credits to remain competitive with other exchanges. For the reasons described above, the Exchange believes that the proposed rule change reflects this competitive environment.

C. Self-Regulatory Organization's Statement on Comments on the Proposed Rule Change Received From Members, Participants, or Others

No written comments were solicited or received with respect to the proposed rule change.

[13] *See* NASDAQ Rule 7034. NASDAQ refers to this connectivity option as the ''10 Gb Ultra'' connection. *See also* Securities Exchange Act Release No. 70129 (August 7, 2013), 78 FR 49308 (August 13, 2013) (SR–NASDAQ–2013–099).

III. Date of Effectiveness of the Proposed Rule Change and Timing for Commission Action

The Exchange has filed the proposed rule change pursuant to Section 19(b)(3)(A)(iii) of the Act [14] and Rule 19b–4(f)(6) thereunder.[15] Because the foregoing proposed rule change does not: (1) Significantly affect the protection of investors or the public interest; (2) impose any significant burden on competition; and (3) by its terms does not become operative for 30 days after the date of this filing, or such shorter time as the Commission may designate if consistent with the protection of investors and the public interest, the proposed rule change has become effective pursuant to Section 19(b)(3)(A) of the Act [16] and Rule 19b–4(f)(6) thereunder.[17]

A proposed rule change filed under Rule 19b–4(f)(6) [18] normally does not become operative prior to 30 days after the date of the filing. However, pursuant to Rule 19b–4(f)(6)(iii),[19] the Commission may designate a shorter time if such action is consistent with the protection of investors and the public interest. The Exchange has asked the Commission to waive the 30-day operative delay so that the proposal may become operative immediately upon filing. The Exchange requested waiver of the 30-day operative delay in order to immediately implement the proposed rule change so that Users may experience the benefits of such proposed change as soon as possible. The Exchange represented that a waiver of the operative delay would be in the public interest and would contribute to the protection of investors because it would permit additional Users to have access to lower-latency LCN connections, including those Users whose systems are not compatible with the existing 40 Gb LCN connection or who do not have bandwidth demands that would require a 40 Gb LCN connection. The Exchange further stated that the benefit of such lower latency would indirectly benefit customers of such Users and would serve to protect investors and the public interest, in that the LCN 10 Gb LX connection would provide Users with the most efficient means of processing customer orders that are sent to the Exchange's trading and execution system from the data center. The Exchange stated its belief that the proposed LCN 10 Gb LX connection does not raise any novel or unique issues or concerns. The Exchange further stated that it does not anticipate any negative consequence, whether for Users, the investing public or otherwise, as a result of granting a waiver of the operative delay. For the above reasons, the Commission believes waiver of the operative delay is appropriate and hereby grants the Exchange's request and designates the proposal operative upon filing.[20]

At any time within 60 days of the filing of such proposed rule change, the Commission summarily may temporarily suspend such rule change if it appears to the Commission that such action is necessary or appropriate in the public interest, for the protection of investors, or otherwise in furtherance of the purposes of the Act. If the Commission takes such action, the Commission shall institute proceedings under Section 19(b)(2)(B) [21] of the Act to determine whether the proposed rule change should be approved or disapproved.

[14] 15 U.S.C. 78s(b)(3)(A)(iii).

[15] 17 CFR 240.19b–4(f)(6).

[16] 15 U.S.C. 78s(b)(3)(A).

[17] 17 CFR 240.19b–4(f)(6). In addition, Rule 19b–4(f)(6)(iii) requires a self-regulatory organization to provide the Commission with written notice of its intent to file the proposed rule change, along with a brief description and text of the proposed rule change, at least five business days prior to the date of filing of the proposed rule change, or such shorter time as designated by the Commission. The Exchange has met this requirement.

[18] 17 CFR 240.19b–4(f)(6).

[19] 17 CFR 240.19b–4(f)(6)(iii).

[20] For purposes only of waiving the 30-day operative delay, the Commission has also considered the proposed rule's impact on efficiency, competition, and capital formation. *See* 15 U.S.C. 78c(f).

[21] 15 U.S.C. 78s(b)(2)(B).

IV. Solicitation of Comments

Interested persons are invited to submit written data, views, and arguments concerning the foregoing, including whether the proposed rule change is consistent with the Act. Comments may be submitted by any of the following methods:

Electronic Comments

- Use the Commission's Internet comment form (*http://www.sec.gov/rules/sro.shtml*); or
- Send an email to *rule-comments@sec.gov.* Please include File Number SR–NYSE–2013–73 on the subject line.

Paper Comments

- Send paper comments in triplicate to Elizabeth M. Murphy, Secretary, Securities and Exchange Commission, 100 F Street NE., Washington, DC 20549–1090.

All submissions should refer to File Number SR–NYSE–2013–73. This file number should be included on the subject line if email is used. To help the Commission process and review your

comments more efficiently, please use only one method. The Commission will post all comments on the Commission's Internet Web site (*http://www.sec.gov/rules/sro.shtml*). Copies of the submission, all subsequent amendments, all written statements with respect to the proposed rule change that are filed with the Commission, and all written communications relating to the proposed rule change between the Commission and any person, other than those that may be withheld from the public in accordance with the provisions of 5 U.S.C. 552, will be available for Web site viewing and printing in the Commission's Public Reference Room, 100 F Street NE., Washington, DC 20549, on official business days between the hours of 10:00 a.m. and 3:00 p.m. Copies of the filing also will be available for inspection and copying at the principal office of the Exchange. All comments received will be posted without change; the Commission does not edit personal identifying information from submissions. You should submit only information that you wish to make available publicly. All submissions should refer to File Number SR–NYSE–2013–73 and should be submitted on or before December 12, 2013.

For the Commission, by the Division of Trading and Markets, pursuant to delegated authority.[22]

Kevin M. O'Neill,

Deputy Secretary.

[FR Doc. 2013–27903 Filed 11–20–13; 8:45 am]

BILLING CODE 8011–01–P

[22] 17 CFR 200.30–3(a)(12).

SECURITIES AND EXCHANGE COMMISSION

[Release No. 34–70892; File No. 4–668]

Joint Industry Plan; BATS Exchange, Inc., BATS–Y Exchange, Inc., BOX Options Exchange LLC, C2 Options Exchange, Incorporated, Chicago Board Options Exchange, Incorporated, Chicago Stock Exchange, Inc., EDGA Exchange, Inc., EDGX Exchange, Inc., Financial Industry Regulatory Authority, Inc., International Securities Exchange, LLC, Miami International Securities Exchange LLC, NASDAQ OMX BX, Inc., NASDAQ OMX PHLX LLC, The NASDAQ Stock Market LLC, National Stock Exchange, Inc., New York Stock Exchange LLC, NYSE MKT LLC, NYSE Arca, Inc. and Topaz Exchange, LLC; Notice of Filing of Proposed National Market System Plan Governing the Process of Selecting a Plan Processor and Developing a Plan for the Consolidated Audit Trail

November 15, 2013.

I. Introduction

Pursuant to Section 11A of the Securities Exchange Act of 1934 (''Exchange Act'' or ''Act'')[1] and Rule 608 thereunder (''Rule 608''),[2] notice is hereby given that on September 3, 2013, BATS Exchange, Inc., BATS–Y Exchange, Inc., BOX Options Exchange LLC, C2 Options Exchange, Incorporated, Chicago Board Options Exchange, Incorporated, Chicago Stock Exchange, Inc., EDGA Exchange, Inc., EDGX Exchange, Inc., Financial Industry Regulatory Authority, Inc., International Securities Exchange, LLC, Miami International Securities Exchange LLC, NASDAQ OMX BX, Inc., NASDAQ OMX PHLX LLC, The NASDAQ Stock Market LLC, National Stock Exchange, Inc., New York Stock Exchange LLC, NYSE MKT LLC, NYSE Arca, Inc., and Topaz Exchange, LLC (collectively, ''SROs'' or ''Participants'') filed with the Securities and Exchange Commission (''Commission'') the proposed National Market System (''NMS'') Plan Governing the Process of Selecting a Plan Processor and Developing a Plan for the Consolidated Audit Trail (''Plan''). A copy of the Plan is attached as Exhibit A hereto. The Commission is publishing this notice to solicit comments on the Plan.

II. Background

On July 11, 2012, the Commission adopted Rule 613 under the Exchange Act[3] to require the SROs to jointly submit an NMS plan (the ''CAT NMS Plan'') to create, implement, and maintain a consolidated order tracking system, or consolidated audit trail, with respect to the trading of NMS securities, that would capture customer and order event information for orders in NMS securities, across all markets, from the time of order inception through routing, cancellation, modification, or execution.[4] Rule 613 outlines a broad framework for the creation, implementation, and maintenance of the consolidated audit trail, including the minimum elements the Commission believes are necessary for an effective consolidated audit trail.[5] In instances where Rule 613 sets forth minimum requirements for the consolidated audit trail, the Rule provides flexibility to the SROs to draft the requirements of the CAT NMS Plan in a way that best achieves the objectives of the Rule.[6]

As described in more detail below, the SROs concluded that publication of a request for proposal was necessary to ensure that potential alternative solutions to creating the consolidated audit trail can be presented and considered by the SROs and that a detailed and meaningful cost/benefit analysis can be performed, both of which are required considerations to be addressed in the CAT NMS Plan. The SROs also decided, for the reasons set forth below, to file the Plan to govern how the SROs will proceed with formulating and submitting the CAT NMS Plan—and, as part of that process, how to review, evaluate, and narrow down the bids submitted in response to the request for proposal—and ultimately choosing the plan processor that would build, operate, and maintain the consolidated audit trail.

III. Description of the Plan

Set forth in this Section III is the statement of the purpose of the Plan, along with the information required by Rule 608(a)(4) and (5) under the Exchange Act,[7] prepared and submitted by the SROs with the Plan to the Commission.[8]

A. Statement of Purpose

Rule 613 requires the Participants to ''jointly file . . . a national market system plan to govern the creation,

[1] 15 U.S.C. 78k–1.

[2] 17 CFR 242.608.

[3] 17 CFR 242.613.

[4] Securities Exchange Act Release No. 67457 (July 18, 2012), 77 FR 45722 (August 1, 2012) (''Adopting Release'').

[5] *Id.* at 45742.

[6] *Id.*

[7] *See* 17 CFR 242.608(a)(4) and (a)(5).

[8] *See* Letter from the SROs, to Elizabeth Murphy, Secretary, Commission, dated August 23, 2013.

implementation, and maintenance of a consolidated audit trail and central repository.'' [9] The Plan being submitted for approval by the Participants governs the process of selecting a Plan Processor for the consolidated audit trail and developing the CAT NMS Plan.

As adopted, Rule 613 ''expand[ed] the set of solutions that could be considered by the SROs for creating, implementing, and maintaining a consolidated audit trail and [provided] the SROs with increased flexibility in how they choose to meet the requirements of the adopted Rule.'' [10] As the Commission noted in the Adopting Release, because of this expanded solution set, ''the adopted Rule now requires the [Participants] to provide much more information and analysis to the Commission as part of their [CAT NMS Plan] submission.'' [11] Specifically, these requirements were incorporated into Rule 613 as a series of twelve ''considerations'' that the Participants must address in the CAT NMS Plan, including:

- the specific details and features of the CAT NMS Plan;
- the Participants' analysis of the CAT NMS Plan's costs and impact on competition, efficiency, and capital formation;
- the process in developing the CAT NMS Plan;
- information about the implementation of the CAT NMS Plan; and
- milestones for the creation of the consolidated audit trail.

As part of the discussion of these ''considerations,'' the Participants must include ''cost estimates for the proposed solution, and a discussion of the costs and benefits of alternative [sic] solutions considered but not proposed.'' [12] In addition, the Commission noted that Rule 613 requires that the [Participants]: (1) Provide an estimate of the costs associated with creating, implementing, and maintaining the consolidated audit trail under the terms of the [CAT NMS Plan] submitted to the Commission for its consideration; (2) discuss the costs, benefits, and rationale for the choices made in developing the [CAT NMS Plan] submitted; and (3) provide their own analysis of the submitted [CAT NMS Plan's] potential impact on competition, efficiency, and capital formation.[13]

The Commission stated that these detailed requirements are ''intended to ensure that the Commission and the public have sufficiently detailed information to carefully consider all aspects of the [CAT NMS Plan] ultimately submitted by the [Participants].'' [14] Indeed, the Commission expressed its expectation that ''the [Participants] will seriously consider various options as they develop the [CAT NMS Plan] to be submitted to the Commission for its consideration.'' [15]

In light of the numerous specific requirements of Rule 613, on March 7, 2013, the Commission granted the Participants an extension of the time in which to file the CAT NMS Plan so that the Participants could ensure that all potential options for the consolidated audit trail could be considered. As noted in the Exemptive Letter, the Participants concluded that publication of a request for proposal (''RFP'') was necessary to ensure that potential alternative solutions to creating the consolidated audit trail can be presented and considered by the Participants and that a detailed and meaningful cost/benefit analysis can be performed, both of which are required considerations to be addressed in the CAT NMS Plan.

The Participants published the RFP on February 26, 2013, and requested that any potential bidders notify the Participants of their intent to bid by March 5, 2013. Thirty-one firms submitted an intent to bid in response to the publication of the RFP; four of the firms were Participants or Affiliates of Participants.[16]

The Plan is intended to govern how the Participants will proceed with formulating and submitting the CAT NMS Plan—and, as part of that process, reviewing, evaluating, and narrowing down the Bids submitted in response to the RFP—and ultimately choosing the Plan Processor. Because of the important regulatory obligations that exist for each Participant with respect to the creation and operation of the consolidated audit trail, it is essential that each Participant contribute to the development of the CAT NMS Plan. The Participants recognize, however, that Participants or Affiliates of Participants may also be Bidders seeking to serve as the Plan Processor or may be included as part of a Bid. The Participants have sought to mitigate these potential conflicts of interest by including in the Plan multiple provisions, which are described below, designed to balance these competing factors. The Participants believe that the Plan achieves this balance by allowing all Participants to participate meaningfully in the process of creating the CAT NMS Plan and choosing the Plan Processor while imposing strict requirements to ensure that the participation is independent and that the process is fair and transparent.

Section III of the Plan establishes the overall governance structure the Participants have chosen.[17] Specifically, the Participants propose establishing an Operating Committee responsible for formulating, drafting, and filing with the Commission the CAT NMS Plan and for ensuring the Participants' joint obligations under Rule 613 are met in a timely and efficient manner. As set forth in Section III(B) of the Plan, each Participant will select one individual and one substitute to serve on the Operating Committee; however, other representatives of each Participant are permitted to attend Operating Committee meetings. Section III of the Plan also establishes the procedures for the Operating Committee, including provisions regarding meetings, Participants' voting rights, and voting requirements.

Sections V and VI of the Plan [18] set forth the process for the Participants' evaluation of Bids and the selection process for narrowing down the Bids and choosing the Plan Processor.[19]

[9] 17 CFR 242.613(a)(1). Rule 613(a) requires that the Participants jointly file the CAT NMS Plan ''on or before 270 days from the date of publication of the Adopting Release in the **Federal Register**.'' The release adopting Rule 613 was published in the **Federal Register** on August 1, 2012. *See* Adopting Release, *supra* note 4. On March 7, 2013, the Commission provided a temporary exemption to the Participants to permit them to file the CAT NMS Plan by December 6, 2013. *See* Exchange Act Release No. 69060 (March 7, 2013), 78 FR 15771 (March 12, 2013) (''Exemptive Order''); *see also* Letter from Robert L.D. Colby, Chief Legal Officer, FINRA, to Elizabeth M. Murphy, Secretary, Securities and Exchange Commission, dated February 7, 2013 (''Exemptive Letter'').

[10] Adopting Release, *supra* note 4 at 45725.

[11] *Id. See also id.* at 45789.

[12] *Id.* at 45789.

[13] *Id.* at 45726.

[14] *Id.* at 45725.

[15] *Id.* at 45725 and 45789.

[16] Since that time, six firms—including one Participant and one Affiliate of a Participant—have formally notified the Participants that they will not submit Bids as primary bidders. A list of firms that submitted an intent to bid is located on the Participants' Web site at *catnmsplan.com.*

[17] Section I of the Plan sets forth the definitions used throughout the Plan. Section II of the Plan lists the Participants, as well as establishing the requirements to admit new Participants or to withdraw as a Participant.

[18] Section IV of the Plan governs amendments to the Plan. In general, except with respect to the addition of new Participants, any change to the Plan requires a written amendment that sets forth the change, is executed by over two-thirds of the Participants, and is approved by the Commission pursuant to Rule 608 or otherwise becomes effective under Rule 608.

[19] Initial steps in the evaluation and selection process will be performed pursuant to the Plan; the final two rounds of evaluation and voting, as well as the final selection of the Plan Processor, will be performed pursuant to the CAT NMS Plan. The sections of the CAT NMS Plan governing these final

Continued

Pursuant to these Sections, the evaluation of Bids and selection of the Plan Processor will be performed by a Selection Committee composed of one senior officer from each Participant (referred to as the ''Voting Senior Officer'').[20] Because of the potential conflicts of interest noted above, the Plan includes multiple requirements to increase the independence of the Voting Senior Officer who participates on the Selection Committee on behalf of a Bidding Participant.[21] The criteria set forth in Section V(D) of the Plan include requirements concerning the Voting Senior Officer's job responsibilities, decision-making authority, and reporting, and require that the Bidding Participant establish functional separation between its Plan responsibilities and its business/commercial (including market operations) functions. In addition, the criteria prohibit any disclosure of information regarding the Bid to the Voting Senior Officer and prohibit the Voting Senior Officer from disclosing any non-public information gained in his or her role as such. These criteria are intended to insulate the Voting Senior Officer from any inside knowledge regarding the Bid (while also preventing any information about the evaluation process from being shared with staff preparing the Bidding Participant's Bid) and to reduce any potential personal motivation that may exist that could improperly influence a Voting Senior Officer's decisions.[22]

Because of the integral role played by the Selection Committee, any action requiring a vote by the Selection Committee under the Plan can only be taken in a meeting in which all Participants entitled to vote are present. All votes taken by the Selection Committee are confidential and non-public, and a Participant's individual votes will not be disclosed to other Participants or to the public. For this reason, the Plan provides that votes of the Selection Committee will be tabulated by an independent third party approved by the Operating Committee. Moreover, the Participants do not anticipate that aggregate votes or anonymized voting distribution numbers will be provided to the Participants following votes by the Selection Committee.

The Plan divides the review and evaluation of Bids and selection of the Plan Processor into four separate stages. After Bids are received,[23] Section VI(A) of the Plan provides that the Selection Committee will review all submitted Bids to determine which Bids are Qualified Bids (*i.e.,* Bids that contain sufficient information to allow the Voting Senior Officers to meaningfully assess and evaluate the Bid).[24] At this initial stage, if two-thirds or more of the Participants determine that a Bid does not meet the threshold for a Qualified Bid, the Bid will be eliminated from further consideration. The Participants believe this initial step will ensure that only those Bids meeting a minimum level of detail and sufficiency will move forward in the process, and insufficient Bids can be eliminated.

Following the elimination of Bids that are not Qualified Bids, each Qualified Bidder will be provided the opportunity to present its Bid to the Selection Committee. After the Qualified Bidders have made their presentations, the Selection Committee will establish a ''shortlist'' of Bids that will move on in the process. The Plan provides that, if there are six or fewer Qualified Bids submitted, all of those Bids will be selected as ''Shortlisted Bids.''[25] If there are more than six but fewer than eleven Qualified Bids, the Selection Committee will choose five Shortlisted Bids, and if there are eleven or more Qualified Bids, the Selection Committee will choose 50% of the Qualified Bids as Shortlisted Bids.[26]

When voting to select the Shortlisted Bids from among the Qualified Bids, each Voting Senior Officer must rank his or her selections, and the points assigned to the rankings increase in single-point increments. Thus, for example, if five Shortlisted Bids are to be chosen, each Participant will vote for its top five choices in rank order, with the first choice being given five points, the second choice four points, the third choice three points, the fourth choice two points, and the fifth choice one point. The Participants considered numerous alternative voting procedures but determined that the proposed process appropriately balances the need to differentiate among Qualified Bids while also ensuring that each Qualified Bid receives due consideration for inclusion as a Shortlisted Bid since each Voting Senior Officer must select multiple Qualified Bids for inclusion as a Shortlisted Bid. Further, while the Participants believe that the independence indicia sufficiently address any potential conflicts of interest that may arise with respect to Bids with which a Participant is affiliated, the proposed process will further mitigate potential conflicts because each Voting Senior Officer must select multiple unaffiliated Qualified Bids. The Participants believe this step is appropriate both to ensure that Bidders submit a complete and thorough Bid initially and so that Qualified Bidders will know whether they have a realistic opportunity to be selected as the Plan Processor after the CAT NMS Plan is approved.

To further reduce the impact of potential conflicts of interest in

two voting rounds are set forth in Sections VI(D) and (E) of the Plan and will be incorporated into the CAT NMS Plan. The Participants believe it is essential that the entire process be laid out in the Plan so that the Commission can consider and approve the entire evaluation and selection process, even though the final two voting rounds, including the selection of the Plan Processor, will not be conducted until after the approval of the CAT NMS Plan.

[20] In the case of Affiliated Participants, one individual may be (but is not required to be) the Voting Senior Officer for more than one or all of the Affiliated Participants.

[21] The Plan defines a ''Bidding Participant'' broadly to include any Participant that (1) submits a Bid; (2) is an Affiliate of an entity that submits a Bid; or (3) is included, or is an Affiliate of an entity that is included, as a Material Subcontractor as part of a Bid. A ''Material Subcontractor'' is ''any entity that is known to the Participant to be included as part of a Bid as a vendor, subcontractor, service provider, or in any other similar capacity and, excluding products or services offered by the Participant to one or more Bidders on terms subject to a fee filing approved by the SEC, (1) is anticipated to derive 5% or more of its annual revenue in any given year from services provided in such capacity; or (2) accounts for 5% or more of the total estimated annual cost of the Bid for any given year.'' The Plan provides that ''[a]n entity will not be considered a 'Material Subcontractor' solely due to the entity providing services associated with any of the entity's regulatory functions as a self-regulatory organization registered with the SEC.''

[22] As described below, even with the independence criteria in place, the Plan also requires recusal from certain votes.

[23] The Participants anticipate that Bids must be submitted four weeks after the Commission approves the Plan.

[24] The Plan defines a Qualified Bid as ''a Bid that is deemed by the Selection Committee to include sufficient information regarding the Bidder's ability to provide the necessary capabilities to create, implement, and maintain a consolidated audit trail so that such Bid can be effectively evaluated by the Selection Committee.'' The Plan provides that, ''[w]hen evaluating whether a Bid is a Qualified Bid, each member of the Selection Committee shall consider whether the Bid adequately addresses the evaluation factors set forth in the RFP, and apply such weighting and priority to the factors as such member of the Selection Committee deems appropriate in his or her professional judgment.''

[25] In the Letter submitted by the SROs describing the Plan, the SROs state that the Plan provides that, if there are *fewer than six* Qualified Bids submitted, all of those bids will be selected as Shortlisted Bids. *See supra* note 8. The Commission notes, however, that Section IV(B)(2) of the Plan states, ''If there are *six or fewer* Qualified Bids, all such Qualified Bids shall be Shortlisted Bids.'' (emphasis added)

[26] The Plan provides that, if there is an odd number of Qualified Bids, the number of Shortlisted Bids to be chosen will be rounded up to the next whole number (*e.g.,* if there are thirteen Qualified Bids, seven Shortlisted Bids will be selected). In the event of a tie to select the Shortlisted Bids, all such tied Qualified Bids will be Shortlisted Bids.

choosing Shortlisted Bids, the Plan also provides that at least two Non-SRO Bids must be included as Shortlisted Bids, provided there are two Non-SRO Bids that are Qualified Bids.[27] If, following the vote, no Non-SRO Bids have been selected as Shortlisted Bids, the Plan requires that the two Non-SRO Bids receiving the highest cumulative votes be added as Shortlisted Bids. If, in this scenario, a single Non-SRO Bid was a Qualified Bid, that Non-SRO Bid would be added as a Shortlisted Bid.

Following the selection of Shortlisted Bids, the Participants will identify the optimal proposed solution(s) for the consolidated audit trail for inclusion in the CAT NMS Plan for submission to the Commission. Following approval of the CAT NMS Plan by the Commission, the Selection Committee will determine, by majority vote, which Shortlisted Bidders will be provided the opportunity to revise their Bids in light of the provisions in the final, approved CAT NMS Plan. In making a decision whether to permit a Shortlisted Bidder to revise its Bid, the Selection Committee will consider the provisions in the CAT NMS Plan as well as the content of the Shortlisted Bidder's initial Bid. To reduce potential conflicts of interest, the Plan also provides that if a Bid submitted by or including a Bidding Participant or an Affiliate of a Bidding Participant is a Shortlisted Bidder, that Bidding Participant will be recused from all votes regarding whether a Shortlisted Bidder will be permitted to revise its Bid.

After any permitted revisions have been received, the Selection Committee will select the Plan Processor from the Shortlisted Bids in two rounds of voting where, subject to the recusal provision described below, each Participant has one vote. In the first round, each Participant will select a first and second choice, with the first choice receiving two points and the second choice receiving one point. The two Shortlisted Bids receiving the highest cumulative scores in the first round will advance to the second round.[28] In the event of a tie, the tie will be broken by assigning one point per vote to the tied Shortlisted Bids, and the Shortlisted Bid with the most votes will advance. If this procedure fails to break the tie, a revote will be taken on the tied Bids with each vote receiving one point. If the tie persists, the Participants will identify areas for discussion, and revotes will be taken until the tie is broken.

Once two Shortlisted Bids have been chosen, the Participants will vote for a single Shortlisted Bid from the final two to determine the Plan Processor. If one or both of the final Bids is submitted by or includes a Bidding Participant or an Affiliate of a Bidding Participant, the Bidding Participant must recuse itself from the final vote. In the event of a tie, a revote will be taken. If the tie persists, the Participants will identify areas for discussion and, following these discussions, revotes will be taken until the tie is broken. As set forth in Section VII of the Plan, following the selection of the Plan Processor, the Participants will file with the Commission a statement identifying the Plan Processor and including the information required by Rule 608.

B. Governing or Constituent Documents

Not applicable.

C. Implementation of Plan

The terms of the Plan will be operative immediately upon approval of the Plan by the Commission. The Participants have announced that Bids must be submitted four weeks after the Commission's approval of the Plan. The Participants will begin reviewing and evaluating the Bids pursuant to Section VI of the Plan upon receipt of the Bids.

The Participants anticipate that it will take seven months to evaluate the Bids and submit the CAT NMS Plan to the Commission pursuant to Sections VI(A) and (B) of the Plan.[29] As noted above, upon approval of the CAT NMS Plan, the Plan will automatically terminate. The review of revised Shortlisted Bids and the selection of the Plan Processor will be undertaken as set forth in Sections VI(D) and (E) of the Plan as those sections are incorporated into the CAT NMS Plan.

D. Development and Implementation Phases

Not applicable.

E. Analysis of Impact on Competition

The Plan does not impose any burden on competition that is not necessary or appropriate in furtherance of the purposes of the Exchange Act. The Participants do not believe that the Plan introduces terms that are unreasonably discriminatory for the purposes of Section 11A(c)(1)(D) of the Exchange Act. As noted in Section A, the Participants are aware that potential conflicts of interest are raised because a Participant, or an affiliate of a Participant, may be both submitting a Bid (or participating in a Bid) and participating in the evaluation of Bids to select the Plan Processor. As described in Section A, the Plan includes multiple provisions designed to mitigate the potential impact of these conflicts by imposing restrictions on the Voting Senior Officer and by requiring the recusal of Bidding Participants for certain votes taken by the Selection Committee. In addition, the Plan requires that at least two Non-SRO Bids be Shortlisted Bids to ensure Non-SRO Bids are given full and fair consideration.

F. Written Understanding or Agreements Relating to Interpretation of, or Participation in, Plan

The Participants have no written understandings or agreements relating to interpretations of, or participation in, the Plan other than those set forth in the Plan itself. Section III(F)(2)(a) of the Plan provides that interpretations of the Plan require approval by a majority of Participants entitled to vote. Section II(B) of the Plan sets forth how any entity registered as a national securities exchange or national securities association under the Exchange Act may become a Participant.

G. Approval of Amendment of the Plan

Not applicable.

H. Terms and Conditions of Access

Each currently approved national securities exchange and national securities association subject to Rule 613(a)(1) is a Participant in the Plan. Section II(B) of the Plan provides that any entity approved by the Commission as a national securities exchange or national securities association under the Exchange Act after the effectiveness of the Plan shall become a Participant by satisfying each of the following requirements: (1) Effecting an amendment to the Plan by executing a copy of the Plan as then in effect (with the only change being the addition of the new Participant's name in Section II of the Plan) and submitting such amendment to the Commission for approval; and (2) providing each then-current Participant with a copy of such executed Plan.

I. Method of Determination and Imposition, and Amount of, Fees and Charges

Not applicable.

[27] The Plan defines a ''Non-SRO Bid'' as ''a Bid that does not include a Bidding Participant.'' *See supra* note 21.

[28] Each round of voting throughout the Plan is independent of other rounds.

[29] The Participants recognize that a seven-month timeframe is inconsistent with the current obligation to submit the CAT NMS Plan by December 6, 2013. The Participants anticipate filing an exemptive request with the Commission to extend the date.

J. Method and Frequency of Processor Evaluation

Not applicable.

K. Dispute Resolution

The Plan does not include specific provisions regarding resolution of disputes between or among Participants. Section III(B) of the Plan provides for each Participant to designate an individual to represent the Participant as a member of an Operating Committee. Section III(A) of the Plan provides that the Operating Committee is responsible for: (1) Formulating, drafting, and filing with the Commission the CAT NMS Plan; and (2) ensuring the Participants' obligations under Rule 613 are met in a timely and efficient manner. Within the areas of its responsibilities and authority as set forth in the Plan, decisions made or actions taken by the Operating Committee, directly or by duly delegated individuals or Subcommittees, shall be binding upon each Participant, without prejudice to the rights of any Participant to seek redress from the Commission pursuant to Rule 608 or in any other appropriate forum.

IV. Solicitation of Comments

Interested persons are invited to submit written data, views, and arguments concerning the foregoing, including whether the Plan is consistent with the Act.

Comments may be submitted by any of the following methods:

Electronic Comments

- Use the Commission's Internet comment form (*http://www.sec.gov/rules/sro.shtml*); or
- Send an email to *rule-comments@sec.gov*. Please include File Number 4–668 on the subject line.

Paper Comments

- Send paper comments in triplicate to Elizabeth M. Murphy, Secretary, Securities and Exchange Commission, 100 F Street NE., Washington, DC 20549–1090.

All submissions should refer to File Number 4–668. This file number should be included on the subject line if email is used. To help the Commission process and review your comments more efficiently, please use only one method. The Commission will post all comments on the Commission's Internet Web site (*http://www.sec.gov/rules/sro.shtml*)). Copies of the submission, all subsequent amendments, all written statements with respect to the Plan that are filed with the Commission, and all written communications relating to the Plan between the Commission and any person, other than those that may be withheld from the public in accordance with the provisions of 5 U.S.C. 552, will be available for Web site viewing and printing in the Commission's Public Reference Room, 100 F Street NE., Washington, DC 20549, on official business days between the hours of 10:00 a.m. and 3:00 p.m. Copies of such filing also will be available for inspection and copying at the Participants' principal offices. All comments received will be posted without change; the Commission does not edit personal identifying information from submissions. You should submit only information that you wish to make available publicly.

All submissions should refer to File Number 4–668 and should be submitted on or before December 23, 2013.

By the Commission.

Kevin O'Neill,

Deputy Secretary.

EXHIBIT A

NATIONAL MARKET SYSTEM PLAN GOVERNING THE PROCESS OF SELECTING A PLAN PROCESSOR AND DEVELOPING A PLAN FOR THE CONSOLIDATED AUDIT TRAIL SUBMITTED TO THE SECURITIES AND EXCHANGE COMMISSION PURSUANT TO RULE 608 OF REGULATION NMS UNDER THE SECURITIES EXCHANGE ACT OF 1934

TABLE OF CONTENTS

Section	*Page*
Preamble	1
I. Definitions	2
II. Participants	4
III. Operating Committee	7
IV. Plan Amendments	11
V. Selection Committee	12
VI. RFP Bid Evaluation and Plan Processor Selection	16
VII. Implementation	21
VIII. Applicability of the Exchange Act	21
IX. Counterparts and Signatures	22

Consolidated Audit Trail: Plan Processor Evaluation and Selection Plan

Preamble

This Plan governs the process of: (1) Evaluating and selecting a Plan Processor for the consolidated audit trail; and (2) developing a national market system plan pursuant to SEC Rule 613 to create, implement, and maintain a consolidated audit trail. This Plan will automatically terminate upon the SEC's approval of the CAT NMS Plan. The Participants developed this Plan pursuant to Rule 608(a)(3) of Regulation NMS under the Exchange Act, which authorizes the Participants to act jointly in preparing, filing, and implementing national market system plans.

I. Definitions

(A) An ''Affiliate'' of an entity means any entity controlling, controlled by, or under common control with such entity.

(B) ''Affiliated Participant'' means any Participant controlling, controlled by, or under common control with another Participant.

(C) ''Bid'' means a proposal submitted by a Bidder in response to the RFP.

(D) ''Bidder'' means any entity, or any combination of separate entities, submitting a Bid.

(E) ''Bidding Participant'' means a Participant that: (1) Submits a Bid; (2) is an Affiliate of an entity that submits a Bid; or (3) is included, or is an Affiliate of an entity that is included, as a Material Subcontractor as part of a Bid.

(F) ''CAT NMS Plan'' means the NMS Plan to be jointly submitted to the Commission by the Participants pursuant to paragraph (a)(1) of SEC Rule 613.

(G) ''Commission'' or ''SEC'' means the United States Securities and Exchange Commission.

(H) ''Exchange Act'' means the Securities Exchange Act of 1934, as amended.

(I) ''Material Contract'' means any contract resulting in a total cost to all Participants of more than $1,000,000.

(J) ''Material Subcontractor'' means any entity that is known to the Participant to be included as part of a Bid as a vendor, subcontractor, service provider, or in any other similar capacity and, excluding products or services offered by the Participant to one or more Bidders on terms subject to a fee filing approved by the SEC,

(1) is anticipated to derive 5% or more of its annual revenue in any given year from services provided in such capacity; or (2) accounts for 5% or more of the total estimated annual cost of the Bid for any given year. An entity will not be considered a ''Material Subcontractor'' solely due to the entity providing services associated with any of the entity's regulatory functions as a self-regulatory organization registered with the SEC.

(K) ''NMS Plan'' shall have the same meaning as ''[n]ational market system plan'' provided in Rule 600(b)(43) of Regulation NMS under the Exchange Act.

(L) ''Non-SRO Bid'' means a Bid that does not include a Bidding Participant.

(M) ''Operating Committee'' shall have the meaning provided in Section III of the Plan.

(N) ''Participant'' means a party to the Plan.

(O) ''Plan'' means the plan set forth in this instrument, as amended from time to time in accordance with its provisions.

(P) ''Plan Processor'' means the entity jointly selected by the Participants pursuant to SEC Rule 613, the Plan, and the CAT NMS Plan to perform the consolidated audit trail processing functions required by SEC Rule 613 and set forth in the RFP.

(Q) ''Qualified Bid'' means a Bid that is deemed by the Selection Committee to include sufficient information regarding the Bidder's ability to provide the necessary capabilities to create, implement, and maintain a consolidated audit trail so that such Bid can be effectively evaluated by the Selection Committee. When evaluating whether a Bid is a Qualified Bid, each member of the Selection Committee shall consider whether the Bid adequately addresses the evaluation factors set forth in the RFP, and apply such weighting and priority to the factors as such member of the Selection Committee deems appropriate in his or her professional judgment. The determination of whether a Bid is a Qualified Bid shall be determined pursuant to the process set forth in Section VI of the Plan.

(R) ''Qualified Bidder'' means a Bidder that has submitted a Qualified Bid.

(S) ''RFP'' means the ''Consolidated Audit Trail National Market System Plan Request for Proposal'' published by the Participants on February 26, 2013, as amended from time to time.

(T) ''Selection Committee'' means the committee formed pursuant to Section V of the Plan.

(U) ''SEC Rule 608'' means Rule 608 of Regulation NMS under the Exchange Act.

(V) ''SEC Rule 613'' means Rule 613 of Regulation NMS under the Exchange Act.

(W) ''Shortlisted Bid'' means a Bid submitted by a Qualified Bidder and selected as a Shortlisted Bid by the Selection Committee pursuant to Section VI(B) of the Plan.

(X) ''Shortlisted Bidder'' means a Qualified Bidder that has submitted a Bid selected as a Shortlisted Bid.

(Y) ''Voting Senior Officer'' means the senior officer of a Participant chosen to serve on the Selection Committee pursuant to Section V of the Plan.

II. Participants

(A) List of Participants

The Participants are as follows:

(1) BATS Exchange, Inc.
(2) BATS Y-Exchange, Inc.
(3) BOX Options Exchange LLC
(4) C2 Options Exchange, Incorporated
(5) Chicago Board Options Exchange, Incorporated
(6) Chicago Stock Exchange, Inc.
(7) EDGA Exchange, Inc.
(8) EDGX Exchange, Inc.
(9) Financial Industry Regulatory Authority, Inc.
(10) International Securities Exchange, LLC
(11) Miami International Securities Exchange LLC
(12) NASDAQ OMX BX, Inc.
(13) NASDAQ OMX PHLX LLC
(14) The Nasdaq Stock Market LLC
(15) National Stock Exchange, Inc.
(16) New York Stock Exchange LLC
(17) NYSE MKT LLC
(18) NYSE Arca, Inc.
(19) Topaz Exchange, LLC

(B) Admission of New Participants

Any entity approved by the SEC as a national securities exchange or national securities association under the Exchange Act after the effectiveness of the Plan shall become a Participant by satisfying each of the following requirements: (1) effecting an amendment to the Plan by executing a copy of the Plan as then in effect (with the only change being the addition of the new Participant's name in Section II of the Plan) and submitting such amendment to the SEC for approval; and (2) providing each then-current Participant with a copy of such executed Plan. The amendment shall be effective when it is approved by the SEC in accordance with SEC Rule 608 or otherwise becomes effective pursuant to SEC Rule 608.

(C) Withdrawal of Participants

(1) A Participant may withdraw from the Plan upon written notice to each of the other Participants of no less than 30 days. The written notice must include the legal basis for the Participant's withdrawal from the Plan, including, if applicable, any required approvals or orders issued by the SEC.

(2) Withdrawal of a Participant shall be effectuated by an amendment to the Plan, including, if applicable, approval of any such amendment by the SEC.

(3) Notwithstanding a Participant's withdrawal from the Plan, the Participant shall remain liable for, and shall pay upon demand:

(a) its proportionate share of any costs, including those resulting from any Material Contracts, accrued or incurred before the effectiveness of the Participant's withdrawal;

(b) its proportionate share of any liabilities arising while the organization was a Participant that are based on actions jointly undertaken by the Participants pursuant to the Plan or in furtherance of the Participants' obligations pursuant to SEC Rule 613; and

(c) any costs incurred as a result of the Participant's withdrawal from the Plan.

(4) Except as aforesaid, a withdrawing Participant shall have no further obligation under the Plan or to any of the other Participants with respect to the period following the effectiveness of its withdrawal.

III. Operating Committee

(A) Authority

The Operating Committee shall be responsible for: (1) formulating, drafting, and filing with the SEC the CAT NMS Plan; and (2) ensuring the Participants' obligations under SEC Rule 613 are met in a timely and efficient manner. Within the areas of its responsibilities and authority as set forth in the Plan, decisions made or actions taken by the Operating Committee, directly or by duly delegated individuals or Subcommittees, shall be binding upon each Participant, without prejudice to the rights of any Participants to seek redress from the SEC pursuant to SEC Rule 608 or in any other appropriate forum.

(B) Composition

(1) Each Participant shall select from its staff one individual (the ''primary representative'') to represent the Participant as a member of the Operating Committee, together with a substitute(s) for such individual. In the case of Affiliated Participants, one individual may be the primary representative for all or some of the Affiliated Participants, and another individual may be the substitute for all or some of the Affiliated Participants.

(2) Regular meetings of the Operating Committee may be attended by each Participant's primary representative and its substitute(s), and may be attended by other representatives of the Participant.

(3) Any organization that is not a Participant but has an actively pending Form 1 Application on file with the Commission to become a national securities exchange will be permitted to appoint one primary representative and one alternate representative to attend regularly scheduled Operating Committee meetings in the capacity of a non-voting observer/advisor. If the organization's Form 1 Application is withdrawn, returned, or otherwise not actively pending with the Commission for any reason, then the organization will no longer be eligible to be represented in the Operating Committee meetings. The Operating Committee shall have the discretion, in limited instances, to deviate from this policy if, as indicated by majority vote, the Operating Committee agrees that circumstances so warrant.

(4) Nothing in this section or elsewhere within the Plan shall authorize any person or organization other than Participants and their representatives to participate on the Operating Committee in any manner.

(C) Meetings

(1) Quorum

(a) Any action requiring a vote can only be taken at a meeting in which a quorum of all Participants is present. For actions requiring a majority vote of all Participants, a quorum of greater than 50% of all Participants entitled to vote must be present at the meeting before such a vote may be taken. For actions requiring at least a two-thirds vote of all Participants, a quorum of at least two-

thirds of all Participants entitled to vote must be present at the meeting before such a vote may be taken.

(b) For purposes of establishing a quorum, a Participant is considered present at a meeting only if a Participant's primary representative or substitute is either in physical attendance at the meeting or is participating by conference telephone or other acceptable electronic means.

(c) Any Participant recused from voting on a particular action pursuant to Paragraph (E) below shall not be considered to be ''entitled to vote'' for purposes of establishing whether a quorum is present for a vote to be taken on that action.

(2) Frequency

Meetings of the Operating Committee shall be held as needed at such times and locations as shall from time to time be determined by the Operating Committee. Meetings may be held by conference telephone or other acceptable electronic means if all Participants entitled to vote consent thereto in writing or by other means the Operating Committee deems acceptable.

(3) Written Consent

Any action may be taken without a meeting if a consent in writing, setting forth the action so taken, is sent to, via physical or electronic means, and agreed to by all Participants entitled to vote with respect to the subject matter thereof. The action taken shall be effective when the minimum number of Participants entitled to vote have approved the action, unless the consent specifies a different effective date.

(4) Minutes

Minutes of each meeting of the Operating Committee shall be taken.

(5) Subcommittees

In addition to the Selection Committee established pursuant to Section V of the Plan, the Operating Committee may establish any Subcommittees it deems necessary in fulfilling its obligations under the Plan. Membership on any Subcommittee is open to any Participant indicating a desire to participate. Minutes of each meeting of any Subcommittee shall be taken.

(D) Voting Rights

(1) Unless recused pursuant to Paragraph (E) below, each Participant shall have one vote on all matters considered by the Operating Committee.

(2) Where one individual represents more than one Affiliated Participant, either as the primary representative or as a substitute, such individual will have the right to vote on behalf of each such Affiliated Participant. The substitute(s) may participate in deliberations of the Operating Committee and shall be considered a voting member thereof only in the absence of the primary representative.

(E) Conflicts and Recusals

A Participant may recuse itself from voting on any matter under consideration by the Operating Committee if the Participant determines that voting on such matter raises a conflict of interest. Except as provided in Sections V(B)(2) and V(B)(3) of the Plan, no Participant is automatically recused from voting on any matter.

(F) Voting Requirements

(1) Supermajority Voting Requirements

The following actions require approval by at least two-thirds of Participants entitled to vote:

(a) Amendments to the Plan, other than amendments to add a new Participant; and

(b) Material Contracts.

(2) Majority Voting Requirements

The following actions require approval by a majority of Participants entitled to vote:

(a) Interpretations of the Plan; and

(b) Any other matters not specified as requiring a supermajority vote.

(G) Interpretations of Regulations

Interpretative questions arising during the time for which the Plan is operative will be presented to the Operating Committee, which will determine whether to seek interpretive guidance from the Commission or other regulatory body and, if so, in what form.

(H) Delegated Authority

Within the areas of its responsibilities, the Operating Committee may delegate an individual or Subcommittee to make decisions or take action on behalf of the Operating Committee. Any decision made or action taken by such duly delegated individual or Subcommittee within the scope of such delegation shall be binding upon each Participant.

IV. Plan Amendments

(A) General Amendments

Except with respect to the addition of new Participants, any proposed change in, addition to, or deletion from the Plan shall be effected by means of a written amendment to the Plan that: (1) sets forth the change, addition, or deletion; (2) is executed by over two-thirds of the Participants; and (3) is approved by the SEC pursuant to SEC Rule 608, or otherwise becomes effective under SEC Rule 608.

(B) New Participants

With respect to new Participants, an amendment to the Plan may be effected by the new national securities exchange or national securities association in accordance with Section II of the Plan.

V. Selection Committee

The Participants shall establish a Selection Committee in accordance with this Section V to: (1) evaluate and review Bids; and (2) select the Plan Processor.

(A) Composition

Each Participant shall select from its staff one senior officer (''Voting Senior Officer'') to represent the Participant as a member of a Selection Committee. In the case of Affiliated Participants, one individual may be (but is not required to be) the Voting Senior Officer for more than one or all of the Affiliated Participants. Where one individual serves as the Voting Senior Officer for more than one Affiliated Participant, such individual will have the right to vote on behalf of each such Affiliated Participant.

(B) Voting

(1) Unless recused pursuant to Paragraph (2) or (3) below, each Participant shall have one vote on all matters considered by the Selection Committee.

(2) No Bidding Participant shall vote on whether a Shortlisted Bidder will be permitted to revise its Bid pursuant to Section VI(D)(1) below if a Bid submitted by or including the Participant or an Affiliate of the Participant is a Shortlisted Bid.

(3) No Bidding Participant shall vote in the second round set forth in Section VI(E)(4) below if a Bid submitted by or including the Participant or an Affiliate of the Participant is part of the second round.

(4) All votes by the Selection Committee shall be confidential and non-public. All such votes will be tabulated by an independent third party approved by the Operating Committee, and a Participant's individual votes will not be disclosed to other Participants or to the public.

(C) Quorum

(1) Any action requiring a vote by the Selection Committee can only be taken at a meeting in which all Participants entitled to vote are present. Meetings of the Selection Committee shall be held as needed at such times and locations as shall from time to time be determined by the Selection Committee. Meetings may be held by conference telephone or other acceptable electronic means if all Participants entitled to vote consent thereto in writing or by other means the Selection Committee deems acceptable.

(2) For purposes of establishing a quorum, a Participant is considered present at a meeting only if the Participant's Voting Senior Officer is either in physical attendance at the meeting or is participating by conference telephone or other acceptable electronic means.

(3) Any Participant recused from voting on a particular action pursuant to Paragraph (B) above shall not be considered ''entitled to vote'' for purposes of establishing whether a quorum is present for a vote to be taken on that action.

(D) Qualifications for Voting Senior Officer of Bidding Participants

The following criteria must be met before a Voting Senior Officer is eligible to represent a Bidding Participant and serve on the Selection Committee:

(1) the Voting Senior Officer is not responsible for the Bidding Participant's market operations, and is responsible primarily for the Bidding Participant's legal and/or regulatory functions, including functions related to the formulation and implementation of the Bidding Participant's legal and/or regulatory program;

(2) the Bidding Participant has established functional separation of its legal and/or regulatory functions from its market operations and other business or commercial objectives;

(3) the Voting Senior Officer ultimately reports (including through the Bidding Participant's CEO or Chief Legal Officer/General Counsel) to an independent governing body that determines or oversees the Voting Senior Officer's compensation,

and the Voting Senior Officer does not receive any compensation (other than what is determined or overseen by the independent governing body) that is based on achieving business or commercial objectives;

(4) the Voting Senior Officer does not have responsibility for any non-regulatory functions of the Bidding Participant, other than the legal aspects of the organization performed by the Chief Legal Officer/General Counsel or the Office of the General Counsel;

(5) the ultimate decision making of the Voting Senior Officer position is tied to the regulatory effectiveness of the Bidding Participant, as opposed to other business or commercial objectives;

(6) promotion or termination of the Voting Senior Officer is not based on achieving business or commercial objectives;

(7) the Voting Senior Officer has no decision-making authority with respect to the development or formulation of the Bid submitted by or including the Participant or an Affiliate of the Participant; however, the staff assigned to developing and formulating such Bid may consult with the Voting Senior Officer, provided such staff members cannot share information concerning the Bid with the Voting Senior Officer;

(8) the Voting Senior Officer does not report to any senior officers responsible for the development or formulation of the Bid submitted by or including the Participant or by an Affiliate of the Participant; however, joint reporting to the Bidding Participant's CEO or similar executive officer by the Voting Senior Officer and senior staff developing and formulating such Bid is permissible, but the Bidding Participant's CEO or similar executive officer cannot share information concerning such Bid with the Voting Senior Officer;

(9) the compensation of the Voting Senior Officer is not separately tied to income earned if the Bid submitted by or including the Participant or an Affiliate of the Participant is selected; and

(10) the Voting Senior Officer, any staff advising the Voting Senior Officer, and any similar executive officer or member of an independent governing body to which the Voting Senior Officer reports may not disclose to any person any non-public information gained during the review of Bids, presentation by Qualified Bidders, and selection process. Staff advising the Voting Senior Officer during the Bid review, presentation, and selection process may not include the staff, contractors, or subcontractors that are developing or formulating the Bid submitted by or including a Participant or an Affiliate of the Participant.

VI. RFP Bid Evaluation and Plan Processor Selection

(A) Initial Bid Review to Determine Qualified Bids

(1) The Selection Committee shall review all Bids in accordance with the process developed by the Selection Committee.

(2) After review, the Selection Committee shall vote on each Bid to determine whether such Bid is a Qualified Bid. A Bid that is deemed unqualified by at least a two-thirds vote of the Selection Committee will not be deemed a Qualified Bid and will be eliminated individually from further consideration.

(B) Selection of Shortlisted Bids

(1) Each Qualified Bidder shall be given the opportunity to present its Bid to the Selection Committee. Following the presentations by Qualified Bidders, the Selection Committee shall review and evaluate the Qualified Bids to select the Shortlisted Bids in accordance with the process in this Paragraph (B).

(2) If there are six or fewer Qualified Bids, all such Qualified Bids shall be Shortlisted Bids.

(3) If there are more than six Qualified Bids but fewer than eleven Qualified Bids, the Selection Committee shall select five Qualified Bids as Shortlisted Bids, subject to the requirement in Paragraph (d) below. Each Voting Senior Officer shall select a first, second, third, fourth, and fifth choice from among the Qualified Bids.

(a) A weighted score shall be assigned to each choice as follows:

- First—5 points
- Second—4 points
- Third—3 points
- Fourth—2 points
- Fifth—1 point

(b) The five Qualified Bids receiving the highest cumulative scores will be Shortlisted Bids.

(c) In the event of a tie to select the five Shortlisted Bids, all such tied Qualified Bids will be Shortlisted Bids.

(d) To the extent there are Non-SRO Bids that are Qualified Bids, the Shortlisted Bids selected pursuant to this Section VI(B)(3) must, if possible, include at least two Non-SRO Bids. If, following the vote set forth in this Section VI(B)(3), no Non-SRO Bid was selected as a Shortlisted Bid, the two Non-SRO Bids receiving the highest cumulative votes (or one Non-SRO Bid if a single Non-SRO Bid is a Qualified Bid) shall be added as Shortlisted Bids. If one Non-SRO Bid was selected as a Shortlisted Bid, the Non-SRO Bid receiving the next highest cumulative vote shall be added as a Shortlisted Bid.

(4) If there are eleven or more Qualified Bids, the Selection Committee shall select fifty percent of the Qualified Bids as Shortlisted Bids, subject to the requirement in Paragraph (d) below. If there is an odd number of Qualified Bids, the number of Shortlisted Bids chosen shall be rounded up to the next whole number (e.g., if there are thirteen Qualified Bids, then seven Shortlisted Bids will be selected). Each Voting Senior Officer shall select as many choices as Shortlisted Bids to be chosen.

(a) A weighted score shall be assigned to each choice in single point increments as follows:

- Last—1 point
- Next-to-Last—2 points
- Second-from-Last—3 points
- Third-from-Last—4 points
- Fourth-from-Last—5 points
- Fifth-from-Last—6 points

For each additional Shortlisted Bid that must be chosen, the points assigned will increase in single point increments.

(b) The fifty percent of Qualified Bids (or, if there is an odd number of Qualified Bids, the next whole number above fifty percent of Qualified Bids) receiving the highest cumulative scores will be Shortlisted Bids.

(c) In the event of a tie to select the Shortlisted Bids, all such tied Qualified Bids will be Shortlisted Bids.

(d) To the extent there are Non-SRO Bids that are Qualified Bids, the Shortlisted Bids selected pursuant to this Section VI(B)(4) must, if possible, include at least two Non-SRO Bids. If, following the vote set forth in this Section VI(B)(4), no Non-SRO Bid was selected as a Shortlisted Bid, the two Non-SRO Bids receiving the highest cumulative votes (or one Non-SRO Bid if a single Non-SRO Bid is a Qualified Bid) shall be added as Shortlisted Bids. If one Non-SRO Bid was selected as a Shortlisted Bid, the Non-SRO Bid receiving the next highest cumulative vote shall be added as a Shortlisted Bid.

(C) Formulation of the CAT NMS Plan

(1) The Selection Committee shall review the Shortlisted Bids to identify optimal proposed solutions for the consolidated audit trail and provide descriptions of such proposed solutions for inclusion in the CAT NMS Plan. This process may, but is not required to, include iterative discussions with Shortlisted Bidders to address any aspects of an optimal proposed solution that were not fully addressed in a particular Bid.

(2) The Participants shall incorporate information on optimal proposed solutions in the CAT NMS Plan, including cost-benefit information as required by SEC Rule 613.

(D) Review of Shortlisted Bids Under the CAT NMS Plan

(1) Following approval of the CAT NMS Plan by the SEC, Shortlisted Bidders may be permitted to revise their Bids based on the provisions in the approved CAT NMS Plan, including further discussions if determined to be necessary by the Selection Committee. A Shortlisted Bidder will be permitted to revise its Bid only upon approval by a majority of the Selection Committee, subject to the recusal provision in Section V(B)(2) above, that revisions are necessary or appropriate in light of the content of the Shortlisted Bidder's initial Bid and the provisions in the approved CAT NMS Plan. A Shortlisted Bidder may not revise its Bid unless approved to do so by the Selection Committee pursuant to this paragraph.

(2) The Selection Committee shall review and evaluate all Shortlisted Bids, including any permitted revisions thereto submitted by Shortlisted Bidders. In performing the review and evaluation, the Selection Committee may consult with the Advisory Committee established pursuant to paragraph (b)(7) of SEC Rule 613.

(E) Selection of Plan Processor Under the CAT NMS Plan

(1) Under the CAT NMS Plan, there will be two rounds of voting by the Selection Committee to select the Plan Processor from among the Shortlisted Bidders. Each round shall be scored independently of prior rounds of voting, including the scoring to determine the Shortlisted Bids under Section VI(B) of the Plan.

(2) Each Participant shall have one vote in each round, except that no Bidding Participant shall be entitled to vote in the second round if the Participant's Bid, a Bid submitted by an Affiliate of the Participant, or a Bid including the Participant or an Affiliate of the Participant is considered in the second round. Until the second round, Bidding Participants may vote for any Shortlisted Bid.

(3) *First Round Voting by the Selection Committee*

(a) In the first round of voting, each Voting Senior Officer shall select a first and second choice from among the Shortlisted Bids.

(b) A weighted score shall be assigned to each choice as follows:

- First—2 points
- Second—1 point

(c) The two Shortlisted Bids receiving the highest cumulative scores in the first round will advance to the second round.

(d) In the event of a tie that would result in more than two Shortlisted Bids advancing to the second round, the tie will be broken by assigning one point per vote, with the Shortlisted Bid(s) receiving the highest number of votes advancing to the second round. If, at this point, the Shortlisted Bids remain tied, a revote will be taken with each vote receiving one point. If the revote results in a tie, the Participants shall identify areas for further discussion and, following any such discussion, voting will continue until two Shortlisted Bids are selected to advance to the second round.

(4) *Second Round Voting by the Selection Committee*

(a) In the second round of voting, each Voting Senior Officer, subject to the recusal provisions in Paragraph (E)(2) above, shall vote for one Shortlisted Bid.

(b) The Shortlisted Bid receiving the most votes in the second round shall be selected, and the proposed entity included in the Shortlisted Bid to serve as the Plan Processor shall be selected as the Plan Processor.

(c) In the event of a tie, a revote will be taken. If the revote results in a tie, the Participants shall identify areas for further discussions with the two Shortlisted Bidders. Following any such discussions, voting will continue until one Shortlisted Bid is selected.

VII. Implementation

Within two months after effectiveness of the CAT NMS Plan, the Participants will jointly select the winning Shortlisted Bid and the Plan Processor pursuant to the process set forth in Section VI of the Plan and as incorporated into the CAT NMS Plan. Following the selection of the Plan Processor, the Participants will file with the Commission a statement identifying the Plan Processor and including the information required by SEC Rule 608.

VIII. Applicability of the Exchange Act

The rights and obligations of the Participants in respect of the matters covered by the Plan shall at all times be subject to any applicable provisions of the Exchange Act, as amended, and any rules and regulations promulgated thereunder.

IX. Counterparts and Signatures

The Plan may be executed in any number of counterparts, no one of which need contain all signatures of all Participants, and as many of such counterparts as shall together contain all such signatures shall constitute one and the same instrument.

IN WITNESS WHEREOF, this Plan has been executed as of the 23rd day of August 2013 by each of the parties hereto.

BATS EXCHANGE, INC.

BY: _____

BATS Y–EXCHANGE, INC.

BY: _____

BOX OPTIONS EXCHANGE LLC

BY: _____

C2 OPTIONS EXCHANGE, INCORPORATED

BY: _____

CHICAGO BOARD OPTIONS EXCHANGE, INCORPORATED

BY: _____

CHICAGO STOCK EXCHANGE, INC.

BY: _____

EDGA EXCHANGE, INC.

BY: _____

EDGX EXCHANGE, INC.

BY: _____

FINANCIAL INDUSTRY REGULATORY AUTHORITY, INC.

BY: _____

INTERNATIONAL SECURITIES EXCHANGE, LLC

BY: _____

MIAMI INTERNATIONAL SECURITIES EXCHANGE, LLC

BY: _____

NASDAQ OMX BX, INC.

BY: _____

NASDAQ OMX PHLX LLC

BY: _____

THE NASDAQ STOCK MARKET LLC

BY: _____

NATIONAL STOCK EXCHANGE, INC.

BY: _____

NEW YORK STOCK EXCHANGE LLC

BY: _____

NYSE MKT LLC

BY: _____

NYSE ARCA, INC.

BY: _____

TOPAZ EXCHANGE, LLC

BY: _____

[FR Doc. 2013–27906 Filed 11–20–13; 8:45 am]

BILLING CODE 8011–01–P

SECURITIES AND EXCHANGE COMMISSION

[Release No. 34–70889; File No. SR–CBOE–2013–108]

Self-Regulatory Organizations; Chicago Board Options Exchange, Incorporated; Notice of Filing and Immediate Effectiveness of a Proposed Rule Change Relating To Amend Rule 53.23 Related to CBSX RMM Quoting Obligations

November 15, 2013.

Pursuant to Section 19(b)(1) of the Securities Exchange Act of 1934 (the ''Act''),[1] and Rule 19b–4 thereunder,[2] notice is hereby given that on November 8, 2013, Chicago Board Options Exchange, Incorporated (the ''Exchange'' or ''CBOE'') filed with the Securities and Exchange Commission (the ''Commission'') the proposed rule change as described in Items I, II, and III below, which Items have been prepared by the Exchange. The Commission is publishing this notice to solicit comments on the proposed rule change from interested persons.

I. Self-Regulatory Organization's Statement of the Terms of Substance of the Proposed Rule Change

The ''Exchange'' or ''CBOE'' proposes to amend Rule 53.23 related to CBOE Stock Exchange, LLC (''CBSX'') Remote Market-Maker (''RMM'') quoting obligations. The text of the proposed rule change is provided below.

(additions are *italicized;* deletions are [bracketed])

* * * * *

Chicago Board Options Exchange, Incorporated Rules

* * * * *

Rule 53.23 Obligations of CBSX Remote Market-Makers

(a) No changes.

(b) *Securities Other than those to which Appointed.* With respect to securities in which it does not hold an Appointment, a CBSX Remote Market-Maker should not engage in transactions for an account in which it has an interest which are disproportionate in relation to, or in derogation of, the performance of its obligations as specified in this Rule with respect to those securities to which it does hold an Appointment. [Whenever a CBSX Remote Market-Maker submits a two-sided quote in a security to which it is not appointed, it must fulfill the obligations established by this Rule for the rest of that trading session.]

. . . *Interpretations and Policies:*

[1] 15 U.S.C. 78s(b)(1).

[2] 17 CFR 240.19b–4.

.01 No changes.

* * * * *

The text of the proposed rule change is also available on the Exchange's Web site (*http://www.cboe.com/AboutCBOE/CBOELegalRegulatoryHome.aspx*), at the Exchange's Office of the Secretary, and at the Commission's Public Reference Room.

II. Self-Regulatory Organization's Statement of the Purpose of, and Statutory Basis for, the Proposed Rule Change

In its filing with the Commission, the Exchange included statements concerning the purpose of and basis for the proposed rule change and discussed any comments it received on the proposed rule change. The text of these statements may be examined at the places specified in Item IV below. The Exchange has prepared summaries, set forth in sections A, B, and C below, of the most significant aspects of such statements.

A. Self-Regulatory Organization's Statement of the Purpose of, and Statutory Basis for, the Proposed Rule Change

1. Purpose

The Exchange proposes to amend Rule 53.23 related to CBSX RMM quoting obligations. A ''CBSX Remote Market-Maker'' or ''RMM'' is a CBSX Trading Permit Holder that has agreed to fulfill certain market-making obligations thus qualifying for defined benefits as set forth in the CBOE Rules.[3] An RMM is an individual (either a Trading Permit Holder or nominee of a Trading Permit Holder organization) who is registered with CBSX for the purpose of making transactions as a dealer-specialist in the CBSX electronic trading system in accordance with the CBOE Rules. Registered RMMs are designated as specialists on CBSX for all purposes under the Act and the rules and regulations thereunder. RMMs may only operate in a remote capacity.[4]

In a manner prescribed by CBSX, an RMM may select an appointment (having the obligations of Rule 53.23) in one or more non-option securities traded on CBSX.[5] Under Rule 53.23, RMMs must, among other things:

- Enter into transactions that constitute a course of dealings reasonably calculated to contribute to the maintenance of a fair and orderly market;
- not enter into transactions or make bids or offers that are inconsistent with such a course of dealings;
- with respect to each security for which it holds an appointment, continuously engage in, to a reasonable degree under the existing circumstances, dealings for its own account when there exists, or it is reasonably anticipated that there will exist, a lack of price continuity, or a temporary disparity between the supply of and demand for a particular security;
- compete with other CBSX Market-Makers to improve markets;
- make markets which, absent changed market conditions, will be honored for the number of shares entered into the CBSX electronic trading system;
- engage in trading activity of which at least 75% of its total dollar amount traded on CBSX is in securities to which it has an appointment;
- with respect to securities in which an RMM does not hold an appointment, not engage in transactions for an account in which it has an interest that are disproportionate in relation to, or in derogation of, the performance of its obligations with respect to those securities in which it does hold an appointment;
- satisfy RMM obligations in a security in which it does not hold an appointment whenever an RMM submits a two-sided quote in that security for the rest of the trading session; and
- comply with two-sided and minimum size obligations and pricing obligations for bids and offers.

The proposed rule change amends Rule 53.23 to eliminate the requirement that a RMM fulfill the obligations established by Rule 53.23 when it submits a two-sided quote in a security to which it is not appointed for the rest of the trading session. The Exchange believes it is an unnecessary burden to impose these obligations on RMMs with respect to securities in which they do not hold appointments because they do not receive any corresponding benefits. RMMs only qualify for defined benefits in exchange for fulfillment of market-making obligations in their appointments. The Exchange believes the elimination of an obligation with no benefit that accompanies quoting in non-appointments will incentivize RMMs to submit quotes in non-appointments, which will provide additional liquidity and enhance competition in those non-appointments. CBSX will retain the ability to appoint RMMs in order to maintain a fair and orderly market.[6] RMMs will continue to be subject to the same obligations set forth in Rule 53.23, and receive the same defined benefits, with respect to their appointments, including the obligation to maintain continuous two-sided quotes in their appointments and contribute to the maintenance of a fair and orderly market.

The Exchange notes that other self-regulatory organizations with substantially similar market-maker quoting obligations do not require market-makers to fulfill those quoting obligations in securities in which they submit quotes but do not hold appointments.[7]

2. Statutory Basis

The Exchange believes the proposed rule change is consistent with the Act and the rules and regulations thereunder applicable to the Exchange and, in particular, the requirements of Section 6(b) of the Act.[8] Specifically, the Exchange believes the proposed rule change is consistent with the Section 6(b)(5)[9] requirements that the rules of an exchange be designed to prevent fraudulent and manipulative acts and practices, to promote just and equitable principles of trade, to foster cooperation and coordination with persons engaged in regulating, clearing, settling, processing information with respect to, and facilitating transactions in securities, to remove impediments to and perfect the mechanism of a free and open market and a national market system, and, in general, to protect investors and the public interest. Additionally, the Exchange believes the

[3] *See* Rule 50.3(2). The rules in Chapters 50 through 54 of the CBOE Rules are applicable only to the trading of non-option securities on CBSX. Trading of non-option securities on CBSX is also subject to the rules in Chapters 1 through 29 of the CBOE Rules to the same extent those rules apply to the trading of the products to which those rules apply, in some cases supplemented by the rules in Chapters 50 through 54, except for rules that have been replaced by rules in Chapters 50 through 54 and except where the context otherwise requires. Appendix A to Chapters 50 through 54 lists the rules in Chapters 1 through 29 of the CBOE rules that are applicable to the trading of equity securities on CBSX. Where appropriate, Appendix A also indicates that a rule in Chapters 1 through 29 has been supplemented by a rule in Chapters 50 through 54.

[4] *See* Rule 53.20.

[5] *See* Rule 53.22. CBSX may also appoint a RMM in one or more non-option securities trading on CBSX, giving attention to (1) the preference of registrants; (2) the maintenance and enhancement of competition among RMMs in each security; and (3) whether the financial resources available to an RMM enable it to satisfy the obligations set forth in Rule 53.23 with respect to each security in which it holds an appointment.

[6] CBSX also retains the authority under Rule 53.22(a) to suspend or terminate any RMM appointment if it is in the interest of a fair and orderly market.

[7] *See, e.g.,* BATS Exchange, Inc. Rule 11.8; Chicago Stock Exchange, Inc. Article 16, Rule 8; and National Stock Exchange, Inc. Rule 11.8.

[8] 15 U.S.C. 78f(b).

[9] 15 U.S.C. 78f(b)(5).

proposed rule change is consistent with the Section 6(b)(5) [10] requirement that the rules of an exchange not be designed to permit unfair discrimination between customers, issuers, brokers, or dealers.

In particular, the proposed rule change removes impediments to a free and open market, because it will incentivize RMMs to submit quotes in non-appointments by eliminating an obligation that accompanies that quoting, which will provide additional liquidity and enhance competition in those securities. CBSX will still have authority to suspend or terminate RMM appointments in the interest of a fair and orderly market, including if necessary to prevent fraudulent and manipulative acts and practices and protect investors or if an RMM does not satisfy its obligations with respect to its appointments. Additionally, the Exchange notes that other self-regulatory organizations with substantially similar market-maker quoting obligations do not impose a quoting obligation on market-makers in securities in which they submit quotes but do not hold appointments.[11] The Exchange also notes that the proposed rule change does not result in unfair discrimination, as it applies to all RMMs.

The Exchange believes that the rules applicable to CBSX RMMs will continue to provide an appropriate balance between obligations and benefits of RMMs. The proposed rule change eliminates an obligation of RMMs that has no accompanying benefit in non-appointments. RMMs only qualify for defined benefits in exchange for fulfillment of market-making obligations in their appointments. The proposed rule change has no impact on these obligations and corresponding benefits within RMM appointments, which remain in the same balance. RMMs must still comply with the same obligations set forth in Rule 53.23 and will receive the same benefits for fulfillment of those obligations with respect to their appointments, which the Exchange believes will continue to ensure continuous, two-sided quotations in their appointments. CBSX will retain the authority to make RMM appointments in securities in the interest of a fair and orderly market. The proposed rule change only eliminates an obligation with respect to RMM non-appointments, which obligation has no corresponding benefit. The Exchange believes it is unduly burdensome to continue to impose this obligation on RMMs if they receive nothing in return for fulfillment of the obligation and further believes this obligation reduces the incentive of RMMs to quote in non-appointments. Thus, the proposed rule change maintains the current balance between obligations and benefits of RMMs within their appointments and eliminates the imbalance between obligations and benefits of RMMs within their non-appointments.

B. Self-Regulatory Organization's Statement on Burden on Competition

CBOE does not believe that the proposed rule change will impose any burden on competition that is not necessary or appropriate in furtherance of the purposes of the Act because it provides the same relief to a group of similarly situated market participants—RMMs. The proposed rule change eliminates an obligation of RMMs that has no corresponding benefit within their non-appointments. All RMMs will be relieved of this unduly burdensome obligation but must still comply with the remaining obligations set forth in Rule 53.23 to receive the corresponding defined benefits within their appointments, which the Exchange believes will continue to ensure continuous, two-sided quotations in their appointments.

The Exchange notes that other self-regulatory organizations with substantially similar market-maker quoting obligations do not require market-makers to fulfill those quoting obligations in securities in which they submit quotes but do not hold appointments.[12] The Exchange does not believe the proposed rule change will help RMMs to the detriment of market participants on other exchanges. Rather, the Exchange believes that continuing to impose the quoting obligation that the Exchange proposes to eliminate will be detrimental to RMMs. It is unduly burdensome to require RMMs to satisfy an obligation for which they receive no benefits and to which market-makers at other exchanges with otherwise similar quoting obligations are not subject. RMMs will continue to be subject to the same obligations with respect to their appointments, which are similar to the market-making obligations within appointments imposed by other exchanges. The proposed rule change is merely eliminating an obligation with respect to RMMs non-appointments to which market-makers at other exchanges are not subject. Market participants on other exchanges are welcome to become CBSX Trading Permit Holders and trade as RMMs on CBSX if they determine that this proposed rule change has made CBSX more attractive or favorable.

CBOE believes that the proposed rule change will relieve any burden on, or otherwise promote, competition, as it will relieve RMMs of a quoting obligation that has no corresponding benefits within their non-appointments. The Exchange believes this will incentivize RMMs to submit quotes in non-appointments, which will provide additional liquidity and enhance competition in those securities.

C. Self-Regulatory Organization's Statement on Comments on the Proposed Rule Change Received From Members, Participants, or Others

The Exchange neither solicited nor received comments on the proposed rule change.

III. Date of Effectiveness of the Proposed Rule Change and Timing for Commission Action

Because the foregoing proposed rule change does not:

A. Significantly affect the protection of investors or the public interest;

B. impose any significant burden on competition; and

C. become operative for 30 days from the date on which it was filed, or such shorter time as the Commission may designate, it has become effective pursuant to Section 19(b)(3)(A) of the Act [13] and Rule 19b–4(f)(6) [14] thereunder. At any time within 60 days of the filing of the proposed rule change, the Commission summarily may temporarily suspend such rule change if it appears to the Commission that such action is necessary or appropriate in the public interest, for the protection of investors, or otherwise in furtherance of the purposes of the Act. If the Commission takes such action, the Commission will institute proceedings to determine whether the proposed rule change should be approved or disapproved.

IV. Solicitation of Comments

Interested persons are invited to submit written data, views, and arguments concerning the foregoing, including whether the proposed rule change is consistent with the Act. Comments may be submitted by any of the following methods:

Electronic Comments

- Use the Commission's Internet comment form (*http://www.sec.gov/rules/sro.shtml*); or

[10] *Id.*

[11] *See supra* note 7.

[12] *See supra* note 7.

[13] 15 U.S.C. 78s(b)(3)(A).

[14] 17 CFR 240.19b–4(f)(6).

• Send an email to *rule-comments@sec.gov.* Please include File Number SR–CBOE–2013–108 on the subject line.

Paper Comments

• Send paper comments in triplicate to Elizabeth M. Murphy, Secretary, Securities and Exchange Commission, 100 F Street NE., Washington, DC 20549–1090.

All submissions should refer to File Number SR–CBOE–2013–108. This file number should be included on the subject line if email is used. To help the Commission process and review your comments more efficiently, please use only one method. The Commission will post all comments on the Commission's Internet Web site (*http://www.sec.gov/rules/sro.shtml*). Copies of the submission, all subsequent amendments, all written statements with respect to the proposed rule change that are filed with the Commission, and all written communications relating to the proposed rule change between the Commission and any person, other than those that may be withheld from the public in accordance with the provisions of 5 U.S.C. 552, will be available for Web site viewing and printing in the Commission's Public Reference Room, 100 F Street NE., Washington, DC 20549, on official business days between the hours of 10:00 a.m. and 3:00 p.m. Copies of such filing also will be available for inspection and copying at the principal offices of the Exchange. All comments received will be posted without change; the Commission does not edit personal identifying information from submissions. You should submit only information that you wish to make available publicly. All submissions should refer to File Number SR–CBOE–2013–108, and should be submitted on or before December 12, 2013.

For the Commission, by the Division of Trading and Markets, pursuant to delegated authority.[15]

Kevin M. O'Neill,

Deputy Secretary.

[FR Doc. 2013–27904 Filed 11–20–13; 8:45 am]

BILLING CODE 8011–01–P

[15] 17 CFR 200.30–3(a)(12).

SECURITIES AND EXCHANGE COMMISSION

[Release No. 34–70885; File No. SR–TOPAZ–2013–11]

Self-Regulatory Organizations; Topaz Exchange, LLC; Notice of Filing and Immediate Effectiveness of Proposed Rule Change To Address the Treatment of Certain Stop Orders During a Limit State or Straddle State

November 15, 2013.

Pursuant to Section 19(b)(1) of the Securities Exchange Act of 1934 (the ''Act''),[1] and Rule 19b–4 thereunder,[2] notice is hereby given that on November 7, 2013, the Topaz Exchange, LLC (d/b/a ISE Gemini) (the ''Exchange'' or ''Topaz'') filed with the Securities and Exchange Commission (''Commission'') the proposed rule change as described in Items I, II, and III below, which items have been prepared by the Exchange. The Commission is publishing this notice to solicit comments on the proposed rule change from interested persons.

I. Self-Regulatory Organization's Statement of the Terms of the Substance of the Proposed Rule Change

The Exchange proposes to amend its rules to address how certain stop orders are handled during a Limit State or Straddle State.

The text of the proposed rule change is available on the Exchange's Internet Web site at *http://www.ise.com*, at the principal office of the Exchange, and at the Commission's Public Reference Room.

II. Self-Regulatory Organization's Statement of the Purpose of, and Statutory Basis for, the Proposed Rule Change

In its filing with the Commission, the Exchange included statements concerning the purpose of, and basis for, the proposed rule change and discussed any comments it received on the proposed rule change. The text of these statements may be examined at the places specified in Item IV below. The self-regulatory organization has prepared summaries, set forth in Sections A, B and C below, of the most significant aspects of such statements.

[1] 15 U.S.C. 78s(b)(1).

[2] 17 CFR 240.19b–4.

A. Self-Regulatory Organization's Statement of the Purpose of, and Statutory Basis for, the Proposed Rule Change

1. Purpose

The purpose of this proposed rule change is to amend Exchange rules to address how stop orders are handled during a Limit State[3] or Straddle State.[4] On May 31, 2012, the Commission approved the Plan to Address Extraordinary Market Volatility (the ''Plan''),[5] which establishes procedures to address extraordinary volatility in NMS Stocks. The procedures provide for market-wide limit up-limit down requirements that prevent trades in individual NMS Stocks from occurring outside of specified Price Bands. These limit up-limit down requirements are coupled with Trading Pauses to accommodate more fundamental price moves. The Plan procedures are designed, among other things, to protect investors and promote fair and orderly markets.[6] The Plan has been implemented, as a one year pilot program, in two phases.[7] Phase I of the Plan became effective on April 18, 2013 and applies to Tier I NMS Stocks per Appendix A of the Plan, with Phase II, which would apply to all NMS Stocks, scheduled to become effective six months later.

Topaz is not a participant in the Plan because it does not trade NMS Stocks. However, Topaz trades options contracts overlying NMS Stocks. Because options pricing models are highly dependent on the price of the underlying security and the ability of options traders to effect hedging transactions in the underlying security, the implementation of the Plan impacts the trading of options classes traded on the Exchange.

When the national best bid (offer) for a security underlying an options class is non-executable, the ability for options market participants to purchase (sell) shares of the underlying security and the price at which they may be able to purchase (sell) shares becomes

[3] Limit State means the condition when the national best bid or national best offer for an underlying security equals an applicable price band, as determined by the primary listing exchange for the underlying security. *See* Topaz Rule 703A(a)(2).

[4] Straddle State means the condition when the national best bid or national best offer for an underlying security in non-executable, as determined by the primary listing exchange for the underlying security, but the security is not in a Limit State. *See* Topaz Rule 703A(a)(3).

[5] *See* Securities Exchange Act Release No. 67091 (May 31, 2012), 77 FR 33498 (June 6, 2012) (File No. 4–631) (''Plan Approval Order'').

[6] *Id.*

[7] *Id.*

uncertain, as there is a lack of transparency regarding the availability of liquidity for the security. This uncertainty is factored into the options pricing models of market professionals, such as options market makers, which then results in wider spreads and less liquidity at the best bid and offer for the options class. To address trading during limit up-limit down states, the Exchange has rules that govern the handling of market orders and stop orders.[8] Specifically, the Exchange currently automatically rejects all incoming orders that do not contain a limit price to protect them from being executed at prices that may be vastly inferior to the prices available immediately prior to or following a Limit State or Straddle State.[9] Such un-priced orders include market orders and stop orders, which become market orders when the stop price is elected.[10] The Exchange also currently cancels any unexecuted market orders and unexecuted stop orders.

After discussions with, and at the request of members, the Exchange now proposes to amend the treatment of unexecuted stop orders. Specifically, the Exchange proposes to hold, rather than cancel, all unexecuted stop orders pending in the trading system until the end of a Limit State or Straddle State, at which point the order will become eligible to be elected if the market for the particular option contract has reached the specified contract price. The Exchange believes that it is unduly burdensome for members to have stop orders cancelled back to them without their affirmatively choosing to do so, particularly when these orders have not become eligible to be elected and therefore are not at risk of being executed at inferior prices. The Exchange further believes it is appropriate, in the interests of promoting fair and orderly markets, to hold unexecuted stop orders rather than cancel them, until the end of a Limit State or Straddle State. The Exchange believes that when investors enter a stop order, they have an expectation that the stop order will be traded at the elected price once a Limit State or Straddle State has ended, and that the order will not be cancelled back to them. Investors send stop orders because they do not want to continuously monitor them and expect that the order will execute once the stop price has been reached. The Exchange believes it is onerous for investors to have these orders cancelled back to them when they expect these orders to trade at their stopped price. The Exchange is not proposing any change to how unexecuted market orders are treated and, per Rule 703A(b)(1), these orders will continue to be canceled upon the initiation of a Limit State or Straddle State in the underlying security. The Exchange believes that holding unexecuted market orders until the underlying security comes out of a Limit State or Straddle State could result in these orders being executed at prices drastically different from the time when these orders were first sent to the Exchange for execution. As noted above, orders that do not contain a limit price are at risk of being executed at inferior prices if the Exchange were to hold such orders in the system until the underlying security comes out of a Limit State or Straddle State. Canceling such orders therefore provides investors the opportunity to submit their orders for execution at their expected price.

While the proposed treatment of unexecuted stop orders is a departure from how these orders are currently addressed, the Exchange believes this rule change will promote fair and orderly markets as investors will have greater certainty that these orders will be executed once they become eligible rather than be cancelled. The proposed rule change is also consistent with how such orders are treated on other exchanges.[11]

2. Statutory Basis

The Exchange believes that its proposal is consistent with Section 6(b) of the Securities Exchange Act of 1934 (the ''Act'')[12] in general, and furthers the objectives of Section 6(b)(5) of the Act[13] in particular, in that it is designed to promote just and equitable principles of trade, to remove impediments to and perfect the mechanism for a free and open market and a national market system, and, in general, to protect investors and the public interest.

As discussed above, when an underlying security enters a Limit State or Straddle State, the best bid and offer in the options class is likely to widen considerably, and the liquidity available at those prices may be greatly reduced. Given that a Limit State or a Straddle State may be resolved very quickly, the Exchange believes holding unexecuted stop orders in the trading system until the end of a Limit State or a Straddle State, rather than canceling them, will provide market participants a greater opportunity to have their orders executed when the market for the particular option contract reaches its specified price.

B. Self-Regulatory Organization's Statement on Burden on Competition

The Exchange does not believe that the proposal will impose any burden on competition that is not necessary or appropriate in furtherance of the purposes of the Act. Specifically, the Exchange believes the proposed rule change will not impose any burden on intramarket competition because it will apply to all market makers equally. The Exchange does not believe the proposed rule change will impose any burden on intermarket competition as the proposed change is made for the protection of investors.

C. Self-Regulatory Organization's Statement on Comments on the Proposed Rule Change Received From Members, Participants, or Others

The Exchange has not solicited, and does not intend to solicit, comments on this proposed rule change. The Exchange has not received any unsolicited written comments from members or other interested parties.

III. Date of Effectiveness of the Proposed Rule Change and Timing for Commission Action

The Exchange believes that the foregoing proposed rule change may take effect upon filing with the Commission pursuant to Section19(b)(3)(A)[14] of the Act and Rule 19b–4(f)(6) thereunder[15] because the foregoing proposed rule change does not (i) significantly affect the protection of investors or the public interest, (ii) impose any significant burden on competition, and (iii) become operative for 30 days after its filing date, or such shorter time as the Commission may designate.

At any time within 60 days of the filing of the proposed rule change, the Commission summarily may temporarily suspend such rule change if it appears to the Commission that such action is: (i) Necessary or appropriate in the public interest; (ii) for the protection of investors; or (iii) otherwise in furtherance of the purposes of the Act. If the Commission takes such action, the Commission shall institute proceedings to determine whether the proposed rule should be approved or disapproved.

[8] *See* Topaz Rule 703A(b).

[9] *See* Topaz Rules 703A(b)(1) and (2).

[10] *See* Topaz Rule 715(e).

[11] *See* Chicago Board Options Exchange, Inc. (''CBOE'') Rule 6.53, Interpretation and Policies .01(C).

[12] 15 U.S.C. 78f(b).

[13] 15 U.S.C. 78f(b)(5).

[14] 15 U.S.C. 78s(b)(3)(A).

[15] 17 CFR 240.19b–4(f)(6).

IV. Solicitation of Comments

Interested persons are invited to submit written data, views, and arguments concerning the foregoing, including whether the proposed rule change is consistent with the Act. Comments may be submitted by any of the following methods:

Electronic Comments

- Use the Commission's Internet comment form (*http://www.sec.gov/rules/sro.shtml*); or
- Send an email to *rule-comments@sec.gov.* Please include File Number SR–TOPAZ–2013–11 on the subject line.

Paper Comments

- Send paper comments in triplicate to Elizabeth M. Murphy, Secretary, Securities and Exchange Commission, 100 F Street NE., Washington, DC 20549–1090.

All submissions should refer to File Number SR–TOPAZ–2013–11. This file number should be included on the subject line if email is used. To help the Commission process and review your comments more efficiently, please use only one method. The Commission will post all comments on the Commission's Internet Web site (*http://www.sec.gov/rules/sro.shtml*). Copies of the submission, all subsequent amendments, all written statements with respect to the proposed rule change that are filed with the Commission, and all written communications relating to the proposed rule change between the Commission and any person, other than those that may be withheld from the public in accordance with the provisions of 5 U.S.C. 552, will be available for Web site viewing and printing in the Commission's Public Reference Room, 100 F Street NE., Washington, DC 20549–1090, on official business days between the hours of 10:00 a.m. and 3:00 p.m. Copies of such filing also will be available for inspection and copying at the principal offices of Topaz. All comments received will be posted without change; the Commission does not edit personal identifying information from submissions. You should submit only information that you wish to make available publicly. All submissions should refer to File Number SR–TOPAZ–2013–11, and should be submitted on or before December 12, 2013.

For the Commission, by the Division of Trading and Markets, pursuant to delegated authority.[16]

Kevin M. O'Neill,

Deputy Secretary.

[FR Doc. 2013–27900 Filed 11–20–13; 8:45 am]

BILLING CODE 8011–01–P

[16] 17 CFR 200.30–3(a)(12).

SECURITIES AND EXCHANGE COMMISSION

[Release No. 34–70884; File No. SR–ISE–2013–59]

Self-Regulatory Organizations; International Securities Exchange, LLC; Notice of Filing and Immediate Effectiveness of Proposed Rule Change To Address the Treatment of Certain Stop Orders During a Limit State or Straddle State

November 15, 2013.

Pursuant to Section 19(b)(1) of the Securities Exchange Act of 1934 (the ''Act''),[1] and Rule 19b–4 thereunder,[2] notice is hereby given that on November 7, 2013, the International Securities Exchange, LLC (the ''Exchange'' or the ''ISE'') filed with the Securities and Exchange Commission (''Commission'') the proposed rule change as described in Items I, II, and III below, which items have been prepared by the Exchange. The Commission is publishing this notice to solicit comments on the proposed rule change from interested persons.

I. Self-Regulatory Organization's Statement of the Terms of the Substance of the Proposed Rule Change

The Exchange proposes to amend its rules to address how certain stop orders are handled during a Limit State or Straddle State.

The text of the proposed rule change is available on the Exchange's Internet Web site at *http://www.ise.com,* at the principal office of the Exchange, and at the Commission's Public Reference Room.

II. Self-Regulatory Organization's Statement of the Purpose of, and Statutory Basis for, the Proposed Rule Change

In its filing with the Commission, the Exchange included statements concerning the purpose of, and basis for, the proposed rule change and discussed any comments it received on the proposed rule change. The text of these statements may be examined at the places specified in Item IV below. The self-regulatory organization has prepared summaries, set forth in Sections A, B and C below, of the most significant aspects of such statements.

A. Self-Regulatory Organization's Statement of the Purpose of, and Statutory Basis for, the Proposed Rule Change

1. Purpose

The purpose of this proposed rule change is to amend Exchange rules to address how stop orders are handled during a Limit State[3] or Straddle State.[4] On May 31, 2012, the Commission approved the Plan to Address Extraordinary Market Volatility (the ''Plan''),[5] which establishes procedures to address extraordinary volatility in NMS Stocks. The procedures provide for market-wide limit up-limit down requirements that prevent trades in individual NMS Stocks from occurring outside of specified Price Bands. These limit up-limit down requirements are coupled with Trading Pauses to accommodate more fundamental price moves. The Plan procedures are designed, among other things, to protect investors and promote fair and orderly markets.[6] The Plan has been implemented, as a one year pilot program, in two phases.[7] Phase I of the Plan became effective on April 18, 2013 and applies to Tier I NMS Stocks per Appendix A of the Plan, with Phase II, which would apply to all NMS Stocks, scheduled to become effective six months later.

ISE is not a participant in the Plan because it does not trade NMS Stocks. However, the ISE trades options contracts overlying NMS Stocks. Because options pricing models are highly dependent on the price of the underlying security and the ability of options traders to effect hedging transactions in the underlying security, the implementation of the Plan impacts the trading of options classes traded on the Exchange.

When the national best bid (offer) for a security underlying an options class is

[1] 15 U.S.C. 78s(b)(1).

[2] 17 CFR 240.19b–4.

[3] Limit State means the condition when the national best bid or national best offer for an underlying security equals an applicable price band, as determined by the primary listing exchange for the underlying security. *See* ISE Rule 703A(a)(2).

[4] Straddle State means the condition when the national best bid or national best offer for an underlying security in non-executable, as determined by the primary listing exchange for the underlying security, but the security is not in a Limit State. *See* ISE Rule 703A(a)(3).

[5] *See* Securities Exchange Act Release No. 67091 (May 31, 2012), 77 FR 33498 (June 6, 2012) (File No. 4–631) (''Plan Approval Order'').

[6] *Id.*

[7] *Id.*

non-executable, the ability for options market participants to purchase (sell) shares of the underlying security and the price at which they may be able to purchase (sell) shares becomes uncertain, as there is a lack of transparency regarding the availability of liquidity for the security. This uncertainty is factored into the options pricing models of market professionals, such as options market makers, which then results in wider spreads and less liquidity at the best bid and offer for the options class. To address trading during limit up-limit down states, the Exchange adopted rules to govern the handling of market orders and stop orders.[8] Specifically, the Exchange currently automatically rejects all incoming orders that do not contain a limit price to protect them from being executed at prices that may be vastly inferior to the prices available immediately prior to or following a Limit State or Straddle State.[9] Such un-priced orders include market orders and stop orders, which become market orders when the stop price is elected.[10] The Exchange also currently cancels any unexecuted market orders and unexecuted stop orders.

After discussions with, and at the request of members, the Exchange now proposes to amend the treatment of unexecuted stop orders. Specifically, the Exchange proposes to hold, rather than cancel, all unexecuted stop orders pending in the trading system until the end of a Limit State or Straddle State, at which point the order will become eligible to be elected if the market for the particular option contract has reached the specified contract price. The Exchange believes that it is unduly burdensome for members to have stop orders cancelled back to them without their affirmatively choosing to do so, particularly when these orders have not become eligible to be elected and therefore are not at risk of being executed at inferior prices. The Exchange further believes it is appropriate, in the interests of promoting fair and orderly markets, to hold unexecuted stop orders rather than cancel them, until the end of a Limit State or Straddle State. The Exchange believes that when investors enter a stop order, they have an expectation that the stop order will be traded at the elected price once a Limit State or Straddle State has ended, and that the order will not be cancelled back to them. Investors send stop orders because they do not want to continuously monitor them and expect that the order will execute once the stop price has been reached. The Exchange believes it is onerous for investors to have these orders cancelled back to them when they expect these orders to trade at their stopped price. The Exchange is not proposing any change to how unexecuted market orders are treated and, per Rule 703A(b)(1), these orders will continue to be canceled upon the initiation of a Limit State or Straddle State in the underlying security. The Exchange believes that holding unexecuted market orders until the underlying security comes out of a Limit State or Straddle State could result in these orders being executed at prices drastically different from the time when these orders were first sent to the Exchange for execution. As noted above, orders that do not contain a limit price are at risk of being executed at inferior prices if the Exchange were to hold such orders in the system until the underlying security comes out of a Limit State or Straddle State. Canceling such orders therefore provides investors the opportunity to submit their orders for execution at their expected price.

While the proposed treatment of unexecuted stop orders is a departure from how these orders are currently addressed, the Exchange believes this rule change will promote fair and orderly markets as investors will have greater certainty that these orders will be executed once they become eligible rather than be cancelled. The proposed rule change is also consistent with how such orders are treated on other exchanges.[11]

2. Statutory Basis

The Exchange believes that its proposal is consistent with Section 6(b) of the Securities Exchange Act of 1934 (the ''Act'')[12] in general, and furthers the objectives of Section 6(b)(5) of the Act[13] in particular, in that it is designed to promote just and equitable principles of trade, to remove impediments to and perfect the mechanism for a free and open market and a national market system, and, in general, to protect investors and the public interest.

As discussed above, when an underlying security enters a Limit State or Straddle State, the best bid and offer in the options class is likely to widen considerably, and the liquidity available at those prices may be greatly reduced. Given that a Limit State or a Straddle State may be resolved very quickly, the Exchange believes holding unexecuted stop orders in the trading system until the end of a Limit State or a Straddle State, rather than canceling them, will provide market participants a greater opportunity to have their orders executed when the market for the particular option contract reaches its specified price.

B. Self-Regulatory Organization's Statement on Burden on Competition

The Exchange does not believe that the proposal will impose any burden on competition that is not necessary or appropriate in furtherance of the purposes of the Act. Specifically, the Exchange believes the proposed rule change will not impose any burden on intramarket competition because it will apply to all market makers equally. The Exchange does not believe the proposed rule change will impose any burden on intermarket competition as the proposed change is made for the protection of investors.

C. Self-Regulatory Organization's Statement on Comments on the Proposed Rule Change Received From Members, Participants, or Others

The Exchange has not solicited, and does not intend to solicit, comments on this proposed rule change. The Exchange has not received any unsolicited written comments from members or other interested parties.

III. Date of Effectiveness of the Proposed Rule Change and Timing for Commission Action

The Exchange believes that the foregoing proposed rule change may take effect upon filing with the Commission pursuant to Section19(b)(3)(A)[14] of the Act and Rule 19b–4(f)(6) thereunder[15] because the foregoing proposed rule change does not (i) significantly affect the protection of investors or the public interest, (ii) impose any significant burden on competition, and (iii) become operative for 30 days after its filing date, or such shorter time as the Commission may designate.

At any time within 60 days of the filing of the proposed rule change, the Commission summarily may temporarily suspend such rule change if it appears to the Commission that such action is: (i) Necessary or appropriate in the public interest; (ii) for the protection of investors; or (iii) otherwise in

[8] *See* Securities Exchange Act Release No. 69148 (March 15, 2013), 78 FR 17462 (March 21, 2013 (SR–ISE–2013–20).

[9] *See* ISE Rules 703A(b)(1) and (2).

[10] *See* ISE Rule 715(e).

[11] *See* Chicago Board Options Exchange, Inc. (''CBOE'') Rule 6.53, Interpretation and Policies .01(C).

[12] 15 U.S.C. 78f(b).

[13] 15 U.S.C. 78f(b)(5).

[14] 15 U.S.C. 78s(b)(3)(A).

[15] 17 CFR 240.19b–4(f)(6).

furtherance of the purposes of the Act. If the Commission takes such action, the Commission shall institute proceedings to determine whether the proposed rule should be approved or disapproved.

IV. Solicitation of Comments

Interested persons are invited to submit written data, views, and arguments concerning the foregoing, including whether the proposed rule change is consistent with the Act. Comments may be submitted by any of the following methods:

Electronic Comments

- Use the Commission's Internet comment form (*http://www.sec.gov/rules/sro.shtml*); or
- Send an email to *rule-comments@sec.gov.* Please include File Number SR–ISE–2013–59 on the subject line.

Paper Comments

- Send paper comments in triplicate to Elizabeth M. Murphy, Secretary, Securities and Exchange Commission, 100 F Street NE., Washington, DC 20549–1090.

All submissions should refer to File Number SR–ISE–2013–59. This file number should be included on the subject line if email is used. To help the Commission process and review your comments more efficiently, please use only one method. The Commission will post all comments on the Commission's Internet Web site (*http://www.sec.gov/rules/sro.shtml*). Copies of the submission, all subsequent amendments, all written statements with respect to the proposed rule change that are filed with the Commission, and all written communications relating to the proposed rule change between the Commission and any person, other than those that may be withheld from the public in accordance with the provisions of 5 U.S.C. 552, will be available for Web site viewing and printing in the Commission's Public Reference Room, 100 F Street NE., Washington, DC 20549–1090, on official business days between the hours of 10:00 a.m. and 3:00 p.m. Copies of such filing also will be available for inspection and copying at the principal offices of ISE. All comments received will be posted without change; the Commission does not edit personal identifying information from submissions. You should submit only information that you wish to make available publicly. All submissions should refer to File Number SR–ISE–2013–59, and should be submitted on or before December 12, 2013.

For the Commission, by the Division of Trading and Markets, pursuant to delegated authority.[16]

Kevin M. O'Neill,

Deputy Secretary.

[FR Doc. 2013–27899 Filed 11–20–13; 8:45 am]

BILLING CODE 8011–01–P

[16] 17 CFR 200.30–3(a)(12).

SECURITIES AND EXCHANGE COMMISSION

[File No. 500–1]

Order of Suspension of Trading; In the Matter of HouseRaising, Inc., iElement Corporation, InforMedix Holdings, Inc., Nortia Capital Partners, Inc., and PC Universe, Inc.

November 19, 2013.

It appears to the Securities and Exchange Commission that there is a lack of current and accurate information concerning the securities of HouseRaising, Inc. because it has not filed any periodic reports since the period ended September 30, 2007.

It appears to the Securities and Exchange Commission that there is a lack of current and accurate information concerning the securities of iElement Corporation because it has not filed any periodic reports since the period ended December 31, 2008.

It appears to the Securities and Exchange Commission that there is a lack of current and accurate information concerning the securities of InforMedix Holdings, Inc. because it has not filed any periodic reports since the period ended September 30, 2008.

It appears to the Securities and Exchange Commission that there is a lack of current and accurate information concerning the securities of Nortia Capital Partners, Inc. because it has not filed any periodic reports since the period ended January 31, 2009.

It appears to the Securities and Exchange Commission that there is a lack of current and accurate information concerning the securities of PC Universe, Inc. because it has not filed any periodic reports since the period ended June 30, 2009.

The Commission is of the opinion that the public interest and the protection of investors require a suspension of trading in the securities of the above-listed companies. Therefore, it is ordered, pursuant to Section 12(k) of the Securities Exchange Act of 1934, that trading in the securities of the above-listed companies is suspended for the period from 9:30 a.m. EST on November 19, 2013, through 11:59 p.m. EST on December 3, 2013.

By the Commission.

Elizabeth M. Murphy,

Secretary.

[FR Doc. 2013–28025 Filed 11–19–13; 11:15 am]

BILLING CODE 8011–01–P

SOCIAL SECURITY ADMINISTRATION

[Docket No. SSA 2013–0058]

Privacy Act of 1974, as Amended; Computer Matching Program (SSA/Bureau of the Fiscal Service, Department of the Treasury (Fiscal Service))—Match Number 1038

AGENCY: Social Security Administration (SSA).

ACTION: Notice of a renewal of an existing computer matching program that will expire on December 25, 2013.

SUMMARY: In accordance with the provisions of the Privacy Act, as amended, this notice announces a renewal of an existing computer matching program that we are currently conducting with Fiscal Service.

DATES: We will file a report of the subject matching program with the Committee on Homeland Security and Governmental Affairs of the Senate; the Committee on Oversight and Government Reform of the House of Representatives; and the Office of Information and Regulatory Affairs, Office of Management and Budget (OMB). The matching program will be effective as indicated below.

ADDRESSES: Interested parties may comment on this notice by either telefaxing to (410) 966–0869 or writing to the Executive Director, Office of Privacy and Disclosure, Office of the General Counsel, Social Security Administration, 617 Altmeyer Building, 6401 Security Boulevard, Baltimore, MD 21235–6401. All comments received will be available for public inspection at this address.

FOR FURTHER INFORMATION CONTACT: The Executive Director, Office of Privacy and Disclosure, Office of the General Counsel, as shown above.

SUPPLEMENTARY INFORMATION:

A. General

The Computer Matching and Privacy Protection Act of 1988 (Pub. L. 100–503), amended the Privacy Act (5 U.S.C. 552a) by describing the conditions under which computer matching involving the Federal government could be performed and adding certain protections for persons applying for, and receiving, Federal benefits. Section 7201 of the Omnibus Budget Reconciliation Act of 1990 (Pub. L. 101–

508) further amended the Privacy Act regarding protections for such persons.

The Privacy Act, as amended, regulates the use of computer matching by Federal agencies when records in a system of records are matched with other Federal, State, or local government records. It requires Federal agencies involved in computer matching programs to:

(1) Negotiate written agreements with the other agency or agencies participating in the matching programs;

(2) Obtain approval of the matching agreement by the Data Integrity Boards of the participating Federal agencies;

(3) Publish notice of the computer matching program in the **Federal Register**;

(4) Furnish detailed reports about matching programs to Congress and OMB;

(5) Notify applicants and beneficiaries that their records are subject to matching; and

(6) Verify match findings before reducing, suspending, terminating, or denying a person's benefits or payments.

B. SSA Computer Matches Subject to the Privacy Act

We have taken action to ensure that all of our computer matching programs comply with the requirements of the Privacy Act, as amended.

Kirsten J. Moncada,

Executive Director, Office of Privacy and Disclosure, Office of the General Counsel.

Notice of Computer Matching Program, SSA With the Bureau of the Fiscal Service, Department of the Treasury (Fiscal Service)

A. Participating Agencies

SSA and Fiscal Service.

B. Purpose of the Matching Program

The purpose of this matching program is to establish the conditions, safeguards, and procedures for the disclosure of savings security data (as described in section VI.C and section VI.D) by Fiscal Service to us. Fiscal Service will disclose the data through a computer matching operation. We will use the data to determine continued eligibility for and/or the correct benefit amount for Supplemental Security Income applicants and recipients who did not report or incorrectly reported ownership of savings securities.

C. Authority for Conducting the Matching Program

This computer matching agreement sets forth the responsibilities of SSA and Fiscal Service with respect to information disclosed pursuant to this agreement and is executed under the Privacy Act of 1974, 5 United States Code (U.S.C.) 552a, as amended by the Computer Matching and Privacy Protection Act of 1988, as amended, and the regulations and guidance promulgated thereunder.

The legal authority for SSA to conduct this matching activity is contained in 1631(e)(1)(B), and 1631(f) of the Social Security Act (Act), (42 U.S.C. 1383(e)(1)(B), and 1383(f)).

D. Categories of Records and Persons Covered by the Matching Program

The relevant SSA system of records (SOR) is the Supplemental Security Income Record and Special Veterans Benefits SSA/ODSSIS 60–0103, last published on January 11, 2006 at 71 FR 1830. The relevant Fiscal Service SORs are Treasury/BPD.002, United States Savings Type Securities, and Treasury/BPD.008, Retail Treasury Securities Access Application. These SORs were last published on August 17, 2011 at 76 FR 51128.

E. Inclusive Dates of the Matching Program

The effective date of this matching program is December 26, 2013; provided that the following notice periods have lapsed: 30 days after publication of this notice in the **Federal Register** and 40 days after notice of the matching program is sent to Congress and OMB. The matching program will continue for 18 months from the effective date and, if both agencies meet certain conditions, it may extend for an additional 12 months thereafter.

[FR Doc. 2013–27911 Filed 11–20–13; 8:45 am]

BILLING CODE 4191–02–P

SOCIAL SECURITY ADMINISTRATION

[Docket No. SSA 2013–0059]

Privacy Act of 1974, as Amended; Computer Matching Program (SSA/Centers for Medicare & Medicaid Services (CMS))—Match Number 1076

AGENCY: Social Security Administration (SSA).

ACTION: Notice of a renewal of an existing computer matching program that will expire on October 16, 2013.

SUMMARY: In accordance with the provisions of the Privacy Act, as amended, this notice announces a renewal of an existing computer matching program that we conduct with CMS.

DATES: We will file a report of the subject matching program with the Committee on Homeland Security and Governmental Affairs of the Senate; the Committee on Oversight and Government Reform of the House of Representatives; and the Office of Information and Regulatory Affairs, Office of Management and Budget (OMB). The matching program will be effective as indicated below.

ADDRESSES: Interested parties may comment on this notice by either telefaxing to (410) 966–0869 or writing to the Executive Director, Office of Privacy and Disclosure, Office of the General Counsel, Social Security Administration, 617 Altmeyer Building, 6401 Security Boulevard, Baltimore, MD 21235–6401. All comments received will be available for public inspection at this address.

FOR FURTHER INFORMATION CONTACT: The Executive Director, Office of Privacy and Disclosure, Office of the General Counsel, as shown above.

SUPPLEMENTARY INFORMATION:

A. General

The Computer Matching and Privacy Protection Act of 1988 (Pub. L 100–503), amended the Privacy Act (5 U.S.C. 552a) by describing the conditions under which computer matching involving the Federal government could be performed and adding certain protections for persons applying for, and receiving, Federal benefits. Section 7201 of the Omnibus Budget Reconciliation Act of 1990 (Pub. L. 101–508) further amended the Privacy Act regarding protections for such persons.

The Privacy Act, as amended, regulates the use of computer matching by Federal agencies when records in a system of records are matched with other Federal, State, or local government records. It requires Federal agencies involved in computer matching programs to:

(1) Negotiate written agreements with the other agency or agencies participating in the matching programs;

(2) Obtain approval of the matching agreement by the Data Integrity Boards of the participating Federal agencies;

(3) Publish notice of the computer matching program in the **Federal Register**;

(4) Furnish detailed reports about matching programs to Congress and OMB;

(5) Notify applicants and beneficiaries that their records are subject to matching; and

(6) Verify match findings before reducing, suspending, terminating, or denying a person's benefits or payments.

B. SSA Computer Matches Subject to the Privacy Act

We have taken action to ensure that all of our computer matching programs comply with the requirements of the Privacy Act, as amended.

Kirsten J. Moncada,

Executive Director, Office of Privacy and Disclosure, Office of the General Counsel.

Notice of Computer Matching Program, SSA With the Centers for Medicare & Medicaid Services (CMS)

A. Participating Agencies

SSA and CMS.

B. Purpose of the Matching Program

The purpose of this matching program is to use the information provided by CMS to administer the Supplemental Security Income (SSI) program efficiently and to identify Special Veterans' Benefits (SVB) beneficiaries who are no longer residing outside of the United States.

C. Authority for Conducting the Matching Program

The legal authority for the SSI portion of the matching program is contained in sections 1611(e)(1)(A) and (B) and 1631(f) of the Social Security Act and the authority for the SVB portion of the matching program is contained in sections 1611(e)(1)(A) and (B) and 1631(f) of the Social Security Act.

D. Categories of Records and Persons Covered by the Matching Program

We will provide CMS with a finder file on a monthly basis extracted from our Supplemental Security Income Record and Special Veterans Benefits (SSR/SVB), SSA/ODSSIS 60–0103, with identifying information with respect to recipients of SSI benefits. CMS will match our finder file against the system of records for individuals on the Long Term Care Minimum Data Set (LTC/MDS 09–70–0528) and submit its reply file to us no later than 21 days after receipt of our finder file. The title VIII benefit information is included in the SSI system of records and paid using our SSI automated system.

E. Inclusive Dates of the Matching Program

The effective date of this matching program is 30 days after publication of this notice in the **Federal Register** and 40 days after notice of the matching program is sent to Congress and OMB. The matching program will continue for 18 months from the effective date and, if both agencies meet certain conditions, it may extend for an additional 12 months thereafter.

[FR Doc. 2013–27912 Filed 11–20–13; 8:45 am]

BILLING CODE 4191–02–P

DEPARTMENT OF STATE

[Public Notice 8527]

In the Matter of the Review of the Designation of the Kurdistan Worker's Party (and Other Aliases) as a Foreign Terrorist Organization Pursuant to Section 219 of the Immigration and Nationality Act, as Amended

Based upon a review of the Administrative Record assembled pursuant to Section 219(a)(4)(C) of the Immigration and Nationality Act, as amended (8 U.S.C. 1189(a)(4)(C)) (''INA''), and in consultation with the Attorney General and the Secretary of the Treasury, I conclude that the circumstances that were the basis for the 2008 determination to maintain the designation of the aforementioned organization as a Foreign Terrorist Organization have not changed in such a manner as to warrant revocation of the designation and that the national security of the United States does not warrant a revocation of the designation.

Therefore, I hereby determine that the designation of the aforementioned organization as a Foreign Terrorist Organization, pursuant to Section 219 of the INA (8 U.S.C. 1189), shall be maintained.

This determination shall be published in the **Federal Register**.

Dated: November 13, 2013.

John F. Kerry,

Secretary of State.

[FR Doc. 2013–27974 Filed 11–20–13; 8:45 am]

BILLING CODE 4710–10–P

STATE JUSTICE INSTITUTE

SJI Board of Directors Meeting, Notice

AGENCY: State Justice Institute.

ACTION: Notice of meeting.

SUMMARY: The SJI Board of Directors will be meeting on Monday, December 9, 2013 at 1:00 p.m. The meeting will be held at the 9th Judicial Circuit of Florida in Orlando, Florida. The purpose of this meeting is to consider grant applications for the 1st quarter of FY 2013, and other business. All portions of this meeting are open to the public.

ADDRESSES: 9th Judicial Circuit of Florida, Orange County Court Building, 425 N. Orange Blvd., Judicial Conference Room, 23rd Floor.

FOR FURTHER INFORMATION CONTACT: Jonathan Mattiello, Executive Director, State Justice Institute, 11951 Freedom Drive, Suite 1020, Reston, VA 20190, 571–313–8843, *contact@sji.gov.*

Jonathan D. Mattiello,

Executive Director.

[FR Doc. 2013–27933 Filed 11–20–13; 8:45 am]

BILLING CODE P

DEPARTMENT OF TRANSPORTATION

Federal Aviation Administration

Notice to Manufacturers of Continuous Friction Measurement Equipment (CFME)

AGENCY: Federal Aviation Administration (FAA), US DOT.

ACTION: Notice of Information Request

SUMMARY: Projects funded under the Airport Improvement Program (AIP) must meet the requirements of 49 U.S.C. 50101, Buy American Preferences. The Federal Aviation Administration (FAA) is considering issuing waivers to foreign manufacturers of Continuous Friction Measurement Equipment (CFME) that meet the requirements of FAA Advisory Circular (AC) 150/5320–12C, Measurement, Construction, and Maintenance of Skid-Resistant Airport Pavement Surfaces. This notice requests information from manufacturers of CFME meeting the technical requirements to determine whether a waiver to the Buy American Preferences should be issued.

FOR FURTHER INFORMATION CONTACT: Mr. Carlos N. Fields, Airport Improvement Program, APP 520, Room 619, FAA, 800 Independence Avenue SW., Washington, DC 20591, Telephone (202) 267–8826.

SUPPLEMENTARY INFORMATION: The Federal Aviation Administration (FAA) manages a federal grant program for airports called the Airport Improvement Program (AIP). AIP grant recipients must follow 49 U.S.C. § 50101, Buy American Preferences.

Under 49 U.S.C. 50101(b)(3), the Secretary of Transportation may waive the Buy American Preference requirement if the goods are not produced in a sufficient and reasonably available amount or are not of a satisfactory quality.

The purpose of this notice is to request FAA-approved manufacturers of CFME, both domestic and foreign, that meet the requirements of FAA Advisory Circular 150/5320–12C, Measurement,

Construction, and Maintenance of Skid-Resistant Airport Pavement Surfaces to submit a qualifications statement for the system for which they have received FAA approval. The detailed instructions for submitting the qualifications statement, including forms, may be found on the FAA Web site at: *https://www.faa.gov/airports/aip/buy_american/* at the tab entitled, Continuous Friction Measurement Equipment Request for Qualifications.

The FAA wants to determine if there is sufficient quantity of FAA-approved domestic manufacturers capable of meeting the FAA technical requirements. If the FAA cannot find that there are a sufficient number of USA manufacturers, it will issue a nationwide waiver to the FAA approved foreign manufacturers.

Technical Requirements: The CFME must have FAA approval indicating that the CFME meets the technical requirements listed in FAA Advisory Circular (AC) 150/5320–12C, Measurement, Construction, and Maintenance of Skid-Resistant Airport Pavement Surfaces. FAA approval is indicated by inclusion in Appendix 4 of the AC. After review, the FAA may issue a nationwide waiver to Buy American Preferences for foreign manufacturers or United States manufacturers that do not meet the Buy American Preference requirements. Waivers will not be issued for manufacturers that do not fully meet the technical requirements. This ''nationwide waiver'' allows CFME to be used on AIP projects without having to receive separate project waivers. Having a nationwide waiver allows projects to start quickly without having to wait for the Buy American analysis to be completed for every project, while still assuring the funds used for airport projects under the Act are being directed to U.S. manufacturers.

Items that have been granted a ''nationwide waiver'' can be found on the FAA Web site at: *https://www.faa.gov/airports/aip/buy_american/* at the tab entitled, National Buy American Waivers Issued.

Issued in Washington, DC, November 1, 2013.

Frank J. San Martin,

Manager, Airports Financial Assistance Division.

[FR Doc. 2013–27949 Filed 11–20–13; 8:45 am]

BILLING CODE 4910–13–P

DEPARTMENT OF TRANSPORTATION

Federal Aviation Administration

First Meeting: RTCA Special Committee 228—Minimum Operational Performance Standards for Unmanned Aircraft Systems

AGENCY: Federal Aviation Administration (FAA), U.S. Department of Transportation (DOT).

ACTION: Notice of RTCA Special Committee 228—Minimum Operational Performance Standards for Unmanned Aircraft Systems.

SUMMARY: The FAA is issuing this notice to advise the public of a meeting of RTCA Special Committee 228—Minimum Operational Performance Standards for Unmanned Aircraft Systems.

DATES: The meeting will be held December 5, 2013 from 9:00 a.m. to 5:00 p.m.

ADDRESSES: The meeting will be held at RTCA, 1150 18th Street NW., Suite 910, Washington, DC 20036.

FOR FURTHER INFORMATION CONTACT: The RTCA Secretariat, 1150 18th Street NW., Suite 910, Washington, DC 20036, or by telephone at (202) 330–0662 or (202) 833–9339, fax at (202) 833–9434, or Web site at *http://www.rtca.org.*

SUPPLEMENTARY INFORMATION: Pursuant to section 10(a)(2) of the Federal Advisory Committee Act (Pub. L. 92–463, 5 U.S.C., App.), notice is hereby given for a meeting of RTCA Special Committee 228—Minimum Operational Performance Standards for Unmanned Aircraft Systems. The agenda will include the following:

Specific Working Group Sessions Before Plenary

December 3

All Day, Working Group 1–DAA, MacIntosh-NBAA Room & Colson Board Room. All Day, Working Group 2–C2, ARINC & Hilton-A4A Rooms.

December 4

All Day, Working Group 1–DAA, MacIntosh-NBAA Room & Colson Board Room, 9:00 a.m.–12:00/noon, Working Group 2–C2 will meet at NBAA, 1200 G Street, NW., Suite 1100, Washington, DC, 1:00 p.m.–5:00 p.m., Working Group 2–C2, ARINC & Hilton—A4A Rooms at RTCA.

Thursday, December 5

- Welcome and Introductions.
- Agenda Overview.
- Review/Approval of Minutes from Plenary #2 (RTCA Paper No. 219–13/SC–228–007).
- Review of RTCA SC–228 Steering Committee Activity.
- SSC–228 Terms of Reference—coordination with other SCs
  - Status of Discussions with SC–147.
- Review/Approval—New Document—SC–228 UAS Detect and Avoid (DAA) White Paper, RTCA Paper No. 236–13/SC–228–008.
- Review/Approval—New Document—SC–228 UAS Command and Control (C2) White Paper, RTCA Paper No. 237–13/SC–228–009.
- Briefing—NASA's Activity to Support SC–228.
- Other Business.
- Date and Place of Next Meeting.
- Adjourn.

Attendance is open to the interested public but limited to space availability. With the approval of the chairman, members of the public may present oral statements at the meeting.

Persons wishing to present statements or obtain information should contact the person listed in the **FOR FURTHER INFORMATION CONTACT** section. Members of the public may present a written statement to the committee at any time.

Issued in Washington, DC, on June 6, 2013.

Paige L. Williams,

Management Analyst, Business Operations Group, ANG–A12, Federal Aviation Administration.

[FR Doc. 2013–27853 Filed 11–20–13; 8:45 am]

BILLING CODE 4910–13–P

DEPARTMENT OF TRANSPORTATION

Federal Aviation Administration

35th Meeting: RTCA Special Committee 206, Aeronautical Information and Meteorological Data Link Services

AGENCY: Federal Aviation Administration (FAA), U.S. Department of Transportation (DOT).

ACTION: Meeting Notice of RTCA Special Committee 206, Aeronautical Information and Meteorological Data Link Services.

SUMMARY: The FAA is issuing this notice to advise the public of the thirty-fifth meeting of the RTCA Special Committee 206, Aeronautical Information and Meteorological Data Link Services.

DATES: The meeting will be held December 9–13, 8:30 a.m.–5:00 p.m.

ADDRESSES: The meeting will be held at MITRE, 7515 Colshire Drive, McLean, VA 22102–7539.

FOR FURTHER INFORMATION CONTACT: The RTCA Secretariat, 1150 18th Street NW., Suite 910, Washington, DC 20036, or by telephone at (202) 330–0652/(202) 833–

9339, fax at (202) 833–9434, or Web site at *http://www.rtca.org.*

SUPPLEMENTARY INFORMATION: Pursuant to section 10(a) (2) of the Federal Advisory Committee Act (Pub. L. 92–463, 5 U.S.C., App.), notice is hereby given for a meeting of Special Committee 206. The agenda will include the following:

December 09

- Introduction and opening remarks
- Review and approve meeting agenda
- Approval of previous meeting minutes
- SC–206 Action item review
- Approval of previous (Chicago) meeting minutes
- Sub-Groups status and week's plan
- Industry Presentations

10 December

- Sub-Groups meetings
- SG4: SE2020 Eddy Dissipation Rate (EDR) Turbulence Project
- Plenary—SG3 Architecture Document FRAC Resolution

11 December

- Plenary—SG3 Architecture Document FRAC Resolution
- Sub-Group Meetings

12 December

- Plenary—SG3 Architecture Document FRAC Resolution
- Sub-Group Meetings

13 December

- Closing—Plenary
- Sub-Groups reports
- Action Item review
- Future meeting plans and dates
- Industry Coordination & Presentations
- Other business
- Adjourn

Attendance is open to the interested public but limited to space availability. With the approval of the chairman, members of the public may present oral statements at the meeting.

Persons wishing to present statements or obtain information should contact the person listed in the **FOR FURTHER INFORMATION CONTACT** section. Members of the public may present a written statement to the committee at any time.

Issued in Washington, DC, on November 14, 2013.

Paige Williams,

Management Analyst, NextGen, Business Operations Group, Federal Aviation Administration.

[FR Doc. 2013–27864 Filed 11–20–13; 8:45 am]

BILLING CODE 4910–13–P

DEPARTMENT OF TRANSPORTATION

Federal Aviation Administration

Fifty-Ninth Meeting: RTCA Special Committee 186, Automatic Dependent Surveillance-Broadcast (ADS–B)

AGENCY: Federal Aviation Administration (FAA), U.S. Department of Transportation (DOT).

ACTION: Meeting Notice of RTCA Special Committee 186, Automatic Dependent Surveillance-Broadcast (ADS–B).

SUMMARY: The FAA is issuing this notice to advise the public of the fifty ninth meeting of the RTCA Special Committee 186, Automatic Dependent Surveillance-Broadcast (ADS–B)

DATES: The meeting will be held December 9–13, from 9:00 a.m.—5:00 p.m.

ADDRESSES: The meeting will be held at the RTCA Headquarters, 1150 18th Street NW., Suite 910, Washington, DC 20036.

FOR FURTHER INFORMATION CONTACT: The RTCA Secretariat, 1150 18th Street NW., Suite 910, Washington, DC 20036, or by telephone at (202) 330–0662/(202) 833–9339, fax (202) 833–9434, or Web site at *http://www.rtca.org.*

SUPPLEMENTARY INFORMATION: Pursuant to section 10(a)(2) of the Federal Advisory Committee Act (Pub. L. 92–463, 5 U.S.C., App.), notice is hereby given for a meeting of Special Committee 186. The agenda will include the following:

December 9

- All Day, WG–4/EUROCAE SubGroup 3—Application Technical. Requirements, MacIntosh-NBAA Room & Colson Board Room

December 10

- All Day, WG–4/EUROCAE SubGroup 3—Application Technical. Requirements, MacIntosh-NBAA Room & Colson Board Room.

December 11

- All Day, WG–4/EUROCAE SubGroup 3—Application Technical. Requirements, MacIntosh-NBAA Room & Colson Board Room

December 12

- All Day, WG–4/EUROCAE SubGroup 3—Application Technical. Requirements, MacIntosh-NBAA Room & Colson Board Room.

December 13

- Chairman's Introductory Remarks Working Group Reports
- Review of Meeting Agenda
- Review/Approval of the Fifty-Eighth Meeting Summary, RTCA Paper No. 078–13/SC186–325.
- FAA Surveillance and Broadcast Services (SBS) Program—Status.
- EUROCAE WG–51 Report
- Review/Approval—New Document—Safety, Performance and Interoperability Requirements Document for Traffic Situation Awareness with Alerts (TSAA), RTCA Paper No. 242–13/SC186–326.
- Review/Approval—Revised DO–317A—Minimum Operational Performance Standards (MOPS) for Aircraft Surveillance Applications (ASA) System, RTCA Paper No. 246–12/SC186–327.
- ADS–B IM Coordination with SC–214/WG–78 for Data Link Rqts–Discussion–Status.
- Working Group Reports
  - WG–4—Application Technical Requirements
    - Flight Deck-based Interval Management (FIM) MOPS Status & Schedule
    - Cockpit Assisited Pilot Prpocedures (CAPP)
- Terms of Reference—proposed changes and discussion
- Date, Place and Time of Next Meeting
- New Business.
- Other Business.
- Review Action Items/Work Programs.
- Adjourn Plenary

Attendance is open to the interested public but limited to space availability. With the approval of the chairman, members of the public may present oral statements at the meeting. Persons wishing to present statements or obtain information should contact the person listed in the **FOR FURTHER INFORMATION CONTACT** section. Members of the public may present a written statement to the committee at any time.

Issued in Washington, DC, on November 14, 2013.

Paige Williams,

Management Analyst, Business Operations Group, NextGen, Management Services, Federal Aviation Administration.

[FR Doc. 2013–27862 Filed 11–20–13; 8:45 am]

BILLING CODE 4910–13–P

DEPARTMENT OF TRANSPORTATION

Federal Aviation Administration

[Summary Notice No. PE–2013–54]

Petition for Exemption; Summary of Petition Received

AGENCY: Federal Aviation Administration (FAA), DOT.

ACTION: Notice of petition for exemption received.

SUMMARY: This notice contains a summary of a petition seeking relief from specified requirements of 14 CFR. The purpose of this notice is to improve the public's awareness of, and participation in, this aspect of FAA's regulatory activities. Neither publication of this notice nor the inclusion or omission of information in the summary is intended to affect the legal status of the petition or its final disposition.

DATE: Comments on this petition must identify the petition docket number and must be received on or before December 11, 2013.

ADDRESSES: You may send comments identified by Docket Number FAA–2013–0769 using any of the following methods:

- *Government-wide rulemaking Web site:* Go to *http://www.regulations.gov* and follow the instructions for sending your comments electronically.
- *Mail:* Send comments to the Docket Management Facility; U.S. Department of Transportation, 1200 New Jersey Avenue SE., West Building Ground Floor, Room W12–140, Washington, DC 20590.
- *Fax:* Fax comments to the Docket Management Facility at 202–493–2251.
- *Hand Delivery:* Bring comments to the Docket Management Facility in Room W12–140 of the West Building Ground Floor at 1200 New Jersey Avenue SE., Washington, DC, between 9 a.m. and 5 p.m., Monday through Friday, except Federal holidays.

Privacy: We will post all comments we receive, without change, to *http://www.regulations.gov*, including any personal information you provide. Using the search function of our docket Web site, anyone can find and read the comments received into any of our dockets, including the name of the individual sending the comment (or signing the comment for an association, business, labor union, etc.). You may review DOT's complete Privacy Act Statement in the **Federal Register** published on April 11, 2000 (65 FR 19477–78).

Docket: To read background documents or comments received, go to *http://www.regulations.gov* at any time or to the Docket Management Facility in Room W12–140 of the West Building Ground Floor at 1200 New Jersey Avenue SE., Washington, DC, between 9 a.m. and 5 p.m., Monday through Friday, except Federal holidays.

FOR FURTHER INFORMATION CONTACT: Katherine L. Haley, ARM–203, Federal Aviation Administration, Office of Rulemaking, 800 Independence Ave SW., Washington, DC 20591; email *Katherine.L.Haley@faa.gov*; (202) 493–5708.

This notice is published pursuant to 14 CFR 11.85.

Issued in Washington, DC, on November 15, 2013.

Lirio Liu,

Director, Office of Rulemaking.

Petition for Exemption

Docket No.: FAA–2013–0769.

Petitioner: Purdue University's Department of Aviation Technology.

Section of 14 CFR Affected: § 61.160(b)(3)(i) and (ii).

Description of Relief Sought: Petitioner seeks relief to allow a manual approach to a controlled tower (MATCH) to be substituted for the precision approaches required by the airline transport pilot (ATP) practical test standards (PTS).

[FR Doc. 2013–27865 Filed 11–20–13; 8:45 am]

BILLING CODE 4910–13–P

DEPARTMENT OF TRANSPORTATION

Federal Aviation Administration

[Summary Notice No. PE–2013–56]

Petition for Exemption; Summary of Petition Received

AGENCY: Federal Aviation Administration (FAA), DOT.

ACTION: Notice of petition for exemption received.

SUMMARY: This notice contains a summary of a petition seeking relief from specified requirements of 14 CFR. The purpose of this notice is to improve the public's awareness of, and participation in, this aspect of the FAA's regulatory activities. Neither publication of this notice nor the inclusion or omission of information in the summary is intended to affect the legal status of the petition or its final disposition.

DATE: Comments on this petition must identify the petition docket number involved and must be received on or before December 11, 2013.

ADDRESSES: You may send comments identified by Docket Number FAA–2013–0325 using any of the following methods:

- Government-wide rulemaking Web site: Go to *http://www.regulations.gov* and follow the instructions for sending your comments electronically.
- Mail: Send comments to the Docket Management Facility; U.S. Department of Transportation, 1200 New Jersey Avenue SE., West Building Ground Floor, Room W12–140, Washington, DC 20590.
- Fax: Fax comments to the Docket Management Facility at 202–493–2251.
- Hand Delivery: Bring comments to the Docket Management Facility in Room W12–140 of the West Building Ground Floor at 1200 New Jersey Avenue SE., Washington, DC, between 9 a.m. and 5 p.m., Monday through Friday, except Federal holidays.

Privacy: We will post all comments we receive, without change, to *http://www.regulations.gov,* including any personal information you provide. Using the search function of our docket Web site, anyone can find and read the comments received into any of our dockets, including the name of the individual sending the comment (or signing the comment for an association, business, labor union, etc.). You may review DOT's complete Privacy Act Statement in the **Federal Register** published on April 11, 2000 (65 FR 19477–78).

Docket: To read background documents or comments received, go to *http://www.regulations.gov* at any time or to the Docket Management Facility in Room W12–140 of the West Building Ground Floor at 1200 New Jersey Avenue SE., Washington, DC, between 9 a.m. and 5 p.m., Monday through Friday, except Federal holidays.

FOR FURTHER INFORMATION CONTACT: Katherine L. Haley, ARM–203, Federal Aviation Administration, Office of Rulemaking, 800 Independence Ave. SW., Washington, DC 20591; email *Katherine.L.Haley@faa.gov;* (202) 493–5708.

This notice is published pursuant to 14 CFR 11.85.

Issued in Washington, DC, on November 15, 2013.

Lirio Liu,

Director, Office of Rulemaking.

Petition for Exemption

Docket No.: FAA–2013–0325.

Petitioner: United States Coast Guard Air Station Sitka, Alaska.

Section of 14 CFR Affected: 14 CFR 61.157.

Description of Relief Sought: Petitioner seeks relief to allow a Manual Approach to a Controlled Hover (MATCH) to be substituted for the precision approaches required by the Airline Transport Pilot (ATP) practical test standards (PTS).

[FR Doc. 2013–27866 Filed 11–20–13; 8:45 am]

BILLING CODE 4910–13–P

DEPARTMENT OF TRANSPORTATION

National Highway Traffic Safety Administration

[Docket No. NHTSA–2012–0004; Notice 2]

Ford Motor Company, Grant of Petition for Decision of Inconsequential Noncompliance

AGENCY: National Highway Traffic Safety Administration (NHTSA), Department of Transportation (DOT).

ACTION: Grant of Petition.

SUMMARY: Ford Motor Company [1] (Ford), has determined that certain model year 2012 Ford Focus model passenger cars manufactured between May 12, 2011 and May 18, 2011, do not fully comply with the requirements of S5.2.1 of Federal Motor Vehicle Safety Standard (FMVSS) No. 101, *Controls and Displays* and the requirements of S5.5.5 of FMVSS No. 135, *Light Vehicle Brake Systems*. Ford has filed an appropriate report pursuant to 49 CFR Part 573, *Defect and Noncompliance Responsibility and Reports,* dated July 7, 2011.

Pursuant to 49 U.S.C. 30118(d) and 30120(h) and the rule implementing those provisions at 49 CFR part 556, Ford has petitioned for an exemption from the notification and remedy requirements of 49 U.S.C. Chapter 301 on the basis that this noncompliance is inconsequential to motor vehicle safety.

Notice of receipt of Ford's petition was published, with a 30-day public comment period, on February 2, 2012 in the **Federal Register** (77 FR 5302). No comments were received. To view the petition, and all supporting documents log onto the Federal Docket Management System (FDMS) Web site at: *http://www.regulations.gov/.* Then follow the online search instructions to locate docket number ''NHTSA–2012–0004.''

Contact Information: For further information on this decision contact Mr. Stuart Seigel, Office of Vehicle Safety Compliance, the National Highway Traffic Safety Administration (NHTSA), telephone (202) 366–5287, facsimile (202) 366–7002.

Vehicles Involved: Affected are approximately 485 model year 2012 Ford Focus passenger cars that were manufactured at Ford's Michigan Assembly Plant between May 12, 2011 and May 18, 2012.

Summary of Ford's Analyses: Ford explains that the affected vehicles display a red International Standards Organization (ISO) symbol for the brake telltale and warning indicator within the instrument cluster instead of the word ''BRAKE'' as required in FMVSS No. 101 and FMVSS No. 135.

Ford stated its belief that although the instrument cluster telltale symbols are displayed using ISO symbols the noncompliance is inconsequential to motor vehicle safety for the following reasons:

(1) The Owners Guide for the subject vehicles is written for multiple markets and depicts both the ''BRAKE'' and ISO symbol telltales for brake warning conditions.

(2) Paragraph S5.5.1 of FMVSS No. 135 states that the warning indicator must identify a gross loss of fluid or fluid pressure and identify if the parking brake is applied and is satisfied by a separate ABS lamp which complies with all requirements of FMVSS No. 135 and FMVSS No. 101.

(3) In the event that the brake fluid level in the master cylinder reservoir is less than the recommended safe level, the ISO symbol will illuminate and a warning message will display in the Message Center that states ''BRAKE FLUID LEVEL LOW SERVICE NOW'' and an initial warning chime will sound. The message will stay continuously displayed until acknowledged by the operator, provided there are no other serious message(s), which would result in the messages alternating. If the brake fluid is still low on subsequent key cycles the message will be redisplayed in the message center. If the message is acknowledged by the operator a red ''i'' is illuminated on the instrument cluster noting that an important message is stored and can be re-accessed by requesting a System Check.

(4) The parking brake in the subject vehicle is set by pulling up on the parking brake handle, which is located on the center console adjacent to the gear shift lever. Thus the application of the parking brake is in full view of the operator. When the parking brake is engaged it illuminates the ISO symbol and should the operator proceed with the parking brake engaged, a warning message ''PARK BRAKE APPLIED'' and an initial audible chime will sound when the vehicle is driven at six miles per hour or greater for more than five seconds, in addition to the vehicle feedback of a lack of acceleration. The warning message will time out after ten seconds but a red ''i'' remains illuminated noting that an important message is stored and can be re-accessed by requesting a System Check. If the operator continues to drive with the parking brake engaged, after 30 seconds the warning message ''PARK BRAKE APPLIED'' will return, along with a warning chime.

(5) In all cases the ISO symbol for the brake telltale illuminates and remains illuminated in accordance with the requirements of FMVSS No. 135.

(6) Ford is unaware of any field or owner complaints regarding the issue of non-compliant telltales.

In summation, Ford believes that the described noncompliance of its vehicles is inconsequential to motor vehicle safety, and that its petition, to exempt it from providing recall notification of noncompliance as required by 49 U.S.C. 30118 and remedying the recall noncompliance as required by 49 U.*S.C. 30120 should be granted.*

Requirement Background: FMVSS No. 101 S5.2.1 and S5.5.2 specifically state:

> S5.2.1 Except for the Low Tire Pressure Telltale, each control, telltale and indicator that is listed in column 1 of Table 1 or Table 2 must be identified by the symbol specified for it in column 2 or the word or abbreviation specified for it in column 3 of Table 1 or Table 2. If a symbol is used, each symbol provided pursuant to this paragraph must be substantially similar in form to the symbol as it appears in Table 1 or Table 2. If a symbol is used, each symbol provided pursuant to this paragraph must have the proportional dimensional characteristics of the symbol as it appears in Table 1 or Table . . .
>
> S5.5.2 The telltales for any brake system malfunction required by Table 1 to be red, air bag malfunction, low tire pressure, electronic stability control malfunction (as of September 1, 2011), passenger air bag off, high beam, turn signal, and seat belt must not be shown in the same common space.

Additionally, Table 1 Note 9 states:

> Refer to FMVSS 105 of FMVSS 135, as appropriate, for additional specific requirements for brake telltale labeling and color. If a single telltale is to be used to indicate more than one brake system condition, the brake system malfunction identifier must be used.

FMVSS No. 135 S5.5.5 specifically states:

> (a) Each visual indicator shall display a word or words in accordance with the requirements of Standard No. 101 (49 CFR 571.101) and this section, which shall be legible to the driver under all daytime and nighttime conditions when activated. Unless otherwise specified, the words shall have letters not less than 3.2 mm (⅛ inch) high and the letters and background shall be of contrasting colors, one of which is red. Words or symbols in addition to those required by Standard No. 101 and this section may be provided for purposes of clarity.
>
> (b) Vehicles manufactured with a split service brake system may use a common brake warning indicator to indicate two or more of the functions described in S5.5.1(a)

[1] Ford Motor Company is a motor vehicle manufacturer incorporated under the laws of the state of Delaware.

through S5.5.1(g). If a common indicator is used, it shall display the word ''Brake'' (emphasis added).

NHTSA Analysis and Reasoning: Ford stated that there are two conditions which will cause the brake system warning indicator, located on the instrument cluster and labeled with an ISO symbol instead of BRAKE, to illuminate:

1. The brake fluid level in the master cylinder reservoir is less than the recommended safe level; and
2. The parking brake control, a handle located on the center console, is applied.

Ford also stated that each warning to the driver includes an audible chime and a warning message in the vehicle's message center. The message ''brake fluid low service now'' would remain illuminated until brake fluid is added. However, that message may alternate with other serious message(s) should they appear. If the vehicle's parking brake is applied, an audible chime will sound when the vehicle reaches 6 mph for more than 5 seconds. The message ''park brake applied'' will time out after 10 seconds, but it will be stored in the message information center for subsequent retrieval by the driver. In addition, the parking brake control is readily visible to the driver and the vehicle will lack acceleration if the parking brake is applied. For either or both conditions 1 and 2, the red brake system warning indicator labeled with the ISO symbol will remain illuminated until the problem is corrected.

We believe that the combination of the red color of the ISO symbol, the audible chimes, message center warnings, and additionally for the parking brake, the position of the applied lever and reduced drivability, all described in the owner's manual, will be sufficient to adequately warn the driver should these serious problems in the braking system occur, even in the absence of the required BRAKE label on the indicator. The manufacturer has shown that the discrepancy with the safety requirement is unlikely to lead to any misunderstanding especially since other sources of correct information beyond the ISO symbol are available. We also believe the ISO symbol has over time evolved to become more recognizable and understandable to drivers. In addition, NHTSA has not received any consumer complaints regarding the subject vehicles.

NHTSA Decision: In consideration of the foregoing, NHTSA has determined that Ford has met its burden of persuasion that the FMVSS No. 101 and 135 noncompliance for the BRAKE telltale is inconsequential to motor vehicle safety. Accordingly, Ford's petition is hereby granted.

NHTSA notes that the statutory provisions (49 U.S.C. 30118(d) and 30120(h)) that permit manufacturers to file petitions for a determination of inconsequentiality allow NHTSA to exempt manufacturers only from the duties found in sections 30118 and 30120, respectively, to notify owners, purchasers, and dealers of a defect or noncompliance and to remedy the defect or noncompliance. Therefore, this decision only applies to the 485 vehicles that Ford no longer controlled at the time that it determined that a noncompliance existed in the subject vehicles. However, the granting of this petition does not relieve vehicle distributors and dealers of the prohibitions on the sale, offer for sale, or introduction or delivery for introduction into interstate commerce of the noncompliant vehicles under their control after Ford notified them that the subject noncompliance existed.

Authority: 49 U.S.C. 30118, 30120: delegations of authority at CFR 1.95 and 501.8.

Issued on: November 18, 2013.

Claude H. Harris,

Director, Office of Vehicle Safety Compliance.

[FR Doc. 2013–27950 Filed 11–20–13; 8:45 am]

BILLING CODE 4910–59–P

DEPARTMENT OF TRANSPORTATION

Surface Transportation Board

[Docket No. MCF 21056]

Tedesco Family ESB Trust, et al.—Purchase of Certain Assets and Membership Interests—Evergreen Interests—Evergreen Trails, Inc. d/b/a Horizon Coach Lines, et al.

AGENCY: Surface Transportation Board, DOT.

ACTION: Notice tentatively authorizing finance transaction.

SUMMARY: On October 22, 2013, the Tedesco Family ESB Trust (Family Trust), on behalf of Franmar Leasing, Inc. (Franmar), together with the Francis Tedesco Revocable Trust and the Mark Tedesco Revocable Trust (collectively, Applicants), all noncarriers, filed an application under 49 U.S.C. 14303 for approval of two companion transactions. The first transaction involves Franmar's purchase of certain motor coach and non-motor coach assets of Evergreen Trails, Inc. d/b/a Horizon Coach Lines (Evergreen) from three garage and terminal facility locations in Florida. The second transaction involves the purchase by the Francis Tedesco Revocable Trust and the Mark Tedesco Revocable Trust of FSCS Corporation's (FSCS) membership interest in Cabana Coaches, LLC (Cabana). The Board is tentatively approving and authorizing the transactions, and, if no opposing comments are timely filed, this notice will be the final Board action. Persons wishing to oppose the application must follow the rules set forth at 49 CFR 1182.5 and 1182.8.

DATES: Comments must be filed by January 6, 2014. Applicants may file a reply by January 21, 2014. If no comments are filed by January 6, 2014, the notice shall be effective on January 7, 2014.

ADDRESSES: Send an original and 10 copies of any comments referring to Docket No. MCF 21056 to: Surface Transportation Board, 395 E Street SW., Washington, DC 20423–0001. In addition, send one copy of comments to Applicants' representative: Fritz R. Kahn, 1919 M Street NW., 7th Floor, Washington, DC 20036.

FOR FURTHER INFORMATION CONTACT: Jonathon Binet, (202) 245–0368. [Federal Information Relay Service (FIRS) for the hearing impaired: 1–800–877–8339.]

SUPPLEMENTARY INFORMATION: Family Trust owns and controls three motor carriers of passengers, Academy Express, L.L.C. (MC–413682), Academy Lines, L.L.C. (MC–41016), and Number 22 Hillside, L.L.C. (MC–413631) (collectively, Academy Companies), through Academy Bus, L.L.C., a noncarrier. Francis Tedesco is the sole manager of the individual Academy Companies. According to Applicants, Academy Lines, L.L.C. and Number 22 Hillside, L.L.C. are leading commuter regular route transportation companies operating in the New York metropolitan area and in New Jersey, respectively. Academy Express, L.L.C. operates primarily in the Northeast.

Family Trust also owns and controls Franmar through two noncarriers, Franmar Logistics, Inc. and Academy Services, Inc. Franmar is primarily engaged in the purchase and leasing of motor coaches to the Academy Companies. The persons who own and control the Academy Companies are the trustees of the Francis Tedesco Revocable Trust (Francis Tedesco, sole trustee) and the Mark Tedesco Revocable Trust (Mark Tedesco, sole trustee), noncarriers, through Family Trust.[1]

[1] Francis Tedesco and Mark Tedesco are the settlors of Family Trust.

Francis W. Sherman owns and controls Cabana (MC–646780) through FSCS. Evergreen, a charter bus operator, (MC–107638) is under the common control of Francis W. Sherman through TMS West Coast, Inc., a noncarrier, and operates in California, Maryland, and Florida, among other states. Cabana is a charter bus operator in Florida, serving Florida ports (including Port Everglades) and Florida airports (including Fort Lauderdale-Hollywood International Airport).

Applicants propose that Franmar will purchase certain motor coach and non-motor coach business assets of Evergreen from three garage and terminal facilities located in Jacksonville, Fla., West Palm Beach, Fla., and Miami, Fla., respectively. Applicants also propose a separate transaction in which the Francis Tedesco Revocable Trust and the Mark Tedesco Revocable Trust purchase 100 percent of FSCS's limited liability membership interest in Cabana. If this transaction is approved, Francis Tedesco, who is the current manager of the Academy Companies, will become the sole manager of Cabana. This transaction will, according to Applicants, permit Cabana to continue passenger transportation services in Florida.

Under 49 U.S.C. 14303(b), the Board must approve and authorize a transaction that it finds consistent with the public interest, taking into consideration at least: (1) The effect of the proposed transaction on the adequacy of transportation to the public; (2) the total fixed charges that result; and (3) the interest of affected carrier employees. Applicants have submitted information, as required by 49 CFR 1182.2, including the information to demonstrate that the proposed transactions are consistent with the public interest under 49 U.S.C. 14303(b), and a statement that the combined 12-month aggregate gross operating revenues of the motor carriers of passengers directly or indirectly owned and controlled by Francis W. Sherman, and those directly or indirectly owned and controlled by Applicants, exceeded $2 million. *See* 49 U.S.C. 14303(g).

Applicants assert that the proposed transactions are in the public interest because Evergreen will be selling vehicles it no longer desires to operate and the public will lose no service as a result of the Franmar-Evergreen transaction because the same number of buses will continue to operate. Applicants also assert that Francis Tedesco is a ''recognized leader in the motorbus industry'' [2] and will be able to procure equipment and fuel at lower prices thereby allowing Academy Companies to maintain a high level of service while lowering rates on charter bus operations to and from Port Everglades and Florida ports and Florida airports. Applicants further state that the proposed transactions would have no effect on total fixed charges and no effect on the quality of the human environment and the conservation of energy resources. Finally, Applicants state that the transaction would have no adverse effect on Evergreen and Cabana's employees as Cabana will retain its employees and will interview and offer employment to Evergreen employees.

On the basis of the application, the Board finds that the proposed transactions are consistent with the public interest and should be tentatively approved and authorized. If any opposing comments are timely filed, these findings will be deemed vacated, and, unless a final decision can be made on the record as developed, a procedural schedule will be adopted to reconsider the application. *See* 49 CFR 1182.6(c). If no opposing comments are filed by the expiration of the comment period, this notice will take effect automatically and will be the final Board action.

The application and Board decisions and notices are available on our Web site at *WWW.STB.DOT.GOV*.

This decision will not significantly affect either the quality of the human environment or the conservation of energy resources.

It is ordered:

1. The proposed transactions are approved and authorized, subject to the filing of opposing comments.

2. If opposing comments are timely filed, the findings made in this notice will be deemed vacated.

3. This notice will be effective on January 7, 2014, unless opposing comments are filed by January 6, 2014.

4. A copy of this decision will be served on: (1) The U.S. Department of Transportation, Federal Motor Carrier Safety Administration, 1200 New Jersey Avenue SE., Washington, DC 20590; (2) the U.S. Department of Justice, Antitrust Division, 10th Street & Pennsylvania Avenue NW., Washington, DC 20530; and (3) the U.S. Department of Transportation, Office of the General Counsel, 1200 New Jersey Avenue SE., Washington, DC 20590.

Decided: November 18, 2013.

[2] *Id.* at 7.

By the Board, Chairman Elliott, Vice Chairman Begeman, and Commissioner Mulvey.

Jeffrey Herzig,

Clearance Clerk.

[FR Doc. 2013–27960 Filed 11–20–13; 8:45 am]

BILLING CODE 4915–01–P

DEPARTMENT OF THE TREASURY

Submission for OMB Review; Comment Request

November 18, 2013.

The Department of the Treasury will submit the following information collection requests to the Office of Management and Budget (OMB) for review and clearance in accordance with the Paperwork Reduction Act of 1995, Public Law 104–13, on or after the date of publication of this notice.

DATES: Comments should be received on or before December 23, 2013 to be assured of consideration.

ADDRESSES: Send comments regarding the burden estimate, or any other aspect of the information collection, including suggestion for reducing the burden, to (1) Office of Information and Regulatory Affairs, Office of Management and Budget, Attention: Desk Officer for Treasury, New Executive Office Building, Room 10235, Washington, DC 20503, or email at *OIRA_Submission@OMB.EOP.GOV* and (2) Treasury PRA Clearance Officer, 1750 Pennsylvania Ave. NW., Suite 8140, Washington, DC 20220, or email at *PRA@treasury.gov*.

FOR FURTHER INFORMATION CONTACT: Copies of the submission(s) may be obtained by calling (202) 927–5331, email at *PRA@treasury.gov,* or the entire information collection request maybe found at *www.reginfo.gov*.

Office of Financial Stability (OFS)

OMB Number: 1505–0209.

Type of Review: Revision of a currently approved collection.

Title: Troubled Asset Relief Program—Conflicts of Interest.

Abstract: Authorized under the Emergency Economic Stabilization Act (EESA) of 2008 (Pub. L. 110–343), as amended by the American Recovery and Reinvestment Act (ARRA) of 2009, the Department of the Treasury has implemented aspects of the Troubled Asset Relief Program (TARP) by codifying section 108 of EESA. Title 31 CFR part 31, TARP Conflict of Interest, sets forth the process for reviewing and addressing actual or potential conflicts of interest among any individuals or entities seeking or having a contract or financial agency agreement with the

Treasury for services under EESA. The information collection required by this part will be used to evaluate and minimize real and apparent conflicts of interest related to contractual or financial agent agreement services performed under TARP.

Affected public: Private Sector: Businesses or other for-profits.

Estimated Annual Burden Hours: 1,292.

OMB Number: 1505–0219.

Type of Review: Revision of a currently approved collection.

Title: TARP Capital Purchase Program—Executive Compensation.

Abstract: Authorized under the Emergency Economic Stabilization Act of 2008 (EESA), Public Law 110–343, as amended by the American Recovery and Reinvestment Act of 2009 (ARRA), Public Law 111–5, the Department of the Treasury established the Troubled Asset Relief Program (TARP) to purchase, and to make and fund commitments to purchase, troubled assets from any financial institution on such terms and conditions determined by the Secretary. Section 111 of EESA, as amended by ARRA, provides that certain entities receiving financial assistance from Treasury under TARP will be subject to specified executive compensation and corporate governance standards established by the Secretary. These standards were set forth in the interim final rule published on June 15, 2009 (74 FR 28394), as corrected on December 7, 2009 (74 FR 63990) (the Interim Final Rule). The standards implemented in the Interim Final Rule require that TARP recipients submit certain information pertaining to their executive compensation and corporate governance practices.

Affected public: Private sector: Businesses or other for-profits.

Estimated Annual Burden Hours: 6,951.

Dawn D. Wolfgang,

Treasury PRA Clearance Officer.

[FR Doc. 2013–27961 Filed 11–20–13; 8:45 am]

BILLING CODE 4810–25–P

DEPARTMENT OF THE TREASURY

Office of the Comptroller of the Currency

Agency Information Collection Activities: Information Collection Renewal; Submission for OMB Review; Lending Limits

AGENCY: Office of the Comptroller of the Currency (OCC), Treasury.

ACTION: Notice and request for comment.

SUMMARY: The OCC, as part of its continuing effort to reduce paperwork and respondent burden, invites the public and other Federal agencies to comment on the renewal of an information collection, as required by the Paperwork Reduction Act of 1995 (PRA). In accordance with the requirements of the PRA, the OCC may not conduct or sponsor, and the respondent is not required to respond to, an information collection unless it displays a currently valid Office of Management and Budget (OMB) control number.

The OCC is soliciting comment concerning renewal of its information collection titled, ''Lending Limits.'' The OCC is also giving notice that it has submitted the collection to OMB for review.

DATES: Comments must be submitted on or before December 23, 2013.

ADDRESSES: Because paper mail in the Washington, DC area and at the OCC is subject to delay, commenters are encouraged to submit comments by email if possible. Comments may be sent to: Legislative and Regulatory Activities Division, Office of the Comptroller of the Currency, Attention: 1557–0317, 400 7th Street SW., Suite 3E–218, Mail Stop 9W–11, Washington, DC 20219. In addition, comments may be sent by fax to (571) 465–4326 or by electronic mail to *regs.comments@occ.treas.gov.* You may personally inspect and photocopy comments at the OCC, 400 7th Street SW., Washington, DC 20219. For security reasons, the OCC requires that visitors make an appointment to inspect comments. You may do so by calling (202) 649–6700. Upon arrival, visitors will be required to present valid government-issued photo identification and to submit to security screening in order to inspect and photocopy comments.

All comments received, including attachments and other supporting materials, are part of the public record and subject to public disclosure. Do not enclose any information in your comment or supporting materials that you consider confidential or inappropriate for public disclosure.

Additionally, please send a copy of your comments by mail to: OCC Desk Officer, 1557–0317, U.S. Office of Management and Budget, 725 17th Street NW., #10235, Washington, DC 20503, or by email to: *oira submission@omb.eop.gov.*

FOR FURTHER INFORMATION CONTACT: You may request additional information from Johnny Vilela or Mary H. Gottlieb, OCC Clearance Officers, (202) 649–5490, Legislative and Regulatory Activities Division, Office of the Comptroller of the Currency, 400 7th Street SW., Suite 3E–218, Mail Stop 9W–11, Washington, DC 20219.

SUPPLEMENTARY INFORMATION: The OCC is seeking to renew, without change, the following collection:

Title: Lending Limits—12 CFR 32.9.

Type of Review: Extension, without revision, of a currently approved collection.

OMB Control Number: 1557–0317.

Description: Pursuant to section 610 of the Dodd-Frank Wall Street Reform and Consumer Protection Act of 2010, Public Law 111–203, 124 Stat. 1376 (2010), the OCC added § 32.9 to its lending limits regulation to cover credit exposures arising from derivative transactions and securities financing transactions. Twelve CFR 32.9 provides national banks and savings associations with three alternative methods for calculating the credit exposure of derivative transactions other than credit derivatives, a special rule for measuring the credit exposure of credit derivatives, and three alternative methods for calculating such exposure for securities financing transactions. The OCC provided these different methods in order to reduce the practical burden of such calculations, particularly for smaller and mid-size national banks and savings associations.

One method available for both derivative transactions and securities financing transactions is the Internal Model Method. Under this method, the use of a model (other than a model for which use has been approved for purposes of the Advanced Measurement Approach in the capital rules) must be approved in writing by the OCC (in the case of national banks and Federal savings associations) or the Federal Deposit Insurance Corporation (in the case of State savings associations) specifically for lending limit purposes. If a national bank or savings association proposes to use an internal model for which use has been approved for purposes of the Advanced Measurement Approach, the institution must provide written notification to the OCC or FDIC, as appropriate, prior to use of the model for lending limits purposes. Section 32.9 also requires OCC or FDIC approval of any substantive revisions to a model previously approved for lending limits purposes, or for which notice of its use for lending limits purposes previously had been provided, before the institution may use the revised model.

Affected Public: Businesses or other for-profit.

Burden Estimates: Estimated Number of Respondents: 238.

Estimated Number of Responses per Respondent: 2.

Estimated Annual Burden: 476 hours.

Frequency of Response: On occasion.

Comments: The OCC issued a notice for 60 days of comment concerning the collection. 78 FR 56770 (September 13, 2013). No comments were received. Comments continue to be invited on:

(a) Whether the collection of information is necessary for the proper performance of the functions of the OCC, including whether the information has practical utility;

(b) The accuracy of the OCC's estimate of the information collection burden;

(c) Ways to enhance the quality, utility, and clarity of the information to be collected;

(d) Ways to minimize the burden of the collection on respondents, including through the use of automated collection techniques or other forms of information technology; and

(e) Estimates of the capital or start-up costs and the costs associated with the operation, maintenance, and acquisition of services necessary to provide the required information.

Dated: November 15, 2013.

Stuart E. Feldstein,

Director, Legislative and Regulatory Activities Division.

[FR Doc. 2013–27872 Filed 11–20–13; 8:45 am]

BILLING CODE 4810–33–P

DEPARTMENT OF THE TREASURY

Office of the Comptroller of the Currency

Agency Information Collection Activities: Information Collection Renewal; Submission for OMB Review; Fair Credit Reporting—Affiliate Marketing

AGENCIES: Office of the Comptroller of the Currency (OCC), Treasury.

ACTION: Notice and request for comment.

SUMMARY: The OCC, as part of its continuing effort to reduce paperwork and respondent burden, invites the general public and other Federal agencies to comment on the renewal of an information collection, as required by the Paperwork Reduction Act of 1995 (PRA).

In accordance with the requirements of the PRA, an agency may not conduct or sponsor, and a respondent is not required to respond to, an information collection unless it displays a currently valid Office of Management and Budget (OMB) control number.

The OCC is soliciting comment concerning the renewal of an information collection titled ''Affiliate Marketing.'' The OCC is also giving notice that it has submitted a request for renewal of its information collection titled, ''Fair Credit Reporting—Affiliate Marketing'' to OMB for review.

DATES: Comments must be submitted on or before December 23, 2013.

ADDRESSES: Because paper mail in the Washington, DC area and at the OCC is subject to delay, commenters are encouraged to submit comments by email if possible. Comments may be sent to: Legislative and Regulatory Activities Division, Office of the Comptroller of the Currency, Attention: 1557–0230, 400 7th Street SW., Suite 3E–218, Mail Stop 9W–11, Washington, DC 20219. In addition, comments may be sent by fax to (571) 465–4326 or by electronic mail to *regs.comments@occ.treas.gov.* You may personally inspect and photocopy comments at the OCC, 400 7th Street SW., Washington, DC 20219. For security reasons, the OCC requires that visitors make an appointment to inspect comments. You may do so by calling (202) 649–6700. Upon arrival, visitors will be required to present valid government-issued photo identification and to submit to security screening in order to inspect and photocopy comments.

All comments received, including attachments and other supporting materials, are part of the public record and subject to public disclosure. Do not enclose any information in your comment or supporting materials that you consider confidential or inappropriate for public disclosure.

Additionally, please send a copy of your comments by mail to: OCC Desk Officer, 1557–230, U.S. Office of Management and Budget, 725 17th Street NW., #10235, Washington, DC 20503, or by email to: *oira submission@omb.eop.gov.*

FOR FURTHER INFORMATION CONTACT: You may request additional information by contacting: Johnny Vilela or Mary H. Gottlieb, OCC Clearance Officers, (202) 649–5490, Legislative and Regulatory Activities Division, Office of the Comptroller of the Currency, 400 7th Street SW., Washington, DC 20219.

SUPPLEMENTARY INFORMATION: The OCC is seeking renewal, without change, of the following information collection:

Title: Fair Credit Reporting—Affiliate Marketing.

OMB Control No.: 1557–0230.

Affected Public: Businesses or other for-profit.

Burden Estimates:

Estimated Number of Respondents: 166,444.

Total Annual Burden: 17,189 hours.

Frequency of Response: On occasion.

Description: Section 214 of the FACT Act,[1] which added section 624 to the Fair Credit Reporting Act (FCRA),[2] generally prohibits a person from using certain information received from an affiliate to make a solicitation for marketing purposes to the consumer, unless the consumer is given notice and an opportunity and simple method to opt out of making such solicitations. Section 214 also requires the Agencies,[3] the Securities and Exchange Commission (SEC), and the Federal Trade Commission (FTC), in consultation and coordination with each other, to issue regulations implementing section 214 that, to the extent possible, are consistent and comparable.

Administration of these regulations, which were codified by the OCC at 12 CFR 41.20–41.28 and that have not changed since they were last cleared by OMB under the PRA, has been transferred to the Bureau of Consumer Financial Protection (CFPB) and are now found at 12 CFR 1022.20–1022.27. Title X of the Dodd-Frank Wall Street Reform and Consumer Protection Act,[4] (Dodd-Frank Act) transferred the regulations and the CFPB republished them (76 FR 79308 (December 21, 2011)). The burden estimates have been revised to remove the burden attributable to OCC-regulated institutions with over $10 billion in total assets, now carried by CFPB pursuant to section 1025 of the Dodd-Frank Act. The OCC retains enforcement authority and carries burden for those institutions under its supervision with total assets of $10 billion or less.

Financial institutions use the required notices to inform consumers about their rights under section 214 of the FACT Act. Consumers use the notices to decide if they want to receive solicitations for marketing purposes or opt out. Financial institutions use the consumers' opt out responses to determine the permissibility of making a solicitation for marketing purposes to consumers.

If a person receives certain consumer eligibility information from an affiliate, the person may not use that information to make solicitations to the consumer about its products or services, unless the consumer is given notice and a simple method to opt out of such use of the

[1] Fair and Accurate Credit Transactions Act of 2003, Public Law 108–159, 117 Stat. 1952 (December 4, 2003).

[2] 15 U.S.C. 1681 *et seq.*

[3] OCC, Board of Governors of the Federal Reserve System, and the Federal Deposit Insurance Corporation.

[4] Public Law 111–203, 124 Stat. 1955, July 21, 2010.

information, and the consumer does not opt out. Exceptions include, a person using eligibility information: (1) To make solicitations to a consumer with whom the person has a pre-existing business relationship; (2) to perform services for another affiliate subject to certain conditions; (3) in response to a communication initiated by the consumer; or (4) to make a solicitation that has been authorized or requested by the consumer. A consumer's affiliate marketing opt-out election must be effective for a period of at least five years. Upon expiration of the opt-out period, the consumer must be given a renewal notice and an opportunity to renew the opt-out before information received from an affiliate may be used to make solicitations to the consumer.

Comments: The OCC issued a notice in the **Federal Register** for 60 days of comment on September 13, 2013 (78 FR 56771). No comments were received. Comments continue to be invited on:

(a) Whether the collection of information is necessary for the proper performance of the functions of the OCC, including whether the information has practical utility;

(b) The accuracy of the OCC's estimate of the information collection burden;

(c) Ways to enhance the quality, utility, and clarity of the information to be collected;

(d) Ways to minimize the burden of the collection on respondents, including through the use of automated collection techniques or other forms of information technology; and

(e) Estimates of capital or start-up costs and costs of operation, maintenance, and purchase of services to provide information.

Dated: November 15, 2013.

Stuart E. Feldstein,

Director, Legislative and Regulatory Activities Division.

[FR Doc. 2013–27873 Filed 11–20–13; 8:45 am]

BILLING CODE 4810–33–P

DEPARTMENT OF THE TREASURY

Internal Revenue Service

Proposed Collection; Comment Request for Form 8963

AGENCY: Internal Revenue Service (IRS), Treasury.

ACTION: Notice and request for comments.

SUMMARY: The Department of the Treasury, as part of its continuing effort to reduce paperwork and respondent burden, invites the general public and other Federal agencies to take this opportunity to comment on proposed and/or continuing information collections, as required by the Paperwork Reduction Act of 1995, Public Law 104–13 (44 U.S.C. 3506(c)(2)(A)). Currently, the IRS is soliciting comments concerning Form 8963, Report of Health Insurance Provider Information.

DATES: Written comments should be received on or before January 21, 2014 to be assured of consideration.

ADDRESSES: Direct all written comments to Yvette Lawrence, Internal Revenue Service, Room 6129, 1111 Constitution Avenue NW., Washington, DC 20224.

FOR FURTHER INFORMATION CONTACT: Requests for additional information or copies of the form and instructions should be directed to R. Joseph Durbala, (202) 622–3634, at Internal Revenue Service, Room 6129, 1111 Constitution Avenue NW., Washington, DC 20224, or through the internet at *RJoseph.Durbala@irs.gov.*

SUPPLEMENTARY INFORMATION:

Title: Report of Health Insurance Provider Information.

OMB Number: 1545–2249.

Form Number: Form 8963.

Abstract: This is a new form established under Section 9010 of the Patient Protection and Affordable Care Act (PPACA), Public Law 111–148 (124 Stat. 119 (2010)), as amended by section 10905 of PPACA, and as further amended by section 1406 of the Health Care and Education Reconciliation Act of 2010, Public Law 111–152 (124 Stat. 1029 (2010)), which requires any covered entity engaged in the business of providing health insurance related to United States health risks to annually report its net premiums *written.*

Current Actions: This is a new form. This form is being submitted for OMB approval.

Type of Review: New Form.

Affected Public: Businesses and other for-profit organizations and Not-for-profit organizations.

Estimated Number of Respondents: 2,400.

Estimated Time per Respondent: 7 hours 25 minutes.

Estimated Total Annual Burden Hours: 17,808.

The following paragraph applies to all of the collections of information covered by this notice:

An agency may not conduct or sponsor, and a person is not required to respond to, a collection of information unless the collection of information displays a valid OMB control number. Books or records relating to a collection of information must be retained as long as their contents may become material in the administration of any internal revenue law. Generally, tax returns and tax return information are confidential, as required by 26 U.S.C. 6103. Pursuant to ACA section 9010, as amended, the information on this form is not subject to section 6103. All information on this form is subject to public disclosure.

Request for Comments: Comments submitted in response to this notice will be summarized and/or included in the request for OMB approval. All comments will become a matter of public record. Comments are invited on: (a) Whether the collection of information is necessary for the proper performance of the functions of the agency, including whether the information shall have practical utility; (b) the accuracy of the agency's estimate of the burden of the collection of information; (c) ways to enhance the quality, utility, and clarity of the information to be collected; (d) ways to minimize the burden of the collection of information on respondents, including through the use of automated collection techniques or other forms of information technology; and (e) estimates of capital or start-up costs and costs of operation, maintenance, and purchase of services to provide information.

Approved: November 14, 2013.

Yvette Lawrence,

IRS Reports Clearance Officer.

[FR Doc. 2013–27893 Filed 11–20–13; 8:45 am]

BILLING CODE 4830–01–P

DEPARTMENT OF THE TREASURY

Internal Revenue Service

Proposed Collection; Comment Request for Form 8955–SSA

AGENCY: Internal Revenue Service (IRS), Treasury.

ACTION: Notice and request for comments.

SUMMARY: The Department of the Treasury, as part of its continuing effort to reduce paperwork and respondent burden, invites the general public and other Federal agencies to take this opportunity to comment on proposed and/or continuing information collections, as required by the Paperwork Reduction Act of 1995, Public Law 104–13 (44 U.S.C. 3506(c)(2)(A)). Currently, the IRS is soliciting comments concerning Form 8955–SSA, Annual Registration Statement Identifying Separated Participants With Deferred Vested Benefits.

DATES: Written comments should be received on or before January 21, 2014 to be assured of consideration.

ADDRESSES: Direct all written comments to Yvette Lawrence, Internal Revenue Service, Room 6129, 1111 Constitution Avenue NW., Washington, DC 20224.

FOR FURTHER INFORMATION CONTACT: Requests for additional information or copies of the form and instructions should be directed to LaNita Van Dyke, at Internal Revenue Service, Room 6211, 1111 Constitution Avenue NW., Washington, DC 20224, or through the internet at *Lanita.VanDyke@irs.gov.*

SUPPLEMENTARY INFORMATION:

Title: Annual Registration Statement Identifying Separated Participants With Deferred Vested Benefits.

OMB Number: 1545–2187.

Form Number: Form 8955–SSA.

Abstract: The information provided by plan sponsors on Form 8955–SSA will be transmitted to the Social Security Administration (SSA) who will provide it to separated participants when those participants file for social security benefits.

Current Actions: There is no change in the paperwork burden previously approved by OMB.

Type of Review: Extension of a currently approved collection.

Affected Public: Businesses and other for-profit organizations.

Estimated Number of Respondents: 200,000.

Estimated Time per Respondent: 0 hours 49 minutes.

Estimated Total Annual Burden Hours: 166,000.

The following paragraph applies to all of the collections of information covered by this notice:

An agency may not conduct or sponsor, and a person is not required to respond to, a collection of information unless the collection of information displays a valid OMB control number. Books or records relating to a collection of information must be retained as long as their contents may become material in the administration of any internal revenue law. Generally, tax returns and tax return information are confidential, as required by 26 U.S.C. 6103.

Request for Comments: Comments submitted in response to this notice will be summarized and/or included in the request for OMB approval. All comments will become a matter of public record. Comments are invited on: (a) Whether the collection of information is necessary for the proper performance of the functions of the agency, including whether the information shall have practical utility; (b) the accuracy of the agency's estimate of the burden of the collection of information; (c) ways to enhance the quality, utility, and clarity of the information to be collected; (d) ways to minimize the burden of the collection of information on respondents, including through the use of automated collection techniques or other forms of information technology; and (e) estimates of capital or start-up costs and costs of operation, maintenance, and purchase of services to provide information.

Approved: November 4, 2013.

R. Joseph Durbala,

Tax Analyst.

[FR Doc. 2013–27887 Filed 11–20–13; 8:45 am]

BILLING CODE 4830–01–P

DEPARTMENT OF THE TREASURY

Internal Revenue Service

Proposed Collection; Comment Request for Form 8835

AGENCY: Internal Revenue Service (IRS), Treasury.

ACTION: Notice and request for comments.

SUMMARY: The Department of the Treasury, as part of its continuing effort to reduce paperwork and respondent burden, invites the general public and other Federal agencies to take this opportunity to comment on proposed and/or continuing information collections, as required by the Paperwork Reduction Act of 1995, Public Law 104–13(44 U.S.C. 3506(c)(2)(A)). Currently, the IRS is soliciting comments concerning Form 8835, Renewable Electricity Production Credit.

DATES: Written comments should be received on or before January 21, 2014 to be assured of consideration.

ADDRESSES: Direct all written comments to Yvette Lawrence, Internal Revenue Service, Room 6129, 1111 Constitution Avenue NW., Washington, DC 20224.

FOR FURTHER INFORMATION CONTACT: Requests for additional information or copies of the form and instructions should be directed to LaNita Van Dyke, at Internal Revenue Service, Room 6511, 1111 Constitution Avenue NW., Washington, DC 20224, or through the internet at *Lanita.VanDyke@irs.gov.*

SUPPLEMENTARY INFORMATION:

Title: Renewable Electricity Production Credit.

OMB Number: 1545–1362.

Form Number: Form 8835.

Abstract: Form 8835 is used to claim the renewable electricity production credit. The credit is allowed for the sale of electricity produced in the United States or U.S. possessions from qualified energy resources. The IRS uses the information reported on the form to ensure that the credit is correctly computed.

Current Actions: There are no changes being made to this form at this time.

Type of Review: Extension of a current OMB approval.

Affected Public: Business or other for-profit organizations and individuals.

Estimated Number of Respondents: 46.

Estimated Time per Respondent: 14 hrs. 23 minutes.

Estimated Total Annual Burden Hours: 662.

The following paragraph applies to all of the collections of information covered by this notice:

An agency may not conduct or sponsor, and a person is not required to respond to, a collection of information unless the collection of information displays a valid OMB control number. Books or records relating to a collection of information must be retained as long as their contents may become material in the administration of any internal revenue law. Generally, tax returns and tax return information are confidential, as required by 26 U.S.C. 6103.

Request for Comments: Comments submitted in response to this notice will be summarized and/or included in the request for OMB approval. All comments will become a matter of public record. Comments are invited on: (a) Whether the collection of information is necessary for the proper performance of the functions of the agency, including whether the information shall have practical utility; (b) the accuracy of the agency's estimate of the burden of the collection of information; (c) ways to enhance the quality, utility, and clarity of the information to be collected; (d) ways to minimize the burden of the collection of information on respondents, including through the use of automated collection techniques or other forms of information technology; and (e) estimates of capital or start-up costs and costs of operation, maintenance, and purchase of services to provide information.

Approved: November 4, 2013.

R. Joseph Durbala,

Tax Analyst.

[FR Doc. 2013–27890 Filed 11–20–13; 8:45 am]

BILLING CODE 4830–01–P

DEPARTMENT OF THE TREASURY

Internal Revenue Service

Proposed Collection; Comment Request for Form 8453–R

AGENCY: Internal Revenue Service (IRS), Treasury.

ACTION: Notice and request for comments.

SUMMARY: The Department of the Treasury, as part of its continuing effort to reduce paperwork and respondent burden, invites the general public and other Federal agencies to take this opportunity to comment on proposed and/or continuing information collections, as required by the Paperwork Reduction Act of 1995, Public Law 104–13 (44 U.S.C. 3506(c)(2)(A)). Currently, the IRS is soliciting comments concerning Form 8453–R, Declaration and Signature for Electronic Filing of Forms 8947 and 8963.

DATES: Written comments should be received on or before January 21, 2014 to be assured of consideration.

ADDRESSES: Direct all written comments to Yvette Lawrence, Internal Revenue Service, Room 6129, 1111 Constitution Avenue NW., Washington, DC 20224.

FOR FURTHER INFORMATION CONTACT: Requests for additional information or copies of the form and instructions should be directed to R. Joseph Durbala, (202) 622–3634, at Internal Revenue Service, Room 6129, 1111 Constitution Avenue NW., Washington, DC 20224, or through the internet at *RJoseph.Durbala@irs.gov*.

SUPPLEMENTARY INFORMATION:

Title: Declaration and Signature for Electronic Filing of Forms 8947 and 8963.

OMB Number: 1545-xxxx.

Form Number: Form 8453–R.

Abstract: This is a new form established under Section 9010 of the Patient Protection and Affordable Care Act (PPACA), Public Law 111–148 (124 Stat. 119 (2010)), as amended by section 10905 of PPACA, and as further amended by section 1406 of the Health Care and Education Reconciliation Act of 2010, Public Law 111–152 (124 Stat. 1029 (2010)), which requires that any covered entity engaged in the business of providing health insurance related to United States health risks must annually report its net premiums written. The purpose of the form is to authenticate the electronic filing of Form 8947, Report of Branded Prescription Drug Information and Form 8963, Report of Health Insurance Provider Information.

Current Actions: This is a new form. This form is being submitted for OMB approval.

Type of Review: New form.

Affected Public: Businesses and other for-profit organizations and not-for-profit organizations.

Estimated Number of Respondents: 2,550.

Estimated Time per Respondent: 1 hour 37 minutes.

Estimated Total Annual Burden Hours: 4,131.

The following paragraph applies to all of the collections of information covered by this notice:

An agency may not conduct or sponsor, and a person is not required to respond to, a collection of information unless the collection of information displays a valid OMB control number. Books or records relating to a collection of information must be retained as long as their contents may become material in the administration of any internal revenue law. Generally, tax returns and tax return information are confidential, as required by 26 U.S.C. 6103.

Request for Comments: Comments submitted in response to this notice will be summarized and/or included in the request for OMB approval. All comments will become a matter of public record. Comments are invited on: (a) Whether the collection of information is necessary for the proper performance of the functions of the agency, including whether the information shall have practical utility; (b) the accuracy of the agency's estimate of the burden of the collection of information; (c) ways to enhance the quality, utility, and clarity of the information to be collected; (d) ways to minimize the burden of the collection of information on respondents, including through the use of automated collection techniques or other forms of information technology; and (e) estimates of capital or start-up costs and costs of operation, maintenance, and purchase of services to provide information.

Approved: November 14, 2013.

Yvette Lawrence,

IRS Reports Clearance Officer.

[FR Doc. 2013–27892 Filed 11–20–13; 8:45 am]

BILLING CODE 4830–01–P

DEPARTMENT OF THE TREASURY

Internal Revenue Service

Information Collection Request

AGENCY: Internal Revenue Service (IRS), Treasury.

ACTION: Notice and request for comments.

SUMMARY: The Department of the Treasury, as part of its continuing effort to reduce paperwork and respondent burden, invites the general public and other Federal agencies to take this opportunity to comment on proposed and/or continuing information collections, as required by the Paperwork Reduction Act of 1995, Public Law 104–13 (44 U.S.C. 3506(c)(2)(A)). Currently, the IRS is soliciting comments concerning Employment Tax Adjustments.

DATES: Written comments should be received on or before January 21, 2014 to be assured of consideration.

ADDRESSES: Direct all written comments to Yvette Lawrence, Internal Revenue Service, Room 6129, 1111 Constitution Avenue NW., Washington, DC 20224.

FOR FURTHER INFORMATION CONTACT: Requests for additional information or copies of the form and instructions should be directed to LaNita Van Dyke, Internal Revenue Service, Room 6511, 1111 Constitution Avenue NW., Washington DC 20224, or through the internet, at *Lanita.VanDyke@irs.gov.*

SUPPLEMENTARY INFORMATION:

Title: Employment Tax Adjustments.

OMB Number: 1545–2097.

Form Number: REG–111583–07 [T.D. 9405(final)].

Abstract: This document contains temporary or final regulations relating to employment tax adjustments and employment tax refund claims. These regulations modify the process for making interest-free adjustments for both underpayments and overpayments of Federal Insurance Contributions Act (FICA) and Railroad Retirement Tax Act (RRTA) taxes and federal income tax withholding (ITW) under sections 6205(a) and 6413(a), respectively, of the Internal Revenue Code (Code).

Current Actions: There is no change in the paperwork burden previously approved by OMB. This form is being submitted for renewal purposes only.

Type of Review: Extension of a currently approved collection.

Affected Public: Businesses and other for-profit organizations.

Estimated Number of Respondents: 1,500,000.

Estimated Time per Respondent: 10 hours.

Estimated Total Annual Burden Hours: 15,000,000.

The following paragraph applies to all of the collections of information covered by this notice:

An agency may not conduct or sponsor, and a person is not required to

respond to, a collection of information unless the collection of information displays a valid OMB control number. Books or records relating to a collection of information must be retained as long as their contents may become material in the administration of any internal revenue law. Generally, tax returns and tax return information are confidential, as required by 26 U.S.C. 6103.

Request for Comments: Comments submitted in response to this notice will be summarized and/or included in the request for OMB approval. All comments will become a matter of public record. Comments are invited on: (a) Whether the collection of information is necessary for the proper performance of the functions of the agency, including whether the information shall have practical utility; (b) the accuracy of the agency's estimate of the burden of the collection of information; (c) ways to enhance the quality, utility, and clarity of the information to be collected; (d) ways to minimize the burden of the collection of information on respondents, including through the use of automated collection techniques or other forms of information technology; and (e) estimates of capital or start-up costs and costs of operation, maintenance, and purchase of services to provide information.

Approved: November 4, 2013.

R. Joseph Durbala,

Tax Analyst.

[FR Doc. 2013–27889 Filed 11–20–13; 8:45 am]

BILLING CODE 4830–01–P

DEPARTMENT OF THE TREASURY

Internal Revenue Service

Proposed Collection; Comment Request for Regulation Project

AGENCY: Internal Revenue Service (IRS), Treasury.

ACTION: Notice and request for comments.

SUMMARY: The Department of the Treasury, as part of its continuing effort to reduce paperwork and respondent burden, invites the general public and other Federal agencies to take this opportunity to comment on proposed and/or continuing information collections, as required by the Paperwork Reduction Act of 1995, Public Law 104–13 (44 U.S.C. 3506(c)(2)(A)). Currently, the IRS is soliciting comments concerning revision of Income Tax Regulations under Sections 358, 367, 884, and 6038B Dealing with Statutory Mergers or Consolidations Under Section 368(a)(1)(A) Involving One or More Foreign Corporations.

DATES: Written comments should be received on or before January 21, 2014 to be assured of consideration.

ADDRESSES: Direct all written comments to Yvette Lawrence, Internal Revenue Service, Room 6129, 1111 Constitution Avenue NW., Washington, DC 20224.

FOR FURTHER INFORMATION CONTACT: Requests for additional information or copies of the regulations should be directed to LaNita Van Dyke, Internal Revenue Service, Room 6511, 1111 Constitution Avenue NW., Washington DC 20224, or through the internet, at *Lanita.VanDyke@irs.gov.*

SUPPLEMENTARY INFORMATION:

Title: Revision of Income Tax Regulations under Sections 358, 367, 884, and 6038B Dealing with Statutory Mergers or Consolidations Under Section 368(a)(1)(A) Involving One or More Foreign Corporations.

OMB Number: 1545–1925.

Regulation Project Number: [REG–125628–01] [TD 9243(final)].

Abstract: The final regulation provides rules regarding the merger or consolidation of domestic or foreign corporations. This collection of information is necessary to preserve U.S. income taxation on gain of certain stock.

Current Actions: There is no change to this existing regulation.

Type of Review: Extension of a currently approved collection.

Affected Public: Business or other for-profit organizations.

Estimated Number of Respondents: 50.

Estimated Time per Respondent: 1 hr.

Estimated Total Annual Burden Hours: 50.

The following paragraph applies to all of the collections of information covered by this notice:

An agency may not conduct or sponsor, and a person is not required to respond to, a collection of information unless the collection of information displays a valid OMB control number. Books or records relating to a collection of information must be retained as long as their contents may become material in the administration of any internal revenue law. Generally, tax returns and tax return information are confidential, as required by 26 U.S.C. 6103.

Request for Comments: Comments submitted in response to this notice will be summarized and/or included in the request for OMB approval. All comments will become a matter of public record. Comments are invited on: (a) Whether the collection of information is necessary for the proper performance of the functions of the agency, including whether the information shall have practical utility; (b) the accuracy of the agency's estimate of the burden of the collection of information; (c) ways to enhance the quality, utility, and clarity of the information to be collected; (d) ways to minimize the burden of the collection of information on respondents, including through the use of automated collection techniques or other forms of information technology; and (e) estimates of capital or start-up costs and costs of operation, maintenance, and purchase of services to provide information.

Approved: November 4, 2013.

R. Joseph Durbala,

Tax Analyst.

[FR Doc. 2013–27891 Filed 11–20–13; 8:45 am]

BILLING CODE 4830–01–P

DEPARTMENT OF THE TREASURY

Internal Revenue Service

Open Meeting of the Taxpayer Advocacy Panel Toll-Free Phone Line Project Committee

AGENCY: Internal Revenue Service (IRS), Treasury.

ACTION: Notice of Meeting.

SUMMARY: An open meeting of the Taxpayer Advocacy Panel Toll-Free Phone Line Project Committee will be conducted. The Taxpayer Advocacy Panel is soliciting public comments, ideas, and suggestions on improving customer service at the Internal Revenue Service.

DATES: The meeting will be held Tuesday, December 17, 2013.

FOR FURTHER INFORMATION CONTACT: Linda Rivera at 1–888–912–1227 or (202) 622–8390.

SUPPLEMENTARY INFORMATION: Notice is hereby given pursuant to Section 10(a)(2) of the Federal Advisory Committee Act, 5 U.S.C. App. (1988) that an open meeting of the Taxpayer Advocacy Panel Toll-Free Phone Line Project Committee will be held Tuesday, December 17, 2013 at 11:00 a.m. Eastern Time via teleconference. The public is invited to make oral comments or submit written statements for consideration. Due to limited conference lines, notification of intent to participate must be made with Linda Rivera. For more information please contact: Ms. Rivera at 1–888–912–1227 or (202) 622–8390, or write TAP Office, 1111 Constitution Avenue NW., Room 1509—National Office, Washington, DC 20224, or contact us at the Web site: *http://www.improveirs.org.*

The committee will be discussing Toll-free issues and public input is welcomed.

Dated: November 14, 2013.

Otis Simpson,

Acting Director, Taxpayer Advocacy Panel.

[FR Doc. 2013–27886 Filed 11–20–13; 8:45 am]

BILLING CODE 4830–01–P

DEPARTMENT OF THE TREASURY

Internal Revenue Service

Open Meeting of the Taxpayer Advocacy Panel Taxpayer Assistance Center Improvements Project Committee

AGENCY: Internal Revenue Service (IRS), Treasury.

ACTION: Notice of meeting.

SUMMARY: An open meeting of the Taxpayer Advocacy Panel Taxpayer Assistance Center Improvements Project Committee will be conducted. The Taxpayer Advocacy Panel is soliciting public comments, ideas, and suggestions on improving customer service at the Internal Revenue Service.

DATES: The meeting will be held Tuesday, December 10, 2013.

FOR FURTHER INFORMATION CONTACT: Donna Powers at 1–888–912–1227 or (954) 423–7977.

SUPPLEMENTARY INFORMATION: Notice is hereby given pursuant to Section 10(a)(2) of the Federal Advisory Committee Act, 5 U.S.C. App. (1988) that a meeting of the Taxpayer Advocacy Panel Taxpayer Assistance Center Improvements Project Committee will be held Tuesday, December 10, 2013, at 2:00 p.m. Eastern Time. The public is invited to make oral comments or submit written statements for consideration. Due to limited conference lines, notification of intent to participate must be made with Donna Powers. For more information please contact Ms. Donna Powers at 1–888–912–1227 or (954) 423–7977, or write TAP Office, 1000 S. Pine Island Road, Plantation, FL 33324 or contact us at the Web site: *http://www.improveirs.org.*

The committee will be discussing various issues related to the Taxpayer Assistance Centers and public input is welcomed.

Dated: November 14, 2013.

Otis Simpson,

Acting Director, Taxpayer Advocacy Panel.

[FR Doc. 2013–27879 Filed 11–20–13; 8:45 am]

BILLING CODE 4830–01–P

DEPARTMENT OF THE TREASURY

Internal Revenue Service

Open Meeting of the Taxpayer Advocacy Panel Tax Forms and Publications Project Committee

AGENCY: Internal Revenue Service (IRS), Treasury.

ACTION: Notice of meeting.

SUMMARY: An open meeting of the Taxpayer Advocacy Panel Tax Forms and Publications Project Committee will be conducted. The Taxpayer Advocacy Panel is soliciting public comments, ideas and suggestions on improving customer service at the Internal Revenue Service.

DATES: The meeting will be held Wednesday, December 11, 2013.

FOR FURTHER INFORMATION CONTACT: Marisa Knispel at 1–888–912–1227 or 718–834–2203.

SUPPLEMENTARY INFORMATION: Notice is hereby given pursuant to section 10(a)(2) of the Federal Advisory Committee Act, 5 U.S.C. App. (1988) that an open meeting of the Taxpayer Advocacy Panel Tax Forms and Publications Project Committee will be held Wednesday, December 11, 2013 at 11:00 a.m. Eastern Time via teleconference. The public is invited to make oral comments or submit written statements for consideration. Due to limited conference lines, notification of intent to participate must be made with Ms. Knispel. For more information please contact Ms. Knispel at 1–888–912–1227 or 718–834–2203, or write TAP Office, 2 Metro Tech Center, 100 Myrtle Avenue, 7th Floor, Brooklyn, NY 11201, or contact us at the Web site: *http://www.improveirs.org.*

The committee will be discussing various issues related to Tax Forms and Publications and public input is welcomed.

Dated: November 14, 2013.

Otis Simpson,

Acting Director, Taxpayer Advocacy Panel.

[FR Doc. 2013–27885 Filed 11–20–13; 8:45 am]

BILLING CODE 4830–01–P

DEPARTMENT OF THE TREASURY

Internal Revenue Service

Open Meeting of the Taxpayer Advocacy Panel Notices and Correspondence Project Committee

AGENCY: Internal Revenue Service (IRS), Treasury.

ACTION: Notice of meeting.

SUMMARY: An open meeting of the Taxpayer Advocacy Panel Notices and Correspondence Project Committee will be conducted. The Taxpayer Advocacy Panel is soliciting public comments, ideas, and suggestions on improving customer service at the Internal Revenue Service.

DATES: The meeting will be held Wednesday, December 11, 2013.

FOR FURTHER INFORMATION CONTACT: Timothy Shepard at 1–888–912–1227 or 206–220–6095.

SUPPLEMENTARY INFORMATION: Notice is hereby given pursuant to Section 10(a)(2) of the Federal Advisory Committee Act, 5 U.S.C. App. (1988) that a meeting of the Taxpayer Advocacy Panel Notices and Correspondence Project Committee will be held Wednesday, December 11, 2013, at 12 p.m. Eastern Time via teleconference. The public is invited to make oral comments or submit written statements for consideration. Due to limited conference lines, notification of intent to participate must be made with Timothy Shepard. For more information please contact Mr. Shepard at 1–888–912–1227 or 206–220–6095, or write TAP Office, 915 2nd Avenue, MS W–406, Seattle, WA 98174, or contact us at the Web site: *http://www.improveirs.org.*

The agenda will include a discussion on various letters, and other issues related to written communications from the IRS.

Dated: November 14, 2013.

Otis Simpson,

Acting Director, Taxpayer Advocacy Panel.

[FR Doc. 2013–27882 Filed 11–20–13; 8:45 am]

BILLING CODE 4830–01–P

DEPARTMENT OF THE TREASURY

Internal Revenue Service

Open Meeting of the Taxpayer Advocacy Panel Taxpayer Communications Project Committee

AGENCY: Internal Revenue Service (IRS), Treasury.

ACTION: Notice of meeting.

SUMMARY: An open meeting of the Taxpayer Advocacy Panel Taxpayer Communications Project Committee will be conducted. The Taxpayer Advocacy Panel is soliciting public comments, ideas, and suggestions on improving customer service at the Internal Revenue Service.

DATES: The meeting will be held Thursday, December 19, 2013.

FOR FURTHER INFORMATION CONTACT: Ellen Smiley or Patti Robb at 1–888–912–1227 or 414–231–2360.

SUPPLEMENTARY INFORMATION: Notice is hereby given pursuant to Section 10(a)(2) of the Federal Advisory Committee Act, 5 U.S.C. App. (1988) that an open meeting of the Taxpayer Advocacy Panel Taxpayer Communications Project Committee will be held Thursday, December 19, 2013, at 2:00 p.m. Eastern Time via teleconference. The public is invited to make oral comments or submit written statements for consideration. Due to limited conference lines, notification of intent to participate must be made with Ms. Ellen Smiley or Ms. Patti Robb. For more information please contact Ms. Smiley or Ms. Robb at 1–888–912–1227 or 414–231–2360, or write TAP Office Stop 1006MIL, 211 West Wisconsin Avenue, Milwaukee, WI 53203–2221, or post comments to the Web site: *http://www.improveirs.org.*

The committee will be discussing various issues related to Taxpayer Communications and public input is welcome.

Dated: November 14, 2013.

Otis Simpson,

Acting Director, Taxpayer Advocacy Panel.

[FR Doc. 2013–27880 Filed 11–20–13; 8:45 am]

BILLING CODE 4830–01–P

FEDERAL REGISTER

Vol. 78 Thursday,

No. 225 November 21, 2013

Part II

Department of Transportation

National Highway Traffic Safety Administration

49 CFR Part 572

Anthropomorphic Test Devices; Q3s 3-Year-Old Child Side Impact Test Dummy, Incorporation by Reference; Proposed Rule

DEPARTMENT OF TRANSPORTATION

National Highway Traffic Safety Administration

49 CFR Part 572

[Docket No. NHTSA–2013–0118]

RIN 2127–AL04

Anthropomorphic Test Devices; Q3s 3-Year-Old Child Side Impact Test Dummy, Incorporation by Reference

AGENCY: National Highway Traffic Safety Administration (NHTSA), Department of Transportation (DOT).

ACTION: Notice of proposed rulemaking (NPRM).

SUMMARY: This document proposes to amend our regulations to add specifications and qualification requirements for an anthropomorphic test device (ATD) representing a 3-year-old child, called the ''Q3s'' side impact test dummy. The agency plans to use the Q3s to test child restraint systems to new side impact performance requirements which NHTSA will propose to adopt into the Federal motor vehicle safety standard for child restraint systems by way of a separate NPRM. Adopting side impact protection requirements is consistent with a statutory provision set forth in the ''Moving Ahead for Progress in the 21st Century Act'' (July 6, 2012), that the agency issue a final rule to improve the protection of children seated in child restraint systems during side impacts.

DATES: You should submit your comments early enough to ensure that Docket Management receives them not later than January 21, 2014. *Proposed effective date:* The CFR would be amended on the date 60 days after date of publication of the final rule.

ADDRESSES: You may submit comments to the docket number identified in the heading of this document by any of the following methods:

- *Federal eRulemaking Portal:* Go to *http://www.regulations.gov.* Follow the online instructions for submitting comments.
- *Mail:* Docket Management Facility, M–30, U.S. Department of Transportation, West Building, Ground Floor, Rm. W12–140, 1200 New Jersey Avenue SE., Washington, DC 20590.
- *Hand Delivery or Courier:* West Building Ground Floor, Room W12–140, 1200 New Jersey Avenue SE., between 9 a.m. and 5 p.m. Eastern Standard Time, Monday through Friday, except Federal holidays.
- *Fax:* (202) 493–2251.

Regardless of how you submit your comments, you should mention the docket number of this document.

You may call the Docket at 202–366–9324.

Instructions: For detailed instructions on submitting comments and additional information on the rulemaking process, see the Public Participation heading of the Supplementary Information section of this document. Note that all comments received will be posted without change to *http://www.regulations.gov*, including any personal information provided. Please see the Privacy Act discussion below.

Privacy Act: Anyone is able to search the electronic form of all comments received into any of our dockets by the name of the individual submitting the comment (or signing the comment, if submitted on behalf of an association, business, labor union, etc.). You may review DOT's complete Privacy Act Statement in the **Federal Register** published on April 11, 2000 (65 FR 19477–78).

FOR FURTHER INFORMATION CONTACT: For technical issues: Peter Martin, NHTSA Office of Crashworthiness Standards (telephone 202–366–5668) (fax 202–493–2990). For legal issues: Deirdre Fujita, NHTSA Office of Chief Counsel (telephone 202–366–2992) (fax 202–366–3820). Mailing address: National Highway Traffic Safety Administration, U.S. Department of Transportation, 1200 New Jersey Avenue SE., West Building, Washington, DC 20590.

SUPPLEMENTARY INFORMATION:

Table of Contents

I. Introduction
II. Background
  a. Evolution of the Dummy
  b. Developments
  c. Build Level D
III. Description
  a. General Construction
  b. Instrumentation
IV. Biofidelity
  a. Anthropometry
  b. Biofidelity Assessment Under Dynamic Loading
V. Repeatability and Reproducibility
  a. R&R in Sled Tests
  b. R&R in Component Qualification Tests
VI. Qualification Tests
  a. Overview of Proposed Corridors
  b. Rationale for the Tests
  c. New and Modified Part 572 Tests and Equipment
  d. Proposed Test Specifications and Performance Requirements
VII. Durability
  a. High-Energy Component Tests
  b. Q3s Servicing and Maintenance
VIII. Drawings and Patents
IX. Consideration of Alternatives
X. Rulemaking Analyses and Notices
XI. Public Participation

I. Introduction

This document proposes to amend 49 CFR Part 572 to add specifications and qualification requirements for a test dummy representing a 3-year-old child, called the ''Q3s'' side impact test dummy. The Q3s is a modified version of a European side impact dummy. In accordance with the ''Moving Ahead for Progress in the 21st Century Act'' (MAP–21) (Pub. L. 112–141), NHTSA will be issuing a proposal, which we expect to publish shortly, to amend Federal Motor Vehicle Safety Standard (FMVSS) No. 213, ''Child restraint systems'' (49 CFR 571.213), to adopt side impact protection requirements for child restraints.[1] The agency is considering a proposal that incorporates the Q3s in the side impact compliance test procedure.

This document proposes to incorporate specifications and qualification requirements for the Q3s into 49 CFR Part 572, ''Anthropomorphic test devices.'' The Q3s would be specified in a new subpart W. This NPRM proposes incorporating by reference a parts list, a set of design drawings, and a ''Procedures for Assembly, Disassembly and Inspection (PADI)'' document, to ensure that all Q3s dummies are the same in their design and construction.[2] Subpart W of 49 CFR Part 572 would specify performance tests that serve to assure that the Q3s responses are within the established qualification corridors and further assure the uniformity of dummy assembly, structural integrity, consistency of response, and adequacy of instrumentation. These specifications ensure the repeatability and reproducibility of the dummy's impact response in child restraint compliance tests.

The agency plans to propose adding a side impact test to FMVSS No. 213, one in which child restraint systems (CRSs) sold for children weighing up to 18 kilograms (kg) (40 pounds (lb)) must protect the child occupant in a dynamic sled test simulating a vehicle-to-vehicle side impact.[3] We are considering using

[1] Subtitle E of MAP–21, entitled ''Child Safety Standards,'' includes § 31501(a) which states that, not later than 2 years after the date of enactment of the Act, the Secretary shall issue a final rule amending Federal Motor Vehicle Safety Standard Number 213 to improve the protection of children seated in child restraint systems during side impact crashes.

[2] Drawings and the PADI for the Q3s are available for examination in the docket for this NPRM.

[3] A discussion of NHTSA's research evaluating and developing the side impact test procedure can be found in Sullivan et al., ''NHTSA's Evaluation of a Potential Child Side Impact Test Procedures,'' 22nd International Technical Conference on the Enhanced Safety of Vehicles, Paper No. 2011–0227 (2011).

the Q3s to test child restraints recommended for children in a weight range that includes 10 kg to 18 kg (22 to 40 lb). Among other things, we are considering a proposal that would require those child restraints to limit the risk of head and chest injury to children in a side impact. We are considering using the Q3s to measure the risk of head injury by way of a head injury criterion (HIC) (computed within a specified timeframe, e.g., 15 millisecond (ms) (HIC15)), and the risk of chest injury using thorax deflection as a criterion.

NHTSA seeks to adopt side impact protection requirements in FMVSS No. 213 that would be evaluated in a dynamic test simulating an actual vehicle crash. Our goal has been to use an anthropomorphic test device (ATD) that has a sound biofidelic response under lateral loading, with internal instrumentation sufficient to record injurious body loads. We seek to adopt an ATD that is suitable for use in regulatory tests with demonstrated repeatability, reproducibility, and durability. Within a test laboratory, the ATD would be practical to handle and maintain. The dummy would be available at a reasonable cost.

The Q3s test dummy appears to have all of the above attributes. As discussed in this NPRM, NHTSA is satisfied with the overall biofidelity of the Q3s and we have found that it exhibits repeatable and reproducible performance in CRS side impact sled testing and in component-level qualification testing. The Q3s demonstrates sufficient durability in high-energy qualification tests and in CRS side impact sled testing. The agency has tentatively concluded that the dummy is a reliable test device that will provide valuable data in assessing the potential for injury in side impacts and is suitable for incorporation into Part 572.

II. Background

a. Evolution of the Dummy

The Q3s evolved from predecessor P-series test dummies developed by the Netherlands Organization for Applied Scientific Research (TNO). The P-series first was introduced into European CRS standards in 1981 with the adoption of United Nations Economic Commission for Europe (UNECE) Regulation No. 44, ''Uniform Provisions Concerning the Approval of Restraining Devices for Child Occupants of Power-Driven Vehicles (Child Restraint Systems).'' Initially, the P-series of dummies served only as CRS loading devices to assure CRS integrity in a frontal dynamic sled test.

In 1993, the European Commission formed a child dummy working group to develop a successor series of dummies called the Q-series. It was envisioned that the Q-series dummies would be used in frontal and side impact tests, and would be more anthropometrically correct than the P-series, and instrumented to enable injury assessment for the head, neck, and chest. The conceptual dummy design was led by TNO, while working group members as a whole established the anthropometry, biofidelity, and measurement requirements for the new Q-series. In late 1997, the specifications for the first dummy of the Q-series, the three-year-old version known as the ''Q3,'' were reported by TNO.

In 1999, a dummy manufacturer then named First Technology Safety Systems (FTSS) [4] acquired the dummy development and manufacturing business of TNO. At that time, testing indicated that the Q3 dummy's performance was suboptimal in frontal testing and even more so in lateral.[5] Around 2001, FTSS initiated the design cycle for the Q3s, which was an improved side impact version of the Q3.

In early 2002, NHTSA tested a prototype version of the Q3s.[6] NHTSA evaluated this Q3s unit using qualification-style pendulum and impactor tests to assess functionality, durability, and biofidelity. We determined that the thorax of the prototype appeared biofidelic and repeatable, but the shoulder and pelvis were much too stiff. Moreover, the neck was a single-piece rubber column (i.e., it was not segmented by aluminum discs as is typical in other dummy necks), and we found its biofidelity to be marginal in frontal and lateral flexion. In our tests, we observed that the rubber neck material tended to bunch together at maximum flexion, which appeared to improperly restrict the neck bending.

Other organizations acquiring prototype Q3s units included Transport Canada and Takata Holdings (Takata). Transport Canada explored the biofidelity of the Q3s through impacts delivered by pendulums and impactor testing. Takata exercised the dummy by performing several sets of sled tests with the ATD seated within a CRS.[7] Both Transport Canada and Takata found problems with their Q3s units similar to those found by NHTSA. These problems were conveyed to FTSS through public critiques, and through committee meetings of the International Organization for Standardization (ISO) and SAE International (SAE).[8]

Meanwhile, SAE developed new biofidelity response targets for child-sized side impact ATDs, including a three-year-old child dummy, to support work on side impact protection for children.[9] The new child targets were determined by scaling adult biofidelity targets previously established by ISO.[10] These targets became a new set of criteria for FTSS to incorporate into the dummy design, in addition to solving the functionality and durability problems noted by NHTSA and the other organizations.

FTSS continued to work on the Q3s and in April 2006, released the Q3s Build Level A, its first production version of a new, Q3s-specific design. Within a year, several additional upgrades were incorporated into the design and by July 2007 Build Level C was released.

b. Developments

In 2007, the Occupant Safety Research Partnership (OSRP),[11] together with

[4] In 2010, FTSS was merged into a new company, Humanetics Innovative Solutions (Humanetics). In this preamble, when we discuss work done by the company prior to 2010, we use the name FTSS. When we refer to the company's activities after 2010, we will refer to the name ''Humanetics.''

[5] The Q3 was assessed in: Berliner et al. (2000), Comparative evaluation of the Q3 and Hybrid III 3-Year-Old dummies in biofidelity and static out-of-position airbag tests, Stapp Car Crash Journal, V44: 25–50. Since the Q3 had yet to show it was suitable for side impact testing, NHTSA chose to use the HIII–3C in child restraint side impact testing the agency conducted following on the Transportation Recall Enhancement, Accountability and Documentation Act of 2000 (TREAD Act). The testing led up to an advance notice of proposed rulemaking (ANPRM) which NHTSA published on May 2, 2002, 67 FR 21836.

[6] The unit was a modified Q3 that NHTSA had owned.

[7] Takata was developing a ''sled-on-sled'' test methodology. Takata was also involved with the International Organization for Standardization (ISO) and UNECE Reg. No. 44 committees on CRS sled test development, and for this purpose Takata also tested the P3, Q3, and the HIII–3C on its sled system.

[8] ISO is a worldwide standards-setting organization. The Q3s dummy was discussed in the meetings of ISO Technical Committee TC 22, Road vehicles, Subcommittee SC 12, Passive safety crash protection systems. SAE is also a worldwide standards-setting organization.

[9] The work of SAE to establish biofidelity targets for child ATDs was overseen by the Biomechanics and Simulation Standards Committee. The targets and methodologies are published in Irwin AL, Mertz HJ, Elhagediab AM, Moss S (2002), Guidelines for Assessing Biofidelity of Side Impact Dummies of Various Sizes and Ages. Stapp Car Crash Journal V46: 297–319.

[10] ISO/TR 9790:1999 Road vehicles—Anthropomorphic side impact dummy—Lateral impact response requirements to assess the biofidelity of the dummy.

[11] OSRP is an organization of the ''United States Council for Automotive Research (USCAR),'' which is a collaborative technology organization of Chrysler Group LLC, Ford Motor Company and General Motors Company.

Transport Canada (TC), tested Q3s Build Level C units to evaluate the biofidelity and durability of the dummy, as did NHTSA. Extensive testing was conducted to evaluate the biofidelity of the head, neck, shoulder, thorax, and pelvis against the new SAE side impact response corridors. In addition, the dummy was evaluated against targets for the response of the neck in flexion and the response of the shoulder under lateral loading.[12]

As a result of the OSRP/TC and NHTSA evaluations of Build Level C units, three key deficiencies emerged: (1) The neck did not provide biofidelic responses in the lateral bending mode; (2) the upper femur ball could dislodge from the hip socket during sled tests; and (3) the thorax exhibited cracks near the spine box following typical lateral impacts.

c. Build Level D

Over the next several years, FTSS (hereinafter ''Humanetics'') improved the performance of the Q3s as a result of the findings of OSRP/TC and NHTSA.

Neck and Femur and Hip Redesigns

Although Humanetics had incorporated a redesign of the neck into Build Level C, the OSRP/TC and NHTSA tests indicated that the neck was in need of further work. Previously, NHTSA had designed a head and neck retrofit for side impact applications for the Hybrid III 3-year-old child dummy (HIII–3C). Tests of this redesigned neck showed that it provided a more biofidelic response in lateral flexion, and better limited the amount of axial twist than the neck of the Q3s Build Level C.[13] The NHTSA-developed neck specifications [14] were applied by Humanetics to the Q3s, and the new neck was incorporated into the Q3s in 2009, with subsequent revisions by NHTSA to the neck center cable in 2012.

NHTSA also contributed to the redesign of the femur and hip and several other minor parts of the dummy. The revisions were undertaken to resolve the problem of the upper femur ball becoming dislodged from the pelvis hip cup. This was accomplished by replacing the femur ball and plastic hip cup with hardened aluminum components. The new pelvis design was incorporated into the Q3s in 2009.

Thorax Material Selection

The thorax of the Q3s is a one-piece plastic casting. The cracks near the spine box have been addressed by a change to a new castable polyurethane resin material known by its trade name, Adiprene.

To assess the durability of the Q3s, NHTSA had established thorax durability criteria consisting of 100 lateral impacts conducted using the qualification test parameters (3.8 kg (8.4 lb) impactor at 3.3 meters per second (m/s)) and ten additional high-severity impacts at 4.2 m/s. In 2011, Humanetics incorporated Adiprene into the production level Q3s. Test dummies with the new thorax material were able to meet the agency's thorax durability criteria.

Built Level D Retrofit

The above revisions have been incorporated in a production version of the Q3s dummy that is commercially available from Humanetics. Humanetics' latest version of the Q3s, Build Level D, was released in December 2010 and updated in 2011 with the Adiprene thorax, and again in 2012 with a revision to the neck center cable. The latest revisions have been retrofitted to the four Q3s units owned by NHTSA. In the agency's subsequent tests—including CRS sled testing and qualification-style impact testing—the revised neck was demonstrated to meet NHTSA's performance criteria, and the revised pelvis and thorax have shown no signs of failure and no degradation of performance.[15]

III. Description

The Q3s weighs 14.5 kg (32.0 lb). The 539 millimeter (mm) seated height of the dummy is representative of a 50th percentile 3-year-old child. The cost of an uninstrumented Q3s unit is about $48,750. The cost of a minimum set of instruments needed for qualification and compliance testing adds approximately $18,200, for a total cost of about $66,950.

a. General Construction

With the exception of fasteners, instrument mounting plates, and stiffeners for the femurs, the Q3s is almost completely devoid of steel. The Q3s has about half the number of parts as the HIII–3C, which eases its assembly and disassembly compared to the Hybrid III child dummies. The main parts of the dummy are described below.[16]

Head

The Q3s head is a fiberglass mold and consists of the skull and a removable rear skull cap. Both parts are covered with a softer plastic material that simulates flesh and provides a biofidelic response to impact. The Q3s has a featureless face. The flesh is bonded directly to the skull and skull cap to ensure a proper fit and cannot be separated. The head cavity is large enough to allow use of several instruments, including linear accelerometers and angular velocity sensors.

Thorax

The thorax of the Q3s consists of a one-piece solid ribcage molded of polyurethane with a thin layer of polyvinyl chloride (PVC) ''skin'' bonded to the outer aspect. The ribcage is bolted to an aluminum spine. The molded part is contoured to take the shape of a human. The variable thickness of the part is purposefully designed so that, together with a properly selected polyurethane density, the thorax provides a biofidelic response to impact loading. An internally mounted IR–TRACC [17] measures the deflection of the

[12] The fore-aft neck targets had previously served as design targets for the Q-series (Irwin, AL and Mertz, HJ (1997), ''Biomechanical Basis for the CRABI and Hybrid III Child Dummies,'' Stapp Car Crash Journal V41: 1–12, SAE International, Warrendale, PA), while the shoulder targets were newly developed (Bolte, JH et al., (2003), ''Shoulder impact response and injury due to lateral and oblique loading,'' Stapp Car Crash Journal, V47, SAE International, Warrendale, PA). NHTSA's test results were reported in: Rhule, R (2008), Side impact child dummy development, 2008 SAE Government/Industry Meeting, Washington DC, May 2008. Download at: *http://www.nhtsa.gov/Research/Public+Meetings/SAE+2008+Government+Industry+Meeting* (last accessed March 25, 2013). OSRP results were reported in ISO committee meetings.

[13] Test results were reported in: Wang, ZJ (2009), Q3s improvement and Q6s development, 2009 SAE Government/Industry Meeting, Washington DC, Feb. 2009. Download at: *http://www.sae.org/events/gim/presentations/2009/jerrywang.pdf* (last accessed March 25, 2013).

[14] NHTSA's retrofit package included highly detailed specifications, including engineering drawings for fabrication of the neck component and response specifications for its dynamic performance.

[15] NHTSA has prepared and docketed a technical report, ''Evaluation of the Q3s Three Year Old Child Side Impact Dummy: Repeatability, Reproducibility, and Durability (2012),'' which includes a section that demonstrates the durability of the Q3s.

[16] The Q3s leg femur bone is constructed of polyurethane molded around a steel rod that reinforces the bone. The lower leg bone is made of polyurethane. Both the upper and lower leg bones are surrounded by moldings that simulate flesh. The feet have no bone structure or articulation. The Q3s's arms are a combination of plastics and metal. The elbow joint can be adjusted and set in a selected position. Vinyl/foam coverings surround the bones and hands are part of the lower arm covering.

[17] The Infra Red Telescoping Rod for Assessment of Chest Compression (IR–TRACC) was developed by General Motors, and first presented in: Rouhana SW., Elhagediab AM, Chapp JJ (1998), ''A high-speed sensor for measuring chest deflection in crash test dummies,'' Proceedings of the 16th International Technical Conference on the Enhanced Safety of Vehicles, Windsor, Ontario, Canada, May 31–June 4, 1998, Paper Number 98–S9–O–15, 1998.

lateral aspect of the ribcage relative to the spine. A neoprene suit fits over the torso, similar to a wetsuit.

Neck

The Q3s neck is a segmented design that consists of a column of three natural rubber segments bonded to four aluminum disks. A six-axis upper neck load cell is mounted at the neck/head interface. The rubber segments have an oval-like shape with circumferential V-shaped grooves. A safety cable made from wire rope runs through the center of the neck and provides axial resistance.

Shoulder

The Q3s shoulder design is molded from natural rubber into a hollowed, rectangular structure that allows controlled buckling when the shoulder is struck on the lateral aspect. The shoulder joint itself consists of a ball and socket in order to simulate the humerus-scapula joint. The upper arm has urethane flesh covering the entire outer surface of the arm which helps reduce the inertial peak from a pendulum impact. A string potentiometer is built into the shoulder assembly to measure the lateral deflection of the shoulder socket joint relative to the spine.

Spine

A short interface block connects the lower neck to the upper thoracic spine. The thoracic spine itself is a rectangular column machined from aluminum and about 140 mm long. It interfaces with a rubber cylindrical prism in the upper lumbar region. A short block connects the rubber lumbar column to the pelvis assembly.

Abdomen

The abdomen is similar to other ATDs in that it consists of a molded, foam-filled shell with a PVC outer skin. This shell is uninstrumented and fits between the ribcage and the pelvis.

Pelvis

The pelvis has two parts: A pelvic bone casting made of a zinc alloy encased snuggly within a molded polyurethane flesh. The pelvis casting is configured to accept an accelerometer array and a pubic subassembly accommodating a pubic load cell. The hip cups and femur heads are hardened aluminum.

Reversibility

The Q3s design incorporates reversibility features to accommodate the dummy's use for both left and right side impacts. In NHTSA's proposed upgrade to FMVSS No. 213, the Q3s could be used to test forward-facing and rear-facing CRSs. The sled system proposed for use by NHTSA would position the dummy for a left side impact when testing forward-facing CRSs, and for a right side impact when testing rear-facing CRSs. The PADI manual describes the steps to convert the instrumentation from a left to a right side impact.

b. Instrumentation

Table 1 contains a list of instrumentation needed to qualify the Q3s, i.e., the instrumentation needed for the dummy to meet the qualification requirements included in the proposed subpart W. Note that the FMVSS No. 213 side impact test that NHTSA is considering focuses on measuring head acceleration, using the three uni-axial accelerometers at the head center of gravity (C.G.), and chest deflection, using the IR–TRACC in the thorax. Nonetheless, the other instrumentation listed in the table would be needed for the qualification test to assess the performance of significant parts of the dummy and to ensure the soundness of the dummy as a whole. The Q3s accepts additional instrumentation other than that listed below, such as angular rate sensors in the dummy's head.

TABLE 1—REQUIRED INSTRUMENTATION TO QUALIFY THE Q3S DUMMY UNDER PART 572

Location	Measurement	Instrument
Q3s head C.G.	Acceleration	Accelerometer (3 req.).
Q3s upper neck	Forces and moments	Load cell.
Q3s thorax	Deflection	IR–TRACC.
Q3s shoulder	Deflection	String potentiometer.
Q3s lumbar spine	Forces and moments	Load cell.
Q3s pubic symphysis	Force	Load cell.
Qualification test equipment	Neck, lumbar rotation	Angular rate sensor (2 req.).

IV. Biofidelity

a. Anthropometry

The anthropometry and dummy segment mass properties of the Q3s were defined in the early design stage of the original Q3 based on TNO's data in its *C*hild *An*thropometric *Dat*abase (CANDAT).[18] For the most part, the same anthropometry and mass distributions have been retained all the way through to the Build Level D production version of the Q3s. The Q3s represents a 50th percentile three-year-old child, based on the data derived from CANDAT.

Biofidelity targets for a particular dummy are a function of its anthropometry and mass. Our assessment of the Q3s made use of biofidelity targets derived by SAE. These response targets were derived specifically for side impact dummies that have the same characteristic dimensions and masses as the Hybrid III family of dummies. Unlike the TNO studies used for the Q3s, the anthropometric basis of the Hybrid III three-year-old child dummy was derived by SAE using survey data of children in the United States only (Irwin and Mertz, 1997).[19] SAE also used slightly different assumptions to specify the body segment mass properties. Nonetheless, the SAE specifications for the anthropometry and mass of a three-year-old are very similar to those based on CANDAT. The Q3s generally matches up with SAE specifications as well as it does with CANDAT specifications.

[18] According to TNO publications (Beusenberg et al., 1993; Van Ratingen, et al., 1997), CANDAT is built upon various anthropometry surveys conducted in the United States, the Netherlands, Germany, and Japan from 1970–1993 of external dimensions and overall mass of children from birth up to 18 years old. Each survey source examined a different age group, and each had its own set of unique collection parameters. To handle gaps and inconsistencies within the source data, TNO applied regression routines and interpolation techniques to derive the anthropometry of a particular body segment size as a function of age or total body mass. Regression was based on the assumption that growth is a smooth and continuous process. The anthropometry surveys identified by TNO as the basis of CANDAT were performed by organizations other than TNO. CANDAT is the property of TNO and Humanetics.

[19] Irwin and Mertz (1997). Biomechanical Basis for the CRABI and Hybrid III Child Dummies. Stapp Car Crash Journal V41: 1–12, SAE International, Warrendale, PA.

There are small differences in body segment mass properties between the two ATDs due to differences in the manner in which TNO and SAE apportioned the segments. For instance, the TNO torso does not include parts of the thighs, whereas the SAE target does (the HIII–3C's thighs are included in a sitting form pelvis consistent with other Hybrid III dummies, which are built with a one-piece vinyl covering that fits around the pelvis and extends mid-thigh). Since the Q3s is not constructed in this way, its torso mass is lower than the SAE target because it includes only the torso, not part of the thighs. Conversely, the Q3s thigh mass is higher than the SAE target, since it includes more of the thigh segment.

The total body mass of the Q3s matches that of the HIII–3C, and is very close to the most recent Centers for Disease Control (CDC) growth charts.[20]

Table 2, below, provides the anthropometry and mass of various body segments for the Q3s along with the reference specifications of both CANDAT (TNO) and SAE. For reference, CDC data for height and total mass are footnoted in the table. (Note that, unlike the erect posture of CDC subjects, the reference posture of the Q3s is reclined and the pelvis angle reflects a child's seating position in a CRS. Also, the neck of the Q3s is angled such that the head is leveled when the dummy is seated. Thus, the Q3s height measurement is an approximation only because the dummy cannot be positioned in the same fully erect posture taken by children when their height is measured.)

The TNO and SAE specifications for anthropometry appear essentially the same. The anthropometry of the Q3s is also close to these specifications, with the exception of the chest depth and the waist circumference (both larger in the Q3s). As compared to a human, the Q3s torso is more rounded in order to provide greater internal space for the installation of the IR–TRACC. When struck laterally, the rounded torso also helps to give the dummy a biofidelic response in terms of the force needed to achieve proper chest deflection. For the waist, the difference reflects the seated reference posture of the Q3s as compared to the standing posture of children represented in CANDAT.

When comparing mass, Table 2 shows that the Q3s head is close to the TNO target, but it is light in comparison to the SAE target. For the neck, the Q3s also is aligned with the TNO target, but is light in comparison to the SAE. As discussed in the section below, these differences in anthropometry specifications are not significant in terms of the biofidelity of the Q3s under impact loading.

The other body segment masses shown in Table 2 (in italics) do not reflect a one-to-one comparison because of differences in apportioning. We note also that the mass of the upper extremities is lighter than the SAE value to compensate for the cumulative excess mass of the other dummy segments, to enable the total mass of the Q3s to be on target.

TABLE 2—Q3S ANTHROPOMETRY AND MASS COMPARED TO TNO AND SAE TARGETS

ANTHROPOMETRY (mm)	TNO	SAE	Q3s	% Difference, Q3s vs. SAE
*Standing height**	954	953	986	+3
Sitting height	551	546	556	+2
Shoulder height, sitting	340	334	340	+2
Shoulder breadth (max)	246	246	247	0
Hip breadth (seated)	194	193	202	+5
Head depth	177	177	180	+2
Head breadth	134	135	138	+2
Head circumference	500	498	502	+1
Chest breadth	161	173	174	+1
Chest depth	122	122	151	+24
Chest circumference, axilla	508	505	523	+4
Waist circumference	475	480	521	+9
Thigh height, sitting	78	84	86	+2
Buttock-knee length	293	284	305	+7
Shoulder-elbow distance	190	193	186	−4
Elbow to tip of finger	250	254	240	−6
MASS (kg)				
Total mass**	14.5	14.5	14.26	−2
Head	2.90	3.05	2.81	−8
Neck	0.30	0.40	0.31	−23
Torso assembly	6.20	6.61	5.78	−13
Upper extremities	3.50	1.82	1.41	−22
Lower extremities	1.50	2.63	3.55	+35

* Comparable reference: CDC 2000, 50th percentile three-year-old, standing fully erect:
boys: height=950 mm; total mass=14.3 kg
girls: height=940 mm; total mass=13.8 kg
**Total mass of Q3s includes its body suit, 0.40 kg.

[20] CDC growth charts for year 2000 are reported by Kuczmarski RJ, et al. (2002), 2000 CDC growth charts for the United States: Methods and development. National Center for Health Statistics.Vital Health Stat 11(246), 2002.

b. Biofidelity Assessment Under Dynamic Loading

Our assessment of the Q3s is based primarily on biofidelity targets established by SAE [21] for the head, neck, shoulder, thorax, and pelvis of a three-year-old. (A biofidelity target is the desired performance that a dummy should attain to be considered replicating the biomechanical response of a human.) In addition, we assessed the Q3s against additional shoulder targets based on tests carried out at Ohio State University (Bolte, 2003),[22] and against abdominal targets formulated by TNO.[23] For the most part, the biofidelity targets are based on pendulum impacts to body segments using cylindrical test probes suspended by wire.

Scaling of Adult Human Response Data

Biofidelity targets are based on observed human responses to impact loading. Generally, to assess a dummy's biofidelity, the human's response characteristics must be known. To assess adult dummies, adult post mortem human subjects (PMHS) are exposed to controlled forces, loads, and impacts and their responses are measured. However, biomechanical response data on children under impact loading is nonexistent or very limited, so other means must be used to estimate the human child's response characteristics.

Scaling adult PMHS data to the child's size using mass, anthropometry, and stiffness ratios represents the best available method of estimating the human child's response characteristics (see Irwin and Mertz, 1997 and Irwin, 2002, for details on the scaling theory and assumptions applied by SAE). Thus, scaling techniques were used to derive a set of biomechanical targets for the Q3s whereby adult PMHS data were scaled to a three-year-old child. The targets were determined by scaling the biomechanical responses observed for various body segments of the midsize adult male down to a three-year-old.

Given the lack of pediatric biomechanical data and the many assumptions made in the scaling process, there is greater uncertainty associated with child biofidelity targets compared to the adult targets from which they were derived. Therefore, NHTSA does not consider the biofidelity targets applied herein to be strict prerequisites to accept the dummy. Although biofidelity targets are central to evaluating the dummy, we have had to carefully analyze the findings to assess the biofidelity of the child ATD, judging, among other factors, the extent to which the child ATD met or missed the scaled target, and whether this would affect the usefulness of the ATD in its intended application.

Q3s Biofidelity Assessment

The agency has prepared a supporting document, ''Biofidelity Assessment of the Q3s Three-Year-Old Child Side Impact Dummy (July 2012),'' which provides a detailed discussion of the agency's biofidelity assessment, which is summarized below. A copy of the report has been placed in the docket for this NPRM. The report discusses the performance of the Q3s relative to the biofidelity targets.

A body part-by-body part synopsis of the biofidelity performance of the Q3s under dynamic loading is given below. For pendulum impacts, biofidelity is generally assessed as ''external'' or ''internal.'' External biofidelity is related to the force generated on the face of a pendulum impact probe upon striking a subject. In other words, probe forces generated by dummies are compared against probe forces generated by PMHS. Internal biofidelity is related to a measurement on or within the subject itself, such as shoulder deflection or spine acceleration, for which corresponding measurements are made on both the PMHS and the dummy.

Head

Given that the use of the Q3s in the FMVSS No. 213 side impact test under consideration would be to measure risk of head injury (using a linear acceleration-based head injury criterion, HIC), we consider head biofidelity to be highly important for the ATD. For the Q3s, we assessed head biofidelity in both frontal (Irwin and Mertz, 1997) and lateral (Irwin, 2002) orientations using Part 572-style head drop procedures. The responses of the Q3s head are well within the SAE corridors for both frontal and lateral drops, i.e., the responses wholly met the biofidelity target for the head.

Neck

The behavior of the neck in lateral flexion affects the overall motion of the head. We tested the Q3s neck to lateral flexion according to the SAE protocol (Irwin, et al., 2002), which uses a standard Part 572 neck pendulum to observe the moment-angle relationship. The Q3s neck response is entirely within the SAE corridors, completely meeting the biofidelity target.

We also assessed the biofidelity of the Q3s neck in frontal flexion (Irwin and Mertz, 1997). In the frontal flexion assessment, we found that the Q3s neck data generally follows the shape of the corridor of the biofidelity target, although the curve is not completely contained within the corridor. Given that neck flexion occurs mainly in the lateral direction under the intended use of the dummy, a slight nonconformity in frontal flexion is not disconcerting. On balance, we find the biofidelity of the Q3s neck to be satisfactory for use in our CRS side impact safety standard under consideration.

Shoulder

Although there is no shoulder IARV being contemplated for the Q3s, the shoulder does interact with the CRS during the test procedure under consideration for FMVSS No. 213. In view of this, NHTSA evaluated the biofidelity of the Q3s shoulder in component testing under the loading of a pendulum.

The unpadded test involved the SAE protocol (Irwin, 2002), which uses a rigid pendulum in a pure lateral direction. Response criteria included corridors for lateral shoulder displacement and for probe force. The Q3s shoulder showed high stiffness with respect to lateral shoulder displacement and probe force under this test protocol.

Next we reexamined shoulder biofidelity under conditions that correspond more closely to the intended use of the Q3s in the FMVSS No. 213 test procedure being contemplated: Those of the Ohio State protocol (Bolte et al., 2003), which uses the same impactor mass and speed as the SAE test but with foam padding attached to the impactor face. The latter condition was considered because the FMVSS No. 213 impact being contemplated exposes the Q3s to the padded side structure

[21] NHTSA has evaluated the SAE targets and is satisfied with the technical bases underlying them. The SAE targets were derived systematically using a defined process. The scaling theories as well as the underlying anthropometric and biomechanical test data have all been vetted and released to the public domain. SAE methods have been used by NHTSA to assess the biofidelity of the majority of Part 572 ATDs and we find them to be sound, data-driven, and well-founded scientifically.

[22] The test procedure and biofidelity targets are described in: Bolte JH, Hines NH, Herriot RG, Donnelly BR, McFadden JD (2003). Shoulder impact response and injury due to lateral and oblique loading, Stapp Car Crash Journal, V47, SAE International, Warrendale, PA.

[23] We have used this TNO biofidelity target because there is none for the Q3s abdomen developed by the SAE. We have not used the TNO biofidelity targets for the head, neck, shoulder, thorax, and pelvis because they are derived from assumptions and underlying data within CANDAT, some of which have not been made fully accessible to the public. Thus, due to the transparency and reliability of the SAE targets and because the TNO targets cannot be fully judged to the same degree that SAE targets can be, we have decided to use primarily the SAE targets in assessing the biofidelity of the Q3s.

(''wing'') of the child restraint in the test.

Under the Ohio State protocol, test results also indicate that the shoulder of the Q3s is stiff when assessed for biofidelity as measured by its internal deflection. However, the force response of the padded probe (external biofidelity) nearly matches the target. As such, the Q3s shoulder appears to be biofidelic in the manner in which it would exert force on the child restraint system. This loading of the child restraint, which would affect the overall motion of the dummy's upper torso and head (through which the FMVSS No. 213 injury criteria under consideration would be measured), appears representative of an actual human.

Thorax

The biofidelity of the thorax under lateral loading is an important performance target for the Q3s since the agency is considering a proposal to adopt thorax deflection as an injury assessment reference value (IARV) in the FMVSS No. 213 side impact test. Thorax biofidelity is assessed via high (6.0 m/s) and low (4.3 m/s) speed pendulum impacts prescribed by SAE. Pendulum force corridors are used to assess the external biofidelity of the dummy, and upper torso (T1) acceleration is used to assess internal biofidelity. (SAE did not develop a biofidelity target based on thorax deflection because PMHS in the underlying tests were not instrumented as such.)

Test results indicate that the pendulum forces generated by the Q3s are within the corridors for both high and low speed tests. The magnitude of the internal T1 acceleration is also on target, though it is slightly out of phase with the biofidelity corridor (i.e., the peak magnitude is within the limit afforded by the corridor, but it occurs about 10 ms too early). We believe this phase difference, which is related to the mechanics of human thoracic tissues vs. the Q3s polymer thorax, is an acceptable compromise in producing a dummy that is affordable, durable, and otherwise practicable for use as a regulatory tool.

Abdomen

We assessed the biofidelity of the abdomen in an oblique pendulum impact using probe force targets established by TNO. This assessment was carried out with the probe striking the antero-lateral aspect of the dummy rather than the full lateral aspect because neither TNO nor SAE had established biofidelity targets for the latter. Furthermore, abdominal biofidelity is important mostly in frontal impacts in relation to lap belt loading. Since the Q3s would primarily be used in side impacts to test CRSs having an internal harness, abdominal loads are not expected to be excessive. Nonetheless, the loading to the abdomen in the FMVSS No. 213 testing under consideration may have some frontal component, with the resultant loading being oblique. Therefore, the biofidelity assessment was performed with an oblique impact. The Q3s performed very favorably when examined against the TNO established targets.[24]

Moreover, noting that an assumption was made by TNO that the child abdomen is stiffer than the adult, NHTSA re-formulated the corridor by assuming that abdomen stiffness is a function of the elastic modulus of soft tissue, and that child and adult moduli are the same. (This assumption was also employed in developing the SAE corridors for other body regions.) When compared against the re-formulated corridor, the Q3s performs a little less favorably, but still follows along the upper bound of the corridor. Details of this comparison are provided in our supporting document, ''Biofidelity Assessment of the Q3s Three-Year-Old Child Side Impact Dummy,'' supra at p. 17.

Pelvis

The external biofidelity of the pelvis was assessed using an SAE pendulum impact protocol (lateral impact of 2.27 kg rigid impact probe at 4.5 m/s) and pendulum force limits. The test results indicate that the Q3s pelvis appears stiff relative to a child. The dummy had been redesigned with hardened aluminum hips replacing plastic ones to improve its durability, and this change may have resulted in a greater force response. Nonetheless, in our repeatability and reproducibility testing with Cozy Cline CRSs (discussed later), the wide scatter in pelvis response did not seem to have any effect on HIC15 and chest deflection. Further, the tradeoff in biofidelity for improved durability may be necessary for use of the dummy in a regulatory environment.

[24] The TNO targets are based on a scaling of adult PMHS data in which subjects were struck in the abdomen by a pendulum aligned 30 degrees from lateral (i.e., an oblique impact). The PMHS data is from a test series where subjects initially underwent thoracic impacts and then were re-used for abdominal impacts. The thoracic impact data were used to establish thorax corridors in the ISO 9790 Technical Report, the underlying source document upon which the SAE three-year-old targets have been derived. The repeat abdominal tests, however, were not used by ISO and thus no SAE targets are provided for abdominal biofidelity subjected to pendulum impacts.

Summary

Our biofidelity assessment of the Q3s is based on head drops and pendulum tests, which have demonstrated the biofidelity of the test dummy. Our test results indicate that the biofidelity of the Q3s is most satisfactory for the head, thorax, and neck. It is in these three body segments where proper biofidelity is most critical for the intended use of the dummy in the FMVSS No. 213 test procedure under consideration.

Relative to humans, the dummy appears to be stiff in the shoulder and pelvis. For a CRS under test, the shoulder and pelvis could conceivably act as load paths such that the thorax deflection in the Q3s may be unrealistically low relative to a human. However, it may not be feasible to engineer a biofidelic design into the shoulder and pelvis at this time without sacrificing some other critical performance features, such as durability. While a child test dummy with a more biofidelic shoulder and pelvis may be developed in the future, the agency tentatively concludes that the Q3s is a suitable and valuable test device for use in child restraint side impact testing at this time. On balance, the agency is satisfied with the overall biofidelity of the Q3s.

V. Repeatability and Reproducibility

A test dummy's repeatability and reproducibility (R&R) is demonstrated in sled tests and component tests. Sled tests establish the consistency of the dummy's kinematics, its impact response as an assembly, and the integrity of the dummy's structure and instrumentation under controlled and representative crash environment test conditions. In component tests, the impact input as well as the test equipment is carefully controlled to minimize external effects on the dummy's responses. NHTSA has assessed the repeatability and reproducibility of the Q3s in CRS side impact sled tests and in component tests.

Repeatability is defined as the similarity of responses from a single dummy when subjected to multiple repeats of a given test condition. Reproducibility is defined as the similarity of test responses from multiple dummies when subjected to multiple repeats of a given test condition. A quantitative assessment of R&R is achieved using a statistical analysis of variance. The percent coefficient of variation (%CV) is a measure of variability expressed as a percentage of the mean. The %CV is calculated as follows:

$$\%CV = \frac{\sigma}{\overline{X}} \times 100$$

Where σ = standard deviation of responses [25]
$\overline{X}$ = mean of responses

We have used a %CV scale shown in Table 3 to assess the quality of repeatability and reproducibility of the Q3s. This approach was first introduced by NHTSA as a means of evaluating dummy repeatability when the original subpart B Hybrid II 50th percentile male ATD was proposed (40 FR 33466, August 8, 1975). Since then, the agency has used this approach for other 49 CFR Part 572 rulemakings, including those to adopt side impact dummies such as the ES–2re midsize adult male side impact dummy (subpart U, 71 FR 75304, December 14, 2006) and the SID–IIs 5th percentile adult female side impact dummy (subpart V, 71 FR 75342, December 14, 2006).

TABLE 3—%CV SCORE CATEGORIZATION FOR REPEATABILITY AND REPRODUCIBILITY

Repeatability % CV Score	Reproducibility % CV Score	Assessment
%CV ≤ 5	%CV ≤ 6	EXCELLENT.
5 < %CV ≤ 8	6 < %CV ≤ 11	GOOD.
8 < %CV ≤ 10	11 < %CV ≤ 15	MARGINAL.
%CV > 10	%CV > 15	POOR.

For repeatability and reproducibility assessments, acceptable limits are ''MARGINAL'' and above. For repeatability, the MARGINAL limit is set at a %CV value of 10 percent. For MARGINAL reproducibility, a slightly greater %CV of 15 percent is used since multiple dummies produce a wider dispersion of response measurement than in testing a single dummy for repeatability. These limits were most recently used in adopting the HIII–10C 10-year-old child dummy into 49 CFR Part 572 (subpart T, 77 FR 11651, February 27, 2012). All R&R values in the ''POOR'' category were investigated to assess the cause of the high variance. If needed, corrective measures were made to the dummy.

a. R&R in Sled Tests

In the sled tests, a CRS was mounted on a generic bench seat which was allowed to slide into a padded wall, generating lateral impact loading on the CRS and the Q3s dummy. The deceleration pulse of the sliding bench seat was controlled by the crush of aluminum honeycomb. The peak lateral acceleration of the test buck was approximately 25.4 g and the peak velocity was 31.4 km/h (19.5 mph).[26] The configuration and sled pulse generally corresponded to the procedure under consideration for the FMVSS No. 213 side impact test, except the loadwall had a uniform surface.

To assess the R&R of the Q3s in sled tests, two dummies were each tested five times using the sliding seat sled buck. The simulated wall padding was replaced after each test. Two sets of seat padding for the sliding bench were alternated after each test. The locations of multiple dummy landmarks were measured before each test to minimize test-to-test variation in the dummy's seated position.

All tests were performed with identical forward-facing Graco Cozy Cline child restraints, with a new child restraint used for each test. These child restraints were sold for children weighing 9 to 18 kg (20 to 40 lb). In CRS tests performed in support of NHTSA's proposed rulemaking to add a side impact test to FMVSS No. 213, the Cozy Cline child restraint produced Q3s metrics that were generally high relative to those produced by other CRSs. Thus, we chose to evaluate the R&R of the Q3s with the Cozy Cline child restraint because the data indicated that these child restraints more vigorously exercised the dummy's assessment of the injury criteria of interest compared to other CRSs we have tested.

The sled test results indicated ''GOOD'' to ''EXCELLENT'' repeatability and reproducibility.[27] The statistical analysis of select measurements in all tests for each dummy and both dummies combined is summarized in Table 4. NHTSA has prepared and docketed a technical report, ''Evaluation of the Q3s Three Year Old Child Side Impact Dummy: Repeatability, Reproducibility, and Durability (2012),'' which discusses the test procedures and results in greater detail. The report also provides references for the location of the test data including sensor signals and videography.

TABLE 4—SUMMARY OF SLED TEST RESPONSES FOR SELECT CHANNELS

Used for:	Parameter	Dummy S/N 006			Dummy S/N 007			Combined Data		
		Avg	Std dev	% CV	Avg	Std dev	% CV	Avg	Std dev	% CV
FMVSS [1]	HIC15	700	14.8	2	708	19.4	3	704	16.8	2
P572 [2] & FMVSS [1]	Thorax Y-Disp, mm	34	0.8	2	33	2.8	9	34	2.0	6
Part 572 [2]	Head Res-Accel, g	97	2.1	2	96	2.0	2	96	2.0	2
R&D [3]	Neck Y-force, N	744	56.5	8	687	57.3	8	716	61.4	9
Part 572 [2]	Neck X-Moment, Nm	31	3.8	12	28	2.3	8	29	3.4	12
Part 572 [2]	Shoulder Y-Disp, mm	24	1.0	4	24	0.8	3	24	0.8	4
R&D [3]	Up spine Res-Accel, g	65	3.3	5	65	8.2	13	65	5.9	9
R&D [3]	Lumbar Y-Force, N	324	20.7	6	343	38.8	11	333	31.0	9
R&D [3]	Pelvis Res-Accel, g	101	15.8	16	106	22.9	22	104	18.7	18

[25] Standard deviations are based on a sample and calculated using the ''n-1'' method.

[26] The acceleration of the test buck is intended to mimic the impulse experienced by a CRS installed in the rear seat of a small passenger vehicle subjected to a side impact by a moving deformable barrier as specified in FMVSS No. 214, ''Side impact protection.''

[27] Qualification tests were performed on each dummy before and after the sled test series to evaluate the Q3s's durability. The dummies met all of the preliminary qualification response requirements, both before and after the sled series.

TABLE 4—SUMMARY OF SLED TEST RESPONSES FOR SELECT CHANNELS—Continued

Used for:	Parameter	Dummy S/N 006			Dummy S/N 007			Combined Data		
		Avg	Std dev	% CV	Avg	Std dev	% CV	Avg	Std dev	% CV
Part 572 [2]	Pubic Y-Force, N	388	43.4	11	324	75.5	23	356	67.1	19

[1] CRS requirement under consideration for a FMVSS No. 213 side impact test.
[2] Qualification for proposed Part 572.
[3] Injury assessment for research and development (R&D) only.

The following discusses the sled test results that relate to responses of primary importance to the dummy's use in side impact, i.e., primarily measurements under consideration for use in the FMVSS No. 213 side impact test, and measurements that would serve as Part 572 qualification targets. Other measurements commonly examined in research efforts are also discussed below.

Head Acceleration and HIC15

As seen in Table 4, head acceleration and HIC15 both displayed ''EXCELLENT'' repeatability and reproducibility. Since these responses are being considered as injury criteria for our CRS side impact requirements, we believe it is very important for these responses to exhibit a high degree of repeatability. It is notable that the average HIC15 value was 704. This value exceeds the IARVs under consideration for our CRS requirements, thus demonstrating that the dummy has very good R&R up to and beyond the expected pass/fail limit.

Thorax Deflection

Thorax deflection (labeled ''Thorax Y-Disp'' in Table 4), as measured by the IR–TRACC, also displayed ''EXCELLENT'' reproducibility when the responses of both dummies were combined. The average measurement of 34 mm exceeds the IARVs under consideration for our CRS requirements, which attests to the reliable performance of the dummy at pass/fail limits.

We note that for dummy serial number 007, the thorax y-displacement is only ''MARGINAL.'' Closer inspection of the lateral thorax displacement data indicates that the response for one of the tests was quite different than that of the previous four tests. Our review of the pre-test positioning data revealed that in test 5, the dummy's elbow location relative to other body landmarks was farthest away from the average location. We believe that the elbow position relative to the dummy's torso played a critical role in the amount of subsequent lateral thorax displacement. Because these data show an apparent sensitivity to elbow positioning, the agency has developed a procedure to position the elbow at a specific angle relative to the thorax.

Neck Y-Force and X-Moment

Neck Y-force and X-moment responses exhibited ''GOOD'' and ''MARGINAL'' reproducibility, respectively. A closer inspection of the data indicates that the peak neck force in one of the tests for dummy serial number 006 was about 40 percent lower than the other four tests, for reasons that could not be determined by the test technicians. If test 3 were removed from the dataset, the repeatability of dummy 006 for neck X-moment becomes ''EXCELLENT'' and the overall reproducibility becomes ''GOOD.''

Shoulder Y-Displacement

The shoulder displacement, as measured by the Q3s's internal string potentiometer, also displayed ''EXCELLENT'' repeatability in both dummies as well as in its overall reproducibility when the responses of both dummies are combined. Although there is no IARV associated with shoulder displacement, the average measurement of 24 mm is fairly high in comparison to the values obtained in research tests from other tested CRSs. Again, this attests to the good performance of the dummy in conditions beyond those to which the ATD will typically be exposed in an FMVSS No. 213 compliance test.

Upper Spine Acceleration

The overall reproducibility of both dummies combined was ''GOOD,'' although the upper spine resultant acceleration for dummy 007 displayed ''POOR'' repeatability. However, as with the lateral thorax displacement responses, the upper spine acceleration for test 5 of dummy 007 was anomalous as compared to the previous four tests. We believe that this result is related to the issue of arm position. We note that if test 5 were removed from the dataset, the ''POOR'' repeatability of dummy 007 for upper spine acceleration becomes ''EXCELLENT'' and the overall reproducibility also becomes ''EXCELLENT.''

Pelvis Resultant-Acceleration, Lumbar Y-Force, and Pubic Y-Force

Poor repeatability was observed in the pelvic and lumbar responses. Pelvis resultant acceleration response curves revealed a sharp spike in the data around 90 ms. These spikes obscured the true data peaks, which occurred around 85 ms, and therefore present a negative effect on the repeatability analysis. A similar spike, of lesser magnitude, was evident in the lumbar Y-force responses, also around the 90 ms mark of the event.

The source of the data spikes were subsequently determined by NHTSA to emanate from ''knee knock.'' The dummy's knees are hard plastic components, and they contacted each other precisely at the instant that the spikes occurred in the pelvis acceleration and lumbar Y-force channels. This condition has since been mitigated in the final Q3s design which incorporates a padded covering over the medial aspect of the knees to dampen the force of impact.

The repeatability of the pubic Y-force measurement was also shown to be ''POOR.'' This rating is not attributed to the knee knock condition. Rather, pubic Y-force appears to be a measurement that is highly sensitive to any variation in the test conditions. Nonetheless, variations in pubic Y-force do not appear to affect the dummy's head acceleration and thorax Y-displacement (the IARVs we are exploring for the FMVSS No. 213 side impact test under consideration), which exhibited low variability despite the scatter in pubic force.

Supplemental Tests

In consideration of the ''MARGINAL'' performance observed for some of the responses in the previous sled test series, we ran another series of Cozy Cline tests with the final version of the Q3s. The final Q3s incorporated the aforementioned pads on the medial surfaces of the knees as well as a simplified design of the neck center cable. The older cable design was

thought to contribute to the non-uniformity observed in the earlier sled tests. Additionally, we added a padded door panel and positioned the arm at 25 degrees to be more consistent with what is under consideration for the proposed side impact test protocol.

The results for this supplemental test series are shown in Table 5. As compared to the previous set of tests shown in Table 4, the supplemental series demonstrate improved repeatability in measurements of shoulder and thorax deflection, neck loads, and pelvis acceleration. These improvements are directly related to a new arm positioning protocol, the revised neck center cable, and the elimination of knee knock, respectively.

Pubic force repeatability was again rated as ''POOR.'' Since the revisions to the dummy and test protocol were not aimed at improving this measure, the ''POOR'' rating was not unexpected.

TABLE 5—SUMMARY OF SUPPLEMENTAL SLED TEST RESPONSES FOR SELECT CHANNELS

Used for:	Parameter	Dummy S/N 004		
		Avg	Std dev	% CV
FMVSS [1]	HIC15	795	22.2	3
P572 [2] & FMVSS [1]	Thorax Y-Disp, mm	17.8	0.7	4
Part 572 [2]	Head Res-Accel, g	110	3.6	3
R&D [3]	Neck Y-force, N	630	42	7
Part 572 [2]	Neck X-Moment, Nm	28.0	1.9	7
Part 572 [2]	Shoulder Y-Disp, mm	24.3	0.5	2
R&D [3]	Up spine Res-Accel, g	129	6.8	5
R&D [3]	Lumbar Y-Force, N	765	69	9
R&D [3]	Pelvis Res-Accel, g	97.1	8.5	9
Part 572 [2]	Pubic Y-Force, N	557	118	21

[1] CRS requirement under consideration for a FMVSS No. 213 side impact test.
[2] Qualification for proposed Part 572.
[3] Injury assessment for research and development (R&D) only.

b. R&R in Component Qualification Tests

Test dummies specified in 49 CFR Part 572 are subjected to a series of qualification tests to ensure that their components are functioning properly. The qualification tests proposed for the Q3s are discussed further in a later section. We have proposed qualification tests for the dummy's head, neck, shoulder, thorax, lumbar, and pelvis, assessing 35 response mechanisms for the dummy.

We tested NHTSA's four Q3s units to the proposed qualification tests, assessing among other matters the performance of the units when tested to the qualification tests, and the repeatability and reproducibility of the dummies. The findings are discussed in the technical report, ''Evaluation of the Q3s Three Year-Old Child Side Impact Dummy: Repeatability, Reproducibility, and Durability,'' *supra.*

R&R in the component qualification tests were assessed by testing the four Q3s dummies, all conforming to the latest available revision level. Tests were run for both right and left side impacts. Average, standard deviation, and coefficient of variation were computed for each required measurement parameter of each qualification procedure. We used the same guidelines to rate R&R as was used previously in our R&R evaluation using sled tests (see Table 3, *supra*).

Head Drop Tests

Head qualification consisted of two test components: Frontal and lateral head drops. The frontal head drop was conducted from a height of 376 mm, while the lateral head drop was conducted at 200 mm.

Four Q3s dummy heads were each subjected to six frontal head drops, five left-side lateral drops, and five right-side lateral drops. The responses are summarized in Table 6 for frontal drops and in Table 7 with left- and right-side tests combined. Each individual head was rated as having ''EXCELLENT'' repeatability in both the frontal and lateral modes. When combining the responses, the reproducibility of all four heads was also rated as ''EXCELLENT'' in both the frontal and lateral test modes.

TABLE 6—SUMMARY OF FRONTAL HEAD DROP RESPONSES

Dummy S/N		Resultant accel (g)
004	avg	273.0
	stdev	3.86
	%CV	1.41
006	avg	276.5
	stdev	2.48
	%CV	0.90
007	avg	282.0
	stdev	4.35
	%CV	1.54
008	avg	263.5
	stdev	5.12
	%CV	1.94
All	avg	273.8

TABLE 6—SUMMARY OF FRONTAL HEAD DROP RESPONSES—Continued

Dummy S/N		Resultant accel (g)
	stdev	7.68
	%CV	2.80

TABLE 7—SUMMARY OF LATERAL HEAD DROP RESPONSES

Dummy S/N	Orientation L&R	Resultant accel (g)
004	Avg	131.3
	Stdev	3.50
	%CV	2.67
006	Avg	124.7
	Stdev	3.64
	%CV	2.92
007	Avg	127.1
	Stdev	3.92
	%CV	3.08
008	avg	123.2
	stdev	4.08
	%CV	3.31
All	avg	126.6
	stdev	4.78
	%CV	3.78

Neck Pendulum Tests

Flexion Tests. The two flexion tests utilized the Part 572 neck pendulum and a headform designed to mimic the inertial properties of the head (Part 572, Subpart E, Figure 22). The frontal flexion test was at a 4.7 m/s impact speed and the lateral test was at a 3.8 m/s speed. Both tests prescribed a deceleration pulse. For the frontal

flexion tests, four Q3s dummy necks were subjected to five tests. For lateral flexion, each of the four necks was subjected to five left-side tests and five right-side tests.

The responses are summarized in Table 8 (frontal flexion) and Table 9 (lateral flexion). For the frontal flexion and lateral flexion tests, each individual neck provided ''EXCELLENT'' repeatability for all criteria considered. Reproducibility was also ''EXCELLENT'' for all four necks combined.

Neck Torsion. During CRS testing, the Q3s neck may flex with varying degrees of neck twist. We have therefore developed a procedure to assure that the neck is repeatable under twist. The new neck torsion test uses a special test fixture attached to the Part 572 pendulum, which imparts a pure torsion moment to the isolated neck. The test specifies a 3.6 m/s impact speed with a defined deceleration pulse. Each of the four Q3s dummy necks was subjected to five left-side tests and five right-side tests. The responses are summarized in Table 10 with left- and right-side tests combined. Each individual neck provided ''EXCELLENT'' repeatability for all criteria considered. Reproducibility was also ''EXCELLENT'' for all four necks combined.

TABLE 8—SUMMARY OF FRONTAL FLEXION NECK PENDULUM TEST RESPONSES

Dummy S/N		Max angle		Peak Y-moment		Head rotation decay time, ms
		angle deg	time ms	moment N-m	time ms	
004	Avg	77.1	58.5	47.1	54.3	52.2
	stdev	0.42	0.62	0.63	1.02	0.10
	%CV	0.55	1.06	1.35	1.88	0.20
006	Avg	77.5	59.3	46.0	56.1	52.2
	stdev	0.74	0.84	1.10	1.89	0.20
	%CV	0.96	1.42	2.40	3.38	0.38
007	Avg	74.3	58.3	46.8	55.7	51.3
	stdev	0.79	0.70	0.71	1.47	0.17
	%CV	1.07	1.20	1.51	2.64	0.34
008	Avg	74.8	57.9	46.9	54.2	51.2
	stdev	0.69	0.65	1.90	1.10	0.23
	%CV	0.92	1.12	4.04	2.03	0.45
All	Avg	76.1	58.7	46.4	55.5	51.7
	stdev	1.77	1.12	1.50	2.00	0.48
	%CV	2.33	1.90	3.23	3.61	0.93

TABLE 9—SUMMARY OF LATERAL FLEXION NECK PENDULUM TEST RESPONSES

Dummy S/N	Orientation L&R	Max angle		Peak X-moment		Head rotation decay time, ms
		angle deg	time ms	moment N-m	time ms	
004	avg	83.3	68.8	28.4	69.5	66.6
	stdev	0.53	0.60	1.48	0.78	0.53
	%CV	0.63	0.87	5.23	1.13	0.79
006	avg	85.2	69.9	28.8	70.6	66.8
	stdev	0.32	0.64	0.82	0.55	0.68
	%CV	0.37	0.91	2.84	0.77	1.01
007	avg	81.0	68.0	27.7	69.4	65.5
	stdev	0.44	0.79	0.59	0.90	0.60
	%CV	0.55	1.16	2.14	1.29	0.92
008	avg	81.7	67.7	27.9	68.8	65.8
	stdev	0.73	0.56	0.71	0.70	0.87
	%CV	0.89	0.82	2.53	1.02	1.32
All	avg	82.8	68.6	28.2	69.6	66.2
	stdev	1.69	1.08	1.05	0.98	0.86
	%CV	2.04	1.57	3.72	1.41	1.30

TABLE 10—SUMMARY OF TORSIONAL NECK PENDULUM TEST RESPONSES

Dummy S/N	Orientation L&R	Max angle		Peak Z-moment		Head rotation decay time, ms
		angle deg	time ms	moment N-m	time ms	
004	avg	84.9	102.3	9.0	96.2	93.8
	stdev	0.39	0.51	0.03	0.82	0.64
	%CV	0.46	0.50	0.28	0.85	0.68
006	avg	89.7	108.4	8.3	102.1	99.0
	stdev	0.53	0.52	0.07	2.03	0.51
	%CV	0.59	0.48	0.84	1.99	0.52
007	avg	80.7	98.7	9.2	90.8	89.8
	stdev	1.22	0.60	0.31	1.39	1.05
	%CV	1.51	0.61	3.35	1.53	1.17

TABLE 10—SUMMARY OF TORSIONAL NECK PENDULUM TEST RESPONSES—Continued

Dummy S/N	Orientation L&R	Max angle		Peak Z-moment		Head rotation decay time, ms
		angle deg	time ms	moment N-m	time ms	
008	avg	81.3	99.3	9.0	91.9	90.9
	stdev	1.50	0.72	0.08	0.78	0.77
	%CV	1.85	0.72	0.84	0.85	0.84
All	avg	84.2	102.2	8.9	95.2	93.4
	stdev	3.71	3.89	0.37	4.64	3.62
	%CV	4.40	3.80	4.21	4.87	3.88

Shoulder Impact

This test assures that the shoulder acts uniformly in the way it deforms under load and distributes the load under a direct lateral impact, thus helping to assure that whole-body kinematics of the ATD are consistent.

Shoulder tests consisted of a lateral impact to the shoulder using a 3.8 kg probe at an impact speed of 3.6 m/s. Each of the four Q3s dummies was impacted five times on both their left and right shoulders. The responses are summarized in Table 11 with left- and right-side tests combined. The shoulder responses for each individual dummy were rated as having ''EXCELLENT'' repeatability. The reproducibility of shoulder responses for all four dummies combined was also rated as ''EXCELLENT.''

TABLE 11—SUMMARY OF SHOULDER TEST RESPONSES

Dummy S/N	Orientation L&R	Shoulder displacement (mm)	Probe force (N)
004	Avg	18.4	1281.5
	Stdev	0.47	27.99
	%CV	2.57	2.18
006	Avg	19.0	1270.3
	Stdev	0.35	12.91
	%CV	1.84	1.02
007	Avg	18.8	1295.0
	Stdev	0.46	13.55
	%CV	2.46	1.05
008	Avg	18.6	1280.1
	Stdev	0.83	10.75
	%CV	4.48	0.84
All	Avg	18.7	1281.7
	Stdev	0.58	19.16
	%CV	3.12	1.50

Thorax Impacts

The thorax qualification tests were conducted two ways: Without arm interaction (as in the SAE test) and with the arm attached and down such that the impact probe strikes the upper arm. Both tests utilized a lateral impact with a 3.8 kg probe.

In the ''thorax without arm'' test, the arm was completely removed from the dummy. The 3.8 kg test probe was aligned with the thorax displacement IR–TRACC and impacted the thorax laterally at a speed of 3.3 m/s. Each of the agency's four dummies was impacted five times on both the left and right sides. Table 12 below provides a summary of the responses with left- and right-side tests combined.

TABLE 12—SUMMARY OF THORAX WITHOUT ARM QUALIFICATION TEST RESPONSES

Dummy S/N	Orientation L&R	Thorax displacement (mm)	Probe force (N)
004	avg	27.3	705.2
	stdev	0.45	15.52
	%CV	1.66	2.20
006	avg	28.6	665.1
	stdev	0.77	27.83
	%CV	2.69	4.18
007	avg	28.1	692.1
	stdev	0.19	22.92
	%CV	0.67	3.31
008	avg	26.3	710.9
	stdev	0.19	19.51
	%CV	0.70	2.74
All	avg	27.6	693.3

TABLE 12—SUMMARY OF THORAX WITHOUT ARM QUALIFICATION TEST RESPONSES—Continued

Dummy S/N	Orientation L&R	Thorax displacement (mm)	Probe force (N)
	stdev	1.00	27.63
	%CV	3.63	3.99

For the ''arm attached'' test, the upper arm was positioned vertically and aligned with the dummy's thorax. The lower arm was positioned to make a 90 degree angle with the upper arm. The impact speed of the probe was 5.0 m/s.

Each of the four test dummies was impacted five times on both the left and right sides. Table 13 provides a summary of the test results with left- and right-side tests combined.

TABLE 13—SUMMARY OF THORAX WITH ARM ATTACHED QUALIFICATION TEST RESPONSES

Dummy S/N	Orientation L&R	Thorax displacement (mm)	Peak probe force after 5 ms (N)
004	avg	26.0	1527.5
	stdev	0.63	28.58
	%CV	2.41	1.87
006	avg	26.3	1567.1
	stdev	0.55	46.47
	%CV	2.09	2.97
007	avg	25.9	1512.7
	stdev	0.37	60.32
	%CV	1.44	3.99
008	avg	25.2	1542.3
	stdev	0.48	45.96
	%CV	1.92	2.98
All	avg	25.9	1537.4
	stdev	0.64	49.28
	%CV	2.46	3.21

For thorax impacts both with and without the arm, each dummy was rated as having ''EXCELLENT'' repeatability. Furthermore, the responses of all four dummies combined produced a rating of ''EXCELLENT'' reproducibility.

Note that the peak probe force was taken after 5 ms to separate the probe's initial inertial response during arm contact from the probe's response due to its interaction with the thorax. The typical probe force response curve exhibited dual peaks of nearly equal magnitude, with the first peak occurring upon initial impact of the probe with the arm and the second peak occurring as the arm loaded the thorax (see Figure 1 below). Analysis of the response curves indicated that the first peak typically occurred before 5 ms, and the second peak occurred after 5 ms. Because the second peak is more closely related to the resistive force of the thorax, we concluded that the first peak was not determinative.

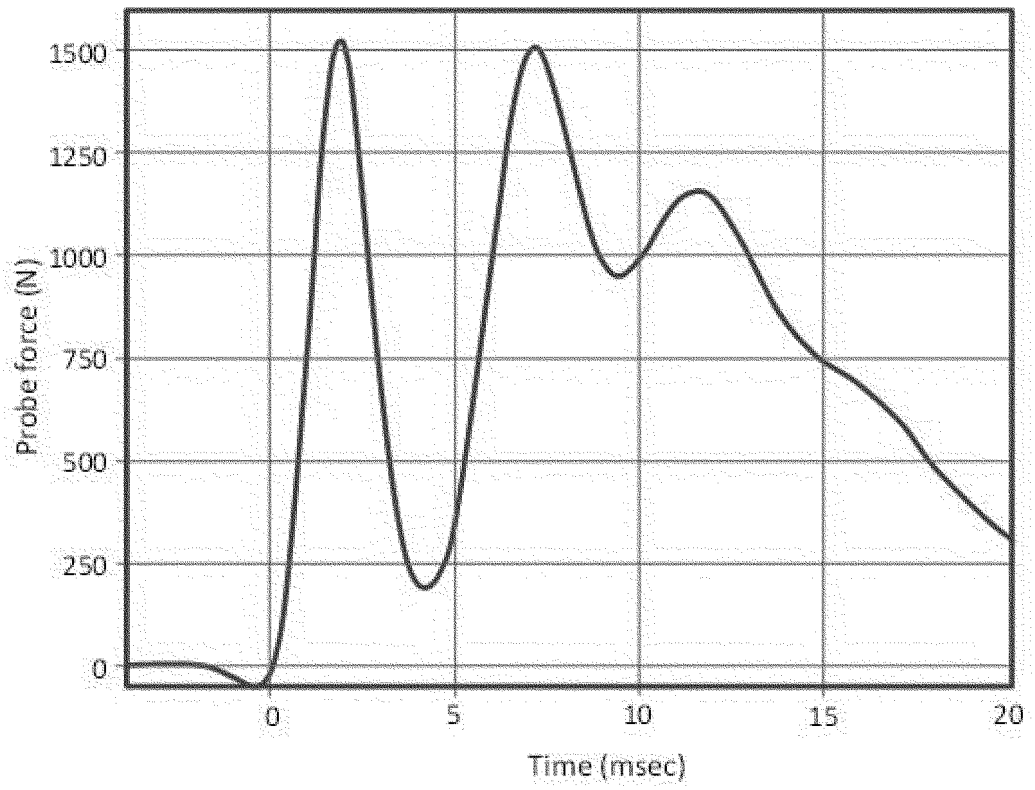

Figure 1. Typical Probe Force Response for Thorax with Arm Impact

Lumbar Pendulum Tests

Lumbar testing consisted of two types of pendulum tests: A frontal test and a lateral test. For both tests, the lumbar spine element containing the flexible column was removed from the dummy similar to the neck qualification tests. Lumbar tests were conducted using the same Part 572 neck pendulum and the headform device utilized in the neck qualification tests. Frontal and lateral tests were conducted at an impact speed of 4.4 m/s.

Five frontal tests were carried out on lumbar elements from each of the four test dummies. For the lateral tests, five were conducted on the left side and five on the right side. The results are summarized in Table 14 (frontal) and Table 15 (lateral) with left- and right-side tests combined. The repeatability of each lumbar element was rated as either ''EXCELLENT'' or ''GOOD'' for all test measurements. The reproducibility of responses of all four lumbar elements combined was ''EXCELLENT'' for all measurements.

TABLE 14—SUMMARY OF FRONTAL LUMBAR PENDULUM TEST RESPONSES

Dummy S/N		Max angle		Peak Y-moment		Head rotation decay time, ms
		angle deg	time ms	moment N-m	time ms	
004	avg	52.8	55.1	84.2	51.2	53.8
	stdev	1.05	0.89	1.46	3.75	0.34
	%CV	1.99	1.61	1.74	7.31	0.63
006	avg	52.5	54.8	87.1	51.4	52.7
	stdev	1.79	0.81	0.85	2.81	0.61
	%CV	3.40	1.48	0.97	5.48	1.15
007	avg	53.4	56.1	84.2	51.4	53.9
	stdev	1.41	0.89	1.38	3.02	0.68
	%CV	2.65	1.58	1.64	5.88	1.26
008	avg	51.4	54.4	88.5	50.8	52.3
	stdev	1.13	0.71	2.21	2.06	0.27
	%CV	2.19	1.31	2.49	4.06	0.52
All	avg	52.5	55.1	86.0	51.2	53.2
	stdev	1.47	0.99	2.39	2.74	0.85
	%CV	2.79	1.79	2.78	5.35	1.60

TABLE 15—SUMMARY OF LATERAL LUMBAR PENDULUM TEST RESPONSES

Dummy S/N	Orientation L&R	Max angle		Peak X-moment		Head rotation decay time, ms
		angle deg	time ms	moment N-m	time ms	
004	avg	52.7	54.3	86.2	50.2	53.4
	stdev	1.58	1.47	2.23	3.75	0.88
	%CV	3.01	2.71	2.59	7.47	1.66
006	avg	53.5	54.6	89.2	51.1	52.8
	stdev	2.05	1.30	3.01	2.38	0.83
	%CV	3.82	2.38	3.38	4.67	1.56
007	avg	51.7	54.5	88.4	52.7	54.8
	stdev	1.75	1.13	2.57	2.74	2.17
	%CV	3.39	2.07	2.91	5.20	3.96
008	avg	54.2	55.6	86.7	51.2	51.6
	stdev	1.51	1.04	3.26	2.29	2.07
	%CV	2.79	1.88	3.76	4.47	4.01
All	avg	53.0	54.7	87.6	51.3	53.1
	stdev	1.93	1.29	2.96	2.89	1.94
	%CV	3.63	2.36	3.38	5.63	3.66

Pelvis Impact

A lateral impact with the 3.8 kg probe at 4.0 m/s was used to test the pelvis. Repeat tests were conducted according to the test procedures described in the technical report, ''Qualification Procedures for the Q3s Child Side Impact Crash Test Dummy,'' *supra.* For each dummy in the evaluation, NHTSA conducted five impacts to both the left and right side of the pelvis. A summary of the test results can be found in Table 16 with left- and right-side tests combined.

The repeatability of each individual dummy's response was rated as ''EXCELLENT'' except for the peak pubic force response of dummy serial number 006, which was rated as ''GOOD.'' For this particular dummy, the pubic force was about 75 N higher for right side impacts than left side impacts. For the other three dummies, the difference was only 50–60 N. Despite the differences, repeatability—when assessed by combining right and left impacts—only fell out of the ''EXCELLENT'' category for dummy serial number 006. When left and right impacts for all dummies were combined, reproducibility was rated as ''EXCELLENT'' for both the peak pubic force and the peak probe force.

TABLE 16—SUMMARY OF PELVIS QUALIFICATION TEST RESPONSES

Dummy S/N	Orientation L&R	Pubic force (N)	Probe force (N)
004	avg	745.3	1651.0
	stdev	31.33	22.78
	%CV	4.20	1.38
006	avg	782.3	1698.9
	stdev	41.07	20.68
	%CV	5.25	1.22
007	avg	801.0	1679.1
	stdev	29.31	25.59
	%CV	3.66	1.52
008	avg	822.3	1738.1
	stdev	27.02	20.69
	%CV	3.29	1.19
All	avg	787.7	1691.8
	stdev	42.48	38.71
	%CV	5.39	2.29

VI. Qualification Tests

This NPRM proposes a set of qualification tests for the Q3s. In general, Part 572 qualification tests assess the components that play a key role in the dummy's performance in the intended regulatory application. The tests qualify the dummy as an objective and suitable test device for the assessment of occupant safety in compliance tests specified in Federal motor vehicle safety standards, and for other testing purposes. Performance within these corridors assures that the dummy is capable of responding properly in a compliance or research test, while performance outside of these corridors indicates the need for adjustment, repair or replacement.

a. Overview of Proposed Corridors

Proposed qualification requirements for the Q3s are shown in Table 16. NHTSA has published a technical document, ''Qualification Procedures for the Q3s Child Side Impact Crash Test Dummy (NHTSA, 2013),'' describing the equipment, test set-ups and procedures. A copy of the report has been placed in the docket.

TABLE 17—PROPOSED Q3S QUALIFICATION REQUIREMENTS

Test	Measurement	Units	Corridor
Head—Frontal	Resultant acceleration	G	250–297
Head—Lateral	Resultant acceleration	G	113–140
Neck—Flexion	Maximum rotation	deg	70–82
	Time of max rotation	msec	55–63
	Peak moment (My)	N-m	41–51
	Time of peak My	msec	49–62
	Decay time to 0 from peak angle	msec	50–54
Neck—Lateral	Maximum rotation	deg	77–88
	Time of max rotation	msec	65–72
	Peak moment (Mx)	N-m	25–32
	Time of peak Mx	msec	66–73
	Decay time to 0 from peak angle	msec	63–69
Neck—Torsion	Maximum rotation	deg	75–93
	Time of max rotation	msec	91–113
	Peak moment (Mz)	N-m	8–10
	Time of peak Mz	msec	85–105
	Decay time to 0 from peak angle	msec	84–103
Shoulder	Lateral displacement	mm	16–21
	Peak probe force	kN	1.24–1.35
Thorax with Arm	Lateral displacement	mm	23–28
	Peak probe force	kN	1.38–1.69
Thorax without Arm	Lateral displacement	mm	24–31
	Peak probe force	N	620–770
Lumbar—Flexion	Maximum rotation	deg	48–57
	Time of max rotation	msec	52–59
	Peak moment (My)	N-m	78–94
	Time of peak My	msec	46–57
	Decay time to 0 from peak angle	msec	50–56
Lumbar—Lateral	Maximum rotation	deg	47–59
	Time of max rotation	msec	50–59
	Peak moment (Mx)	N-m	78–97
	Time of peak Mx	msec	46–57
	Decay time to 0 from peak angle	msec	47–59
Pelvis	Peak pubic load	N	700–870
	Peak probe force	kN	1.57–1.81

The bounds we have proposed for the qualification targets (the corridors) are wide enough to account for normal variations in dummy and laboratory differences, and narrow enough to assure consistent and repeatable measurements in compliance testing. Our proposed bounds are based on tests conducted at a single laboratory, NHTSA's Vehicle Research and Test Center (VRTC). The data were collected using four Q3s units. For each measurement, performance targets were derived using either ±3 standard deviations from the mean or 10 percent from the mean, whichever is narrower. Upper and lower bounds were rounded to the next whole number away from the mean using three significant digits.

We recognize that from a probabilistic standpoint, three standard deviations is an unusually wide bound. A bound of 10 percent around a target is typical of most Part 572 ATD qualifications. Our reason for initially setting the bounds to be wide for this NPRM stem from a current lack of test data for the Q3s.[28] Given that all Q3s qualification data were collected from a single laboratory (VRTC), we could not factor into account unknown variability associated with different labs, operators, dummies, and other allowable variances such as temperature and humidity that may not be present in our dataset. We will continue to collect qualification data, and we will examine all qualification data provided to us by commenters. We anticipate that when new qualification data are combined with our current set of data, in a final rule our bounds will be narrowed as reasonably possible and may be no greater than two standard deviations.

b. Rationale for the Tests

The technical document cited earlier in this preamble, ''Evaluation of the Q3s Three Year-Old Child Side Impact Dummy, Repeatability, Reproducibility, and Durability,'' discusses how the agency's four Q3s units conform to the qualification requirements. This report also discusses our rationale for the tests and proposed response requirements needed to qualify the Q3s. For each test, the impact energy level and the selection of the targeted measurements were chosen by balancing multiple criteria, as described below.

Dummy Functionality

For each test, certain dummy sensors and signal characteristics (such as the magnitude and timing) have been specified as qualification targets. By monitoring these sensors, the qualification tests assure that the dummy is functioning properly. Loose or damaged dummy hardware is often manifested in a signal that does not conform to the qualification requirements, thus alerting test technicians that dummy maintenance may be needed. Conformity also assures that the sensors themselves are working properly.

Test protocols are also designed to properly demonstrate dummy functionality by mirroring dummy loading patterns seen in CRS sled tests

[28] For other Part 572 ATDs, we set qualification bounds by examining data from multiple test labs, several dummies, and dummies built by different dummy manufacturers. For example, the qualification bounds for the HIII–10C (the most recent test dummy to be incorporated into part 572) were derived from tests on about 30 different dummies, with data supplied from about 10 different laboratories. On average, the bound widths for the HIII–10C are about 10% of the mean, with a low of 7.4% and a high of 16.3%.

conducted in support of the FMVSS No. 213 side impact test under consideration. For example, we have observed the Q3s undergoing asymmetric motion as the dummy simultaneously moves forward and laterally. In doing so, the motion of the dummy is such that it may twist itself around the edge of the CRS so that the head may strike the door panel near its forehead. The degree to which the dummy wraps around the seat can vary widely depending upon the design of the CRS. Thus, we have included separate frontal and lateral qualification requirements for the head.

We have also included separate requirements for the neck and lumbar spine elements of the dummy, which are flexible rubber components that experience both frontal and lateral flexion during a CRS test.

Additionally, a torsion test is prescribed for the neck since the neck also twists along its long axis to some degree.

For the shoulder, thorax, and pelvis, we believe that only pure lateral qualification requirements are needed, since almost all loads pass through their lateral aspects even in cases where the dummy twists within the CRS during testing.

Assure Biofidelity

Many of the qualification test protocols are very similar to the dynamic tests used to assess biofidelity. This helps to assure that a qualified dummy is also a biofidelic dummy.

Sufficient Energy

The impact speeds and probe masses have been selected to demonstrate that the various body segments of the Q3s are working properly at energy levels at or near those associated with injury thresholds. These include pass/fail thresholds that we are considering for the FMVSS No. 213 side impact test. For measurements not associated with IARVs, such as the neck torsion requirement, the energy levels are chosen to be consistent with high-end responses observed in CRS testing. In general, the energy level is chosen to exercise the dummy but without causing damage.

Proven Soundness of Part 572

To the extent possible, we have based the proposed test protocols and devices on qualification tests set forth for other test dummies in Part 572. The qualification tests have been proven reliable and sound in qualifying NHTSA's other test dummies. Moreover, using the same basic tests minimizes the amount of new qualification equipment needed by test laboratories that may already have such equipment in place for qualifying other ATDs.

c. New and Modified Part 572 Tests and Equipment

This NPRM proposes only one new test not found elsewhere in Part 572, a method to assure the functionality of the Q3s neck under torsion. This is a fairly simple procedure added to assure that the neck is repeatable under twist. The test involves the use of a special test fixture attached to the Part 572 pendulum which imparts a pure torsion moment to the isolated neck.

Additionally, a few minor changes to established Part 572 protocol and equipment have been introduced to improve the ease and consistency of the qualification tests. The pendulum probe used to qualify the Q3s is specified to be 3.81 kg, which is about twice as large as the 1.70 kg probe used for the HIII–3C, Subpart P qualifications (Hybrid III 3-year-old child test dummy used for frontal testing). This probe was chosen to enable the same probe to be used for all Q3s qualification tests that use a probe. The heavier probe allows a range of reasonable test speeds to be used to attain the desired response level. Tests speeds range from 3.6 m/s (shoulder impact) up to 5.0 m/s (thorax with arm). In contrast, the test speed for the thorax test of the HIII–3C with the lighter probe is 6.0 m/s.

We have also proposed a new test instrument for the flexion tests of the neck and the lumbar spine. These tests measure relative rotation by means of two angular rate sensors (ARSs). The ARSs that we specify represent a relatively new technology. For similar tests with all other Part 572 dummies, relative rotation is measured using a system of rotary potentiometers and a linking rod. Because the potentiometer system is mounted off-axis, it creates an asymmetry that can create problems with a small dummy like the Q3s. We are concerned that the added mass and inertia of a potentiometer system can introduce twisting of the head simulator, which may affect the accuracy of the measurements.

ARS units, on the other hand, are lightweight and compact. They do not require a connecting rod and they can be mounted very near to the headform's axis of symmetry so that their propensity to twist during a test due to the added mass is greatly reduced. Furthermore, throughout our testing of the Q3s the angular rate sensors have been observed to produce very accurate measures of rotation. We tentatively conclude that use of the ARS units in this application would be an improvement over potentiometers.

d. Proposed Test Specifications and Performance Requirements

NHTSA proposes the following performance specifications for the head in drop tests, and for the neck, shoulder, thorax, lumbar spine, and pelvis in pendulum tests. Performance requirements in the lateral direction must be met by carrying out the tests in the direction opposing the primary load vector of the ensuing full scale test for which the dummy is being qualified. For example, if the dummy is to be used in an impact to the left side of a CRS, qualification tests on the left aspect of the dummy's head, neck, shoulder, thorax, lumber spine, and pelvis are carried out. The fore-aft performance requirements for the head, neck, and lumbar spine must be met for all impact tests. That is, in addition to the lateral tests, the fore-aft tests are conducted on the ATD regardless of which side of the CRS is tested.

Head Drop Tests

The correct kinematic response of the head-neck system is of substantial importance to quantify the protection offered by CRSs in terms of head motion and acceleration during an impact. This test serves to assure the uniformity of the impact response. Head qualification consists of two test components: Frontal and lateral head drops. The frontal head drop is conducted from a height of 376 mm, while the lateral head drop is conducted at 200 mm.

The head must respond with peak resultant acceleration between: 250 g and 297 g when dropped from 376 mm height such that the forehead lands onto a flat rigid surface; and between 113 g and 140 g when dropped from a 200 mm height such that the side of the head lands onto a flat rigid surface.

Neck Pendulum Test

We believe that a repeatable kinematic response of the head-neck system is important to quantify the protection offered by CRSs in terms of limiting head excursion and head acceleration in both a head impact and a non-impact situation. Under the CRS test protocol under consideration by the agency, the primary kinematic motion of the head is in the lateral direction, but the head also twists and turns in other directions to a lesser extent. Given the importance of head motion, we believe a full set of neck qualification requirements is warranted to assure uniformity. Therefore, our proposed neck qualification consists of three test components: Frontal flexion, lateral

flexion, and torsion neck pendulum tests.

The neck would have to allow the headform to articulate in pendulum tests at:

- 4.7 m/s in frontal flexion, at between 70 degrees and 82 degrees occurring between 55 ms and 63 ms from time zero and decaying back to the zero angle between 50 ms and 54 ms after the peak rotation; the value of the maximum moment must be between 41 N-m and 51 N-m occurring between 49 ms and 62 ms from time zero,
- 3.8 m/s in lateral flexion, at between 77 degrees and 88 degrees occurring between 65 ms and 72 ms from time zero and decaying back to the zero angle between 63 ms and 69 ms after the peak rotation; the value of the maximum moment must be between 25 N-m and 32 N-m occurring between 66 ms and 73 ms from time zero, and
- 3.6 m/s in torsion, at between 75 degrees and 93 degrees occurring between 91 ms and 113 ms from time zero and decaying back to the zero angle between 84 ms and 103 ms after the peak rotation; the value of the maximum moment must be between 8 N-m and 10 N-m occurring between 84 ms and 103 ms from time zero.

Shoulder Impact Test

Though injury assessment is not generally associated with the shoulder, the way the shoulder absorbs energy can affect the overall kinematics of the dummy. This test assures that the shoulder acts uniformly in the way it distributes the load under a direct lateral impact.

The shoulder exposed to a pendulum impact at 3.6 m/s is to exhibit a peak shoulder deflection between 16 mm and 21 mm, and a peak resistance force between 1,240 N and 1,350 N.

Thorax Impact Tests

The thorax qualification tests are very similar to the SAE test used to assess lateral thorax biofidelity. For qualification, however, the test is conducted two ways: Without arm interaction (as in the SAE test) and with the arm attached such that the impact probe strikes the upper arm. Both tests utilize a lateral impact with a 3.8 kg probe.

The thorax ''without arm'' test assures uniformity of the thorax structure, including its mount to the spine, and its response to a direct impact in terms of rib deflection. The arm is completely removed from the dummy. The 3.8 kg test probe is aligned with the thorax displacement IR–TRACC and impacts the thorax laterally at a speed of 3.3 m/s.

For the ''arm attached'' test, the upper arm is positioned vertically and aligned with the dummy's thorax. The lower arm is positioned to make a 90 degree angle with the upper arm. The loading of the ribcage goes through the arm. The impact speed of the probe is 5.0 m/s. This test assures uniformity of the arm in the way it absorbs energy and interacts with the thorax under a direct lateral impact.

The thorax exposed to a pendulum impact:

- At 3.3 m/s, without arm, is to exhibit a peak thorax deflection between 24 mm and 31 mm, and a peak resistance force between 620 N and 770 N; and,
- at 5.0 m/s, with arm attached, is to exhibit a peak thorax deflection between 23 mm and 28 mm, and a peak resistance force between 1,380 N and 1,690 N occurring after 5 ms from time zero.

As explained previously, the peak probe force is taken after 5 ms to separate the probe's initial inertial response during arm contact from its response due to its interaction with the thorax. The net effect of recording the peak probe force after 5 ms is the elimination of the first peak.

Lumbar Tests

The rubber lumbar column bends to some extent during a CRS side impact test. This bending might affect the overall kinematics of the dummy, including the excursion of the head. It could also affect lateral loads and the deflection of the thorax. We believe that this rubber element can be a source of variability, so we have included a qualification test to assure the uniformity and integrity of this component.

Lumbar testing would consist of two types of pendulum tests: A frontal test and a lateral test. For both tests, the lumbar spine element containing the flexible column is removed from the dummy, similar to the neck qualification tests. Lumbar tests are conducted using the same Part 572 neck pendulum and headform device utilized in the neck qualification tests. In the case of lumbar qualification, the headform is not intended to represent the inertial properties of any particular body region, but merely provides an apparatus that helps to ensure a repeatable test condition. The frontal and lateral pendulum tests are conducted at the same impact speed of 4.4 m/s and specify the same pendulum impulse.

We propose that the lumbar spine must allow the headform to articulate:

- In frontal flexion, at not less than between 48 degrees and 57 degrees occurring between 52 ms and 59 ms from time zero and decaying back to zero angle between 50 ms and 56 ms after the peak rotation; the value of the maximum moment must be between 78 N-m and 94 N-m occurring between 46 ms and 57 ms from time zero; and,
- in lateral flexion, at not less than between 47 degrees and 59 degrees occurring between 50 ms and 59 ms from time zero and decaying back to zero angle between 47 ms and 59 ms after the peak rotation; the value of the maximum moment must be between 78 N-m and 97 N-m occurring between 46 ms and 57 ms from time zero.

Pelvis Impact

A lateral impact with the 3.8 kg probe at 4.0 m/s is used to test the pelvis. This test protocol is very similar to the SAE biofidelity test. The pelvis exposed to a pendulum impact at 4.0 m/s is to exhibit a peak pubic load between 700 N and 870 N, and a peak force measured by the pendulum between 1570 N and 1810 N.

Other

We have not included a qualification test aimed specifically at the Q3s abdomen. We tentatively believe that any non-uniformity in stiffness due to the absence of a qualification requirement for the abdomen would have an insignificant effect on the overall kinematics of the dummy in a side impact test. Also, the abdomen of the Q3s is uninstrumented and is thus not generally used to assess injury potential in a side impact.

Nevertheless, comments are requested on the need for a qualification test for the abdomen. The abdomen is made of a high density, compressible foam material, whose compressive characteristics can vary from one abdomen to another and whose properties can change with aging and other factors. We request comments on an abdominal test protocol similar to that which we used to assess the biofidelity of the Q3s abdomen.

VII. Durability

No durability problems arose with the Q3s dummies in any of the sled tests or component tests.

a. High-Energy Component Tests

We also conducted high-energy component tests to assess durability and no durability problems arose in those. In these tests, we raised the kinetic energy of the impact to levels that exposed the dummy to loading conditions slightly greater than those that might be

expected in the dummy's regulatory application. High-energy tests were conducted for the head, neck, shoulder, thorax (with and without arm), lumbar, and pelvis. As discussed below, we found no damage to the dummy's structural components or instrumentation.

High-Energy Head Drop Tests

We performed frontal and lateral head drop tests using the qualification test setup procedures, except the drop heights were increased to achieve kinetic energy increases of 10 percent, 20 percent, and 30 percent, as compared to the standard qualification test.

Frontal head drop responses are summarized in Table 18. The peak resultant head acceleration at 30 percent increased energy was 318.5 g. This impact resulted in a HIC15 value of 1732.5, which is well above the proposed injury criterion limit of 700 and demonstrates the severity of the test. Post-test inspection of the head revealed no structural damage to the synthetic skull material or to the vinyl skin.

Lateral head drop responses are summarized in Table 19. For the most severe condition, the peak resultant head acceleration was 146.6 g. No structural damage of the head was observed in the post-test inspection of the head assembly.

TABLE 18—HIGH-ENERGY FRONTAL HEAD DROP TEST RESPONSES

Test No.	Energy increase (nominal) (percent)	Drop height (mm)	Peak resultant accel (g)
Baseline	0	376	265.5
1	10	414	284.6
2	20	451	304.4
3	30	489	318.5

TABLE 19—HIGH-ENERGY LATERAL HEAD DROP TEST RESPONSES

Test No.	Energy increase (nominal) (percent)	Drop height (mm)	Peak resultant accel (g)
Baseline	0	200	121.5
1	10	220	127.3
2	20	240	141.6
3	30	260	146.6

High-Energy Neck Pendulum Tests

We conducted frontal, lateral, and torsional neck pendulum tests at the increased impact speeds. Tests were conducted according to the qualification procedures, except for the increase in impact speeds.

Frontal Flexion Tests. The results of the high-energy frontal neck flexion tests are summarized in Table 20. Three repeat tests were run at 5.5 m/s. This speed represents a 34 percent increase in energy over the qualification speed. We chose this condition because it is consistent with the test protocol used to qualify the HIII–3C (a frontal impact dummy). We found no signs of damage or unusual wear to the Q3s neck or neck cable at the elevated speed. The response curves were smooth, indicating that no unusual contact occurred during the tests. The tests also demonstrate that the Q3s neck would be repeatable if the dummy were used in a frontal impact mode.

Lateral Flexion Tests. The results of the high-energy lateral neck flexion tests are summarized in Table 21. Incremental tests were run at impact speeds needed to achieve increases in kinetic energy of 10 percent, 20 percent, and 30 percent. In all cases, the response signals were smooth with no indication of damage.

Torsion Tests. The high-energy neck torsion tests were also run at impact speeds needed to achieve energy increases of 10 percent, 20 percent, and 30 percent. The responses are summarized in Table 22. In all cases, the response signals were smooth with no indication of damage.

TABLE 20—FRONTAL FLEXION NECK PENDULUM TEST RESPONSES

Test No.	Energy increase (nominal) (percent)	Impact speed, m/s	Max angle		Peak Y-moment		Head rotation decay time, m/s
			angle deg	time ms	moment N-m	time ms	
Baseline	0	4.7	74.0	58.2	44.9	54.1	51.5
1	34	5.5	78.8	55.9	62.3	53.0	48.0
2	34	5.5	80.1	55.4	66.0	52.7	47.7
3	34	5.5	79.4	57.0	63.2	53.2	47.6

TABLE 21—LATERAL FLEXION NECK PENDULUM TEST RESPONSES

Test No.	Energy increase (nominal) (percent)	Impact speed, m/s	Max angle		Peak Y-moment		Head rotation decay time, m/s
			angle deg	time ms	moment N-m	time ms	
baseline	0	3.8	80.9	68.7	26.9	70.2	64.8
1	10	4.0	82.3	68.9	27.1	70.1	65.5
2	20	4.2	85.1	67.2	31.9	66.8	63.2
3	30	4.3	86.8	66.8	34.3	66.3	62.3

TABLE 22—NECK TORSION PENDULUM TEST RESPONSES

Test No.	Energy increase (nominal) (percent)	Impact speed	Max angle		Peak Z-Moment		Head rotation decay time
			angle	time	moment	time	
		m/s	Deg	Ms	N-m	ms	ms
baseline	0	3.6	80.9	99.5	9.35	92.1	88.7
1	10	3.8	83.3	102.9	9.35	95.5	91.7
2	20	3.9	83.8	101.5	9.40	95.0	91.2
3	30	4.1	87.4	103.1	9.73	96.9	91.0

High-Energy Shoulder Impact Tests

The agency conducted shoulder impacts according to the qualification test setup procedures, except the impact speeds were increased to achieve increases in kinetic energy of approximately 10 percent, 20 percent, and 30 percent as compared to the qualification test. Table 23 provides a summary of the responses for the high-energy shoulder impact tests. At the 30 percent increased energy level, the peak lateral shoulder deflection was 20.4 mm and the response curve was smooth, indicating that the shoulder string pot did not reach its maximum allowable stroke. The peak probe force was 1450 N. Post-test inspections revealed no structural damage to the dummy or instrumentation.

TABLE 23—HIGH-ENERGY SHOULDER IMPACT TEST RESPONSES

Test No.	Energy increase (nominal) (percent)	Impact speed (m/s)	Shoulder displacement (mm)	Probe force (N)
baseline	0.0	3.6	17.6	1269
1	10	3.8	19.7	1348
2	20	4.0	20.1	1443
3	30	4.1	20.4	1450

High-Energy Thorax Impact Tests

We conducted high-energy thorax impact tests with and without the arm. We followed the set-up procedures used in the qualification tests, except we increased the probe impact speeds to supply a corresponding increase in the kinetic energy.

For the ''with arm'' tests, we conducted one impact at 20 percent increased kinetic energy and two at a 30 percent increase. Table 24 summarizes the responses for the high-energy thorax with arm impacts. The highest lateral thorax displacement was 28.7 mm and the response curve was smooth. Post-test inspections demonstrated that no damage occurred to any portion of the dummy's torso.

For the thorax ''without arm'' test condition (Table 25), because thorax durability was a concern with earlier versions of the Q3s, we conducted tests at higher severity levels to provide a rigorous assessment of the durability of the thorax. For the thorax ''without arm'' test condition, we conducted an impact at 50 percent increased kinetic energy and another impact at a 70 percent increase. No structural damage was observed during post-test inspections of the dummy's thorax and IR–TRACC displacement transducer.

In addition, for the thorax ''without arm'' test condition, we conducted tests at increased severity levels to assess further the durability of the IR–TRACC device. The maximum allowable lateral thorax displacement before damage occurs to the IR–TRACC displacement measurement device is approximately 40 mm. Considering this physical limitation, we increased the probe impact speed until the lateral displacement approached 38 mm. We found that the impact speed corresponding to roughly 38 mm of displacement was 4.4 m/s (approximately an 80 percent increase in kinetic energy). Accordingly, we conducted two additional impact tests at that speed. For the three tests conducted at 80 percent increased kinetic energy, the lateral thorax displacement ranged from 37.1–37.9 mm and the response curves were smooth, indicating that the transducer did not exceed its maximum allowable stroke. No structural damage was observed during post-test inspections of the dummy's thorax and IR–TRACC displacement transducer.

TABLE 24—HIGH-ENERGY THORAX WITH ARM IMPACT TEST RESPONSES

Test No.	Energy increase (nominal) (percent)	Impact speed (m/s)	Thorax displacement (mm)	Probe force (N)
baseline	0	5.0	25.0	1526
1	20	5.5	27.0	1663
2	30	5.7	28.3	1625
3			28.7	1652

TABLE 25—HIGH-ENERGY THORAX WITHOUT ARM IMPACT TEST RESPONSES

Test No.	Energy increase (nominal) (percent)	Impact speed (m/s)	Thorax displacement (mm)	Probe force (N)
baseline	0	3.3	26.0	732
1	50	4.0	32.8	784
2	70	4.3	36.2	772
3	80	4.4	37.9	799
4			37.3	814
5			37.1	815

High-Energy Lumbar Pendulum Tests

We conducted high-energy frontal and lateral lumbar pendulum tests according to the qualification test set-up procedures, except the impact speeds were increased. For frontal pendulum tests, the impact energy was increased up to approximately 30 percent greater than the qualification test, while lateral tests were increased up to approximately 40 percent greater than the qualification test.

The frontal test results are summarized in Table 26 and the lateral results are summarized in Table 27. The lumbar moment and rotation responses did not indicate any unusual issues with the lumbar spine element or load cell in either of the test conditions. No damage or delamination was observed in post-test inspections of the lumbar components.

TABLE 26—HIGH-ENERGY FRONTAL LUMBAR PENDULUM TEST RESPONSES

Test No.	Energy increase (nominal) (percent)	Impact speed, m/s	Max angle		Peak Y-moment		Head rotation decay time, ms
			Angle deg	Time ms	Moment N-m	Time ms	
Baseline	0	4.4	53.3	56.6	85.7	53.9	54.2
1	20	4.8	57.5	56.8	88.6	51.9	55.0
2	30	5.0	60.3	57.5	95.6	53.5	55.0

TABLE 27—HIGH-ENERGY LATERAL LUMBAR PENDULUM TEST RESPONSES

Test No.	Energy increase (nominal) (percent)	Impact speed, m/s	Max angle		Peak Y-moment		Head rotation decay time, ms
			Angle deg	Time ms	Moment N-m	Time ms	
Baseline	0	4.4	53.9	56.0	83.5	50.3	49.2
1	20	4.8	59.0	57.3	95.7	54.0	54.0
2	30	5.0	60.7	57.4	100.8	54.0	54.0
3	40	5.2	62.9	56.6	107.7	53.3	53.3

High-Energy Pelvis Impact Tests

We conducted high-energy pelvis impacts in accordance with the qualification test set-up procedures, except we increased impact speeds to achieve increases in kinetic energy of approximately 15 percent, 40 percent, and 55 percent. The responses for the high-energy pelvis impact tests are summarized in Table 28. At the highest energy level, the lateral pubic load was 1057 N (well beyond the 450 N maximum observed in the Cozy Cline R&R series) and the probe force was 2357 N. Analysis of the lateral pubic load response revealed a smooth curve, indicating no unusual contact internal to the dummy. No damage to the pelvis region was observed during post-test inspections.

TABLE 28—HIGH-ENERGY PELVIS IMPACT TEST RESPONSES

Test No.	Energy Increase (nominal) (percent)	Impact speed (m/s)	Pubic force (N)	Probe force (N)
baseline	0.0	4.0	796	1712
1	15	4.3	843	1896
2	40	4.7	1001	2209
3	55	5.0	1057	2357

b. Q3s Servicing and Maintenance

In our experience with other Part 572 ATDs, deformable parts typically have the shortest service lives. The two most often replaced parts are the ribcage and the molded neck. For example, we have found the typical service life for HIII–10C rib sets and neck assemblies to be about thirty sled tests. Vinyl flesh materials—particularly the chest flesh—are also replaced on a recurring basis as they become aged, abraded, or torn.

NHTSA owns four Q3s units of the final Build Level D version, which include the updated parts to improve the durability of the thorax, neck, and pelvis. There have been no durability problems with the ATDs since they have been upgraded to the latest build level. Given the record of low maintenance to our own Q3s units, we consider the dummy to be highly suitable for proposed use in FMVSS No. 213 in terms of its durability. Our records indicate that we have had relatively few instances of Q3s part replacements of any sort.

VIII. Drawings and Patents

Throughout the notice and comment period of this Part 572 rulemaking, the Q3s dummy will be available from Humanetics. The Q3s engineering drawings used to fabricate the dummy are available in the docket for public review and comment. The Q3s engineering drawings are a proprietary product owned by Humanetics,[29] with the exceptions noted in this section. Thus, during the comment period most drawings will display the Humanetics name in the title block and will have the following restrictive note:

> This drawing is the sole property of Humanetics Innovative Solutions, Inc. and is being provided to NHTSA and other related organizations for evaluation and comment related to NHTSA's rulemaking process. Except for commenting purposes pursuant to this process, the drawing shall not be copied or used for any other purpose without the written consent of Humanetics Innovative Solutions, Inc.

For the final rule, the note will be removed and the dummy drawings and designs will be free from any restrictions. This includes their use in fabrication and in building computer simulation models of the dummy.

During this comment period, some drawings will not have the Humanetics name in the title block and will not have the restrictive note on them. In these cases, NHTSA contracted with Humanetics to provide the part or expressly contributed to the design of the part. As described earlier in this preamble, Humanetics fabricated the Build Level D neck using detailed specifications provided by NHTSA. These specifications included detailed engineering drawings and a prototype of the neck itself. In addition, NHTSA also contributed to the design of the femur, hip, and several other minor parts of the dummy.

The list of drawings related to those agency's efforts is shown in Table 29. On these drawings, the NHTSA name appears in the title block and the restrictive note does not appear. These drawings are available to the public for use during this NPRM stage without restriction.

NHTSA is aware that Humanetics has filed a patent application with the United States Patent and Trademark Office covering certain parts of the Q3s dummy. Prior to the publication of any final rule, NHTSA plans to meet with Humanetics and come to some agreement that ensures the continued availability of the Q3s dummy to the general public at a reasonable price. Notwithstanding the intellectual property issues identified in this section, NHTSA emphasizes that readers should take this opportunity to review the information provided in this NPRM and provide responses on the substantive aspects of the proposal.

TABLE 29—LIST OF Q3S DRAWINGS FOR WHICH NO RESTRICTIVE NOTE APPEARS

Drawing No.	Description	Used on
020–2400	Neck assembly, Q3s	020–2400
020–2401	Molded neck, Q3s	020–2400
020–2402	Neck plate, top Q3s	020–2400
020–2403	Neck plate, middle, Q3s	020–2400
020–2404	Neck plate, bottom, Q3s	020–2400
020–2405	Retaining ring, Q3s neck	020–2400
020–2406	Square crimp, Q3s neck	020–2400
020–2407	Bottom crimp, Q3s neck cable	020–2400
020–2408	Neck cable assembly, Q3s	020–2400
020–2409	Retaining nut, Q3s neck	020–2400
020–9611	Femur, Right	020–9616
020–9511	Femur, Left	020–9516
020–9607	Femur reinforcement, Right	020–9616

[29] FTSS/Humanetics' development of the Q3s dummy was not performed directly under a government research and development contract. NHTSA procured its Q3s units under a standard purchase order in which the FTSS/Humanetics products were listed within a catalog with a price schedule. Using this same purchase mechanism, our units were periodically sent back to FTSS/Humanetics for warranty maintenance and upgrades. As we performed subsequent tests on our Q3s units, we routinely shared our results with FTSS/Humanetics, and concurrently reported them in public and in SAE and ISO committee meetings, providing test results, identifying problems, and suggesting ways to correct problems. FTSS/Humanetics produced parts based on this information, and periodically provided new components to NHTSA for evaluation.

TABLE 29—LIST OF Q3S DRAWINGS FOR WHICH NO RESTRICTIVE NOTE APPEARS—Continued

Drawing No.	Description	Used on
020–9507	Femur reinforcement, Left	020–9516
020–3537	Ball shoulder	020–9616, 020–9516
020–9903	End stop	020–9616, 020–9516
020–7116	Hip joint assembly, Right	020–7116
020–7113	Hip joint assembly, Left	020–7113
020–7115	Hip cup assembly, Right	020–7116, 020–7113
020–7114	Hip cup assembly, Left	020–7116, 020–7113
020–7117	Hip cup, upper	020–7116, 020–7113
020–7118	Hip cup, lower	020–7116, 020–7113
020–7103	Detent peg	020–7116, 020–7113
020–7104	Spring retainer plate	020–7116, 020–7113
020–9000	Q3s positioning tool	020–9000
020–9001	Indicator arm	020–9000
020–9002	Extension bracket	020–9000
020–9003	Cross beam	020–9000
020–9004	Knee spacer	020–9000
020–9005	Pivot screw	020–9000

IX. Consideration of Alternatives

We considered the merits of alternative test dummies for use in the side impact test under consideration for FMVSS No. 213. The closest viable alternatives were the modified Hybrid III 3-year-old child test dummy (HIII–3C) and the Q3.

Consideration of the Modified HIII–3C (''3Cs'')

The HIII–3C was originally developed in 1992. It is used in FMVSS No. 208, ''Occupant crash protection,'' to evaluate air bag aggressiveness or air bag suppression when a child is close to a deploying air bag, and in FMVSS No. 213's frontal sled test for the evaluation of child restraint performance. The HIII–3C was not designed for lateral impacts. Under lateral loading, the shoulder and torso exhibit highly stiff behavior and do not fully replicate a child's kinematics. NHTSA considered using the HIII–3C in the 2002 FMVSS No. 213 ANPRM published in response to the TREAD Act (see footnote 4, *supra*), but concluded that the ATD was not acceptable for use in side impact testing.

After the agency assessed the HIII–3C in side impacts, NHTSA developed a retrofit package for the dummy to install a new head and neck with better lateral biofidelity. The retrofitted dummy is referred to as the ''3Cs.''

NHTSA evaluated the 3Cs and the Q3s concurrently. Based on our biofidelity evaluations, the 3Cs did not achieve nearly as good a ranking as the Q3s. The technical report, ''Biofidelity Assessment of the Q3s Three-Year-Old Child Side Impact Dummy,'' *supra,* discusses the performance of the two ATDs. The Q3s outperformed or is equivalent to the 3Cs in every aspect of biofidelity related to a dummy's response in a side impact. Given the superior biofidelity of the Q3s, we believe that it more accurately represents the response expected of a human child.

In addition, the Q3s has thorax deflection instrumentation, which the 3Cs does not. We tentatively conclude that the Q3s is a better dummy than the 3Cs to measure injury assessment values in side impacts and is a preferable ATD for use in the proposed side impact upgrade to FMVSS No. 213.

Consideration of the Q3

As discussed in section II of this preamble, the design of the Q3s was derived from the original Q3 dummy developed by the European community. The Q3 is intended for use in frontal, side, and rear impacts.

Around the same time Humanetics was working to bring the Q3s up to production level, the Q3 underwent a significant design revision. Starting in 2003, a ''new'' Q3 took shape. Many of the new design concepts included in the Q3s were also built into the Q3 as Humanetics worked concurrently on both dummies (e.g., thorax string potentiometers were replaced by IR–TRACCs in both dummies). Still, as reported by the European Enhanced Vehicle-Safety Committee (Wismans, et al., 2008), the new Q3 does not respond well in lateral biofidelity tests. Furthermore, the thorax of the new Q3 has become even less biofidelic than the original. Therefore, NHTSA does not consider the Q3 preferable to the Q3s.

Conclusion

The agency tentatively concludes that the improved biofidelity and additional injury assessment capability of the Q3s compared to the other commercially available child side impact test dummies supports a decision to adopt the Q3s into 49 CFR Part 572. The Q3s dummy is a state-of-the-art device that would allow for a better assessment of the risk of injury to child occupants than the alternative test dummies. The availability of Q3s's injury measuring capability also is important to the design, development and evaluation of the side impact protection of child restraint systems. The Q3s test dummy is available today, and has been thoroughly evaluated for suitable reproducibility and repeatability of results.

X. Rulemaking Analyses and Notices

Executive Order (E.O.) 12866 and E.O. 13563, and DOT Regulatory Policies and Procedures

NHTSA has considered the impacts of this regulatory action under E.O. 12866 and E.O. 13563. This rulemaking action was not reviewed by the Office of Management and Budget under E.O. 12866. The rulemaking has also been determined to be non-significant under DOT's regulatory policies and procedures.

This document would amend 49 CFR Part 572 by adding design and performance specifications for a test dummy representative of a 3-year-old child that the agency would possibly use in FMVSS No. 213 side impact compliance tests and possibly for research purposes. This Part 572 proposed rule would not impose any requirements on anyone. Businesses are affected only if they choose to manufacture or test with the dummy. Because the economic impacts of this proposed rule are minimal, no further regulatory evaluation is necessary.

There are benefits associated with this rulemaking but they cannot be quantified. The incorporation of the test dummy into 49 CFR Part 572 would

enable NHTSA to use the ATD in a new dynamic side impact test that we are considering adopting into FMVSS No. 213. Adoption of side impact protection requirements in FMVSS No. 213 enhances child passenger safety and accords with MAP–21. In addition, the availability of this dummy in a regulated format would be beneficial by providing a suitable, stabilized, and objective test tool to the safety community for use in better protecting children in side impacts.

The cost of an uninstrumented Q3s dummy is approximately $48,750. The minimum set of instrumentation needed for qualification and compliance type testing includes three uni-axial accelerometers (part no. SA572–S4), one neck/spine load cell (SA572–S8), one shoulder potentiometer set (SA572–S38 and S39), one single axis IR–TRACC (SA572–S37), and one pubic load cell (SA572–S7). The cost of this instrumentation adds approximately $18,200 for a total cost of about $66,950.

We have not estimated the costs of the equipment needed to perform the qualification tests other than the instrumentation needed (two angular rate sensors, $1,230 apiece; one test probe accelerometer, $500; one rotary potentiometer, $500.) With the exception of the neck torsion fixture, the angular rate sensors, and the 3.8 kg test probe, all fixtures and instruments are common with those used to qualify other Part 572 dummies.

We recognize that dummy refurbishments and part replacements are an inherent part of ATD testing. Various parts will likely have to be refurbished or replaced, but we do not know which parts are likely to be worked on the most. However, since the dummies are designed to be reusable, costs of the dummies and of parts can be amortized over a number of tests.

Regulatory Flexibility Act

Pursuant to the Regulatory Flexibility Act (5 U.S.C. 601 et seq., as amended by the Small Business Regulatory Enforcement Fairness Act (SBREFA) of 1996), whenever an agency is required to publish a proposed or final rule, it must prepare and make available for public comment a regulatory flexibility analysis that describes the effect of the rule on small entities (i.e., small businesses, small organizations, and small governmental jurisdictions), unless the head of the agency certifies the rule will not have a significant economic impact on a substantial number of small entities. The Small Business Administration's regulations at 13 CFR Part 121 define a small business, in part, as a business entity ''which operates primarily within the United States.'' (13 CFR 121.105(a)).

We have considered the effects of this rulemaking under the Regulatory Flexibility Act. I hereby certify that this rulemaking action would not have a significant economic impact on a substantial number of small entities. This action would not have a significant economic impact on a substantial number of small entities because the addition of the test dummy to Part 572 would not impose any requirements on anyone. NHTSA would use the ATD in agency testing but would not require anyone to manufacture the dummy or to test motor vehicles or motor vehicle equipment with it.

National Environmental Policy Act

NHTSA has analyzed this proposed rule for the purposes of the National Environmental Policy Act and determined that it would not have any significant impact on the quality of the human environment.

Executive Order 13045 and 13132 (Federalism)

Executive Order 13045 (62 FR 19885, April 23, 1997) applies to any rule that: (1) Is determined to be ''economically significant'' as defined under E.O. 12866, and (2) concerns an environmental, health, or safety risk that NHTSA has reason to believe may have a disproportionate effect on children. If the regulatory action meets both criteria, we must evaluate the environmental health or safety effects of the planned rule on children, and explain why the planned regulation is preferable to other potentially effective and reasonably feasible alternatives considered by us.

This proposed rule is not subject to the Executive Order because it is not economically significant as defined in E.O. 12866.

NHTSA has examined today's proposed rule pursuant to Executive Order 13132 (64 FR 43255, August 10, 1999) and concluded that no additional consultation with States, local governments or their representatives is mandated beyond the rulemaking process. The agency has concluded that the proposed rule would not have federalism implications because the proposed rule would not have ''substantial direct effects on the States, on the relationship between the national government and the States, or on the distribution of power and responsibilities among the various levels of government.'' This proposed rule would not impose any requirements on anyone. Businesses will be affected only if they choose to manufacture or test with the dummy.

Further, no consultation is needed to discuss the preemptive effect of today's proposed rule. NHTSA's safety standards can have preemptive effect in two ways. This proposed rule would amend 49 CFR Part 572 and is not a safety standard.[30] This Part 572 proposed rule would not impose any requirements on anyone.

Civil Justice Reform

With respect to the review of the promulgation of a new regulation, section 3(b) of Executive Order 12988, ''Civil Justice Reform'' (61 FR 4729, February 7, 1996) requires that Executive agencies make every reasonable effort to ensure that the regulation: (1) Clearly specifies the preemptive effect; (2) clearly specifies the effect on existing Federal law or regulation; (3) provides a clear legal standard for affected conduct, while promoting simplification and burden reduction; (4) clearly specifies the retroactive effect, if any; (5) adequately defines key terms; and (6) addresses other important issues affecting clarity and general draftsmanship under any guidelines issued by the Attorney General. This document is consistent with that requirement.

Pursuant to this Order, NHTSA notes as follows.

The issue of preemption is discussed above in connection with E.O. 13132. NHTSA notes further that there is no requirement that individuals submit a petition for reconsideration or pursue other administrative proceeding before they may file suit in court.

Paperwork Reduction Act

Under the Paperwork Reduction Act of 1995, a person is not required to respond to a collection of information by a Federal agency unless the collection displays a valid control number from the Office of Management and Budget (OMB). This proposed rule would not have any requirements that are considered to be information

[30] With respect to the safety standards, the National Traffic and Motor Vehicle Safety Act contains an express preemptive provision: ''When a motor vehicle safety standard is in effect under this chapter, a State or a political subdivision of a State may prescribe or continue in effect a standard applicable to the same aspect of performance of a motor vehicle or motor vehicle equipment only if the standard is identical to the standard prescribed under this chapter.'' 49 U.S.C. 30103(b)(1). Second, the Supreme Court has recognized the possibility of implied preemption: State requirements imposed on motor vehicle manufacturers, including sanctions imposed by State tort law, can stand as an obstacle to the accomplishment and execution of a NHTSA safety standard. When such a conflict exists, the Supremacy Clause of the Constitution makes the State requirements unenforceable. *See Geier* v. *American Honda Motor Co.,* 529 U.S. 861 (2000).

collection requirements as defined by the OMB in 5 CFR Part 1320.

National Technology Transfer and Advancement Act

Section 12(d) of the National Technology Transfer and Advancement Act of 1995 (NTTAA), Public Law 104–113, section 12(d) (15 U.S.C. 272) directs NHTSA to use voluntary consensus standards in its regulatory activities unless doing so would be inconsistent with applicable law or otherwise impractical. Voluntary consensus standards are technical standards (e.g., materials specifications, test methods, sampling procedures, and business practices) that are developed or adopted by voluntary consensus standards bodies. The NTTAA directs NHTSA to provide Congress, through OMB, explanations when the agency decides not to use available and applicable voluntary consensus standards.

The following voluntary consensus standards have been used in developing the Q3s:

- SAE Recommended Practice J211, Rev. Mar 95, ''Instrumentation for Impact Tests—Part 1—Electronic Instrumentation''; and,
- SAE J1733 of 1994–12 ''Sign Convention for Vehicle Crash Testing.''

Unfunded Mandates Reform Act

Section 202 of the Unfunded Mandates Reform Act of 1995 (UMRA), Public Law 104–4, requires Federal agencies to prepare a written assessment of the costs, benefits, and other effects of proposed or final rules that include a Federal mandate likely to result in the expenditure by State, local, or tribal governments, in the aggregate, or by the private sector, of more than $100 million annually (adjusted for inflation with base year of 1995). Before promulgating a NHTSA rule for which a written statement is needed, section 205 of the UMRA generally requires the agency to identify and consider a reasonable number of regulatory alternatives and adopt the least costly, most cost-effective, or least burdensome alternative that achieves the objectives of the rule.

This proposed rule would not impose any unfunded mandates under the UMRA. This proposed rule does not meet the definition of a Federal mandate because it does not impose requirements on anyone. It amends 49 CFR Part 572 by adding design and performance specifications for a 3-year-old child side impact test dummy that the agency could use in FMVSS No. 213 and for research purposes. This proposed rule would affect only those businesses that choose to manufacture or test with the dummy. It would not result in costs of $100 million or more to either State, local, or tribal governments, in the aggregate, or to the private sector.

Plain Language

Executive Order 12866 requires each agency to write all rules in plain language. Application of the principles of plain language includes consideration of the following questions:

Has the agency organized the material to suit the public's needs?

Are the requirements in the rule clearly stated?

Does the rule contain technical language or jargon that is not clear?

Would a different format (grouping and order of sections, use of headings, paragraphing) make the rule easier to understand?

Would more (but shorter) sections be better?

Could the agency improve clarity by adding tables, lists, or diagrams?

What else could the agency do to make this rulemaking easier to understand?

If you have any responses to these questions, please send them to NHTSA.

Regulation Identifier Number

The Department of Transportation assigns a regulation identifier number (RIN) to each regulatory action listed in the Unified Agenda of Federal Regulations. The Regulatory Information Service Center publishes the Unified Agenda in April and October of each year. You may use the RIN contained in the heading at the beginning of this document to find this action in the Unified Agenda.

XI. Public Participation

How do I prepare and submit comments?

Your comments must be written and in English. To ensure better that your comments are correctly filed in the Docket, please include the docket number of this document in your comments.

Your comments must not be more than 15 pages long. (49 CFR 553.21). We established this limit to encourage you to write your primary comments in a concise fashion. However, you may attach necessary additional documents to your comments. There is no limit on the length of the attachments.

Comments may also be submitted to the docket electronically by logging into *http://www.regulations.gov.* Follow the online instructions for submitting comments.

Please note that pursuant to the Data Quality Act, in order for substantive data to be relied upon and used by the agency, it must meet the information quality standards set forth in the OMB and DOT Data Quality Act guidelines. Accordingly, we encourage you to consult the guidelines in preparing your comments. OMB's guidelines may be accessed at *http://www.whitehouse.gov/omb/fedreg/reproducible.html.*

How can I be sure that my comments were received?

If you wish the Docket Management Facility to notify you upon its receipt of your comments, enclose a self-addressed, stamped postcard in the envelope containing your comments. Upon receiving your comments, the Docket Management Facility will return the postcard by mail.

How do I submit confidential business information?

If you wish to submit any information under a claim of confidentiality, you should submit three copies of your complete submission, including the information you claim to be confidential business information, to the Chief Counsel's office, NHTSA, at the address given above under **FOR FURTHER INFORMATION CONTACT**. In addition, you should submit two copies, from which you have deleted the claimed confidential business information, to the Docket Management Facility at the address given above under **ADDRESSES**. When you send a comment containing information claimed to be confidential business information, you should include a cover letter setting forth the information specified in our confidential business information regulation. (49 CFR Part 512.)

Will the agency consider late comments?

We will consider all comments that the docket receives before the close of business on the comment closing date indicated above under **DATES**. To the extent possible, we will also consider comments received after that date. If the docket receives a comment too late for us to consider in developing a final rule (assuming that one is issued), we will consider that comment as an informal suggestion for a future rulemaking action.

How can I read the comments submitted by other people?

You may read the comments received by the Docket Management Facility at the address given above under **ADDRESSES**. The hours of the Docket are indicated above in the same location. You may also see the comments on the Internet. To read the comments on the

Internet, go to *http://www.regulations.gov.* Follow the online instructions for accessing the dockets.

Please note that even after the comment closing date, we will continue to file relevant information in the docket as it becomes available. Further, some people may submit late comments. Accordingly, we recommend that you periodically check the docket for new material.

Anyone is able to search the electronic form of all comments received into any of our dockets by the name of the individual submitting the comment (or signing the comment, if submitted on behalf of an association, business, labor union, etc.). You may review DOT's complete Privacy Act Statement in the **Federal Register** published on April 11, 2000 (Volume 65, Number 70; Pages 19477–78).

List of Subjects in 49 CFR Part 572

Motor vehicle safety, Incorporation by reference.

In consideration of the foregoing, NHTSA proposes to amend 49 CFR Part 572 as follows:

PART 572—ANTHROPOMORPHIC TEST DEVICES

■ 1. The authority citation for Part 572 would be amended to read as follows:

Authority: 49 U.S.C. 322, 30111, 30115, 30117 and 30166; delegation of authority at 49 CFR 1.95.

■ 2. 49 CFR Part 572 would be amended by adding a new Subpart W consisting of 572.210–572.219 to read as follows:

Subpart W—Q3s Three-Year-Old Child Test Dummy

Secs.

572.210 Incorporation by reference.
572.211 General description.
572.212 Head assembly and test procedure.
572.213 Neck assembly and test procedure.
572.214 Shoulder assembly and test procedure.
572.215 Thorax with arm assembly and test procedure.
572.216 Thorax without arm assembly and test procedure.
572.217 Lumbar spine assembly and test procedure.
572.218 Pelvis assembly and test procedure.
572.219 Test conditions and instrumentation.
Appendix—Figures to Subpart W of Part 572

§ 572.210 Incorporation by reference.

(a) Certain material is incorporated by reference (IBR) into this part with the approval of the Director of the Federal Register under 5 U.S.C. 552(a) and 1 CFR part 51. To enforce any edition other than that specified in this section, NHTSA must publish notice of change in the **Federal Register** and the material must be available to the public. All approved material is available for inspection at the Department of Transportation, Docket Operations, Room W12–140, telephone 202–366–9826, and is available from the sources listed below. The material is available in electronic format through Regulations.gov, call 1–877–378–5457 or go to *www.regulations.gov.* It is also available for inspection at the National Archives and Records Administration (NARA). For information on the availability of this material at NARA, call 202–741–6030 or go to *http://www.archives.gov/federal-register/cfr/ibr-locations.html.*

(b) NHTSA Technical Information Services, 1200 New Jersey Ave. SE., Washington, DC 20590, telephone 202–366–5965.

(1) A parts/drawing list entitled, ''Parts/Drawings List, Part 572 Subpart W, Q3s Three-Year-Old Child Test Dummy, May 2012,'' IBR approved for § 572.211.

(2) A drawings and inspection package entitled, ''Parts List and Drawings, Part 572 Subpart W, Q3s Three-Year-Old Child Test Dummy, May 2012,'' IBR approved for § 572.211, including:

(i) Drawing No. 020–0100, Complete Assembly Q3s, IBR approved for §§ 572.211, 572.212, 572.213, 572.214, 572.215, 572.216, 572.217, 572.218, and 572.219.

(ii) Drawing No. 020–1200, Head Assembly, IBR approved for §§ 572.211, 572.212, 572.214, 572.215, 572.216, 572.218, and 572.219.

(iii) Drawing No. 020–2400, Neck Assembly, IBR approved for §§ 572.211, 572.213, 572.214, 572.215, 572.216, 572.218, and 572.219.

(iv) Drawing No. 020–9050, Headform, IBR approved for §§ 572.211, 572.213, 572.217 and 572.219.

(v) Drawing No. DL210–200, Neck Twist Fixture, IBR approved for §§ 572.211, 572.213, and 572.219.

(vi) Drawing No. 020–4500, Torso Assembly, IBR approved for §§ 572.211, 572.214, 572.215, 572.216, 572.218 and 572.219.

(vii) Drawing No. 020–6000, Lumbar Spine Assembly, IBR approved for §§ 572.211, 572.217 and 572.219.

(viii) Drawing No. 020–7500, Pelvis Assembly, IBR approved for §§ 572.211, 572.214, 572.215, 572.216, 572.218, and 572.219.

(ix) Drawing No. 020–8001, Q3s Suit, IBR approved for §§ 572.211, 572.214, 572.215, 572.216, 572.218, and 572.219.

(x) Drawing No. 020–9500, Complete Leg Assembly—left, IBR approved for §§ 572.211, 572.214, 572.215, 572.216, 572.218, and 572.219 as part of a complete dummy assembly.

(xi) Drawing No. 020–9600, Complete Leg Assembly—right, IBR approved for §§ 572.211, 572.214, 572.215, 572.216, 572.218, and 572.219 as part of a complete dummy assembly.

(xii) Drawing No. 020–9700, Complete Arm Assembly—left, IBR approved for §§ 572.211, 572.214, 572.215, 572.216, 572.218, and 572.219 as part of a complete dummy assembly.

(xiii) Drawing No. 020–9800, Complete Arm Assembly—right, IBR approved for §§ 572.211, 572.214, 572.215, 572.216, 572.218, and 572.219 as part of a complete dummy assembly.

(3) A procedures manual entitled ''Procedures for Assembly, Disassembly and Inspection (PADI) of the Q3s Child Side Impact Crash Test Dummy, September 2013,'' IBR approved for §§ 572.211 and 572.219.

(c) SAE International, 400 Commonwealth Drive, Warrendale, PA 15096, call 1–877–606–7323.

(1) SAE Recommended Practice J211, Rev. Mar 95, ''Instrumentation for Impact Tests—Part 1—Electronic Instrumentation,'' IBR approved for § 572.219;

(2) SAE Information Report J1733 of 1994–12, ''Sign Convention for Vehicle Crash Testing,'' IBR approved for § 572.219.

§ 572.211 General description.

(a) The Q3s Three-Year-Old Child Test Dummy is defined by drawings and specifications containing the following materials:

(1) The parts enlisted in ''Parts List and Drawings, Part 572 Subpart W, Q3s Three-Year-Old Child Test Dummy, September 2013'' (incorporated by reference, see § 572.210).

(2) The engineering drawings and specifications contained in ''Parts List and Drawings, Part 572 Subpart W, Q3s Three-Year-Old Child Test Dummy, September 2013,'' which includes the engineering drawings and specifications described in Drawing 020–0000, the titles of which are listed in Table A, and,

(3) A manual entitled ''Procedures for Assembly, Disassembly and Inspection (PADI) of the Q3s Child Side Impact Crash Test Dummy, September 2013.''

TABLE A TO § 572.211

Component assembly	Drawing number
(i) Head Assembly	020–1200
(ii) Neck Assembly	020–2400
(iii) Torso Assembly	020–4500
(iv) Lumbar Spine Assembly.	020–6000
(v) Pelvis Assembly	020–7500

TABLE A TO § 572.211—Continued

Component assembly	Drawing number
(vi) Complete Leg Assembly—left.	020–9500
(vii) Complete Leg Assembly—right.	020–9600
(viii) Complete Arm Assembly—left.	020–9700
(ix) Complete Arm Assembly—right.	020–9800

(b) The structural properties of the dummy are such that the dummy conforms to this Subpart in every respect before use in any test.

§ 572.212 Head assembly and test procedure.

(a) The head assembly for this test consists of the complete head (drawing 020–1200) with head accelerometer assembly (drawing 020–1013A), and a half mass simulated upper neck load cell (drawing 020–1050) (all incorporated by reference, see § 572.210).

(b) When the head assembly is tested according to the test procedure in paragraph (c) of this section, it shall have the following characteristics:

(1) Frontal head qualification test. When the head assembly is dropped from a height of 376.0 ± 1.0 mm (14.8 ± 0.04 in) in accordance with subsection (c) of this section, the peak resultant acceleration at the location of the accelerometers at the head CG shall have a value between 250 G and 297 G. The resultant acceleration vs. time history curve shall be unimodal; oscillations occurring after the main pulse must be less than 10 percent of the peak resultant acceleration. The lateral acceleration shall not exceed 15 G (zero to peak).

(2) Lateral head qualification test. When the head assembly is dropped from a height of 200.0 ± 1.0 mm (7.87 ± 0.04 in) in accordance with subsection (c) of this section, the peak resultant acceleration at the location of the accelerometers at the head CG shall have a value between 113 G and 140 G. The resultant acceleration vs. time history curve shall be unimodal; oscillations occurring after the main pulse must be less than 10 percent of the peak resultant acceleration. The X-component acceleration shall not exceed 20 G (zero to peak).

(c) *Test procedure:* The test procedure for the head assembly is as follows:

(1) Soak the head assembly in a controlled environment at any temperature between 18.9 and 25.6 °C (66 and 78 °F) and a relative humidity from 10 to 70 percent for at least four hours prior to a test.

(2) Prior to the test, clean the impact surface of the skin and the impact plate surface with isopropyl alcohol, trichloroethane, or an equivalent. The skin of the head and the impact plate surface must be clean and dry for testing.

(3)(i) For the frontal head test, suspend and orient the head assembly with the forehead facing the impact surface as shown in Figure W1. The lowest point on the forehead must be 376.0 ± 1.0 mm (14.8 ± 0.04 in) from the impact surface. Assure that the head is horizontal laterally. Adjust the head angle so that the upper neck load cell simulator is 28 ± 2 degrees forward from the vertical while assuring that the head remains horizontal laterally.

(ii) For the lateral head test, the head is dropped on the aspect that opposes the primary load vector of the ensuing full scale test for which the dummy is being qualified. A left drop set up that is used to qualify the dummy for an ensuing full scale left side impact is depicted in Figure W2. A right drop set-up would be the mirror image of that shown in Figure W2. Suspend and orient the head assembly as shown in Figure W2. The lowest point on the impact side of the head must be 200.0 ± 1.0 mm (7.87 ± 0.04 in) from the impact surface. Assure that the head is horizontal in the fore-aft direction. Adjust the head angle so that the head base plane measured from the base surface of the upper neck load cell simulator is 35 ± 2 degrees forward from the vertical while assuring that the head remains horizontal in the fore-aft direction.

(4) Drop the head assembly from the specified height by means that ensure a smooth, instant release onto a rigidly supported flat horizontal steel plate which is 50.8 mm (2 in) thick and 610 mm (24 in) square. The impact surface shall be clean, dry and have a micro finish of not less than 203.2×10^{-6} mm (8 micro inches) (RMS) and not more than $2{,}032.0 \times 10^{-6}$ mm (80 micro inches) (RMS).

(5) Allow at least 2 hours between successive tests on the same head.

§ 572.213 Neck assembly and test procedure.

(a)(1) The neck and headform assembly (refer to § 572.210(b)(2)(iii) and § 572.210(b)(2)(iv)) for the purposes of the fore-aft neck flexion and lateral neck flexion qualification tests, as shown in Figures W3 and W4, consists of the headform (drawing 020–9050, sheet 1) with angular rate sensor installed (drawing SA572–S58), six-channel neck/lumbar load cell (drawing SA572–S8), neck assembly (drawing 020–2400), neck/torso interface plate (drawing 020–9056) and pendulum interface plate (drawing 020–9051) with angular rate sensor installed (drawing SA572–S58) (all incorporated by reference, see § 572.210).

(2) The neck assembly (refer to § 572.210(b)(2)(iii) and § 572.210(b)(2)(v)) for the purposes of the neck torsion qualification test, as shown in Figure W5, consists of the neck twist fixture (drawing DL210–200) with rotary potentiometer installed (drawing SA572–S51), neck adaptor plate assembly (drawing DL210–220), neck assembly (drawing 020–2400), six-channel neck/lumbar load cell (drawing SA572–S8), and twist fixture end plate (drawing DL210–210) (all incorporated by reference, see § 572.210).

(b) When the neck and headform assembly as defined in § 572.213(a)(1), or the neck assembly as defined in § 572.213(a)(2), is tested according to the test procedure in paragraph (c) of this section, it shall have the following characteristics:

(1) Fore-aft neck flexion qualification test.

(i) Plane D, referenced in Figure W3, shall rotate in the direction of pre-impact flight with respect to the pendulum's longitudinal centerline between 70 degrees and 82 degrees, which shall occur between 55 and 63 ms from time zero. The peak moment, measured by the neck transducer (drawing SA572–S8) (incorporated by reference, see § 572.210) shall have a value between 41 N-m (30.2 ft-lbf) and 51 N-m (37.6 ft-lbf) occurring between 49 and 62 ms from time zero.

(ii) The decaying headform rotation vs. time curve shall cross the zero angle with respect to its initial position at time of impact relative to the pendulum centerline between 50 to 54 ms after the time the peak rotation value is reached.

(iii) All instrumentation data channels are defined to be zero when the longitudinal centerline of the neck and pendulum are parallel.

(iv) The headform rotation shall be calculated by the following formula with the integration beginning at time zero:

$$\text{Headform rotation (deg)} = \int [(\text{Headform Angular Rate})_y - (\text{Pendulum Angular Rate})_y]\, dt$$

(v) $(\text{Headform Angular Rate})_y$ is the angular rate about the y-axis in deg/sec measured on the headform (drawing 020–9050, sheet 1), and $(\text{Pendulum Angular Rate})_y$ is the angular rate about the y-axis in deg/sec measured on the pendulum interface plate (drawing 020–9051) (incorporated by reference, see § 572.210).

(2) Lateral neck flexion qualification test.

(i) Plane D, referenced in Figure W4, shall rotate in the direction of pre-impact flight with respect to the pendulum's longitudinal centerline between 77 degrees and 88 degrees, which shall occur between 65 and 72 ms from time zero. The peak moment, measured by the neck transducer (drawing SA572–S8) (incorporated by reference, see § 572.210) shall have a value between 25 N-m (18.4 ft-lbf) and 32 N-m (23.6 ft-lbf) occurring between 66 and 73 ms from time zero.

(ii) The decaying headform rotation vs. time curve shall cross the zero angle with respect to its initial position at time of impact relative to the pendulum centerline between 63 to 69 ms after the time the peak rotation value is reached.

(iii) All instrumentation data channels are defined to be zero when the longitudinal centerline of the neck and pendulum are parallel.

(iv) The headform rotation shall be calculated by the following formula with the integration beginning at time zero:

$$\text{Headform rotation (deg)} = \int [(\text{Headform Angular Rate})_y - (\text{Pendulum Angular Rate})_y]\, dt$$

(v) $(\text{Headform Angular Rate})_y$ is the angular rate about the y-axis in deg/sec measured on the headform (drawing 020–9050, sheet 1), and $(\text{Pendulum Angular Rate})_y$ is the angular rate about the y-axis in deg/sec measured on the pendulum interface plate (drawing 020–9051) (incorporated by reference, see § 572.210).

(3) Neck torsion qualification test.

(i) The neck twist fixture (drawing DL210–200), referenced in Figure W5, shall rotate in the direction of pre-impact flight with respect to the pendulum's longitudinal centerline between 75 degrees and 93 degrees, as measured by the rotary potentiometer (drawing SA572–S51), and shall occur between 91 and 113 ms from time zero. The peak moment, measured by the neck transducer (drawing SA572–S8) shall have a value between 8 N-m (5.9 ft-lbf) and 10 N-m (7.4 ft-lbf) occurring between 85 and 105 ms from time zero) (all incorporated by reference, see § 572.210).

(ii) The decaying neck twist fixture rotation vs. time curve shall cross the zero angle with respect to its initial position at time of impact relative to the pendulum centerline between 84 to 103 ms after the time the peak rotation value is reached.

(iii) All instrumentation data channels are defined to be zero when the zero pins are installed such that the neck is not in torsion.

(iv) Time zero is defined as the time of initial contact between the pendulum striker plate and the honeycomb material. All data channels shall be at the zero level at this time.

(c) *Test procedure:* The test procedure for the neck assembly is as follows:

(1) Soak the neck assembly in a controlled environment at any temperature between 20.6 and 22.2 °C (69 and 72 °F) and a relative humidity between 10 and 70 percent for at least four hours prior to a test.

(2)(i) For the fore-aft neck flexion test, mount the neck and headform assembly, defined in subsection (a)(1) of this section, on the pendulum described in Figure 22 of 49 CFR 572 so that the midsagittal plane of the headform is vertical and coincides with the plane of motion of the pendulum, and with the neck placement such that the front side of the neck is closest to the honeycomb material.

(ii) For the lateral neck flexion test, the test is carried out in the direction opposing the primary load vector of the ensuing full scale test for which the dummy is being qualified. A right flexion test set-up that is used to qualify the dummy for an ensuing full scale right side impact is depicted in Figure W4. A left flexion test set-up would be a mirror image of that shown in Figure W4. Mount the neck and headform assembly, defined in subsection (a)(1) of this section, on the pendulum described in Figure 22 of 49 CFR 572 so that the midsagittal plane of the headform is vertical and coincides with the plane of motion of the pendulum, and with the neck placement such that the right (or left) side of the neck is closest to the honeycomb material.

(iii) For the neck torsion test, the test is carried out in the direction opposing the primary load vector of the ensuing full scale test for which the dummy is being qualified. A right torsion test set-up that is used to qualify the dummy for an ensuing full scale right side impact is depicted in Figure W5. A left flexion test set-up would be a mirror image of that shown in Figure W5. Mount the neck assembly, defined in subsection (a)(2) of this section, on the pendulum described in Figure 22 of 49 CFR 572, as shown in Figure W5 of this subpart.

(3)(i) Release the pendulum and allow it to fall freely from a height to achieve an impact velocity of 4.7 ± 0.1 m/s (15.6 ± 0.3 ft/s) for fore-aft flexion, 3.8 ± 0.05 m/s (12.5 ± 0.2 ft/s) for lateral flexion, and 3.6 ± 0.1 m/s (11.8 ± 0.3 ft/s) for torsion, measured by an accelerometer mounted on the pendulum as shown in Figure 22 of this Part 572 at time zero.

(ii) Stop the pendulum from the initial velocity with an acceleration vs. time pulse that meets the velocity change as specified in Table B of this section. Integrate the pendulum accelerometer data channel to obtain the velocity vs. time curve beginning at time zero.

TABLE B TO § 572.213

Time (ms)	Fore-aft flexion		Time (ms)	Lateral flexion		Time (ms)	Torsion	
	m/s	ft/s		m/s	ft/s		m/s	ft/s
10	1.1–2.1	3.6–6.9	10	1.7–2.2	5.6–7.2	10	0.9–1.3	3.0–4.3
20	2.8–3.8	9.2–12.5	15	2.5–3.0	8.2–9.8	15	1.4–2.0	4.6–6.6
30	4.1–5.1	13.5–16.7	20	3.4–3.9	11.2–12.8	20	2.0–2.6	6.6–8.5

§ 572.214 Shoulder assembly and test procedure.

(a) The shoulder assembly for this test consists of the torso assembly (drawing 020–4500) with string pot assembly (drawing SA572–S38 or SA572–S39) installed (incorporated by reference, see § 572.210).

(b) When the center of the shoulder of a completely assembled dummy (drawing 020–0100) (incorporated by reference, see § 572.210) is impacted laterally by a test probe conforming to § 572.219, at 3.6 ± 0.1 m/s (11.8 ± 0.3 ft/s) according to the test procedure in paragraph (c) of this section:

(1) Maximum lateral shoulder displacement (compression) relative to the spine, measured with the string pot assembly (drawing SA572–S38 or SA572–S39) (incorporated by reference, see § 572.210), must not be less than 16 mm (0.63 in) and not more than 21 mm (0.83 in). The peak force, measured by the impact probe as defined in § 572.219

and calculated in accordance with paragraph (b)(2) of this section, shall have a value between 1.24 kN (279 lbf) and 1.35 kN (303 lbf).

(2) The force shall be calculated by the product of the impactor mass and its measured deceleration.

(c) *Test procedure:* The test procedure for the shoulder assembly is as follows:

(1) The dummy is clothed in the Q3s suit (drawing 020–8001) (incorporated by reference, see § 572.210). No additional clothing or shoes are placed on the dummy.

(2) Soak the dummy in a controlled environment at any temperature between 20.6 and 22.2 °C (69 and 72 °F) and a relative humidity from 10 to 70 percent for at least four hours prior to a test.

(3) The shoulder test is carried out in the direction opposing the primary load vector of the ensuing full scale test for which the dummy is being qualified. A left shoulder test set-up that is used to qualify the dummy for an ensuing full scale left side impact is depicted in Figure W6. A right shoulder set-up would be a mirror image of that shown in Figure W6. Seat the dummy on the qualification bench described in Figure V3 of 49 CFR 572.194, the seat pan and seat back surfaces of which are covered with thin sheets of PTFE (Teflon) (nominal stock thickness: 2 to 3 mm) (3/32- to 1/8-inch) along the impact side of the bench.

(4) Position the dummy on the bench as shown in Figure W6, with the ribs making contact with the seat back oriented 24.6 degrees relative to vertical, the legs extended forward along the seat pan oriented 21.6 degrees relative to horizontal with the knees spaced 40 mm (1.57 in) apart, and the arms positioned so that the upper arms are parallel to the seat back (± 2 degrees) and the lower arms are perpendicular to the upper arms.

(5) The target point of the impact is a point on the shoulder that is 15 mm above and perpendicular to the midpoint of a line connecting the centers of the bolt heads of the two lower bolts (part #5000010) that connect the upper arm assembly (020–9750) to the shoulder ball retaining ring (020–3533).

(6) Impact the shoulder with the test probe so that at the moment of contact the probe's longitudinal centerline should be horizontal (± 1 degrees), and the centerline of the probe should be within 2 mm (0.08 in) of the target point.

(7) Guide the test probe during impact so that there is no significant lateral, vertical, or rotational movement.

(8) No suspension hardware, suspension cables, or any other attachments to the probe, including the velocity vane, shall make contact with the dummy during the test.

§ 572.215 Thorax with arm assembly and test procedure.

(a) The thorax assembly for this test consists of the torso assembly (drawing 020–4500) with IR–TRACC (drawing SA572–S37) (incorporated by reference, see § 572.210) installed.

(b) When the thorax of a completely assembled dummy (drawing 020–0100) (incorporated by reference, see § 572.210) is impacted laterally by a test probe conforming to § 572.219 at 5.0 ± 0.1 m/s (16.4 ± 0.3 ft/s) according to the test procedure in paragraph (c) of this section:

(1) Maximum lateral thorax displacement (compression) relative to the spine, measured with the IR–TRACC (drawing SA572–S37) and processed as set out in the PADI (all incorporated by reference, see § 572.210), shall have a value between 23 mm (0.91 in) and 28 mm (1.10 in). The peak force occurring after 5 ms, measured by the impact probe as defined in § 572.219 and calculated in accordance with paragraph (b)(2) of this section, shall have a value between 1.38 kN (310 lbf) and 1.69 kN (380 lbf).

(2) The force shall be calculated by the product of the impactor mass and its measured deceleration.

(3) Time zero is defined as the time of contact between the impact probe and the arm. All channels should be at a zero level at this point.

(c) *Test procedure:* The test procedure for the thorax with arm assembly is as follows:

(1) The dummy is clothed in the Q3s suit (drawing 020–8001) (incorporated by reference, see § 572.210). No additional clothing or shoes are placed on the dummy.

(2) Soak the dummy in a controlled environment at any temperature between 20.6 and 22.2 °C (69 and 72 °F) and a relative humidity from 10 to 70 percent for at least four hours prior to a test.

(3) The test is carried out in the direction opposing the primary load vector of the ensuing full scale test for which the dummy is being qualified. A left thorax test set-up that is used to qualify the dummy for an ensuing full scale left side impact is depicted in Figure W7. A right thorax set-up would be a mirror image of that shown in Figure W7. Seat the dummy on the qualification bench described in Figure V3 of 49 CFR 572.194, the seat pan and seat back surfaces of which are covered with thin sheets of PTFE (Teflon) (nominal stock thickness: 2 to 3 mm (3/32- to 1/8-inch)) along the impact side of the bench.

(4) Position the dummy on the bench as shown in Figure W7, with the ribs making contact with the seat back oriented 24.6 degrees relative to vertical, the legs extended forward along the seat pan oriented 21.6 degrees relative to horizontal with the knees spaced 40 mm (1.57 in) apart. On the non-impact side of the dummy, the long axis of the upper arm is positioned parallel to the seat back (± 2 degrees). On the impact side, the upper arm is positioned such that the target point intersects its long axis as described in (5) below. The long axis of the upper arm is defined by section line A–A in drawing 020–9750 (incorporated by reference, see § 572.210). Both of the lower arms are set perpendicular to the upper arms.

(5) The target point of the impact is the point of intersection on the lateral aspect of the upper arm and a line projecting from the thorax of the dummy. The projecting line is horizontal, runs parallel to the coronal plane of the dummy, and passes through the midpoint of a line connecting the centers of the bolt heads of the two IR–TRACC bolts (part #5000646). The projected line should intersect the upper arm within 2 mm (0.80 in) of its long axis.

(6) Impact the arm with the test probe so that at the moment of contact the probe's longitudinal centerline should be horizontal (± 1 degrees), and the centerline of the probe should be within 2 mm (0.80 in) of the target point.

(7) Guide the test probe during impact so that there is no significant lateral, vertical, or rotational movement.

(8) No suspension hardware, suspension cables, or any other attachments to the probe, including the velocity vane, shall make contact with the dummy during the test.

§ 572.216 Thorax without arm assembly and test procedure.

(a) The thorax assembly for this test consists of the torso assembly (drawing 020–4500) with IR–TRACC (drawing SA572–S37) (incorporated by reference, see § 572.210) installed.

(b) When the thorax of a completely assembled dummy (drawing 020–0100) with the arm (drawing 020–9700 or 020–9800) on the impacted side removed is impacted laterally by a test probe conforming to § 572.219 at 3.3 ± 0.1 m/s (10.8 ± 0.3 ft/s) according to the test procedure in paragraph (c) of this section:

(1) Maximum lateral thorax displacement (compression) relative to

the spine, measured with the IR–TRACC (drawing SA572–S37) and processed as set out in the PADI (all incorporated by reference, see § 572.210), shall have a value between 24 mm (0.94 in) and 31 mm (1.22 in). The peak force, measured by the impact probe as defined in § 572.219 and calculated in accordance with paragraph (b)(2) of this section, shall have a value between 620 N (139 lbf) and 770 N (173 lbf).

(2) The force shall be calculated by the product of the impactor mass and its measured deceleration.

(c) *Test procedure:* The test procedure for the thorax without arm assembly is as follows:

(1) The dummy is clothed in the Q3s suit (drawing 020–8001) (incorporated by reference, see § 572.210). No additional clothing or shoes are placed on the dummy.

(2) Soak the dummy in a controlled environment at any temperature between 20.6 and 22.2 °C (69 and 72 °F) and a relative humidity from 10 to 70 percent for at least four hours prior to a test.

(3) The test is carried out in the direction opposing the primary load vector of the ensuing full scale test for which the dummy is being qualified. A left thorax test set-up that is used to qualify the dummy for an ensuing full scale left side impact is depicted in Figure W8. A right thorax set-up would be a mirror image of that shown in Figure W8. Seat the dummy on the qualification bench described in Figure V3 of 49 CFR 572.194, the seat pan and seat back surfaces of which are covered with thin sheets of PTFE (Teflon) (nominal stock thickness: 2 to 3 mm (3/32- to 1/8-inch)) along the impact side of the bench.

(4) Position the dummy on the bench as shown in Figure W8, with the ribs making contact with the seat back oriented 24.6 degrees relative to vertical, the legs extended forward along the seat pan oriented 21.6 degrees relative to horizontal with the knees spaced 40 mm (1.57 in) apart, and the arm on the non-impacted side positioned so that the upper arm is parallel (± 2 degrees) to the seat back and the lower arm perpendicular to the upper arm.

(5) The target point of the impact is the midpoint of a line between the centers of the bolt heads of the two IR–TRACC bolts (part #5000646).

(6) Impact the thorax with the test probe so that at the moment of contact the probe's longitudinal centerline should be horizontal (± 1 degrees), and the centerline of the probe should be within 2 mm (0.08 in) of the target point.

(7) Guide the test probe during impact so that there is no significant lateral, vertical, or rotational movement.

(8) No suspension hardware, suspension cables, or any other attachments to the probe, including the velocity vane, shall make contact with the dummy during the test.

§ 572.217 Lumbar spine assembly and test procedure.

(a) The lumbar spine and headform assembly (refer to § 572.210(b)(2)(iv) and § 572.210(a)(2)(vii)) for the purposes of the fore-aft lumbar flexion and lateral lumbar flexion qualification tests, as shown in Figures W9 and W10, consists of the headform (drawing 020–9050, sheet 2) with angular rate sensor installed (drawing SA572–S58), six-channel neck/lumbar load cell (drawing SA572–S8), lumbar spine assembly (drawing 020–6000), lumbar interface plate (drawing 020–9062) and pendulum interface plate (drawing 020–9051) with angular rate sensor installed (drawing SA572–S58) (all incorporated by reference, see § 572.210).

(b) When the lumbar spine and headform assembly is tested according to the test procedure in paragraph (c) of this section, it shall have the following characteristics:

(1) Fore-aft lumbar flexion qualification test.

(i) Plane D, referenced in Figure W9, shall rotate in the direction of pre-impact flight with respect to the pendulum's longitudinal centerline between 48 degrees and 57 degrees, which shall occur between 52 and 59 ms from time zero. The peak moment, measured by the neck/lumbar transducer (drawing SA572–S8) (incorporated by reference, see § 572.210) shall have a value between 78 N-m (57.5 ft-lbf) and 94 N-m (69.3 ft-lbf) occurring between 46 and 57 ms from time zero.

(ii) The decaying headform rotation vs. time curve shall cross the zero angle with respect to its initial position at time of impact relative to the pendulum centerline between 50 to 56 ms after the time the peak rotation value is reached.

(iii) All instrumentation data channels are defined to be zero when the longitudinal centerline of the lumbar spine and pendulum are parallel.

(iv) The headform rotation shall be calculated by the following formula with the integration beginning at time zero:

$$\text{Headform rotation (deg)} = \int [(\text{Headform Angular Rate})_y - (\text{Pendulum Angular Rate})_y]\, dt$$

(v) $(\text{Headform Angular Rate})_y$ is the angular rate about the y-axis in deg/sec measured on the headform (drawing 020–9050, sheet 2), and $(\text{Pendulum Angular Rate})_y$ is the angular rate about the y-axis in deg/sec measured on the pendulum interface plate (drawing 020–9051) (all incorporated by reference, see § 572.210).

(2) Lateral lumbar flexion qualification test.

(i) Plane D, referenced in Figure W10, shall rotate in the direction of pre-impact flight with respect to the pendulum's longitudinal centerline between 47 degrees and 59 degrees, which shall occur between 50 and 59 ms from time zero. The peak moment, measured by the neck/lumbar transducer (drawing SA572–S8) (incorporated by reference, see § 572.210) shall have a value between 78 N-m (57.5 ft-lbf) and 97 N-m (71.5 ft-lbf) occurring between 46 and 57 ms from time zero.

(ii) The decaying headform rotation vs. time curve shall cross the zero angle with respect to its initial position at time of impact relative to the pendulum centerline between 47 to 59 ms after the time the peak rotation value is reached.

(iii) All instrumentation data channels are defined to be zero when the longitudinal centerline of the lumbar spine and pendulum are parallel.

(iv) The headform rotation shall be calculated by the following formula with the integration beginning at time zero:

$$\text{Headform rotation (deg)} = \int [(\text{Headform Angular Rate})_y - (\text{Pendulum Angular Rate})_y]\, dt$$

(v) $(\text{Headform Angular Rate})_y$ is the angular rate about the y-axis in deg/sec measured on the headform (drawing 020–9050, sheet 2), and $(\text{Pendulum Angular Rate})_y$ is the angular rate about the y-axis in deg/sec measured on the pendulum interface plate (drawing 020–9051) (all incorporated by reference, see § 572.210).

(c) *Test procedure:* The test procedure for the lumbar spine assembly is as follows:

(1) Soak the lumbar spine assembly in a controlled environment at any temperature between 20.6 and 22.2 °C (69 and 72 °F) and a relative humidity between 10 and 70 percent for at least four hours prior to a test.

(2)(i) For the fore-aft lumbar flexion test, mount the lumbar spine and headform assembly, defined in subsection (a) of this section, on the pendulum described in Figure 22 of 49 CFR 572 so that the midsagittal plane of the headform is vertical and coincides with the plane of motion of the pendulum, and with the lumbar spine placement such that the front side of the lumbar spine is closest to the honeycomb material.

(ii) For the lateral lumbar flexion test, the test is carried out in the direction opposing the primary load vector of the ensuing full scale test for which the dummy is being qualified. A right flexion test set-up that is used to qualify the dummy for an ensuing a full scale right side impact is depicted in Figure W10. A left flexion test set-up would be a mirror image of that shown in Figure W10. Mount the lumbar spine and headform assembly, defined in subsection (a)(1) of this section, on the pendulum described in Figure 22 of 49 CFR 572 so that the midsagittal plane of the headform is vertical and coincides with the plane of motion of the pendulum, and with the lumbar spine placement such that the right (or left) side of the lumbar spine is closest to the honeycomb material.

(3)(i) Release the pendulum and allow it to fall freely from a height to achieve an impact velocity of 4.4 ± 0.1 m/s (14.4 ± 0.3 ft/s), measured by an accelerometer mounted on the pendulum as shown in Figure 22 of this Part 572 at time zero.

(ii) Stop the pendulum from the initial velocity with an acceleration vs. time pulse that meets the velocity change as specified in Table C of this section. Integrate the pendulum accelerometer data channel to obtain the velocity vs. time curve beginning at time zero.

TABLE C TO § 572.217

Time (ms)	Fore-aft flexion		Lateral flexion	
	m/s	ft/s	m/s	ft/s
10	1.3–1.7	4.3–5.6	1.3–1.7	4.3–5.6
20	2.7–3.7	8.9–12.1	2.7–3.7	8.9–12.1
30	4.1–4.9	13.5–16.1	4.0–4.8	13.1–15.7

§ 572.218 Pelvis assembly and test procedure.

(a) The pelvis assembly (drawing 020–7500) for this test includes a uniaxial pubic load cell (drawing SA572–S7) installed on the non-impact side of the pelvis (all incorporated by reference, see § 572.210).

(b) When the center of the pelvis of a completely assembled dummy (drawing 020–0100) (incorporated by reference, see § 572.210) is impacted laterally by a test probe conforming to § 572.219 at 4.0 ± 0.1 m/s (13.1 ± 0.3 ft/s) according to the test procedure in paragraph (c) of this section:

(1) Maximum pubic load, measured with the uniaxial pubic load cell (drawing SA572–S7) (incorporated by reference, see § 572.210), shall have a value between 700 N (157 lbf) and 870 N (196 lbf). The peak force, measured by the impact probe as defined in § 572.219 and calculated in accordance with paragraph (b)(2) of this section, shall have a value between 1.57 kN (353 lbf) and 1.81 kN (407 lbf).

(2) The force shall be calculated by the product of the impactor mass and its measured deceleration.

(c) *Test procedure:* The test procedure for the pelvis assembly is as follows:

(1) The dummy is clothed in the Q3s suit (drawing 020–8001) (incorporated by reference, see § 572.210). No additional clothing or shoes are placed on the dummy.

(2) Soak the dummy in a controlled environment at any temperature between 20.6 and 22.2 °C (69 and 72 °F) and a relative humidity from 10 to 70 percent for at least four hours prior to a test.

(3) The pelvis test is carried out in the direction opposing the primary load vector of the ensuing full scale test for which the dummy is being qualified. A left pelvis test set-up that is used to qualify the dummy for an ensuing full scale left side impact is depicted in Figure W11. A right pelvis test set-up would be a mirror image of that shown in Figure W11. Seat the dummy on the qualification bench described in Figure V3 of 49 CFR 572.194, the seat pan and seat back surfaces of which are covered with thin sheets of PTFE (Teflon) (nominal stock thickness: 2 to 3 mm (3/32- to 1/8-inch)) along the impact side of the bench.

(4) Position the dummy on the bench as shown in Figure W11, with the ribs making contact with the seat back oriented 24.6 degrees relative to vertical, the legs extended forward along the seat pan oriented 21.6 degrees relative to horizontal with the knees spaced 40 mm (1.57 in) apart. The arms should be positioned so that the arm on the non-impacted side is parallel to the seat back with the lower arm perpendicular to the upper arm, and the arm on the impacted side is positioned upwards away from the pelvis.

(5) Establish the impact point at the center of the pelvis so that the impact point of the longitudinal centerline of the probe is located 185 mm (7.28 in) from the center of the knee pivot screw (part #020–9008) and centered vertically on the femur.

(6) Impact the pelvis with the test probe so that at the moment of contact the probe's longitudinal centerline should be horizontal (± 1 degrees), and the centerline of the probe should be within 2 mm (0.08 in) of the center of the pelvis.

(7) Guide the test probe during impact so that there is no significant lateral, vertical, or rotational movement.

(8) No suspension hardware, suspension cables, or any other attachments to the probe, including the velocity vane, shall make contact with the dummy during the test.

§ 572.219 Test conditions and instrumentation.

(a) The following test equipment and instrumentation is needed for qualification as set forth in this subpart:

(1) The test probe for shoulder, thorax, and pelvis impacts is of rigid metallic construction, concentric in shape, and symmetric about its longitudinal axis. It has a mass of 3.81 ± 0.02 kg (8.40 ± 0.04 lb) and a minimum mass moment of inertia of 560 kg-cm^2 (0.407 lbf-in-sec^2) in yaw and pitch about the CG. One-third (1/3) of the weight of the suspension cables and their attachments to the impact probe is included in the calculation of mass, and such components may not exceed five percent of the total weight of the test probe. The impacting end of the probe, perpendicular to and concentric with the longitudinal axis, is at least 25.4 mm (1.0 in) long, and has a flat, continuous, and non-deformable 70.0 ± 0.25 mm (2.76 ± 0.01 in) diameter face with an edge radius between 6.4–12.7 mm (0.25 to 0.5 in). The probe's end opposite to the impact face has provisions for mounting of an accelerometer with its sensitive axis collinear with the longitudinal axis of the probe. No concentric portions of the impact probe may exceed the diameter of the impact face. The impact probe shall have a free air resonant frequency of not less than 1000 Hz, which may be determined using the procedure listed in the PADI.

(2) Head accelerometers have dimensions, response characteristics,

and sensitive mass locations specified in drawing SA572–S4 and are mounted in the head as shown in drawing 020–0100, sheet 2 of 5 (incorporated by reference, see § 572.210).

(3) The upper neck force and moment transducer has the dimensions, response characteristics, and sensitive axis locations specified in drawing SA572–S8 and is mounted in the head-neck assembly as shown in drawing 020–0100, sheet 2 of 5 (incorporated by reference, see § 572.210).

(4) The angular rate sensors for the fore-aft neck flexion and lateral neck flexion qualification tests have the dimensions and response characteristics specified in drawing SA572–S58 (incorporated by reference, see § 572.210) and are mounted in the headform and on the pendulum as shown in Figures W3, W4 of this subpart.

(5) The string pot shoulder deflection transducers have the dimensions and response characteristics specified in drawing SA572–S38 or SA572–S39 and are mounted to the torso assembly as shown in drawing 020–0100, sheet 2 of 5 (all incorporated by reference, see § 572.210).

(6) The IR–TRACC thorax deflection transducers have the dimensions and response characteristics specified in drawing SA572–S37 and are mounted to the torso assembly as shown in drawing 020–0100, sheet 2 of 5 (incorporated by reference, see § 572.210).

(7) The lumbar spine force and moment transducer has the dimensions, response characteristics, and sensitive axis locations specified in drawing SA572–S8 and is mounted in the torso assembly as shown in drawing 020–0100, sheet 2 of 5 (incorporated by reference, see § 572.210).

(8) The angular rate sensors for the fore-aft lumbar flexion and lateral lumbar flexion qualification tests have the dimensions and response characteristics specified in drawing SA572–S58 (incorporated by reference, see § 572.210) and are mounted in the headform and on the pendulum as shown in Figures W9, W10 of this subpart.

(9) The pubic force transducers have the dimensions and response characteristics specified in drawing SA572–S7 and are mounted in the torso assembly as shown in drawing 020–0100, sheet 2 of 5 (incorporated by reference, see § 572.210).

(b) The following instrumentation may be required for installation in the dummy for compliance testing. If so, it is installed during qualification procedures as described in this subpart:

(1) The optional angular rate sensors for the head have the dimensions and response characteristics specified in any of drawings SA572–S55, SA572–S56, SA572–S57 or SA572–S58 and are mounted in the head as shown in drawing 020–0100, sheet 2 of 5 (all incorporated by reference, see § 572.210).

(2) The upper spine accelerometers have the dimensions, response characteristics, and sensitive mass locations specified in drawing SA572–S4 and are mounted in the torso assembly as shown in drawing 020–0100, sheet 2 of 5 (all incorporated by reference, see § 572.210).

(3) The pelvis accelerometers have the dimensions, response characteristics, and sensitive mass locations specified in drawing SA572–S4 and are mounted in the torso assembly as shown in drawing 020–0100, sheet 2 of 5 (all incorporated by reference, see § 572.210).

(4) The T1 accelerometer has the dimensions, response characteristics, and sensitive mass location specified in drawing SA572–S4 and is mounted in the torso assembly as shown in drawing 020–0100, sheet 2 of 5 (incorporated by reference, see § 572.210).

(5) The lower neck force and moment transducer has the dimensions, response characteristics, and sensitive axis locations specified in drawing SA572–S8 and is mounted to the neck assembly as shown in drawing 020–0100, sheet 2 of 5 (incorporated by reference, see § 572.210).

(6) The tilt sensor has the dimensions and response characteristics specified in drawing SA572–S44 and is mounted to the torso assembly as shown in drawing 020–0100, sheet 2 of 5 (incorporated by reference, see § 572.210).

(c) The outputs of transducers installed in the dummy and in the test equipment specified by this part are to be recorded in individual data channels that conform to SAE Recommended Practice J211 (incorporated by reference, see § 572.210) except as noted, with channel frequency classes as follows:

(1) Pendulum acceleration, CFC 180,

(2) Pendulum angular rate, CFC 60,

(3) Neck twist fixture rotation, CFC 60,

(4) Test probe acceleration, CFC 180,

(5) Head accelerations, CFC 1000,

(6) Headform angular rate, CFC 60,

(7) Neck moments, upper and lower, CFC 600,

(7) Shoulder deflection, CFC 180,

(8) Thorax deflection, CFC 180,

(9) Upper spine accelerations, CFC 180,

(10) T1 acceleration, CFC 180,

(11) Pubic force, CFC 180,

(12) Pelvis accelerations, CFC 1000.

(d) Coordinate signs for instrumentation polarity are to conform to SAE Information Report J1733 (incorporated by reference, see § 572.210).

(e) The mountings for sensing devices have no resonant frequency less than 3 times the frequency range of the applicable channel class.

(f) Limb joints are set at one G, barely restraining the weight of the limb when it is extended horizontally. The force needed to move a limb segment is not to exceed 2G throughout the range of limb motion.

(g) Performance tests of the same component, segment, assembly, or fully assembled dummy are separated in time by not less than 30 minutes unless otherwise noted.

(h) Surfaces of dummy components may not be painted except as specified in this subpart or in drawings subtended by this subpart.

BILLING CODE 4910–59–P

Appendix—Figures to Subpart W of Part 572

Figure W1

FRONTAL HEAD DROP TEST SET-UP SPECIFICATIONS

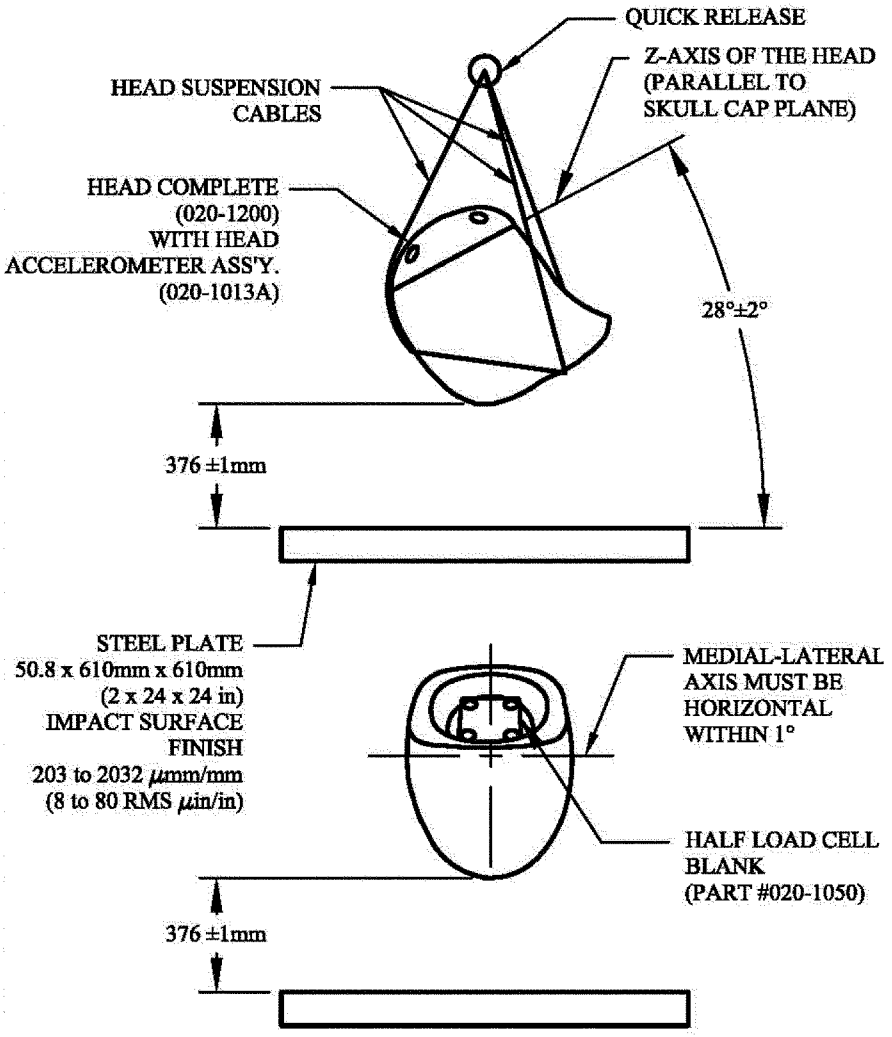

Figure W2

LATERAL HEAD DROP TEST SET-UP SPECIFICATIONS

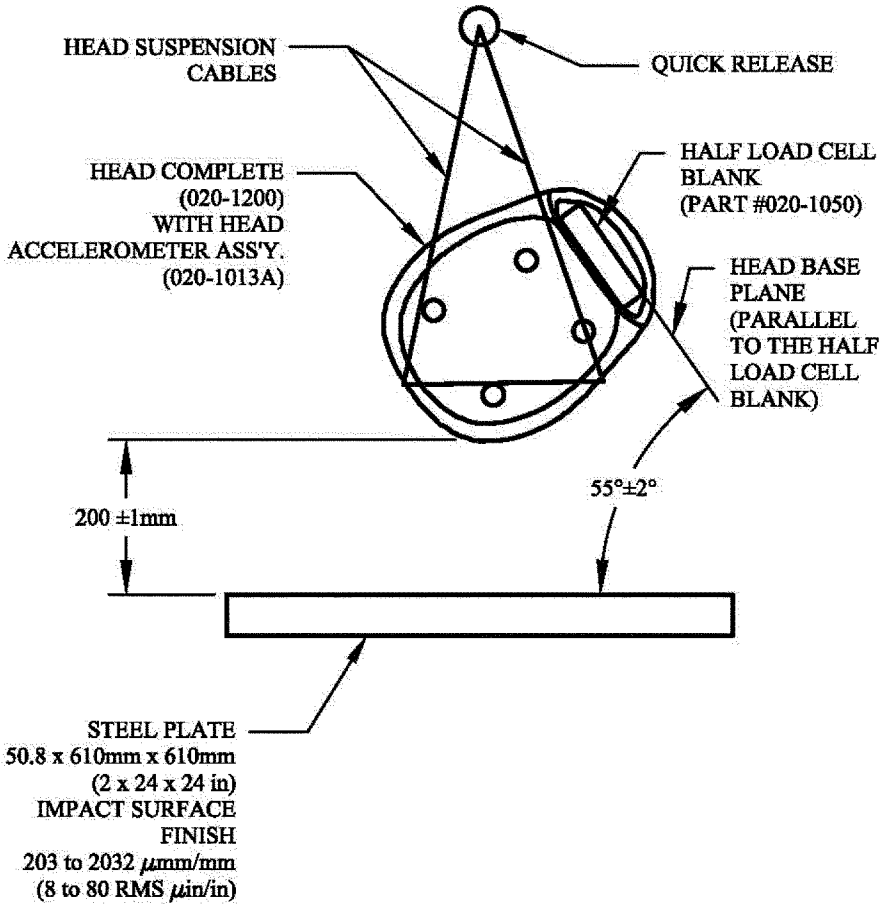

Figure W3

NECK FRONTAL FLEXION TEST SPECIFICATIONS

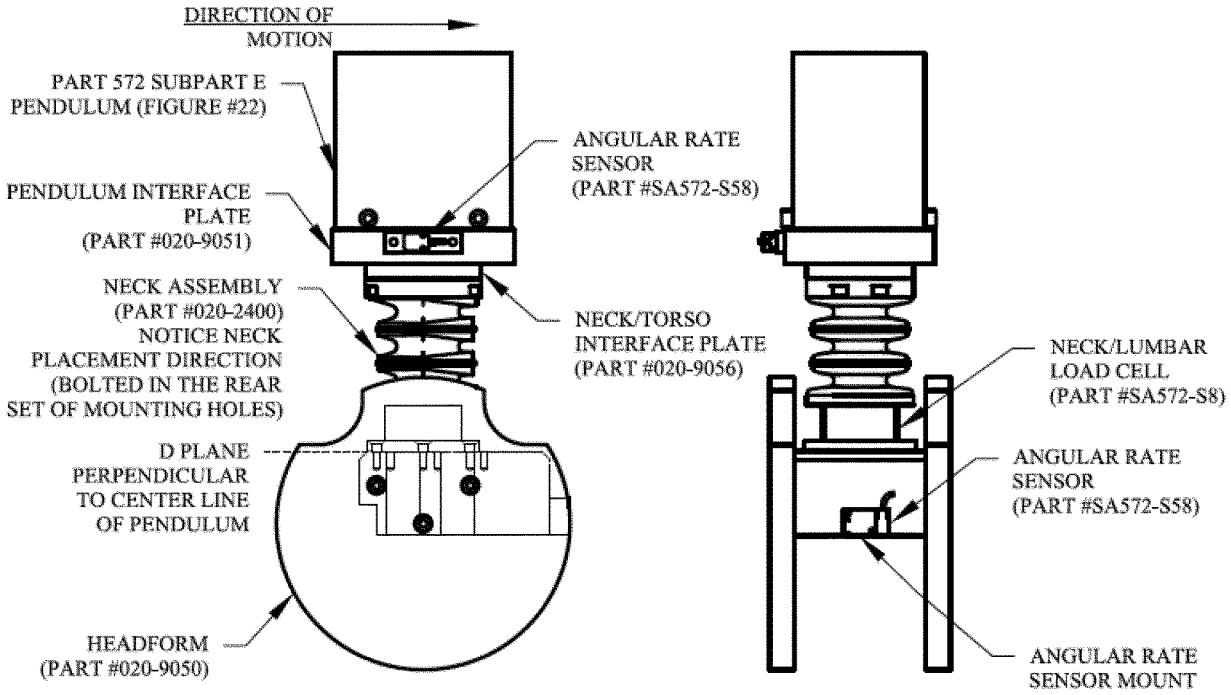

Figure W4

NECK LATERAL FLEXION TEST SPECIFICATIONS

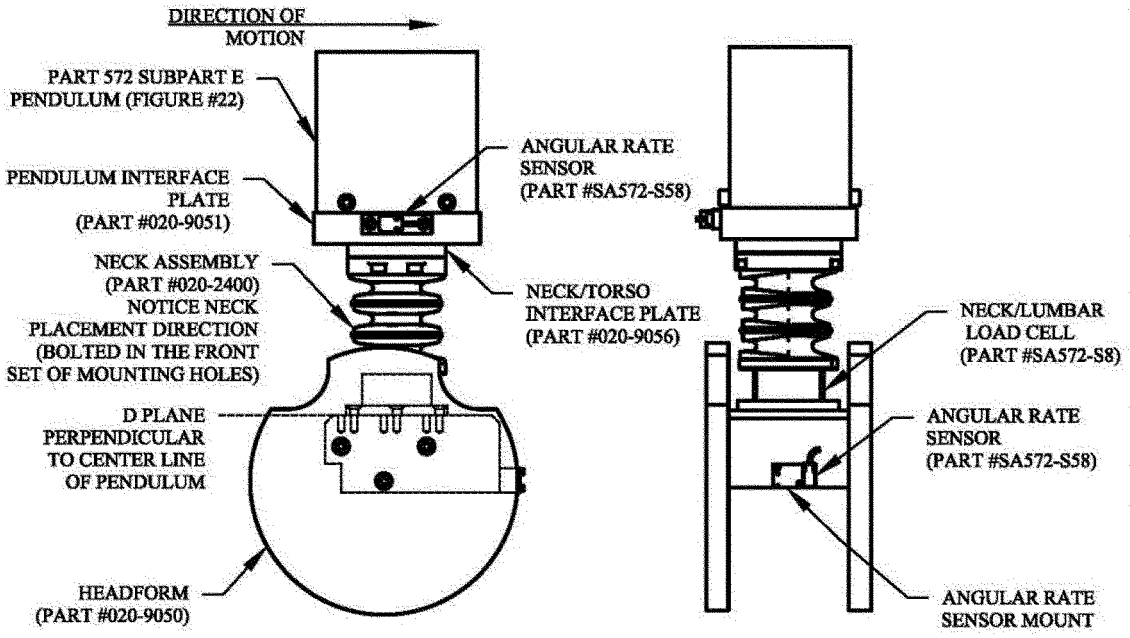

Figure W5

NECK TORSION TEST SPECIFICATIONS

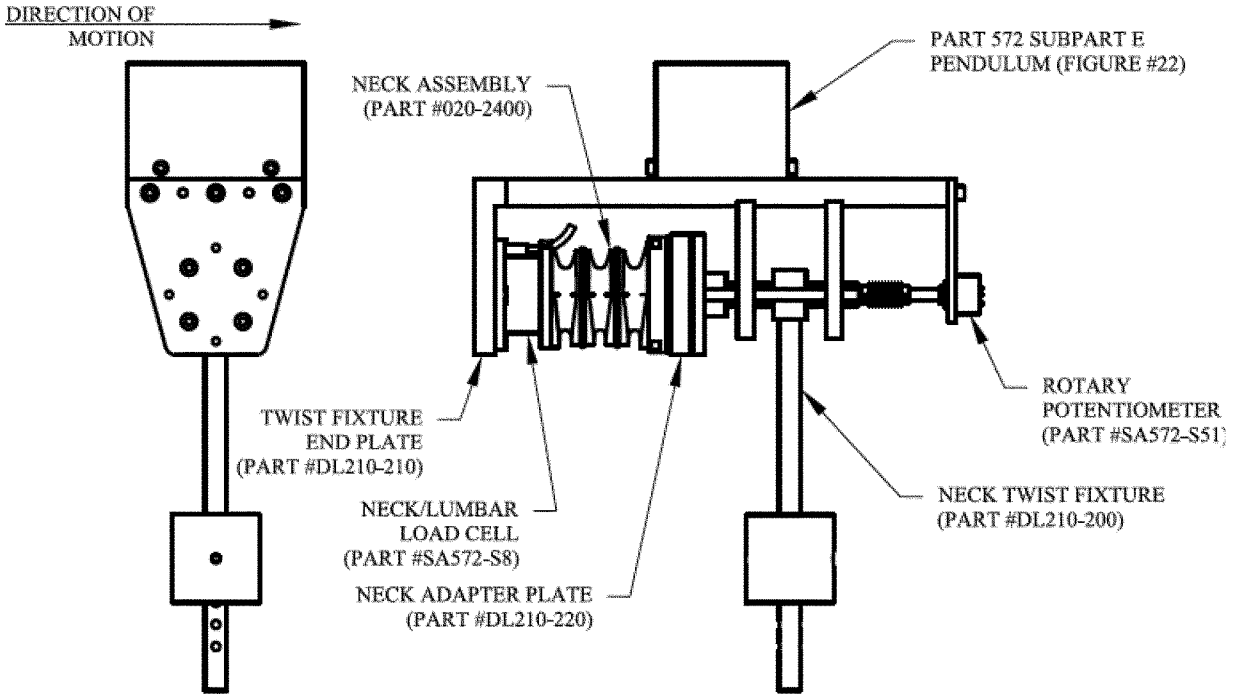

Figure W6

LATERAL SHOULDER IMPACT

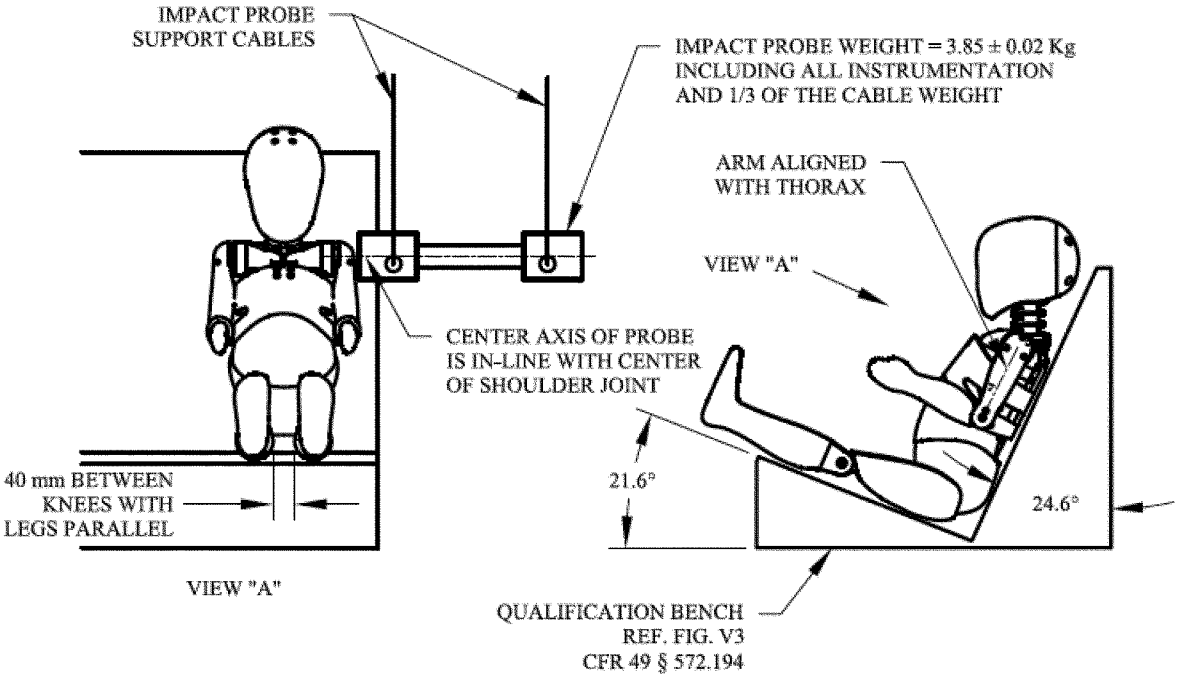

Figure W7

LATERAL THORAX IMPACT - WITH ARM

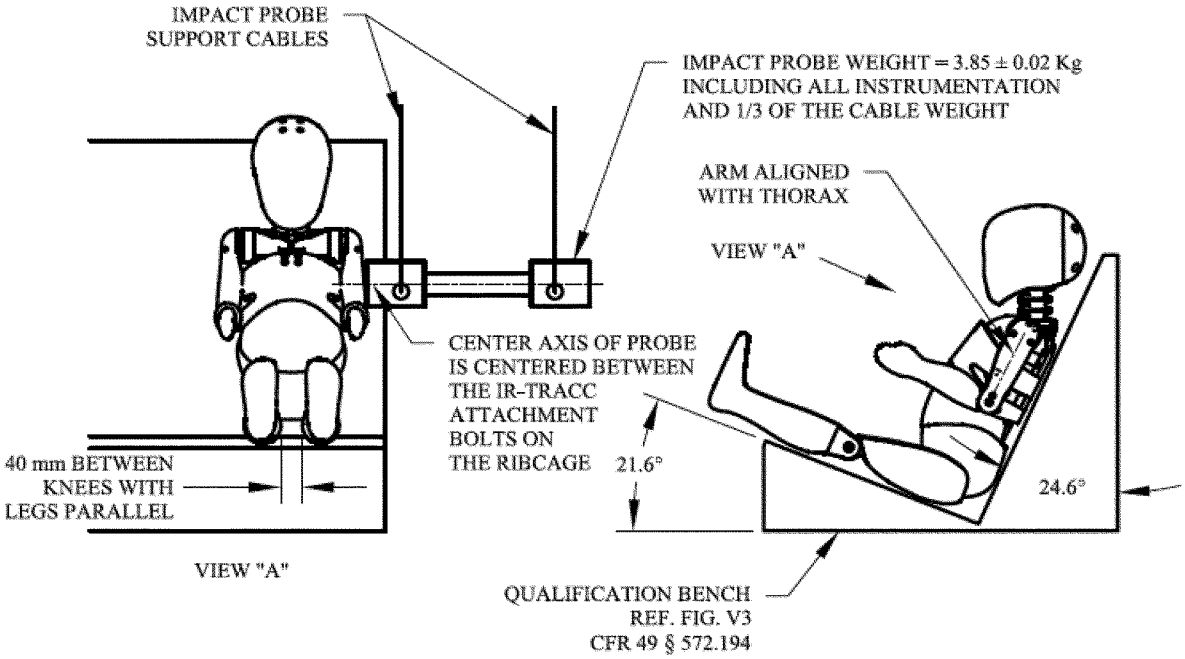

Figure W8

LATERAL THORAX IMPACT - WITHOUT ARM

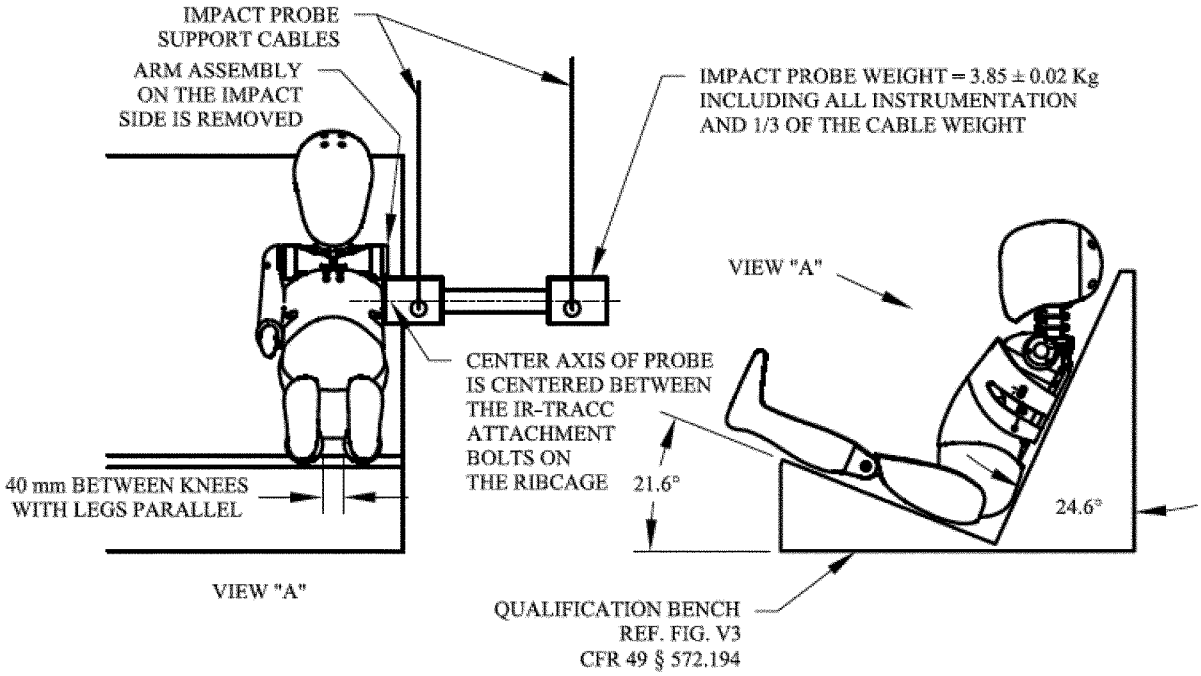

Figure W9

LUMBAR FRONTAL FLEXION TEST SPECIFICATIONS

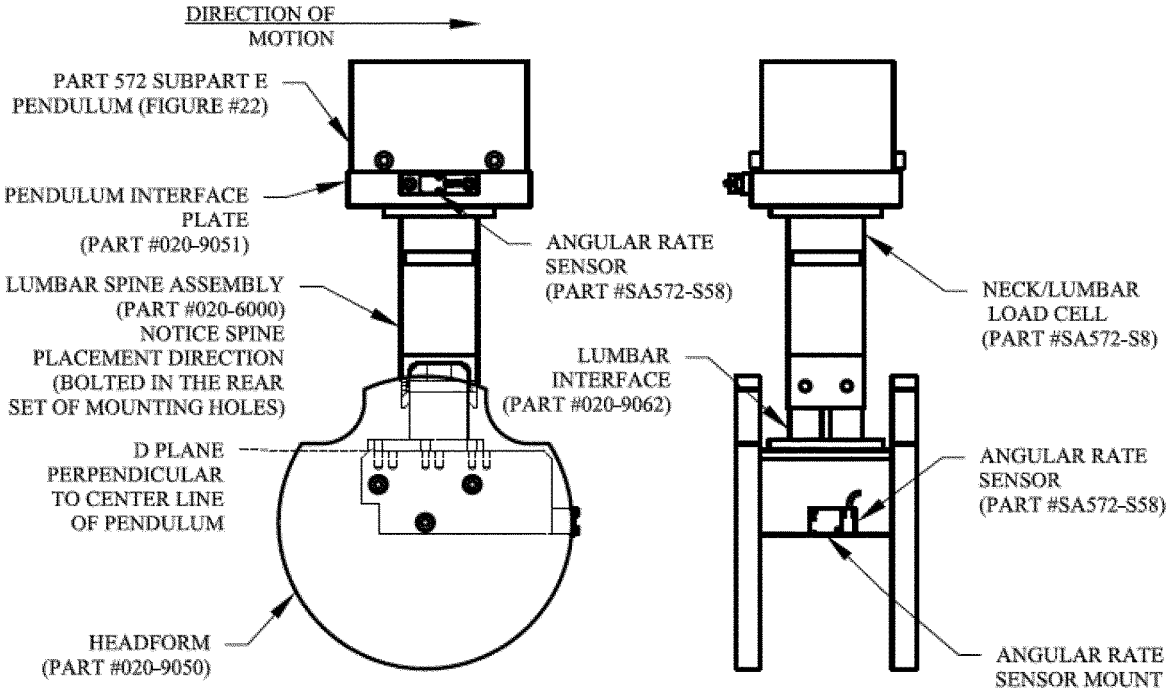

Figure W10

LUMBAR LATERAL FLEXION TEST SPECIFICATIONS

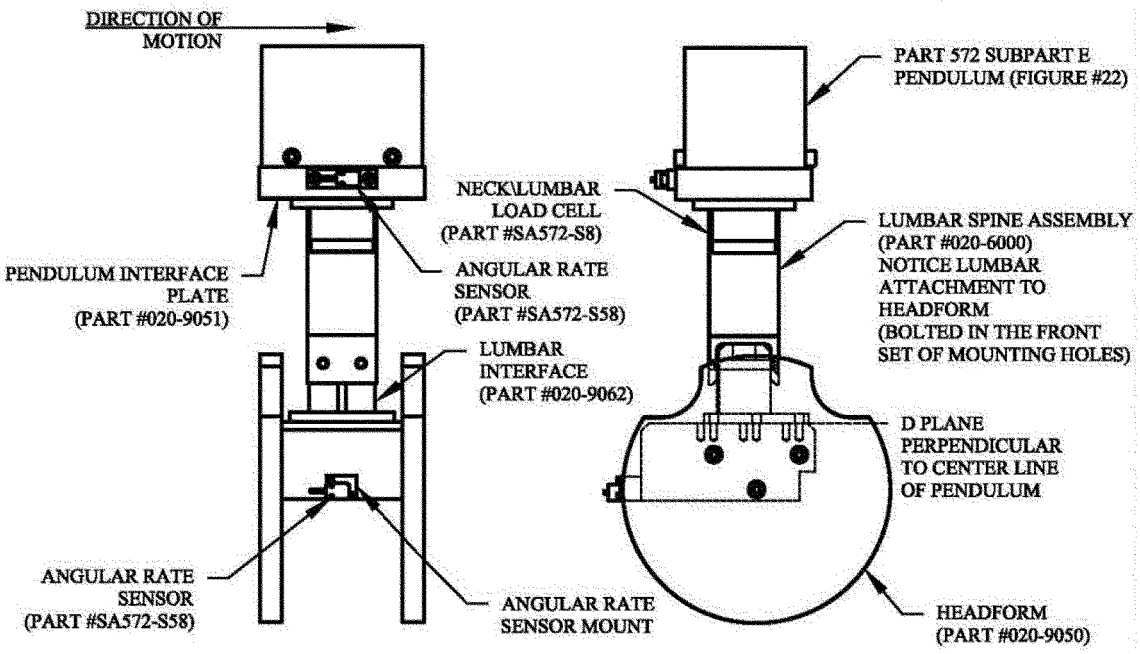

Figure W11
LATERAL PELVIS IMPACT

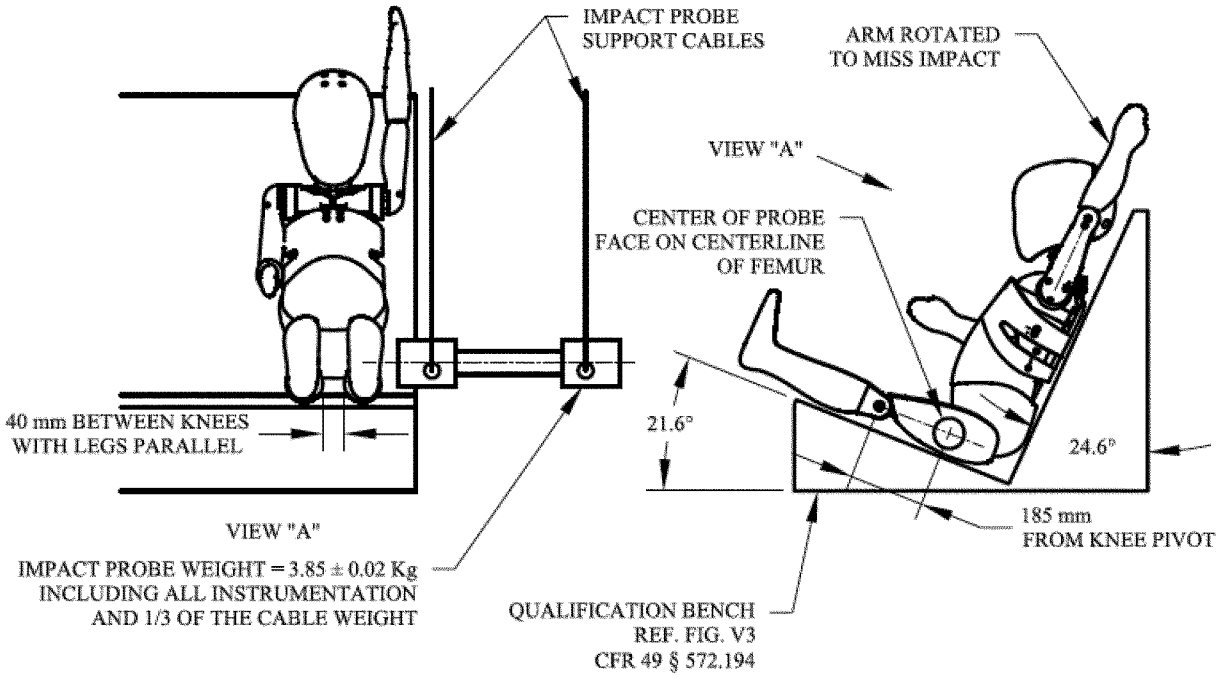

Issued on: November 8, 2013.

Christopher J. Bonanti,

Associate Administrator for Rulemaking.

[FR Doc. 2013–27438 Filed 11–20–13; 8:45 am]

BILLING CODE 4910–59–C

Reader Aids

Federal Register

Vol. 78, No. 225

Thursday, November 21, 2013

CUSTOMER SERVICE AND INFORMATION

Federal Register/Code of Federal Regulations	
General Information, indexes and other finding aids	**202–741–6000**
Laws	**741–6000**
Presidential Documents	
Executive orders and proclamations	**741–6000**
The United States Government Manual	**741–6000**
Other Services	
Electronic and on-line services (voice)	**741–6020**
Privacy Act Compilation	**741–6064**
Public Laws Update Service (numbers, dates, etc.)	**741–6043**
TTY for the deaf-and-hard-of-hearing	**741–6086**

ELECTRONIC RESEARCH

World Wide Web

Full text of the daily Federal Register, CFR and other publications is located at: **www.fdsys.gov.**

Federal Register information and research tools, including Public Inspection List, indexes, and Code of Federal Regulations are located at: **www.ofr.gov.**

E-mail

FEDREGTOC-L (Federal Register Table of Contents LISTSERV) is an open e-mail service that provides subscribers with a digital form of the Federal Register Table of Contents. The digital form of the Federal Register Table of Contents includes HTML and PDF links to the full text of each document.

To join or leave, go to **http://listserv.access.gpo.gov** and select *Online mailing list archives, FEDREGTOC-L, Join or leave the list (or change settings);* then follow the instructions.

PENS (Public Law Electronic Notification Service) is an e-mail service that notifies subscribers of recently enacted laws.

To subscribe, go to **http://listserv.gsa.gov/archives/publaws-l.html** and select *Join or leave the list (or change settings);* then follow the instructions.

FEDREGTOC-L and **PENS** are mailing lists only. We cannot respond to specific inquiries.

Reference questions. Send questions and comments about the Federal Register system to: **fedreg.info@nara.gov**

The Federal Register staff cannot interpret specific documents or regulations.

Reminders. Effective January 1, 2009, the Reminders, including Rules Going Into Effect and Comments Due Next Week, no longer appear in the Reader Aids section of the Federal Register. This information can be found online at **http://www.regulations.gov.**

CFR Checklist. Effective January 1, 2009, the CFR Checklist no longer appears in the Federal Register. This information can be found online at **http://bookstore.gpo.gov/.**

FEDERAL REGISTER PAGES AND DATE, NOVEMBER

65515–65868 1
65869–66248 4
66249–66620 5
66621–66824 6
66825–66994 7
66995–67288 8
67289–67924 12
67925–68324 13
68325–68686 14
68687–68980 15
68981–69284 18
69285–69534 19
69535–69752 20
69753–69982 21

CFR PARTS AFFECTED DURING NOVEMBER

At the end of each month the Office of the Federal Register publishes separately a List of CFR Sections Affected (LSA), which lists parts and sections affected by documents published since the revision date of each title.

1 CFR

Proposed Rules:
51 .....69006, 69594

3 CFR

Proclamations:
9047 66605
9048 66607
9049 66609
9050 66611
9051 66613
9052 66615
9053 66617
9054 66619
9055 67287
9056 68325
9057 69533
9058 69751

Executive Orders:
13653 66819

Administrative Orders:
Notices:
Notice of October 30, 2013 65867
Notice of November 7, 2013 67289
Notice of November 12, 2013 68323

5 CFR

733 66825
850 68981

Proposed Rules:
1201 67076

6 CFR

1001 66995
1002 66995
1003 66995

7 CFR

27 68983
271 65515
274 65515
319 69285
761 65523
762 65523
765 65523
766 65523
772 65523
1726 69286

Proposed Rules:
245 65890
905 67977
1211 .....67979, 68298
3550 65582

8 CFR

Proposed Rules:
214 69778

9 CFR

94 68327
317 66826
318 66826
320 66826
327 66826
331 66826
381 66826
412 66826
424 66826

10 CFR

95 69286
430 68331
770 67295

Proposed Rules:
2 66660
40 .....67224, 67225
50 68774
51 .....65903, 66858
55 68774
70 .....67224, 67225
72 .....67224, 67225
74 .....67224, 67225
150 .....67224, 67225
429 .....66202, 67319
430 66202
431 66202

12 CFR

204 66249
652 65541
1002 69753
1005 .....66251, 69753
1024 .....68343, 69753
1026 69753
1267 67004
1269 67004
1270 67004

Proposed Rules:
380 66661
702 65583
1006 67848

14 CFR

21 68687
25 .....67291, 68985, 68986
34 65554
39 .....65869, 65871, 66252, 66254, 66258, 67009, 67011, 67013, 67015, 67018, 67020, 67022, 68345, 68347, 68352, 68355, 68357, 68360, 68688, 68691, 68693, 68697
45 65554
61 66261
71 .....65554, 65555, 65556, 67024, 67292, 67293, 67294, 67295, 67296, 67297, 67298, 67299, 68699
91 68360
95 68699
97 .....68702, 68704
117 69287
121 .....67800, 69287

382.....67882, 67918
399.....67882
Proposed Rules:
Ch. I.....69789
25 .....66317, 67077, 67320, 67321, 67323, 68775
39 .....66666, 66668, 66859, 66861, 69316, 69318, 69320, 69594, 69595, 69597, 69600, 69785
71 .....67324, 68777, 69787
121.....67983
135.....66865
1260.....68375, 68376
1273.....68375
1274.....68375, 68376

15 CFR

30.....67927
400.....69288
748.....69535

16 CFR

1.....65557
254.....68987
801.....68705
1500.....66840
Proposed Rules:
1115.....69793

17 CFR

1.....68506
3.....68506
15.....69178
17.....69178
18.....69178
20.....69178
22.....68506
23.....66621
30.....68506
140.....68506
190.....66621
200.....67468
240.....67468
249.....67468
Proposed Rules:
150.....68946
170.....67078, 67985
200.....66428
227.....66428
232.....66428
239.....66428
240.....66428
249.....66428
300.....66318

19 CFR

Proposed Rules:
351.....69322

20 CFR

404.....66638
416.....66638
655 .....69538, 69539, 69541
Proposed Rules:
404.....69324

21 CFR

1.....69543
73.....68713
510.....66263
520.....66263
522.....66263
558.....66263
886.....68714
1240.....66841
1308.....68716
Proposed Rules:
Ch. I.....65588
1 .....69602, 69603, 69604
16 .....69006, 69603, 69604, 69605
20.....65904
106.....69604
110.....69604
112.....69006, 69605
114.....69604
117.....69604
120.....69604
123.....69604
129.....69604
179.....69604
211.....69604
310.....65904
314.....65904, 67985
600.....65904
601.....67985
1308.....65923

22 CFR

41.....66814, 68992
230.....66841
502.....67025
Proposed Rules:
226.....69802

24 CFR

50.....68719
55.....68719
58.....68719
Proposed Rules:
214.....66670

25 CFR

151.....67928
Proposed Rules:
226.....65589

26 CFR

1.....66639, 68735
54.....68240
Proposed Rules:
1.....68779, 68780
300.....65932

28 CFR

16.....69753

29 CFR

1910 .....66641, 66642, 69543
1926.....66641, 66642
2590.....68240
4022.....68739
Proposed Rules:
1904.....67254, 68782
1910.....65932, 69606
1926.....65932
1952.....67254, 68782

30 CFR

Proposed Rules:
75.....68783
936.....66671

32 CFR

319.....69550, 69551
320.....69289, 39291
701.....69552

33 CFR

100 .....66844, 67026, 68995
110.....67300
117 .....65873, 65874, 66265, 66266, 67027, 67938
141.....69292
151.....67027
155.....67027
160.....67027
165 .....65874, 66267, 66269, 67028, 68995
Proposed Rules:
97.....68784
100.....69007
117 .....67084, 67999, 69803
140.....67326
141.....67326
142.....67326
143.....67326
144.....67326
145.....67326
146.....67326
147.....67326
160.....68784
165.....67086, 68002

34 CFR

Ch. III.....66271
Ch. VI.....69612
668.....65768
674.....65768
682.....65768
685.....65768
Proposed Rules:
200.....69336
Ch. VI.....66865

36 CFR

1191.....67303

37 CFR

384.....66276
385.....67938

38 CFR

17.....68364
Proposed Rules:
17.....69614

39 CFR

20.....69755
111.....69553
3010.....67951
Proposed Rules:
3050.....69805

40 CFR

9.....66279
19.....66643
52 .....65559, 65875, 65877, 66280, 66648, 66845, 67036, 67307, 67952, 68365, 68367, 68997, 69296, 69299, 69773
81.....66845
98.....68162
180 .....65561, 65565, 66649, 66651, 67038, 67042, 67048, 68741, 69562
300.....66283, 69302
372.....66848
721.....65570, 66279
Proposed Rules:
51.....69806
52 .....65590, 65593, 66320, 67090, 67327, 68005, 68377, 68378, 69337, 69625, 69812
63.....66108, 66321
80.....69628
98.....66674, 69337
300.....66325, 69360

42 CFR

433.....66852
Proposed Rules:
84.....69361

44 CFR

64 .....65882, 68999, 69001
206.....66852

45 CFR

146.....68240
147.....68240
153.....66653
155.....66653
156.....66653
157.....66653
158.....66653
170.....65884
Proposed Rules:
1613.....65933

46 CFR

Proposed Rules:
97.....68784

47 CFR

1.....66287, 66288
22.....66288
25.....67309
27.....66288, 66298
64.....67956
69.....67053
73.....66288, 67310
74.....66288
Proposed Rules:
Ch. I.....65601
4.....69018
64.....68005
73.....68384, 69629
90.....65594

48 CFR

204.....69273
208.....69268
212.....69268, 69273
215.....69268
225.....69282
233.....69268
239.....69268
244.....69268
252 .....69288, 69273, 69283
Proposed Rules:
1.....69812
2.....69812
9.....69812
12.....69812
22.....69812
52.....69812
927.....66865
952.....66865
970.....66865

49 CFR

27.....67882
172.....69310
571.....68748
575.....66655
Proposed Rules:
26.....68016
173.....66326
174.....66326

178 66326
179 66326
180 66326
572 69944

50 CFR

10 65844
17 ....68370, 69569
20 65573
21 ....65576, 65578, 65844
223 ....66140, 69310
224 66140
300 ....65887, 69002
622 ....68372, 68373
635 68757
648 ....65888, 66857
660 68764
679 ....68374, 69591, 69592

Proposed Rules:

17 ....65936, 65938, 68660
21 ....65953, 65955
100 66885
223 ....66675, 69033
224 ....66675, 69033
226 65959
242 66885
635 66327
648 66887
679 ....65602, 68390

LIST OF PUBLIC LAWS

Note: No public bills which have become law were received by the Office of the Federal Register for inclusion in today's **List of Public Laws**.

Last List November 15, 2013

Public Laws Electronic Notification Service (PENS)

PENS is a free electronic mail notification service of newly enacted public laws. To subscribe, go to *http://listserv.gsa.gov/archives/publaws-l.html*

Note: This service is strictly for E-mail notification of new laws. The text of laws is not available through this service. **PENS** cannot respond to specific inquiries sent to this address.