burden by requiring investigations to be continually reinvestigated. In addition, permitting access and amendment to such information could disclose security-sensitive information that could be detrimental to homeland security.

(3) From subsection (e)(1) (Relevancy and Necessity of Information) because in the course of investigations into potential violations of federal law, the accuracy of information obtained or introduced occasionally may be unclear, or the information may not be strictly relevant or necessary to a specific investigation. In the interests of effective law enforcement, it is appropriate to retain all information that may aid in establishing patterns of unlawful activity.

(4) From subsection (e)(2) (Collection of Information from Individuals) because requiring that information be collected from the subject of an investigation would alert the subject to the nature or existence of the investigation, thereby interfering with that investigation and related law enforcement activities.

(5) From subsection (e)(3) (Notice to Subjects) because providing such detailed information could impede law enforcement by compromising the existence of a confidential investigation or reveal the identity of witnesses or confidential informants.

(6) From subsections (e)(4)(G), (e)(4)(H), and (e)(4)(I) (Agency Requirements) and (f) (Agency Rules), because portions of this system are exempt from the individual access provisions of subsection (d) for the reasons noted above, and therefore DHS is not required to establish requirements, rules, or procedures with respect to such access. Providing notice to individuals with respect to existence of records pertaining to them in the system of records or otherwise setting up procedures pursuant to which individuals may access and view records pertaining to themselves in the system would undermine investigative efforts and reveal the identities of witnesses, potential witnesses, and confidential informants.

(7) From subsection (e)(5) (Collection of Information) because with the collection of information for law enforcement purposes, it is impossible to determine in advance what information is accurate, relevant, timely, and complete. Compliance with subsection (e)(5) would preclude DHS agents from using their investigative training and exercise of good judgment to both conduct and report on investigations.

(8) From subsection (e)(8) (Notice on Individuals) because compliance would interfere with DHS's ability to obtain, serve, and issue subpoenas, warrants, and other law enforcement mechanisms that may be filed under seal and could result in disclosure of investigative techniques, procedures, and evidence.

(9) From subsection (g)(1) (Civil Remedies) to the extent that the system is exempt from other specific subsections of the Privacy Act.

Dated: August 6, 2013.

Jonathan R. Cantor,

Acting Chief Privacy Officer, Department of Homeland Security.

[FR Doc. 2013–22691 Filed 9–20–13; 8:45 am]

BILLING CODE 4411–14–P

DEPARTMENT OF TRANSPORTATION

Federal Aviation Administration

14 CFR Part 39

[Docket No. FAA–2013–0822; Directorate Identifier 2013–SW–004–AD]

RIN 2120–AA64

Airworthiness Directives; Eurocopter France Helicopters

AGENCY: Federal Aviation Administration (FAA), DOT.

ACTION: Notice of proposed rulemaking (NPRM).

SUMMARY: We propose to supersede an existing airworthiness directive (AD) for Eurocopter France (Eurocopter) Model AS350B3 helicopters with a certain modification (MOD) installed. The existing AD currently requires installing two placards and revising the Rotorcraft Flight Manual (RFM). The AD also requires certain checks and inspecting and replacing, if necessary, all four laminated half-bearings (bearings). Since we issued that AD, we have determined that the unsafe condition applies to additional model helicopters, and that a recently developed Eurocopter modification should be a required terminating action for the repetitive checks required by the AD. This proposed AD would retain the existing AD requirements, require certain modifications which would be terminating action for the airspeed limitations, and would add certain helicopter models to the bearing inspection with a different inspection interval. The proposed actions are intended to prevent vibration due to a failed bearing, failure of the tail rotor, and subsequent loss of control of the helicopter.

DATES: We must receive comments on this proposed AD by November 22, 2013.

ADDRESSES: You may send comments by any of the following methods:

- *Federal eRulemaking Docket:* Go to *http://www.regulations.gov.* Follow the online instructions for sending your comments electronically.
- *Fax:* 202–493–2251.
- *Mail:* Send comments to the U.S. Department of Transportation, Docket Operations, M–30, West Building Ground Floor, Room W12–140, 1200 New Jersey Avenue SE., Washington, DC 20590–0001.
- *Hand Delivery:* Deliver to the ''Mail'' address between 9 a.m. and 5 p.m., Monday through Friday, except Federal holidays.

Examining the AD Docket

You may examine the AD docket on the Internet at *http://www.regulations.gov* or in person at the Docket Operations Office between 9 a.m. and 5 p.m., Monday through Friday, except Federal holidays. The AD docket contains this proposed AD, the foreign authority's AD, the economic evaluation, any comments received and other information. The street address for the Docket Operations Office (telephone 800–647–5527) is in the **ADDRESSES** section. Comments will be available in the AD docket shortly after receipt.

For service information identified in this proposed AD, contact American Eurocopter Corporation, 2701 N. Forum Drive, Grand Prairie, TX 75052; telephone (972) 641–0000 or (800) 232–0323; fax (972) 641–3775; or at *http://www.eurocopter.com/techpub.* You may review service information at the FAA, Office of the Regional Counsel, Southwest Region, 2601 Meacham Blvd., Room 663, Fort Worth, Texas 76137.

FOR FURTHER INFORMATION CONTACT: Robert Grant, Aviation Safety Engineer, Safety Management Group, FAA, 2601 Meacham Blvd., Fort Worth, Texas 76137; telephone (817) 222–5110; email *robert.grant@faa.gov.*

SUPPLEMENTARY INFORMATION:

Comments Invited

We invite you to participate in this rulemaking by submitting written comments, data, or views. We also invite comments relating to the economic, environmental, energy, or federalism impacts that might result from adopting the proposals in this document. The most helpful comments reference a specific portion of the proposal, explain the reason for any recommended change, and include supporting data. To ensure the docket does not contain duplicate comments, commenters should send only one copy of written comments, or if comments are filed electronically, commenters should submit only one time.

We will file in the docket all comments that we receive, as well as a report summarizing each substantive public contact with FAA personnel concerning this proposed rulemaking. Before acting on this proposal, we will

consider all comments we receive on or before the closing date for comments. We will consider comments filed after the comment period has closed if it is possible to do so without incurring expense or delay. We may change this proposal in light of the comments we receive.

Discussion

On April 24, 2013, we issued AD 2012–25–04, Amendment 39–17285 (78 FR 24041) for Eurocopter Model AS350B3 helicopters with MOD 07 5601 installed. AD 2012–25–04 requires, before further flight, installing two placards on the instrument panel and revising the RFM to reduce the Velocity Never Exceed (V_{NE}) indicated airspeed (IAS) limitation. It also requires, before further flight and thereafter after each flight, visually checking all visible faces of the pressure side of the bearings for separation, a crack, or an extrusion, and replacing the four bearings if there is an extrusion or if there is a separation or a crack greater than 5 millimeters (.196 inches). AD 2012–25–04 also requires checking the suction side of the bearings for extrusions and replacing all four bearings if an extrusion is present. Lastly, AD 2012–25–04 requires performing a one-time disassembly and inspection of the bearings for a separation, a crack, or an extrusion, and replacing the four bearings if there is a separation, crack, or extrusion. AD 2012–25–04 superseded Emergency AD (EAD) No. 2012–21–51, dated October 17, 2012 (EAD 2012–21–51), which had the same requirements but which only applied to helicopters with certain part-numbered half-bearings and tail rotor blades.

AD 2012–25–04 and EAD 2012–21–51 were prompted by Emergency AD No. 2012–0207–E, dated October 5, 2012 (EAD 2012–0207–E), and Emergency AD No. 2012–0217–E, dated October 19, 2012 (EAD 2012–0217–E), issued by the European Aviation Safety Agency (EASA), which is the Technical Agent for the Member States of the European Union. EASA advised of premature failures of the bearings, three cases of vibrations originating from the tail rotor due to premature failure of the bearings installed with certain tail rotor blades, and an accident. EAD 2012–0217–E supersedes EAD 2012–0207–E to correct an inconsistency where the new airspeed limitation defined in the placards and the RFM were stated in both true airspeed (TAS) and indicated airspeed (IAS). EAD 2012–0217–E retains some of the requirements of EAD 2012–0207–E, removes the airspeed limitations defined in TAS, and requires inserting a temporary engine health check procedure into the RFM. The actions required by AD 2012–25–04 and EAD 2012–21–51 are intended to prevent vibration due to a failed bearing, failure of the T/R, and subsequent loss of control of the helicopter.

Actions Since Existing AD Was Issued

After we issued EAD No. 2012–21–51, dated October 17, 2012, EASA issued EAD No. 2012–0257–E, dated December 5, 2012 (EAD 2012–0257–E), for Model AS350B, AS350BA, AS350BB, AS350B1, AS350B2, AS350B3 without Modification (MOD) 07 5601, AS350D, AS355E, AS355F, AS355F1, AS355F2, AS355N, and AS355NP helicopters. EAD 2012–0257–E describes the previous issues with the bearings on the AS350B3 helicopters, and states that the criticality of the bearing failures should apply to all AS355 and AS350 helicopters, although service experience has not demonstrated premature deterioration of the bearings on these model helicopters. EAD 2012–0257–E requires repetitive post-flight checks of the bearings, similar to the checks required by EAD 2012–0217–E.

EASA then superseded EAD 2012–0217–E with EASA AD No. 2013–0029, dated February 8, 2013 (AD 2013–0029), to correct an unsafe condition for Eurocopter Model AS 350 B3 helicopters modified by MOD 07 5601, except for helicopters modified by MOD 07 5606 in production. EASA advises that Eurocopter has designed MOD 07 5606, which restores the tail rotor dynamic load level to that on helicopters before installation of MOD 07 5601 and eliminates the modified loading conditions of bearings which caused the intensified deterioration and reported failures. For these reasons, EASA AD 2013–0029 requires incorporation of MOD 07 5606 as a terminating action.

FAA's Determination

These helicopters have been approved by the aviation authority of France and are approved for operation in the United States. Pursuant to our bilateral agreement with France, EASA, its technical representative, has notified us of the unsafe condition described in its AD. We are proposing this AD because we evaluated all known relevant information and determined that an unsafe condition is likely to exist or develop on other helicopters of the same type design.

Related Service Information

We reviewed Eurocopter Service Bulletin (SB) No. AS350–01.00.66, Revision 1, dated February 15, 2013 (SB AS350–01.00.66), which describes procedures for removing the additional chin weights installed on the tail rotor, installing a load compensator, and modifying the electrical system installation, to reduce the dynamic loads on the tail rotor. Eurocopter refers to the procedures in this SB as MOD 07 5606. SB AS350–01.00.66 only applies to helicopters with MOD 07 5601 installed.

We reviewed one Eurocopter Emergency Alert Service Bulletin (EASB) with two numbers: No. 01.00.65 for the Model AS350B3 helicopters and No. 01.00.24 for the non-FAA type certificated Model AS550C3 helicopters (EASB 01.00.65). EASB 01.00.65 is Revision 3, dated February 4, 2013. EASB 01.00.65 specifies installing a placard on the instrument panel and revising the RFM to limit airspeed to 100 knots IAS, revising the RFM to include a procedure in case of in-flight vibrations originating in the tail rotor and an ''engine health check,'' checking the bearings after each flight, and performing a one-time inspection of the bearings. EASB 01.00.65 does not apply to helicopters with MOD 07 5606 installed.

We also reviewed one Eurocopter EASB with four numbers: No 05.00.71 for Model AS350B, BA, BB, D, B1, B2, B3, and the non-FAA type certificated L1 helicopters; No. 05.00.63 for Model AS355E, F, F1, F2, N, and NP helicopters; No. 05.00.46 for the non-FAA type certificated Model AS550A2, C2, C3, and U2 helicopters; and No. 05.00.42 for the non-FAA type certificated Model AS555AF, AN, SN, UF, and UN helicopters (EASB 05.00.71). EASB 05.00.71 is Revision 2, dated December 19, 2012. EASB 05.00.71 specifies procedures for checking the bearings for deterioration or damage after the last flight of each day. EASB 05.00.71 does not apply to helicopters with MOD 07 5601 installed.

We also reviewed Eurocopter SB No. AS350–64.00.11, Revision 0, dated December 19, 2012 (SB AS350–64.00.11), which describes procedures for modifying the tail rotor chin weight support to prevent interference with the bearings. Eurocopter refers to the procedures in this SB as MOD 07 6604. SB AS350–64.00.11 only applies to helicopters with MOD 07 5601 installed.

Proposed AD Requirements

This proposed AD would retain the requirements of AD 2012–25–04, Amendment 39–17285 (78 FR 24041, April 24, 2013). Additionally, this proposed AD would require, for AS350B3 helicopters with MOD 07 5601 installed:

• Modifying the chin weight support and replacing any bearings with more than 5 hours time-in-service (TIS) by following the procedures specified in SB AS350–64.00.11;

• Following certain procedures specified in SB AS350–01.00.66 for removing the additional chin weights and installing blanks, modifying the rotating pitch-change spider assembly, installing a load compensator, and modifying the electrical installation.

• After modifying the helicopter, removing the RFM limitations and placards required to be installed by AD 2012–25–04, Amendment 39–17285 (78 FR 24041, April 24, 2013). Modifying the helicopter would be terminating action for the repetitive checks and inspections.

For Model AS350B, AS350BA, AS350B1, AS350B2, AS350C, AS350D, AS350D1, AS355E, AS355F, AS355F1, AS355F2, AS355N, AS355NP helicopters, and Model AS350B3 helicopters that do not have MOD 07 5601 installed, the proposed AD would also require:

• After the last flight of each day, without exceeding 10 hours TIS between two checks, checking the bearings for separation or a crack. These checks may be performed by the owner/operator (pilot) holding at least a private pilot certificate as it only requires a visual check of the bearings. This authorization is an exception to our standard maintenance regulations and must be entered into the aircraft records showing compliance with the proposed AD; and

• If there is separation or a crack over a specific size, replacing the bearings before further flight.

Differences Between the Proposed AD and the EASA ADs

The EASA AD requires removing the placard and RFM changes with the TAS limitation and replacing it with an IAS limitation. Since the FAA EAD did not include the TAS limitation, this proposed AD would not require removing it. This proposed AD would not require inserting the temporary engine health check procedure in the RFM.

Costs of Compliance

We estimate that the pilot checks of the bearings in the proposed AD would affect 938 helicopters of U.S. Registry, and that 50 helicopters would be affected by the remaining requirements. The cost for the pilot checks is minimal.

We estimate that operators may incur the following costs in order to comply with this AD. At an average labor rate of $85 per hour, installing a placard and revising the RFM will require about .5 work-hour, for a cost per helicopter of $43 and a total cost to U.S. operators of $2,150. Disassembling and inspecting the bearings will require about 6 work-hours, for a cost per helicopter of $510 and a total cost to U.S. operators of $25,500. Modifying the chin weight support will require about 8 work-hours, for a cost per helicopter of $680, and a total cost to U.S. operators of $34,000. Removing the additional chin weights installed on the tail rotor, modifying the rotating pitch-change spider assembly, installing a load compensator, and modifying the electrical system installation will require about 200 work-hours, and required parts will cost $18,343, for a cost per helicopter of $35,343, and a total cost to U.S. operators of $1,767,150.

If necessary, replacing the bearings installed on the aircraft will require about 6 work-hours, at an average labor rate of $85, and required parts will cost $2,415, for a cost per helicopter of $2,925.

Authority for This Rulemaking

Title 49 of the United States Code specifies the FAA's authority to issue rules on aviation safety. Subtitle I, section 106, describes the authority of the FAA Administrator. ''Subtitle VII: Aviation Programs,'' describes in more detail the scope of the Agency's authority.

We are issuing this rulemaking under the authority described in ''Subtitle VII, Part A, Subpart III, Section 44701: General requirements.'' Under that section, Congress charges the FAA with promoting safe flight of civil aircraft in air commerce by prescribing regulations for practices, methods, and procedures the Administrator finds necessary for safety in air commerce. This regulation is within the scope of that authority because it addresses an unsafe condition that is likely to exist or develop on products identified in this rulemaking action.

Regulatory Findings

We determined that this proposed AD would not have federalism implications under Executive Order 13132. This proposed AD would not have a substantial direct effect on the States, on the relationship between the national Government and the States, or on the distribution of power and responsibilities among the various levels of government.

For the reasons discussed, I certify this proposed regulation:

1. Is not a ''significant regulatory action'' under Executive Order 12866;

2. Is not a ''significant rule'' under the DOT Regulatory Policies and Procedures (44 FR 11034, February 26, 1979);

3. Will not affect intrastate aviation in Alaska to the extent that it justifies making a regulatory distinction; and

4. Will not have a significant economic impact, positive or negative, on a substantial number of small entities under the criteria of the Regulatory Flexibility Act.

We prepared an economic evaluation of the estimated costs to comply with this proposed AD and placed it in the AD docket.

List of Subjects in 14 CFR Part 39

Air transportation, Aircraft, Aviation safety, Incorporation by reference, Safety.

The Proposed Amendment

Accordingly, under the authority delegated to me by the Administrator, the FAA proposes to amend 14 CFR part 39 as follows:

PART 39—AIRWORTHINESS DIRECTIVES

■ 1. The authority citation for part 39 continues to read as follows:

Authority: 49 U.S.C. 106(g), 40113, 44701.

§ 39.13 [Amended]

■ 2. The FAA amends § 39.13 by removing airworthiness directive (AD) 2012–25–04, Amendment 39–17285 (78 FR 24041, April 24, 2013), and adding the following new (AD):

Eurocopter France: Docket No. FAA–2013–0822; Directorate Identifier 2013–SW–004–AD.

(a) Applicability

This AD applies to Model AS350B, AS350BA, AS350B1, AS350B2, AS350B3 (except AS350B3 helicopters with modification (MOD) 07 5606 installed), AS350C, AS350D, AS350D1, AS355E, AS355F, AS355F1, AS355F2, AS355N, and AS355NP helicopters, certificated in any category.

(b) Unsafe Condition

This AD defines the unsafe condition as severe vibrations due to failure of laminated half-bearings (bearings). This condition could result in failure of the tail rotor and subsequent loss of control of the helicopter.

(c) Affected ADs

This AD supersedes AD No. 2012–25–04, Amendment 39–17285 (78 FR 24041, April 24, 2013).

(d) Comments Due Date

We must receive comments by November 22, 2013.

(e) Compliance

You are responsible for performing each action required by this AD within the

specified compliance time unless it has already been accomplished prior to that time.

(f) Required Actions

(1) For Model AS350B3 helicopters with MOD 07 5601 installed:

Note 1 to paragraph (f): MOD 075601 is an integral part of a specific Model AS350B3 configuration, commercially identified as ''AS350B3e'' and is not fitted on Model AS350B3 helicopters of other configurations.

(i) Before further flight:

(A) Install a velocity never exceed (V_{NE}) placard that reads as follows on the instrument panel in full view of the pilot and co-pilot with 6-millimeter red letters on a white background:

VNE LIMITED TO 100 KTS IAS.

(B) Replace the IAS limit versus the flight altitude placard located inside the cabin on the center post with the placard as depicted in Table 1 to paragraph (f) of this AD:

VNE POWER ON

Hp (ft)	IAS (kts)
0	100
2000	97
4000	94
6000	91
8000	88
10000	85
12000	82
14000	79
16000	76
18000	73
20000	70

VNE POWER ON—Continued

Hp (ft)	IAS (kts)
22000	67
Valid for VNE POWER OFF	

Table 1 to paragraph (f).

(ii) Before further flight, revise the Rotorcraft Flight Manual (RFM) by inserting a copy of this AD into the RFM or by making pen and ink changes as follows:

(A) Revise paragraph 2.3 of the RFM by inserting the following:

VNE limited to 100 kts IAS.

(B) Revise paragraph 2.6 of the RFM by inserting Table 2 to Paragraph (f) of this AD.

VNE POWER ON

Hp (ft)	IAS (kts)
0	100
2000	97
4000	94
6000	91
8000	88
10000	85
12000	82
14000	79
16000	76
18000	73
20000	70
22000	67
Valid for VNE POWER OFF	

Table 2 to Paragraph (f).

(C) Add the following as paragraph 3.3.3 to the RFM:

3.3.3 IN–FLIGHT VIBRATIONS FELT IN THE PEDALS

Symptom:

IN-FLIGHT VIBRATIONS FELT IN THE PEDALS

1. CHECK PEDAL EFFECTIVENESS
2. SMOOTHLY REDUCE THE SPEED TO VY
3. AVOID SIDESLIP AS MUCH AS POSSIBLE

LAND AS SOON AS POSSIBLE

(iii) Before further flight, and thereafter after each flight, without exceeding 3 hours time-in-service (TIS) between two checks, visually check each bearing as follows:

(A) Position both tail rotor blades horizontally.

(B) Apply load (F) by hand, perpendicular to the pressure face of one tail rotor blade (a), as shown in Figure 1 to paragraph (f) of this AD, taking care not to reach the extreme position against the tail rotor hub. The load will deflect the tail rotor blade towards the tail boom.

(C) While maintaining the load, check all the visible faces of the bearings (front and side faces) in area B of DETAIL A of Figure 1 to paragraph (f) of this AD for separation between the elastomer and metal parts, a crack in the elastomer, or an extrusion (see example in Figure 2 to paragraph (f) of this AD). A flashlight may be used to enhance the check.

BILLING CODE 4910–13–P

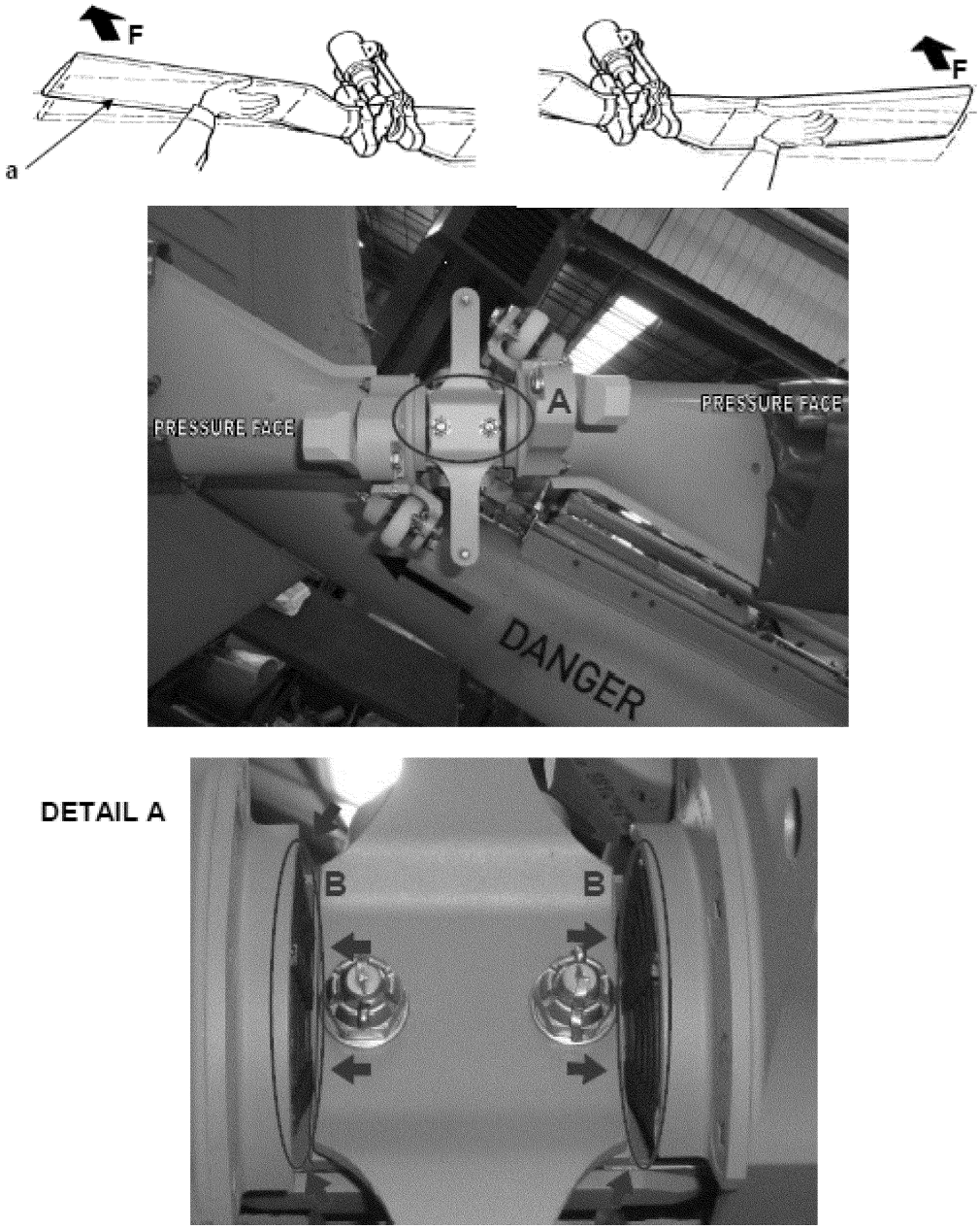

Figure 1 to paragraph (f)

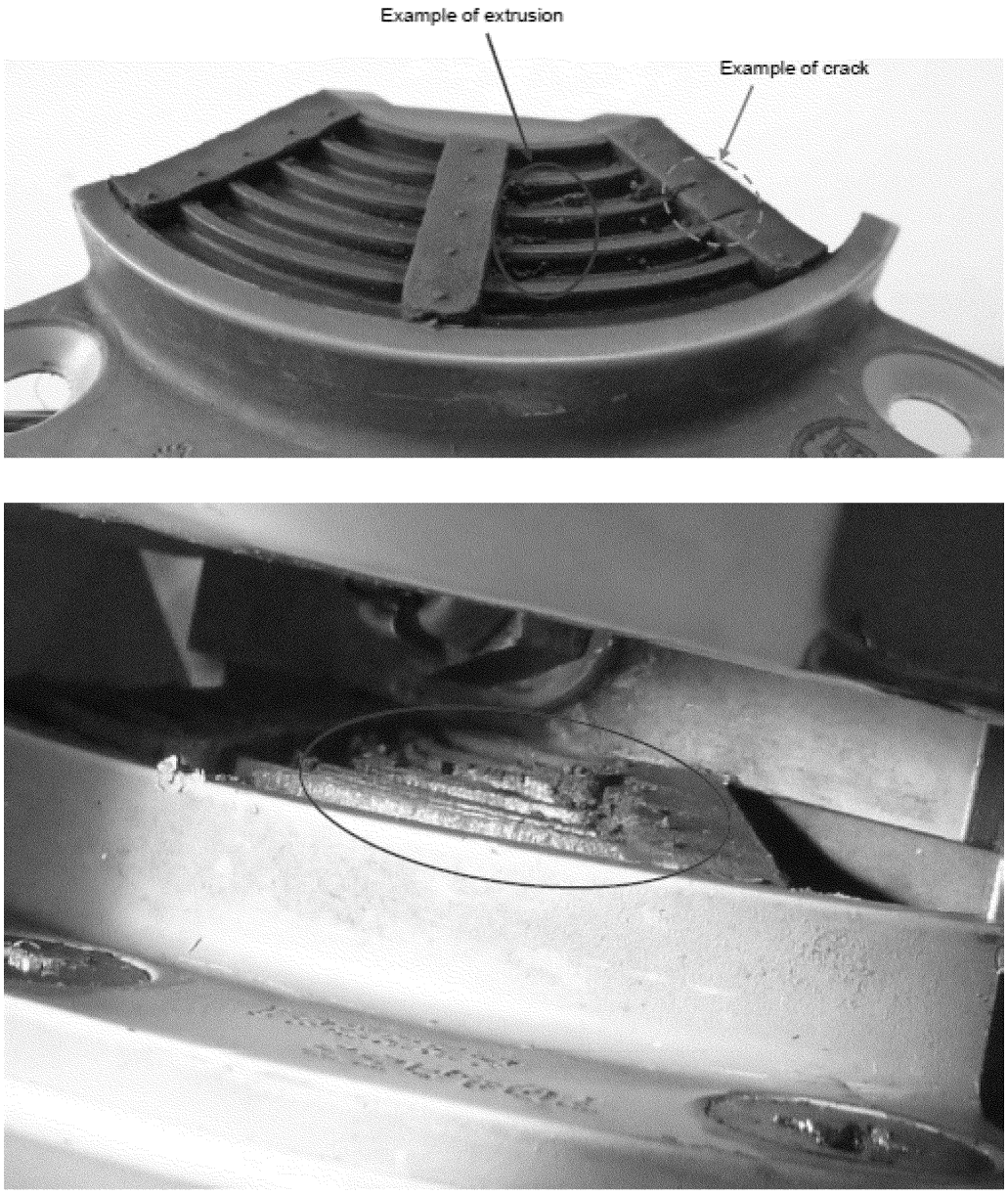

Figure 2 to paragraph (f)

(D) Repeat paragraphs (f)(1)(iii)(A) through (f)(1)(iii)(C) on the other tail rotor blade.

(E) Apply load (G) by hand perpendicular to the suction face of one tail rotor blade as shown in Figure 3 to paragraph (f) of this AD. The load will deflect the tail rotor blade away from the tail boom.

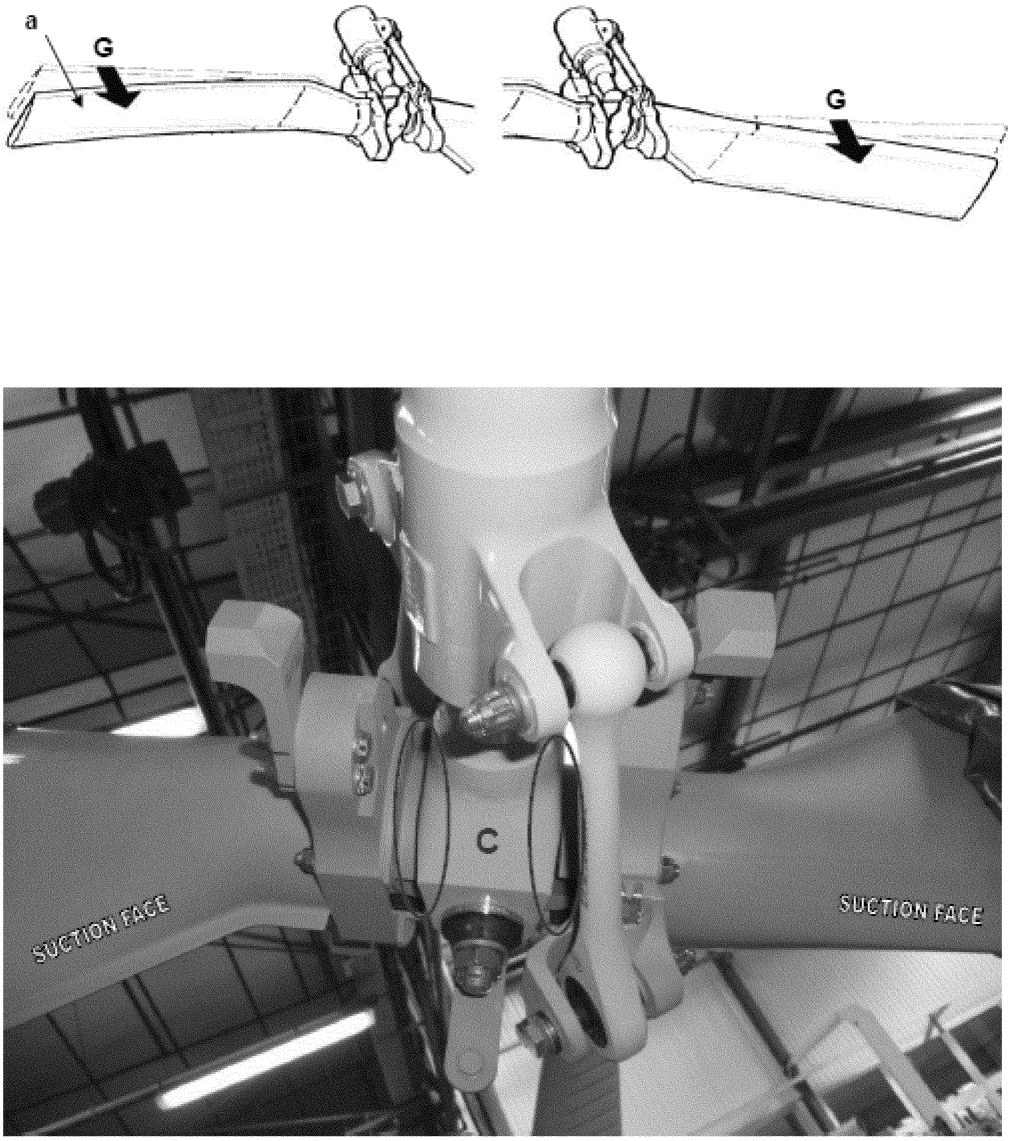

Figure 3 to paragraph (f)

(F) While maintaining the load, check visible faces of Area C as shown in Figure 3 to paragraph (f) of this AD for any extrusion. A flashlight may be used to enhance the check.

(G) Repeat paragraphs (f)(1)(iii)(E) and (f)(1)(iii)(F) on the other tail rotor blade.

(iv) The actions required by paragraphs (f)(1)(iii)(A) through (f)(1)(iii)(G) of this AD may be performed by the owner/operator (pilot) holding at least a private pilot certificate, and must be entered into the aircraft records showing compliance with this AD in accordance with 14 CFR §§ 43.9(a)(1)–(4) and 14 CFR 91.417(a)(2)(v). The record must be maintained as required by 14 CFR §§ 91.417, 121.380, or 135.439.

(v) If there is an extrusion on any bearing, before further flight, replace the four bearings with airworthy bearings.

(vi) If there is a separation or a crack on the pressure side bearing, measure the separation or the crack. If the separation or crack is greater than 5 millimeters (.196 inches) as indicated by dimension ''L'' in Figure 4 to paragraph (f) of this AD, before further flight, replace the four bearings with airworthy bearings.

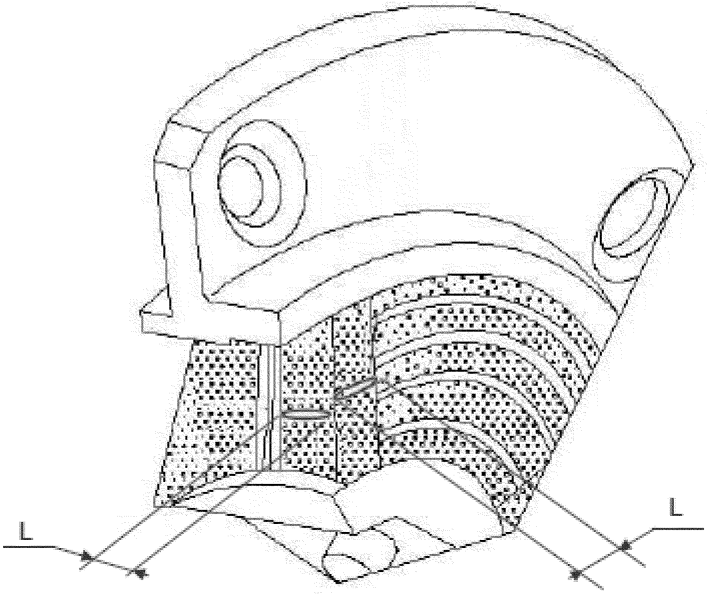

Figure 4 to paragraph (f)

BILLING CODE 4910–13–C

(vii) No later than after the last flight of the day, perform a one-time inspection by removing the bearings and inspecting for a separation, a crack, or an extrusion. This inspection is not a daily inspection. If there is a separation, crack, or extrusion, before further flight, replace the four bearings with airworthy bearings.

(viii) Within 130 hours TIS:

(A) Modify the chin weight support as described in the Accomplishment Instructions, paragraphs 3.B.2.a through 3.B.2.h, of Eurocopter Service Bulletin (SB) No. AS350–64.00.11, Revision 0, dated December 19, 2012.

(B) Remove the additional chin weights, install blanks on the chin weights, replace bearings with more than 5 hours TIS, and re-identify the blade assembly as described in the Accomplishment Instructions, paragraph 3.B.2.a., of Eurocopter SB No. AS350–01.00.66, Revision 1, dated February 15, 2013 (SB AS350–01.00.66).

(C) Modify and re-identify the rotating pitch-change spider assembly as described in the Accomplishment Instructions, paragraph 3.B.2.b., of SB AS350–01.00.66.

(D) Install a load compensator as described in the Accomplishment Instructions, paragraph 3.B.3.b., of SB AS350–01.00.66.

(E) Modify the electrical installation as described in the Accomplishment Instructions, section 3.B.4., of SB AS350–01.00.66.

Note 4 to paragraph (f): The manufacturer refers to the actions in paragraphs (f)(1)(viii)(B) through (f)(1)(viii)(E) as MOD 07 5606.

(ix) After modification of a helicopter as required by paragraphs (f)(1)(viii)(A) through (f)(1)(viii)(E) of this AD, the actions of paragraph (f)(1)(iii) through (f)(1)(vii) of this AD are no longer required and the operating limitation placards and RFM procedures required by paragraphs (f)(1)(i) through (f)(1)(ii)(C) of this AD may be removed.

(2) For Model AS350B, AS350BA, AS350B1, AS350B2, AS350C, AS350D, AS350D1, AS355E, AS355F, AS355F1, AS355F2, AS355N, AS355NP helicopters, and Model AS350B3 helicopters that do not have MOD 07 5601 installed:

(i) No later than after the last flight of the day, and thereafter during each last flight of the day check, without exceeding 10 hours TIS between two checks, visually check each bearing as described in paragraphs (f)(1)(iii)(A) through (f)(1)(vi) of this AD.

(ii) If there is an extrusion on any bearing, before further flight, replace the bearing with an airworthy bearing.

(iii) If there is a separation or a crack on the bearing, measure the separation or the crack. If the separation or crack is greater than 5 mm (.196 inches) as indicated by dimension ''L'' and greater than 2 mm (.078 inches) as indicated by dimension ''P'' in Figure 3 of Eurocopter Emergency Alert Service Bulletin (EASB) No. 05.00.71 or No. 05.00.63, both Revision 2 and both dated December 19, 2012, as required for your model helicopter, before further flight, replace the bearing.

(g) Credit for Actions Previously Completed

Actions accomplished before the effective date of this AD in accordance with Emergency AD No. 2012–21–51 or AD No. 2012–25–04, Amendment 39–17285 (78 FR 24041, April 24, 2013) are considered acceptable for compliance with the corresponding actions of this AD.

(h) Special Flight Permit

Special flight permits are prohibited.

(i) Alternative Methods of Compliance (AMOCs)

(1) The Manager, Safety Management Group, FAA, may approve AMOCs for this AD. Send your proposal to: Robert Grant, Aviation Safety Engineer, Safety Management Group, FAA, 2601 Meacham Blvd., Fort Worth, Texas 76137; telephone (817) 222–5328; email *robert.grant@faa.gov.*

(2) For operations conducted under a 14 CFR part 119 operating certificate or under 14 CFR part 91, subpart K, we suggest that you notify your principal inspector, or lacking a principal inspector, the manager of the local flight standards district office or certificate holding district office before operating any aircraft complying with this AD through an AMOC.

(j) Additional Information

(1) Eurocopter EASB No. 01.00.65 and No. 01.00.24, both Revision 3 and both dated February 4, 2013, which are co-published as one document and which are not incorporated by reference, contain additional information about the subject of this AD. You may review this service information at the FAA, Office of the Regional Counsel, Southwest Region, 2601 Meacham Blvd., Room 663, Fort Worth, Texas 76137.

(2) The subject of this AD is addressed in European Aviation Safety Agency Emergency AD No. 2013–0029, dated February 8, 2013, which can be found in the AD Docket on the Internet at *http://www.regulations.gov.*

(k) Subject

Joint Aircraft Service Component (JASC) Code: 6400: Tail Rotor.

Issued in Fort Worth, Texas, on September 13, 2013.

Lance T. Gant,

Acting Directorate Manager, Rotorcraft Directorate, Aircraft Certification Service.

[FR Doc. 2013–23102 Filed 9–20–13; 8:45 am]

BILLING CODE 4910–13–P

DEPARTMENT OF LABOR

Mine Safety and Health Administration

30 CFR Parts 7 and 75

RIN 1219–AB79

Refuge Alternatives for Underground Coal Mines

AGENCY: Mine Safety and Health Administration, Labor.

ACTION: Request for information; extension of comment period.

SUMMARY: In response to requests from interested parties, the Mine Safety and Health Administration (MSHA) is extending the comment period on the Agency's Request for Information (RFI) on Refuge Alternatives for Underground Coal Mines. This extension gives interested parties additional time to review new information on refuge alternatives.

DATES: Comments must be received by midnight Eastern Standard Time on December 6, 2013.

ADDRESSES: Submit comments and supporting documentation by any of the following methods:

- *Federal E-Rulemaking Portal: http://www.regulations.gov.* Follow the on-line instructions for submitting comments for Docket Number MSHA–2013–0033.
- *Electronic mail: zzMSHA-comments@dol.gov.* Include ''RIN 1219–AB79'' in the subject line of the message.
- *Mail:* Send comments to MSHA, Office of Standards, Regulations, and Variances, 1100 Wilson Boulevard, Room 2350, Arlington, Virginia 22209–3939.
- *Hand Delivery or Courier:* MSHA, Office of Standards, Regulations, and Variances, 1100 Wilson Boulevard, Room 2350, Arlington, Virginia, between 9:00 a.m. and 5:00 p.m. Monday through Friday, except Federal holidays. Sign in at the receptionist's desk on the 21st floor.

Instructions: Clearly identify all submissions with ''RIN 1219–AB79''. Because comments will not be edited to remove any identifying or contact information, MSHA cautions the commenter against including information in the submission that should not be publicly disclosed.

FOR FURTHER INFORMATION CONTACT: George F. Triebsch, Director, Office of Standards, Regulations, and Variances, MSHA, at *triebsch.george@dol.gov* (email); 202–693–9440 (voice); or 202–693–9441 (facsimile). These are not toll-free numbers.

SUPPLEMENTARY INFORMATION: On August 8, 2013 (78 FR 48593), MSHA published a Request for Information on Refuge Alternatives for Underground Coal Mines. The RFI comment period had been scheduled to close on October 7, 2013. In response to requests, MSHA is extending the comment period to December 6, 2013 to allow interested parties additional time to review National Institute for Occupational Safety and Health information.

Dated: September 18, 2013.

Joseph A. Main,

Assistant Secretary of Labor for Mine Safety and Health.

[FR Doc. 2013–23031 Filed 9–20–13; 8:45 am]

BILLING CODE 4510–43–P

DEPARTMENT OF VETERANS AFFAIRS

38 CFR Part 9

RIN 2900–AO42

Servicemembers' Group Life Insurance and Veterans' Group Life Insurance Information Access

AGENCY: Department of Veterans Affairs.

ACTION: Proposed rule.

SUMMARY: The Department of Veterans Affairs (VA) proposes to amend its regulations governing Servicemembers' Group Life Insurance (SGLI), Family SGLI, SGLI Traumatic Injury Protection, and Veterans' Group Life Insurance (all hereafter referred to as SGLI). The purpose is to acknowledge and clarify what is implicit in the law: That VA, which has the responsibility under the law to oversee the SGLI program and ensure its proper operation, also has the right to full access to records held by the insurer or on behalf of the insurer from whom VA has purchased a policy. These records include all of the insurer's records related to the operation and administration of the SGLI programs necessary to protect the legal and financial rights of the Government and of the persons affected by the activities of the agency and its agents.

DATES: Comments must be received by VA on or before November 22, 2013.

ADDRESSES: Written comments may be submitted through *http://www.Regulations.gov*; by mail or hand delivery to Director, Regulation Policy and Management (02REG), Department of Veterans Affairs, 810 Vermont Ave. NW., Room 1068, Washington, DC 20420; or by fax to (202) 273–9026. Comments should indicate that they are submitted in response to ''RIN 2900–AO42 Servicemembers' Group Life Insurance and Veterans' Group Life Insurance Information Access.'' Copies of comments received will be available for public inspection in the Office of Regulation Policy and Management, Room 1068, between the hours of 8:00 a.m. and 4:30 p.m., Monday through Friday (except holidays). Please call (202) 461–4902 for an appointment. (This is not a toll-free number.) In addition, during the comment period, comments may be viewed online through the Federal Docket Management System at *http://www.Regulations.gov*.

FOR FURTHER INFORMATION CONTACT: Monica Keitt, Attorney/Advisor, Department of Veterans Affairs Regional Office and Insurance Center (310/290B), 5000 Wissahickon Avenue, P.O. Box 8079, Philadelphia, PA 19101, (215) 842–2000, ext. 2905. This is not a toll-free number.

SUPPLEMENTARY INFORMATION: Section 1966(a) of title 38, United States Code, authorizes the Secretary of Veterans Affairs (Secretary) to purchase one or more group life insurance policies from one or more life insurance companies for the purposes of providing the benefits specified in 38 U.S.C. 1965–1980A, namely the Servicemembers' Group Life Insurance (SGLI), Family SGLI, SGLI Traumatic Injury Protection, and Veterans' Group Life Insurance programs (all hereafter referred to as SGLI). Under 38 U.S.C. 1966 and the terms of the policy purchased by VA pursuant to section 1966(a), the insurer has the responsibility of administering the SGLI programs on a day-to-day basis with VA retaining oversight responsibility to ensure that the SGLI programs are managed in an effective and efficient manner that allows the Secretary to fulfill his responsibilities under the law.

Section 3101 of title 44, United States Code, requires the head of each Federal agency to make and preserve records containing adequate and proper documentation of the organization, functions, policies, decisions, procedures, and essential transactions of the agency and designed to furnish the information necessary to ''protect the legal and financial rights of the Government and of persons directly affected by the agency's activities.'' The records that are created and maintained