AUTHENTICATED
U.S. GOVERNMENT
INFORMATION
GPO

FEDERAL REGISTER

Vol. 78 Monday,

No. 174 September 9, 2013

Pages 54959–55168

OFFICE OF THE FEDERAL REGISTER

The **FEDERAL REGISTER** (ISSN 0097–6326) is published daily, Monday through Friday, except official holidays, by the Office of the Federal Register, National Archives and Records Administration, Washington, DC 20408, under the Federal Register Act (44 U.S.C. Ch. 15) and the regulations of the Administrative Committee of the Federal Register (1 CFR Ch. I). The Superintendent of Documents, U.S. Government Printing Office, Washington, DC 20402 is the exclusive distributor of the official edition. Periodicals postage is paid at Washington, DC.

The **FEDERAL REGISTER** provides a uniform system for making available to the public regulations and legal notices issued by Federal agencies. These include Presidential proclamations and Executive Orders, Federal agency documents having general applicability and legal effect, documents required to be published by act of Congress, and other Federal agency documents of public interest.

Documents are on file for public inspection in the Office of the Federal Register the day before they are published, unless the issuing agency requests earlier filing. For a list of documents currently on file for public inspection, see *www.ofr.gov.*

The seal of the National Archives and Records Administration authenticates the Federal Register as the official serial publication established under the Federal Register Act. Under 44 U.S.C. 1507, the contents of the **Federal Register** shall be judicially noticed.

The **Federal Register** is published in paper and on 24x microfiche. It is also available online at no charge at *www.fdsys.gov*, a service of the U.S. Government Printing Office.

The online edition of the **Federal Register** is issued under the authority of the Administrative Committee of the Federal Register as the official legal equivalent of the paper and microfiche editions (44 U.S.C. 4101 and 1 CFR 5.10). It is updated by 6:00 a.m. each day the **Federal Register** is published and includes both text and graphics from Volume 59, 1 (January 2, 1994) forward. For more information, contact the GPO Customer Contact Center, U.S. Government Printing Office. Phone 202-512-1800 or 866-512-1800 (toll free). E-mail, *gpo@custhelp.com.*

The annual subscription price for the **Federal Register** paper edition is $749 plus postage, or $808, plus postage, for a combined **Federal Register, Federal Register** Index and List of CFR Sections Affected (LSA) subscription; the microfiche edition of the **Federal Register** including the **Federal Register** Index and LSA is $165, plus postage. Six month subscriptions are available for one-half the annual rate. The prevailing postal rates will be applied to orders according to the delivery method requested. The price of a single copy of the daily **Federal Register,** including postage, is based on the number of pages: $11 for an issue containing less than 200 pages; $22 for an issue containing 200 to 400 pages; and $33 for an issue containing more than 400 pages. Single issues of the microfiche edition may be purchased for $3 per copy, including postage. Remit check or money order, made payable to the Superintendent of Documents, or charge to your GPO Deposit Account, VISA, MasterCard, American Express, or Discover. Mail to: U.S. Government Printing Office—New Orders, P.O. Box 979050, St. Louis, MO 63197-9000; or call toll free 1-866-512-1800, DC area 202-512-1800; or go to the U.S. Government Online Bookstore site, see *bookstore.gpo.gov.*

There are no restrictions on the republication of material appearing in the **Federal Register.**

How To Cite This Publication: Use the volume number and the page number. Example: 77 FR 12345.

Postmaster: Send address changes to the Superintendent of Documents, Federal Register, U.S. Government Printing Office, Washington, DC 20402, along with the entire mailing label from the last issue received.

SUBSCRIPTIONS AND COPIES

PUBLIC

Subscriptions:

Paper or fiche	**202–512–1800**
Assistance with public subscriptions	**202–512–1806**

General online information **202–512–1530; 1–888–293–6498**

Single copies/back copies:

Paper or fiche	**202–512–1800**
Assistance with public single copies	**1–866–512–1800 (Toll-Free)**

FEDERAL AGENCIES

Subscriptions:

Paper or fiche	**202–741–6005**
Assistance with Federal agency subscriptions	**202–741–6005**

FEDERAL REGISTER WORKSHOP

THE FEDERAL REGISTER: WHAT IT IS AND HOW TO USE IT

FOR: Any person who uses the Federal Register and Code of Federal Regulations.

WHO: Sponsored by the Office of the Federal Register.

WHAT: Free public briefings (approximately 3 hours) to present:

1. The regulatory process, with a focus on the Federal Register system and the public's role in the development of regulations.
2. The relationship between the Federal Register and Code of Federal Regulations.
3. The important elements of typical Federal Register documents.
4. An introduction to the finding aids of the FR/CFR system.

WHY: To provide the public with access to information necessary to research Federal agency regulations which directly affect them. There will be no discussion of specific agency regulations.

WHEN: Tuesday, September 17, 2013
9 a.m.–12:30 p.m.

WHERE: Office of the Federal Register
Conference Room, Suite 700
800 North Capitol Street, NW.
Washington, DC 20002

RESERVATIONS: (202) 741–6008

Printed on recycled paper.

Contents

Federal Register

Vol. 78, No. 174

Monday, September 9, 2013

Agricultural Marketing Service
PROPOSED RULES
Cotton Futures Classification:
Optional Classification Procedure, 54970–54971

Agriculture Department
See Agricultural Marketing Service
See Food and Nutrition Service
See Forest Service

Air Force Department
NOTICES
Privacy Act; Systems of Records, 55066–55067

Alcohol, Tobacco, Firearms, and Explosives Bureau
PROPOSED RULES
Machine Guns, Destructive Devices and Certain Other Firearms:
Background Checks for Responsible Persons of a Corporation, Trust or Other Legal Entity with Respect to Making or Transferring a Firearm, 55014–55029

Children and Families Administration
See Refugee Resettlement Office
NOTICES
Single-Source Cooperative Agreements:
American Public Human Services Association for the Association of Administrators of the Interstate Compact on the Placement of Children, 55081
Single-Source Grants Awards:
Massachusetts Office for Refugees and Immigrants in Boston, MA, 55080

Coast Guard
NOTICES
Meetings:
National Maritime Security Advisory Committee, 55089–55091

Commerce Department
See Economic Development Administration
See Foreign-Trade Zones Board
See International Trade Administration
See National Oceanic and Atmospheric Administration
See National Telecommunications and Information Administration

Defense Acquisition Regulations System
RULES
Defense Federal Acquisition Regulation Supplements:
Technical Amendments, 54968–54969

Defense Department
See Air Force Department
See Defense Acquisition Regulations System
See Navy Department
NOTICES
Meetings:
Defense Advisory Committee on Women in the Services, 55065–55066

Drug Enforcement Administration
NOTICES
Schedules of Controlled Substances:
Ephedrine, Pseudoephedrine, and Phenylpropanolamine; Aggregate Production Quotas, 55099–55103

Economic Development Administration
NOTICES
Petitions:
Eligibility to Apply for Trade Adjustment Assistance, 55056

Education Department
NOTICES
Requests for Information:
Title III Evaluation and Research Studies Agenda, 55068–55069

Employee Benefits Security Administration
NOTICES
Proposed Exemptions:
ATandT Inc., et al., Dallas, TX, 55103–55114

Employment and Training Administration
NOTICES
Charter Renewals:
Native American Employment and Training Council, 55114

Energy Department
See Federal Energy Regulatory Commission

Environmental Protection Agency
RULES
Air Quality State Implementation Plans; Approvals and Promulgations:
Connecticut; NOx Emission Trading Orders as Single Source SIP Revisions, 54962–54967
Massachusetts; Reasonably Available Control Technology for the 1997 8-Hour Ozone Standard, 54960–54962
PROPOSED RULES
Air Quality State Implementation Plans; Approvals and Promulgations:
Texas; Attainment Demonstration for the Houston–Galveston–Brazoria 1997 8-hour Ozone Nonattainment Area, 55037–55046
Texas; Houston; Reasonable Further Progress Plan, Contingency Measures, and Transportation Conformity Budgets, 55029–55037

Executive Office of the President
See Trade Representative, Office of United States

Farm Credit System Insurance Corporation
NOTICES
Meetings:
Farm Credit System Insurance Corporation Board, 55074–55075

Federal Aviation Administration
NOTICES
Petition for Exemption; Summaries Received, 55136

Federal Communications Commission
RULES
Rural Health Care Support Mechanism, 54967–54968
NOTICES
Radio Broadcasting Services:
AM or FM Proposals to Change the Community of License, 55075

Federal Deposit Insurance Corporation
NOTICES
Agency Information Collection Activities; Proposals, Submissions, and Approvals:
Certified Statement for Semiannual Deposit Insurance Assessment, 55075–55076

Federal Energy Regulatory Commission
NOTICES
Applications:
PacifiCorp Energy, 55071–55072
Sutton Hydroelectric Company, LLC, 55072
Whitewater Green Energy, LLC, 55069–55071
Environmental Impact Statements; Availability, etc.:
Transcontinental Gas Pipe Line Company, LLC; Mobile Bay South III Expansion Project, 55072–55074

Federal Trade Commission
NOTICES
Analyses of Proposed Consent Orders to Aid Public Comment:
Ganley Ford West, Inc., 55076–55077
Timonium Chrysler, Inc. d/b/a Don White's Timonium Chrysler Jeep Dodge, 55077–55079

Fish and Wildlife Service
PROPOSED RULES
Endangered and Threatened Wildlife and Plants:
90-Day Finding on a Petition to Delist or Reclassify from Endangered to Threatened Five Southwest Species, 55046–55051
NOTICES
Endangered and Threatened Species Permit Applications, 55091–55093

Food and Drug Administration
NOTICES
Meetings:
Circulatory System Devices Panel of the Medical Devices Advisory Committee, 55081–55082

Food and Nutrition Service
NOTICES
Agency Information Collection Activities; Proposals, Submissions, and Approvals, 55052–55055

Foreign-Trade Zones Board
NOTICES
Approvals for Manufacturing Authorities:
Firth Rixson, Inc., d/b/a Firth Rixson Monroe, Foreign-Trade Zone 141, Rochester, NY, 55056–55057
Authorization of Production Activities:
Komatsu America Corp., Foreign-Trade Zone 134, Chattanooga, TN, 55057
LLFlex, LLC, Subzone 29J, Louisville, KY, 55057
Vestas Nacelles America, Inc., Foreign-Trade Subzone 123E, Brighton, Denver, Pueblo, and Windsor, CO, 55057
Manufacture of Carbon Fiber for the U.S. Market:
Toho Tenax America, Inc., Foreign-Trade Subzone 148C, Rockwood, TN, 55057

Forest Service
NOTICES
Environmental Impact Statements; Availability, etc.:
Beaverhead–Deerlodge National Forest Land and Resource Management Plan; District of Montana Court Order, 55055–55056

General Services Administration
NOTICES
Meetings:
Presidential Commission on Election Administration, 55079

Government Ethics Office
NOTICES
Agency Information Collection Activities; Proposals, Submissions, and Approvals:
Executive Branch Personnel Public Financial Disclosure Report, 55079–55080

Health and Human Services Department
See Children and Families Administration
See Food and Drug Administration
See National Institutes of Health
See Refugee Resettlement Office

Homeland Security Department
See Coast Guard
NOTICES
Requests for Nominations:
Data Privacy and Integrity Advisory Committee, 55088–55089

Housing and Urban Development Department
NOTICES
Fair Housing Initiatives Program:
Application and Award Policies and Procedures, Fiscal Year 2013; Solicitation of Comment, 55091

Interior Department
See Fish and Wildlife Service
See Land Management Bureau
See National Park Service

Internal Revenue Service
PROPOSED RULES
Draft Guidance for Industry and Staff:
Information Reporting by Applicable Large Employers on Health Insurance Coverage Offered Under Employer-Sponsored Plans, 54996–55013
Information Reporting of Minimum Essential Coverage, 54986–54996
Limitations on the Importation of Net Built-In Losses, 54971–54986

International Trade Administration
NOTICES
Antidumping Duty Administrative Reviews; Results, Extensions, Amendments, etc.:
Corrosion-Resistant Carbon Steel Flat Products from the Republic of Korea, 55057–55059
Countervailing Duty Administrative Reviews; Results, Extensions, Amendments, etc.:
High Pressure Steel Cylinders from the People's Republic of China, 55059–55060

International Trade Commission
NOTICES
Antidumping and Countervailing Duty Investigations; Results, Extensions, Amendments, etc.:
Certain Pasta from Italy and Turkey, 55095
Investigations; Determinations, Modifications, Rulings, etc.:
Ferrosilicon from Russia and Venezuela, 55096
Flash Memory Chips and Products Containing Same, 55095–55096
Point-to-Point Network Communication Devices and Products, 55096–55098
Meetings; Sunshine Act, 55098

Justice Department
See Alcohol, Tobacco, Firearms, and Explosives Bureau
See Drug Enforcement Administration
NOTICES
Consent Decrees under CERCLA, 55098
Proposed Consent Decrees under CERCLA, 55098–55099

Labor Department
See Employee Benefits Security Administration
See Employment and Training Administration
See Occupational Safety and Health Administration

Land Management Bureau
NOTICES
Requests for Norninations:
Grand Staircase–Escalante National Monument Advisory Committee, 55093

National Credit Union Administration
NOTICES
Meetings; Sunshine Act, 55116

National Highway Traffic Safety Administration
RULES
Federal Motor Vehicle Safety Standards:
Ejection Mitigation, 55138–55167

National Institutes of Health
NOTICES
Agency Information Collection Activities; Proposals, Submissions, and Approvals:
Genomics and Society Public Surveys in Conjunction with Smithsonian Museum of Natural History Genome Exhibit, 55083–55084
How NIH Programs Apply Methodologies to Improve Their Research Programs, 55084–55085
Meetings:
Center for Scientific Review, 55086–55087
National Institute of Allergy and Infectious Diseases, 55085
National Institute of Diabetes and Digestive and Kidney Diseases, 55086–55088
National Institute of Mental Health, 55085
National Institute on Alcohol Abuse and Alcoholism, 55088

National Oceanic and Atmospheric Administration
NOTICES
Agency Information Collection Activities; Proposals, Submissions, and Approvals:
Applications and Reports for Registration as a Tanner or Agent, 55061
Expanded Vessel Monitoring System Requirement in the Pacific Coast Groundfish Fishery, 55060
Meetings:
Integrated Ocean Observing System Advisory Committee, 55063
Mid-Atlantic Fishery Management Council, 55063–55064
North Pacific Fishery Management Council, 55061–55062
Western Pacific Fishery Management Council, 55062–55063
Requests for Nominations:
Science Advisory Board; Gulf Coast Ecosystem Restoration Science Program Advisory Working Group, 55064

National Park Service
NOTICES
Environmental Impact Statements; Availability, etc.:
Dog Management Plan; Golden Gate National Recreation Area, CA, 55093–55094

National Science Foundation
NOTICES
Meetings; Sunshine Act, 55116

National Telecommunications and Information Administration
NOTICES
Meetings:
First Responder Network Authority Board Special Review Committee, 55064–55065

Navy Department
NOTICES
Agency Information Collection Activities; Proposals, Submissions, and Approvals, 55067–55068

Neighborhood Reinvestment Corporation
NOTICES
Meetings; Sunshine Act, 55116–55117

Nuclear Regulatory Commission
RULES
Fee Schedules:
Fee Recovery; Correction, 54959–54960
NOTICES
Draft Regulatory Guides:
Ultimate Heat Sink for Nuclear Power Plants, 55117–55118
Standard Review Plans:
Seismic Instrumentation for Nuclear Power Plants, 55118–55119

Occupational Safety and Health Administration
NOTICES
Agency Information Collection Activities; Proposals, Submissions, and Approvals:
Access to Employee Exposure and Medical Records, 55114–55116

Office of United States Trade Representative
See Trade Representative, Office of United States

Pension Benefit Guaranty Corporation
NOTICES
Agency Information Collection Activities; Proposals, Submissions, and Approvals:
Payment of Premiums; Termination Premium, 55120–55121
Termination of Single-Employer Plans, Missing Participants, 55121

Personnel Management Office
NOTICES
Agency Information Collection Activities; Proposals, Submissions, and Approvals:
Death Benefit Payment Rollover Election, 55124
Report of Medical Examination of Person Electing Survivor Benefits under the Civil Service Retirement System, 55122
Self-Certification of Full-Time School Attendance for the School Year, etc., 55121–55122
USAJOBS, 55122–55123
We Need Information About Your Missing Payment, 55123–55124

Postal Regulatory Commission
NOTICES
Domestic Mail Contracts, 55124–55125
New Postal Products, 55125–55126

Refugee Resettlement Office
NOTICES
Single-Source Grants Awards:
Massachusetts Office for Refugees and Immigrants in Boston, MA, 55080

Securities and Exchange Commission
NOTICES
Exemption Orders for Broker-Dealers Participating in Lead Market Maker Incentive Program:
NYSE Arca, Inc., 55126–55128
Meetings; Sunshine Act, 55128
Self-Regulatory Organizations; Proposed Rule Changes:
C2 Options Exchange, Inc., 55128–55130
Chicago Board Options Exchange, Inc., 55130–55131
Miami International Securities Exchange, LLC, 55131–55133
Suspension of Trading Orders:
Anhui Taiyang Poultry Co., Inc., a/k/a The Parkview Group, Inc., Business Development Solutions, Inc., and Tsingyuan Brewery Ltd., 55134
Trading Suspension Orders:
China Cablecom Holdings Ltd., 55134

State Department
NOTICES
Culturally Significant Objects Imported for Exhibition:
Iran Modern, 55134
Waivers:
Restriction on Assistance to the Central Government of Tajikistan, 55135
Restriction on Assistance to the Central Government of the Kyrgyz Republic, 55134–55135
Restriction on Assistance to the Central Government of Turkmenistan, 55135
Restriction on Assistance to the Central Government of Uzbekistan, 55134

Trade Representative, Office of United States
NOTICES
Participants in Trade in Services Agreement, 55135–55136

Transportation Department
See Federal Aviation Administration
See National Highway Traffic Safety Administration

Treasury Department
See Internal Revenue Service

Separate Parts In This Issue

Part II
Transportation Department, National Highway Traffic Safety Administration, 55138–55167

Reader Aids
Consult the Reader Aids section at the end of this page for phone numbers, online resources, finding aids, reminders, and notice of recently enacted public laws.

To subscribe to the Federal Register Table of Contents LISTSERV electronic mailing list, go to http://listserv.access.gpo.gov and select Online mailing list archives, FEDREGTOC-L, Join or leave the list (or change settings); then follow the instructions.

CFR PARTS AFFECTED IN THIS ISSUE

A cumulative list of the parts affected this month can be found in the Reader Aids section at the end of this issue.

7 CFR

Proposed Rules:

27 54970

10 CFR

170 54959

26 CFR

Proposed Rules:

1 (2 documents) 54971, 54986

301 (2 documents) 54986, 54996

27 CFR

Proposed Rules:

479 55014

40 CFR

52 (2 documents) 54960, 54962

Proposed Rules:

52 (2 documents) 55029, 55037

47 CFR

54 54967

48 CFR

201 54968

206 54968

49 CFR

571 55138

50 CFR

Proposed Rules:

17 55046

Rules and Regulations

Federal Register
Vol. 78, No. 174
Monday, September 9, 2013

This section of the FEDERAL REGISTER contains regulatory documents having general applicability and legal effect, most of which are keyed to and codified in the Code of Federal Regulations, which is published under 50 titles pursuant to 44 U.S.C. 1510.

The Code of Federal Regulations is sold by the Superintendent of Documents. Prices of new books are listed in the first FEDERAL REGISTER issue of each week.

NUCLEAR REGULATORY COMMISSION

10 CFR Part 170

[NRC–2012–0211]

RIN 3150–AJ19

Revision of Fee Schedules; Fee Recovery for Fiscal Year 2013; Correction

AGENCY: Nuclear Regulatory Commission.

ACTION: Correcting amendment.

SUMMARY: The U.S. Nuclear Regulatory Commission (NRC) published a final rule in the **Federal Register** on July 1, 2013 (78 FR 39461), amending the licensing, inspection, and annual fees charged to its applicants and licensees. The final rule inadvertently removed from a fee category description the word ''one,'' which is necessary to indicate the number of government-to-government consents included in this fee category. This document corrects the error.

DATES: *Effective Date:* This correction is effective on September 9, 2013.

FOR FURTHER INFORMATION CONTACT: Arlette Howard, Office of the Chief Financial Officer, U.S. Nuclear Regulatory Commission, Washington, DC 20555–0001; telephone: 301–415–1481, email: *Arlette.Howard@nrc.gov.*

SUPPLEMENTARY INFORMATION: The 2013 final fee rule was published in the **Federal Register** on July 1, 2013 (78 FR 39461), with an effective date of August 30, 2013. The final rule inadvertently removed the word ''one'' from the description for fee category 15.G. in § 170.31 of Title 10 of the *Code of Federal Regulations.* The word ''one'' is necessary to indicate the number of government-to-government consents included in this fee category. This document corrects the error.

Rulemaking Procedure

Because this amendment corrects an error to the NRC's regulations, the Commission finds that the notice and comment provisions of the Administrative Procedure Act are unnecessary and is exercising its authority under 5 U.S.C. 553(b)(3)(B) to publish this amendment as a final rule. This amendment does not require action by any person or entity regulated by the NRC. Also, the final rule does not change the substantive responsibilities of any person or entity regulated by the NRC.

List of Subjects in 10 CFR Part 170

Byproduct material, Import and export licenses, Intergovernmental relations, Non-payment penalties, Nuclear materials, Nuclear power plants and reactors, Source material, Special nuclear material.

For the reasons set out in the preamble and under the authority of the Atomic Energy Act of 1954, as amended; the Energy Reorganization Act of 1974, as amended; and 5 U.S.C. 552 and 553, 10 CFR part 170 is corrected by making the following correcting amendment.

PART 170—FEES FOR FACILITIES, MATERIALS, IMPORT AND EXPORT LICENSES, AND OTHER REGULATORY SERVICES UNDER THE ATOMIC ENERGY ACT OF 1954, AS AMENDED

■ 1. The authority citation for part 170 continues to read as follows:

Authority: Independent Offices Appropriations Act sec. 501 (31 U.S.C. 9701); Atomic Energy Act sec. 161(w) (42 U.S.C. 2201(w)); Energy Reorganization Act sec. 201 (42 U.S.C. 5841); Chief Financial Officers Act sec. 205 (31 U.S.C. 901, 902); Government Paperwork Elimination Act sec. 1704, (44 U.S.C. 3504 note); Energy Policy Act secs. 623, Energy Policy Act of 2005 sec. 651(e), Pub. L. 109–58, 119 Stat. 783 (42 U.S.C. 2201(w), 2014, 2021, 2021b, 2111).

■ 2. In § 170.31, amend the table by revising entry 15.G. to read as follows:

§ 170.31 Schedule of fees for materials licenses and other regulatory services, including inspections, and import and export licenses.

* * * * *

SCHEDULE OF MATERIALS FEES

[See footnotes at end of table]

Category of materials licenses and type of fees[1]	*Fee*[2 3]
* * * * * * *	
15. * * *	
G. Application for export of appendix P Category 1 materials requiring Executive Branch review and to obtain one government-to-government consent for this process. For additional consents see 15.I.	
Application—new license, or amendment; or license exemption request	8,700
* * * * * * *	

[1] *Types of fees*—Separate charges, as shown in the schedule, will be assessed for preapplication consultations and reviews; applications for new licenses, approvals, or license terminations; possession-only licenses; issuances of new licenses and approvals; certain amendments and renewals to existing licenses and approvals; safety evaluations of sealed sources and devices; generally licensed device registrations; and certain inspections. The following guidelines apply to these charges:

(a) *Application and registration fees.* Applications for new materials licenses and export and import licenses; applications to reinstate expired, terminated, or inactive licenses, except those subject to fees assessed at full costs; applications filed by Agreement State licensees to register under the general license provisions of 10 CFR 150.20; and applications for amendments to materials licenses that would place the license in a higher fee category or add a new fee category must be accompanied by the prescribed application fee for each category.

(1) Applications for licenses covering more than one fee category of special nuclear material or source material must be accompanied by the prescribed application fee for the highest fee category.

(2) Applications for new licenses that cover both byproduct material and special nuclear material in sealed sources for use in gauging devices will pay the appropriate application fee for fee category 1.C. only.

(b) *Licensing fees.* Fees for reviews of applications for new licenses, renewals, and amendments to existing licenses, preapplication consultations and other documents submitted to the NRC for review, and project manager time for fee categories subject to full cost fees are due upon notification by the Commission in accordance with § 170.12(b).

(c) *Amendment fees.* Applications for amendments to export and import licenses must be accompanied by the prescribed amendment fee for each license affected. An application for an amendment to an export or import license or approval classified in more than one fee category must be accompanied by the prescribed amendment fee for the category affected by the amendment, unless the amendment is applicable to two or more fee categories, in which case the amendment fee for the highest fee category would apply.

(d) *Inspection fees.* Inspections resulting from investigations conducted by the Office of Investigations and nonroutine inspections that result from third-party allegations are not subject to fees. Inspection fees are due upon notification by the Commission in accordance with § 170.12(c).

(e) *Generally licensed device registrations under 10 CFR 31.5.* Submittals of registration information must be accompanied by the prescribed fee.

[2] Fees will not be charged for orders related to civil penalties or other civil sanctions issued by the Commission under 10 CFR 2.202 or for amendments resulting specifically from the requirements of these orders. For orders unrelated to civil penalties or other civil sanctions, fees will be charged for any resulting licensee-specific activities not otherwise exempted from fees under this chapter. Fees will be charged for approvals issued under a specific exemption provision of the Commission's regulations under Title 10 of the *Code of Federal Regulations* (e.g., 10 CFR 30.11, 40.14, 70.14, 73.5, and any other sections in effect now or in the future), regardless of whether the approval is in the form of a license amendment, letter of approval, safety evaluation report, or other form. In addition to the fee shown, an applicant may be assessed an additional fee for sealed source and device evaluations as shown in fee categories 9.A. through 9.D.

[3] Full cost fees will be determined based on the professional staff time multiplied by the appropriate professional hourly rate established in § 170.20 in effect when the service is provided, and the appropriate contractual support services expended.

* * * * *

Dated at Rockville, Maryland, this 3rd day of September, 2013.

For the Nuclear Regulatory Commission.

Cindy Bladey,

Chief, Rules, Announcements, and Directives Branch, Division of Administrative Services, Office of Administration.

[FR Doc. 2013–21796 Filed 9–6–13; 8:45 am]

BILLING CODE 7590–01–P

ENVIRONMENTAL PROTECTION AGENCY

40 CFR Part 52

[EPA–R01–OAR–2013–0028; A–1–FRL–9797–3]

Approval and Promulgation of Air Quality Implementation Plans; Massachusetts; Reasonably Available Control Technology for the 1997 8-Hour Ozone Standard

AGENCY: Environmental Protection Agency (EPA).

ACTION: Final rule.

SUMMARY: EPA is approving State Implementation Plan (SIP) revisions submitted by the State of Massachusetts. These SIP revisions consist of a demonstration that Massachusetts meets the requirements of reasonably available control technology (RACT) for oxides of nitrogen (NO_X) and volatile organic compounds (VOC) set forth by the Clean Air Act with respect to the 1997 8-hour ozone standard. Additionally, we are approving updates to two existing regulations limiting emissions of volatile organic compounds. This action is being taken in accordance with the Clean Air Act.

DATES: This rule is effective on October 9, 2013.

ADDRESSES: EPA has established a docket for this action under Docket Identification No. EPA–R01–OAR–2013–0028. All documents in the docket are listed on the *www.regulations.gov* Web site. Although listed in the index, some information is not publicly available, i.e., CBI or other information whose disclosure is restricted by statute. Certain other material, such as copyrighted material, is not placed on the Internet and will be publicly available only in hard copy form. Publicly available docket materials are available either electronically through *www.regulations.gov* or in hard copy at the Office of Ecosystem Protection, U.S. Environmental Protection Agency, EPA New England Regional Office, Office of Ecosystem Protection, Air Quality Planning Unit, 5 Post Office Square—Suite 100, Boston, MA. EPA requests that if at all possible, you contact the contact listed in the **FOR FURTHER INFORMATION CONTACT** section to schedule your inspection. The Regional Office's official hours of business are Monday through Friday, 8:30 to 4:30, excluding legal holidays.

Copies of the documents relevant to this action are also available for public inspection during normal business hours, by appointment at the Division of Air Quality Control, Department of Environmental Protection, One Winter Street, 8th Floor, Boston, MA 02108.

FOR FURTHER INFORMATION CONTACT: Bob McConnell, Air Quality Planning Unit, U.S. Environmental Protection Agency, EPA New England Regional Office, 5 Post Office Square, Suite 100 (mail code: OEP05–2), Boston, MA 02109–3912, telephone number (617) 918–1046, fax number (617) 918–0046, email *mcconnell.robert@epa.gov.*

SUPPLEMENTARY INFORMATION: Throughout this document whenever ''we,'' ''us,'' or ''our'' is used, we mean EPA.

Organization of this document. The following outline is provided to aid in locating information in this preamble.

I. Background and Purpose
II. Final Action
III. Statutory and Executive Order Reviews

I. Background and Purpose

On February 14, 2013 (78 FR 10583), EPA published a Notice of Proposed Rulemaking (NPR) for the State of Massachusetts. The NPR proposed approval of Massachusetts' January 31, 2008 SIP submittal that demonstrates that the state has adopted air pollution control strategies that represent RACT for purposes of compliance with the 1997 8-hour ozone standard. In addition, the NPR proposed approval of two revised regulations (and associated definitions) submitted by Massachusetts as a SIP revision on June 1, 2010: 310 CMR 7.18(8), ''Solvent Metal Degreasing;'' and 310 CMR 7.24(6), ''Dispensing of Motor Vehicle Fuel.''

The specific details of the January 31, 2008 RACT demonstration and the two revised regulations and the rationale for EPA's proposed action are explained in the NPR and will not be restated here. No public comments were received on the NPR.

II. Final Action

EPA is approving the RACT certification in Massachusetts' January 31, 2008 SIP submittal that demonstrates that the state has adopted air pollution control strategies that represent RACT for purposes of compliance with the 1997 8-hour ozone standard. EPA previously approved other portions of Massachusetts' January 31, 2008 SIP submittal on August 22, 2012 (77 FR 50595), and Massachusetts withdrew certain other portions of the

submittal in a letter dated January 18, 2013. Therefore, with today's final action, EPA has completed its action on Massachusetts' January 31, 2008 SIP submittal. Nothing more regarding this submittal is pending before EPA.

In addition, we are approving two revised regulations submitted by Massachusetts on June 1, 2010: 310 CMR 7.18(8), ''Solvent Metal Degreasing;'' and 310 CMR 7.24(6), ''Dispensing of Motor Vehicle Fuel.'' Furthermore, we are also approving the following new and revised definitions in 310 CMR 7.00 that are associated with these regulations: Isolate; minor modification; routine maintenance; solvent metal degreasing; special and extreme solvent metal cleaning; and substantial modification.

III. Statutory and Executive Order Reviews

Under the Clean Air Act, the Administrator is required to approve a SIP submission that complies with the provisions of the Act and applicable Federal regulations. 42 U.S.C. 7410(k); 40 CFR 52.02(a). Thus, in reviewing SIP submissions, EPA's role is to approve state choices, provided that they meet the criteria of the Clean Air Act. Accordingly, this action merely approves state law as meeting Federal requirements and does not impose additional requirements beyond those imposed by state law. For that reason, this action:

- Is not a ''significant regulatory action'' subject to review by the Office of Management and Budget under Executive Order 12866 (58 FR 51735, October 4, 1993);
- does not impose an information collection burden under the provisions of the Paperwork Reduction Act (44 U.S.C. 3501 *et seq.*);
- is certified as not having a significant economic impact on a substantial number of small entities under the Regulatory Flexibility Act (5 U.S.C. 601 *et seq.*);
- does not contain any unfunded mandate or significantly or uniquely affect small governments, as described in the Unfunded Mandates Reform Act of 1995 (Pub. L. 104–4);
- does not have Federalism implications as specified in Executive Order 13132 (64 FR 43255, August 10, 1999);
- is not an economically significant regulatory action based on health or safety risks subject to Executive Order 13045 (62 FR 19885, April 23, 1997);
- is not a significant regulatory action subject to Executive Order 13211 (66 FR 28355, May 22, 2001);
- is not subject to requirements of Section 12(d) of the National Technology Transfer and Advancement Act of 1995 (15 U.S.C. 272 note) because application of those requirements would be inconsistent with the Clean Air Act; and
- does not provide EPA with the discretionary authority to address, as appropriate, disproportionate human health or environmental effects, using practicable and legally permissible methods, under Executive Order 12898 (59 FR 7629, February 16, 1994).

In addition, this rule does not have tribal implications as specified by Executive Order 13175 (65 FR 67249, November 9, 2000), because the SIP is not approved to apply in Indian country located in the state, and EPA notes that it will not impose substantial direct costs on tribal governments or preempt tribal law. The Congressional Review Act, 5 U.S.C. 801 *et seq.,* as added by the Small Business Regulatory Enforcement Fairness Act of 1996, generally provides that before a rule may take effect, the agency promulgating the rule must submit a rule report, which includes a copy of the rule, to each House of the Congress and to the Comptroller General of the United States. EPA will submit a report containing this action and other required information to the U.S. Senate, the U.S. House of Representatives, and the Comptroller General of the United States prior to publication of the rule in the **Federal Register**. A major rule cannot take effect until 60 days after it is published in the **Federal Register**. This action is not a ''major rule'' as defined by 5 U.S.C. 804(2).

Under section 307(b)(1) of the Clean Air Act, petitions for judicial review of this action must be filed in the United States Court of Appeals for the appropriate circuit by November 8, 2013. Filing a petition for reconsideration by the Administrator of this final rule does not affect the finality of this action for the purposes of judicial review nor does it extend the time within which a petition for judicial review may be filed, and shall not postpone the effectiveness of such rule or action. This action may not be challenged later in proceedings to enforce its requirements. (See section 307(b)(2).)

List of Subjects in 40 CFR Part 52

Environmental protection, Air pollution control, Carbon monoxide, Incorporation by reference, Intergovernmental relations, Lead, Nitrogen dioxide, Ozone, Particulate matter, Reporting and recordkeeping requirements, Sulfur oxides, Volatile organic compounds.

Dated: March 22, 2013.

H. Curtis Spalding,

Regional Administrator, EPA New England.

Part 52 of chapter I, title 40 of the Code of Federal Regulations is amended as follows:

PART 52—APPROVAL AND PROMULGATION OF IMPLEMENTATION PLANS

■ 1. The authority citation for part 52 continues to read as follows:

Authority: 42 U.S.C. 7401 et seq.

Subpart W—Massachusetts

■ 2. Section 52.1120 is amended by adding paragraph (c)(138) to read as follows:

§ 52.1120 Identification of plan.

* * * * *

(c) * * *

(138) Revisions to the State Implementation Plan submitted by the Massachusetts Department of Environmental Protection on June 1, 2010.

(i) Incorporation by reference.

(A) Massachusetts Regulation 310 CMR 7.18(8), ''U Solvent Metal Degreasing,'' effective on March 6, 2009.

(B) Massachusetts Regulation 310 CMR 7.24(6), ''U Dispensing of Motor Vehicle Fuel,'' effective on March 1, 2009.

(C) The definitions of the following terms contained in Massachusetts Regulation 310 CMR 7.00, ''Statutory Authority; Legend; Preamble; Definitions,'' effective on March 1, 2009: isolate; minor modification; routine maintenance; solvent metal degreasing; special and extreme solvent metal cleaning; substantial modification.

■ 3. Section 52.1129 is amended by adding paragraph (j) to read as follows:

§ 52.1129 Control strategy: Ozone.

* * * * *

(j) Approval—Reasonably Available Control Technology Demonstration for the 1997 8-hour ozone standard submitted by the Massachusetts Department of Environmental Protection on January 31, 2008. The revision consists of the state's certification that with regard to the 1997 8-hour ozone standard, Reasonably Available Control Technology controls have been implemented for all sources in the state covered by EPA's Control Techniques Guidelines (CTG) and for all major sources of volatile organic compound and nitrogen oxide emissions. The

submittal also includes negative declaration for several CTG categories.

■ 4. In § 52.1167, Table 52.1167 is amended by adding new entries to existing state citations for 310 CMR 7.18(8) and 310 CMR 7.24(6) in order of ''Date approved by EPA'' to read as follows:

§ 52.1167 EPA-approved Massachusetts State regulations.

* * * * *

TABLE 52.1167—EPA-APPROVED RULES AND REGULATIONS

[See Notes at end of Table]

State citation	Title/subject	Date submitted by State	Date approved by EPA	*Federal register* citation	52.1120(c)	Comments/unapproved sections
*	*	*	*	*	*	*
310 CMR 7.18(8).	Solvent Metal Degreasing ..	6/1/10	9/9/13	[Insert *Federal Register* page number where the document begins].	[Insert next available paragraph number in sequence].	
*	*	*	*	*	*	*
310 CMR 7.24(6).	Dispensing of Motor Vehicle Fuel.	6/1/10	9/9/13	[Insert *Federal Register* page number where the document begins].	[Insert next available paragraph number in sequence].	
*	*	*	*	*	*	*

NOTES:
[1] This table lists regulations adopted as of 1972. It does not depict regulatory requirements which may have been part of the Federal SIP before this date.
[2] The regulations are effective statewide unless otherwise stated in comments or title section.

[FR Doc. 2013–21618 Filed 9–6–13; 8:45 am]

BILLING CODE 6560–50–P

ENVIRONMENTAL PROTECTION AGENCY

40 CFR Part 52

[EPA–R01–OAR–2012–0198; A–1–FRL–9900–63–Region1]

Approval and Promulgation of Air Quality Implementation Plans; Connecticut; NO_X Emission Trading Orders as Single Source SIP Revisions

AGENCY: Environmental Protection Agency (EPA).

ACTION: Final rule.

SUMMARY: EPA is approving State Implementation Plan (SIP) revisions submitted by the State of Connecticut. These revisions approve NO_X Emission Trading Orders (trading orders) allowing facilities to create and/or use emission credits to comply with the NO_X emission limits required by Regulations of Connecticut State Agencies (RCSA) section 22a–174–22 (Control of Nitrogen Oxides). The intended effect of this action is to allow facilities to determine the most cost-effective way to comply with the state regulation. This action is being taken in accordance with the Clean Air Act.

DATES: This rule is effective on October 9, 2013.

ADDRESSES: EPA has established a docket for this action under Docket Identification No. EPA–R01–OAR–2010–0198. All documents in the electronic docket are listed on the *www.regulations.gov* Web site. Although listed in the index, some information is not publicly available, i.e., CBI or other information whose disclosure is restricted by statute. Certain other material, such as copyrighted material, is not placed on the Internet and will be publicly available only in hard copy form. Publicly available docket materials are available either electronically through *www.regulations.gov* or in hard copy at the Office of Ecosystem Protection, U.S. Environmental Protection Agency, EPA New England Regional Office, Office of Ecosystem Protection, Air Permits, Toxics and Indoor Programs Unit, 5 Post Office Square—Suite 100, Boston, MA. EPA requests that if at all possible, you contact the contact listed in the **FOR FURTHER INFORMATION CONTACT** section to schedule your inspection. The Regional Office's official hours of business are Monday through Friday, 8:30 to 4:30, excluding legal holidays.

FOR FURTHER INFORMATION CONTACT: Donald Dahl, Air Permits, Toxics, and Indoor Programs Unit, Office of Ecosystem Protection, U.S. Environmental Protection Agency, EPA New England Regional Office, 5 Post Office Square, Suite 100, (OEP05–2), Boston, MA 02109–3912, phone number (617) 918–1657, fax number (617) 918–0657, email *Dahl.Donald@epa.gov.*

SUPPLEMENTARY INFORMATION:

Throughout this document whenever ''we,'' ''us,'' or ''our'' is used, we mean EPA.

Table of Contents

I. What is the background for this action?
II. What comments did EPA receive?
III. What facilities are affected by this action?
IV. What action is EPA taking?
V. Statutory and Executive Order Reviews.

I. What is the background for this action?

On November 29, 2012 (77 FR 71140), EPA published a Notice of Proposed Rulemaking (NPR) for the State of Connecticut. The NPR proposed approval of 148 source-specific trading orders that allow 50 sources to trade emission credits in order to comply with state regulations for reducing

nitrogen oxide (NO_X) emissions. The formal SIP revisions were submitted by Connecticut on August 18, 2000, December 12, 2002, July 1, 2004, and January 13, 2006.[1] Detailed background information and EPA's rationale for the proposed approval are provided in EPA's November 29, 2012, **Federal Register** action.

II. What comments did EPA receive?

The public comment period on the proposed approval of Connecticut's SIP revision ended on December 31, 2012. EPA did not receive any comments on the proposed approval of this SIP revision.

III. What facilities are affected by this action?

EPA is approving NO_X emission trading orders for the facilities listed in the table below.

Trading order number(s)	Name of facility	Facility location
1494A, 8116 Modification, 8116A, 8116B	Connecticut Resources Recovery Authority	Hartford.
1494 Modifications 2, 3, 4, 5, and 6	Connecticut Light and Power	Branford, Greenwich, Hartford, Montville, Middletown, Milford, Preston, Norwalk, and Torrington.
8154 Modifications 1, 2, and 3, 8154A	Combustion Engineering	Windsor.
1626, 1626 Modification 1, 8247	Borough of Naugatuck	Naugatuck.
8159, 8181, 8181A, 8181A Modification 1, 8219, 8219A, 8219A Modification 1, 8251, 8251 Modification 1.	Connecticut Light and Power/Devon Power LLC.	Milford.
8109	Hamilton Sundstrand	Windsor Locks.
8093A, 8093B, 8093C, 8093C Modification 1, 8136, 8136A.	Pfizer	Groton.
8119 Modification, 8119A, 8119A Modification 1.	City of Norwich, Department of Public Utilities	Norwich.
8092 Modification, 8103 Modifications 1 and 2, 8177 Modification 1, 8241, 8241 Modification 1, 8242, 8244, 8244 Modification 1, 8253, 8253 Modification 1.	United Illuminating/Wisvest-Connecticut LLC/PSEG Power Connecticut LLC.	Bridgeport.
8115 Modification 2, 8115B	University of Connecticut	Storrs.
8107 Modifications 1 and 2, 8152, 8152 Modification, 8152A, 8221, 8221A, 8222, 8222A.	Northeast Nuclear Energy/Dominion Nuclear	Waterford.
8180, 8180 Modification 1, 8180A, 8180A Modification 1.	Connecticut Jet Power	Branford, Greenwich, and Torrington.
8114 Modifications 1 and 2, 8114A	CYTEC Industries	Wallingford.
8117. 8117A, 8117B	Sprague Paperboard	Versailles.
8157, 8160, 8162, 8182, 8182A, 8182A Modification 1, 8213, 8213A, 8213A Modification 1, 8214, 8214A, 8214A Modification 1, 8215, 8215A, 8215A Modification 1, 8227, 8227A, 8227A Modification 1.	Connecticut Light and Power/Middletown Power LLC.	Middletown.
8156, 8161, 8183, 8183A, 8183A Modification 1, 8216, 8216A, 8216A Modification 1, 8217, 8217A, 8217A Modification 1.	Connecticut Light and Power/Montville Power LLC.	Montville.
8158, 8184, 8184A, 8184A Modification 1, 8218, 8218A, 8218A Modification 1.	Connecticut Light and Power/Norwalk Power LLC.	Norwalk.
8134, 8134A, 8248	United Technologies	East Hartford.
8175, 8175 Modification 1, 8175A, 8175A Modification 1.	Northeast Generation Company	Berlin.
8102 Modification, 8153, 8176 Modification 1, 8240, 8240 Modification 1, 8243.	United Illuminating/Wisvest-Connecticut LLC/PSEG Power Connecticut LLC.	New Haven.
8220, 8220A, 8220A Modification 1	Bristol Meyers Squibb	Wallingford.
8124, 8124A	Stone Container	Uncasville.
8120, 8120A	Sikorsky Aircraft	Stratford.
8137 Modifications 1 and 2, 8137A	AlliedSignal and U.S. Army Tank	Stratford.
8188	Allegheny Ludlum	Wallingford.
8112, 8112A, 8112A Modification 1, 8201CC	United States Naval Submarine Base	Groton.
8230	Jacobs Vehicle Systems	Bloomfield.
8110 Modification	Yale University	New Haven.
8123 Modification, 8123A	Algonquin Gas Transmission	Cromwell.
8250, 8261	Algonquin Windsor Locks	Windsor Locks.
8249, 8249 Modification 1	Capitol District Energy Center	Hartford.
8094 Modification	Ogden Martin	Bristol.
8095 Modification	American Ref-Fuel	Preston.
8100 Modification	Bridgeport Resco	Bridgeport.
8101 Modification	Connecticut Department of Mental Health and Addiction Services.	Middletown.
8111 Modification	Uniroyal Chemical	Naugatuck.
8118 Modification	South Norwalk Electrical Works	Norwalk.
8130 Modification	Connecticut Department of Public Works	Newtown.

[1] In addition to the NO_X Trading Orders EPA is taking action on today, the January 13, 2006 SIP submittal contained Consent Order 8246, Modification 1 issued to Sikorsky Aircraft, Consent Order 8258 issued to Mallace Industries, Consent Order 8032A issued to Coats North America, Consent Order 8009 issued to Uniroyal, and Consent Order 8200 issued to Watson Laboratories. EPA did not propose to take action on these Consent Orders in its November 29, 2012 **Federal Register** action and we are not taking action on these Consent Orders in this action.

Trading order number(s)	Name of facility	Facility location
8132 Modification	Bridgeport Hospital	Bridgeport.
8141 Modification	Town of Wallingford, Department of Public Utilities.	Wallingford.

IV. What action is EPA taking?

Pursuant to section 110 of the CAA, EPA is approving Connecticut's August 18, 2000, December 12, 2002, July 1, 2004, and January 13, 2006 SIP revisions relating to 148 NO_X trading orders. These orders allow sources to create and/or use NO_X emission credits to comply with RCSA Section 22a–174–22 (Control of Nitrogen Oxides).

EPA has made the determination these SIP revisions are approvable because they are in accordance with the CAA. The detailed rationale for this action is set forth in the proposed rulemaking referenced above.

V. Statutory and Executive Order Reviews

Under the Clean Air Act, the Administrator is required to approve a SIP submission that complies with the provisions of the Act and applicable Federal regulations. 42 U.S.C. 7410(k); 40 CFR 52.02(a). Thus, in reviewing SIP submissions, EPA's role is to approve state choices, provided that they meet the criteria of the Clean Air Act. Accordingly, this action merely approves state law as meeting Federal requirements and does not impose additional requirements beyond those imposed by state law. For that reason, this action:

- Is not a ''significant regulatory action'' subject to review by the Office of Management and Budget under Executive Order 12866 (58 FR 51735, October 4, 1993);
- does not impose an information collection burden under the provisions of the Paperwork Reduction Act (44 U.S.C. 3501 *et seq.*);
- is certified as not having a significant economic impact on a substantial number of small entities under the Regulatory Flexibility Act (5 U.S.C. 601 *et seq.*);
- does not contain any unfunded mandate or significantly or uniquely affect small governments, as described in the Unfunded Mandates Reform Act of 1995 (Pub. L. 104–4);
- does not have Federalism implications as specified in Executive Order 13132 (64 FR 43255, August 10, 1999);
- is not an economically significant regulatory action based on health or safety risks subject to Executive Order 13045 (62 FR 19885, April 23, 1997);
- is not a significant regulatory action subject to Executive Order 13211 (66 FR 28355, May 22, 2001);
- is not subject to requirements of Section 12(d) of the National Technology Transfer and Advancement Act of 1995 (15 U.S.C. 272 note) because application of those requirements would be inconsistent with the Clean Air Act; and
- does not provide EPA with the discretionary authority to address, as appropriate, disproportionate human health or environmental effects, using practicable and legally permissible methods, under Executive Order 12898 (59 FR 7629, February 16, 1994).

In addition, this rule does not have tribal implications as specified by Executive Order 13175 (65 FR 67249, November 9, 2000), because the SIP is not approved to apply in Indian country located in the state, and EPA notes that it will not impose substantial direct costs on tribal governments or preempt tribal law.

The Congressional Review Act, 5 U.S.C. 801 *et seq.,* as added by the Small Business Regulatory Enforcement Fairness Act of 1996, generally provides that before a rule may take effect, the agency promulgating the rule must submit a rule report, which includes a copy of the rule, to each House of the Congress and to the Comptroller General of the United States. Section 804, however, exempts from section 801 the following types of rules: Rules of particular applicability; rules relating to agency management or personnel; and rules of agency organization, procedure, or practice that do not substantially affect the rights or obligations of non-agency parties. 5 U.S.C. 804(3). Because this is a rule of particular applicability, EPA is not required to submit a rule report regarding this action under section 801.

Under section 307(b)(1) of the Clean Air Act, petitions for judicial review of this action must be filed in the United States Court of Appeals for the appropriate circuit by November 8, 2013. Filing a petition for reconsideration by the Administrator of this final rule does not affect the finality of this action for the purposes of judicial review nor does it extend the time within which a petition for judicial review may be filed, and shall not postpone the effectiveness of such rule or action. This action may not be challenged later in proceedings to enforce its requirements. (See section 307(b)(2).)

List of Subjects in 40 CFR Part 52

Environmental protection, Air pollution control, Incorporation by reference, Intergovernmental relations, Nitrogen dioxide, Reporting and recordkeeping requirements.

Dated: August 21, 2013.

H. Curtis Spalding,

Regional Administrator, EPA New England.

Part 52 of chapter I, title 40 of the Code of Federal Regulations is amended as follows:

PART 52—APPROVAL AND PROMULGATION OF IMPLEMENTATION PLANS

■ 1. The authority citation for part 52 continues to read as follows:

Authority: 42 U.S.C. 7401 et seq.

Subpart H—Connecticut

■ 2. Section 52.377 is amended by adding paragraph (m) to read as follows:

§ 52.377 Control strategy: Ozone.

* * * * *

(m) *Approval.* (1) Revisions to the State Implementation Plan submitted by the Connecticut Department of Environmental Protection on August 18, 2000, December 12, 2002, July 1, 2004, January 13, 2006. The revisions consist of 148 single source emission trading orders necessary for satisfying Reasonable Available Control Technology requirements for nitrogen oxides during specific time periods. All trading orders expired before January 1, 2013, with the exception of Trading Agreement and Order 8242, in paragraph (m)(1)(xlii) of this section, issued to PSEG Power Connecticut, LLC in Bridgeport, Connecticut on February 12, 2003. Trading Agreement and Order 8242 was issued to reflect a change in ownership at the source.

(i) Trading Agreement and Order No. 8116 Modification No. 1 issued to the Connecticut Resources Recovery Authority in Hartford on April 29, 1999.

(ii) Trading Agreement and Order No. 1494A issued to the Connecticut Resources Recovery Authority in Hartford on May 4, 2001.

(iii) Trading Agreement and Order No. 8116A issued to The Connecticut

Resources Recovery Authority in Hartford on March 18, 2003.

(iv) Trading Agreement and Order No. 8116B issued to The Connecticut Resources Recovery Authority in Hartford on April 11, 2005.

(v) Order No. 1494 Modification No. 2 issued to The Connecticut Light and Power Company in Branford, Greenwich, Hartford, Montville, Middletown, Milford, Preston, Norwalk, and Torrington on May 6, 1998.

(vi) Order No. 1494 Modification No. 3 Issued to The Connecticut Light and Power Company In Branford, Greenwich, Hartford, Montville, Middletown, Milford, Preston, Norwalk, and Torrington on February 3, 1999.

(vii) Consent Order No. 1494 Modification No. 4 issued to Connecticut Light and Power Company in Branford, Greenwich, Hartford, Montville, Middletown, Milford, Preston, Norwalk, and Torrington on April 29, 1999.

(viii) Order No. 1494 Modification No. 5 issued to The Connecticut Light and Power Company in Branford, Greenwich, Hartford, Montville, Middletown, Milford, Preston, Norwalk, and Torrington on November 29, 1999.

(ix) Order No. 1494 Modification No. 6 issued to The Connecticut Light and Power Company in Branford, Greenwich, Hartford, Montville, Middletown, Milford, Preston, Norwalk, and Torrington on April 30, 2000.

(x) Trading Agreement and Order No. 8154 Modification No. 1 issued to Combustion Engineering, Inc. in Windsor on June 3, 1998.

(xi) Trading Agreement and Order No. 8154 Modification No. 2 issued to Combustion Engineering, Inc. in Windsor on April 29, 1999.

(xii) Trading Agreement and Order No. 8154 Modification No. 3 issued to Combustion Engineering, Inc. in Windsor on April 21, 2002.

(xiii) Trading Agreement and Order No. 8154A issued to Combustion Engineering, Inc. in Windsor on April 26, 2003.

(xiv) Consent Order No. 1626 issued to Borough of Naugatuck in Naugatuck on February 14, 2001.

(xv) Consent Order No. 1626 Modification No. 1 issued to Borough of Naugatuck in Naugatuck on July 31, 2002.

(xvi) Trading Agreement and Order No. 8247 issued to Borough of Naugatuck in Naugatuck on April 26, 2003.

(xvii) Trading Agreement and Order No. 8159 issued to The Connecticut Light and Power Company in Milford on April 29, 1999.

(xviii) Trading Agreement and Order No. 8181 issued to Devon Power, LLC in Milford on January 12, 2000.

(xix) Trading Agreement and Order No. 8181A issued to Devon Power, LLC in Milford on April 22, 2003.

(xx) Trading Agreement and Order No. 8181A Modification No. 1 issued to Devon Power, LLC in Milford on March 21, 2005.

(xxi) Trading Agreement and Order No. 8219 issued to Devon Power, LLC in Milford on March 22, 2002.

(xxii) Trading Agreement and Order No. 8219A issued to Devon Power, LLC in Milford on April 30, 2003.

(xxiii) Trading Agreement and Order No. 8219A Modification No. 1 issued to Devon Power, LLC in Milford on September 16, 2004.

(xxiv) Trading Agreement and Order No. 8251 issued to Devon Power, LLC in Milford on September 15, 2003.

(xxv) Trading and Agreement Order No. 8251 Modification No. 1 issued to Devon Power, LLC in Milford on March 21, 2005.

(xxvi) Trading Agreement and Order No. 8109 issued to Hamilton Sundstrand Corporation in Windsor Locks on April 29, 2003.

(xxvii) Trading Agreement and Order No. 8093A issued to Pfizer, Inc. in Groton on April 29, 1999.

(xxviii) Trading Agreement and Order No. 8093B issued to Pfizer, Inc. in Groton on December 5, 2001.

(xxix) Trading Agreement and Order No. 8093C issued to Pfizer, Inc. in Groton on April 29, 2003.

(xxx) Trading Agreement and Order No. 8093C Modification No. 1 issued to Pfizer, Inc. in Groton on April 11, 2005.

(xxxi) Trading Agreement and Order No. 8136 issued to Pfizer, Inc. in Groton on April 29, 1999.

(xxxii) Trading Agreement and Order No. 8136A issued to Pfizer, Inc. in Groton on April 14, 2003.

(xxxiii) Trading Agreement and Order No. 8119 Modification No. 1 issued to City of Norwich Department of Public Utilities in Norwich on April 29, 1999.

(xxxiv) Trading Agreement and Order No. 8119A issued to City of Norwich Department of Public Utilities in Norwich on April 29, 2003.

(xxxv) Trading Agreement and Order No. 8119A Modification No. 1 issued to City of Norwich Department Of Public Utilities in Norwich on March 21, 2005.

(xxxvi) Trading Agreement and Order No. 8092 Modification No. 1 issued to The United Illuminating Company in Bridgeport on April 30, 1999.

(xxxvii) Trading Agreement and Order No. 8103 Modification No. 1 issued to The United Illuminating Company in Bridgeport on February 18, 1997.

(xxxviii) Trading Agreement and Order No. 8103 Modification No. 2 issued to The United Illuminating Company in Bridgeport on April 30, 1999.

(xxxix) Trading Agreement and Order No. 8177 Modification 1 issued to Wisvest-Connecticut, LLC in Bridgeport on March 12, 2001.

(xl) Trading Agreement and Order No. 8241 issued to PSEG Power Connecticut, LLC in Bridgeport on February 13, 2003.

(xli) Trading Agreement and Order No. 8241 Modification No. 1 issued to PSEG Power Connecticut, LLC in Bridgeport on September 15, 2004.

(xlii) Trading Agreement and Order No. 8242 issued to PSEG Power Connecticut, LLC in Bridgeport on February 13, 2003.

(xliii) Trading Agreement and Order No. 8243 issued to PSEG Power Connecticut, LLC in New Haven on February 13, 2003.

(xliv) Trading Agreement and Order No. 8244 issued to PSEG Power Connecticut, LLC in Bridgeport on February 13, 2003.

(xlv) Trading Agreement and Order No. 8244 Modification No. 1 issued to PSEG Power Connecticut, LLC in Bridgeport on March 21, 2005.

(xlvi) Trading Agreement and Order No. 8253 issued to PSEG Power Connecticut, LLC in Bridgeport on July 23, 2003.

(xlvii) Trading Agreement and Order No. 8253 Modification No. 1 issued to PSEG Power Connecticut, LLC in Bridgeport on September 15, 2004.

(xlviii) Trading Agreement and Order No. 8115 Modification No. 2 issued to University of Connecticut in Storrs on April 29, 1999.

(xlix) Trading Agreement and Order No. 8115B issued to University of Connecticut in Storrs on March 21, 2003.

(l) Trading Agreement and Order No. 8107 Modification No. 1 issued to Northeast Nuclear Energy Company in Waterford on April 29, 1999.

(li) Trading Agreement and Order No. 8107 Modification No. 2 issued to Northeast Nuclear Energy Company in Waterford on March 29, 2001.

(lii) Trading Agreement and Order No. 8152 issued to Northeast Nuclear Energy Company in Waterford on July 9, 1998.

(liii) Trading Agreement and Order No. 8152 Modification No. 1 issued to Northeast Nuclear Energy Company in Waterford on December 30, 1998.

(liv) Trading Agreement and Order No. 8152A issued to Northeast Nuclear Energy Company in Waterford on June 28, 1999.

(lv) Trading Agreement and Order No. 8221 issued to Dominion Nuclear

Connecticut, Inc. in Waterford on March 29, 2001.

(lvi) Trading Agreement and Order No. 8221A issued to Dominion Nuclear Connecticut, Inc. in Waterford on April 28, 2003.

(lvii) Trading Agreement and Order No. 8222 issued to Dominion Nuclear Connecticut, Inc. in Waterford on March 29, 2001.

(lviii) Trading Agreement and Order No. 8222A issued to Dominion Nuclear Connecticut, Inc. in Waterford on April 28, 2003.

(lix) Trading Agreement and Order No. 8180 issued to Connecticut Jet Power LLC in Branford, Greenwich, and Torrington on January 12, 2000.

(lx) Trading Agreement and Order No. 8180 Modification No. 1 issued to Connecticut Jet Power, LLC in Branford, Greenwich, and Torrington on May 7, 2002.

(lxi) Trading Agreement and Order No. 8180A issued to Connecticut Jet Power, LLC in Branford, Greenwich, and Torrington on April 22, 2003.

(lxii) Trading Agreement and Order No. 8180A Modification No. 1 issued to Connecticut Jet Power, LLC in Branford, Greenwich, and Torrington on March 21, 2005.

(lxiii) Trading Agreement and Order No. 8114 Modification No. 1 issued to Cytec Industries, Inc. in Wallingford on April 29, 1999.

(lxiv) Trading Agreement and Order No. 8114 Modification No. 2 issued to Cytec Industries, Inc. in Wallingford on May 26, 2001.

(lxv) Trading Agreement and Order No. 8114A issued to Cytec Industries, Inc. in Wallingford on April 24, 2003.

(lxvi) Trading Agreement and Order No. 8117 issued to Sprague Paperboard, Inc. in Versailles on December 10, 2002.

(lxvii) Trading Agreement and Order No. 8117A issued to Sprague Paperboard, Inc. in Versailles on September 29, 2003.

(lxviii) Trading Agreement and Order No. 8117B issued to Sprague Paperboard, Inc. in Versailles on April 25, 2005.

(lxix) Trading Agreement and Order No. 8157 issued to The Connecticut Light and Power Company in Middletown on April 29, 1999.

(lxx) Trading Agreement and Order No. 8160 issued to The Connecticut Light and Power Company in Middletown on April 29, 1999.

(lxxi) Trading Agreement and Order No. 8162 issued to The Connecticut Light and Power Company in Middletown on April 29, 1999.

(lxxii) Trading Agreement and Order No. 8182 issued to Middletown Power, LLC in Middletown on January 12, 2000.

(lxxiii) Trading Agreement and Order No. 8182A issued to Middletown Power, LLC in Middletown on April 22, 2003.

(lxxiv) Trading Agreement and Order No. 8182A Modification No. 1 issued to Middletown Power, LLC in Middletown on March 21, 2005.

(lxxv) Trading Agreement and Order No. 8213 issued to Middletown Power, LLC in Middletown on March 22, 2002.

(lxxvi) Trading Agreement and Order No. 8213A issued to Middletown Power, LLC in Middletown on April 30, 2003.

(lxxvii) Trading Agreement and Order No. 8213A Modification No. 1 issued to Middletown Power, LLC in Middletown on September 16, 2004.

(lxxviii) Trading Agreement and Order No. 8214 issued to Middletown Power, LLC in Middletown on March 22, 2002.

(lxxix) Trading Agreement and Order No. 8214A issued to Middletown Power, LLC in Middletown on April 30, 2003.

(lxxx) Trading Agreement and Order No. 8214A Modification No. 1 issued to Middletown Power, LLC in Middletown on September 16, 2004.

(lxxxi) Trading Agreement and Order No. 8215 issued to Middletown Power, LLC in Middletown on March 22, 2002.

(lxxxii) Trading Agreement and Order No. 8215A issued to Middletown Power, LLC in Middletown on April 30, 2003.

(lxxxiii) Trading Agreement and Order No. 8215A Modification No. 1 issued to Middletown Power, LLC in Middletown on September 16, 2004.

(lxxxiv) Consent Order No. 8227 issued to Middletown Power, LLC in Middletown on March 11, 2002.

(lxxxv) Trading Agreement and Order No. 8227A issued to Middletown Power, LLC in Middletown on April 26, 2003.

(lxxxvi) Trading Agreement and Order No. 8227A Modification 1 issued to Middletown Power, LLC in Middletown on July 18, 2003.

(lxxxvii) Trading Agreement and Order No. 8156 issued to The Connecticut Light and Power Company in Montville on April 29, 1999.

(lxxxviii) Trading Agreement and Order No. 8161 issued to The Connecticut Light and Power Company in Montville on April 29, 1999.

(lxxxix) Trading Agreement and Order No. 8183 issued to Montville Power, LLC in Montville on January 12, 2000.

(xc) Trading Agreement and Order No. 8183A issued to Montville Power, LLC in Montville on April 22, 2003.

(xci) Trading Agreement and Order No. 8183A Modification No. 1 issued to Montville Power, LLC in Montville on March 21, 2005.

(xcii) Trading Agreement and Order No. 8216 issued to Montville Power, LLC in Montville on March 22, 2002.

(xciii) Trading Agreement and Order No. 8216A issued to Montville Power, LLC in Montville on April 30, 2003.

(xciv) Trading Agreement and Order No. 8216A Modification No. 1 issued to Montville Power, LLC in Montville on September 16, 2004.

(xcv) Trading Agreement and Order No. 8217 issued to Montville Power, LLC in Montville on March 22, 2002.

(xcvi) Trading Agreement and Order No. 8217A issued to Montville Power, LLC in Montville on April 30, 2003.

(xcvii) Trading Agreement and Order No. 8217A Modification No. 1 issued to Montville Power, LLC in Montville on September 16, 2004.

(xcviii) Trading Agreement and Order No. 8158 issued to The Connecticut Light and Power Company in Norwalk on April 29, 1999.

(xcix) Trading Agreement and Order No. 8184 issued to Norwalk Power, LLC in Norwalk on January 12, 2000.

(c) Trading Agreement and Order No. 8184A issued to Norwalk Power, LLC in Norwalk on April 22, 2003.

(ci) Trading Agreement and Order No. 8184A Modification No. 1 issued to Norwalk Power, LLC in Norwalk on March 21, 2005.

(cii) Trading Agreement and Order No. 8218 issued to Norwalk Power, LLC in Norwalk on March 22, 2002.

(ciii) Trading Agreement and Order No. 8218A issued to Norwalk Power, LLC in Norwalk on April 30, 2003.

(civ) Trading Agreement and Order No. 8218A Modification No. 1 issued to Norwalk Power, LLC in Norwalk on September 16, 2004.

(cv) Trading Agreement and Order No. 8134 issued to United Technologies Corporation in East Hartford on January 24, 2000.

(cvi) Trading Agreement and Order No. 8134A issued to United Technologies Corporation in East Hartford on April 15, 2003.

(cvii) Trading Agreement and Order No. 8248 issued to United Technologies Corporation in East Hartford on August 19, 2003.

(cviii) Trading Agreement and Order No. 8175 issued to Northeast Generation Company in Berlin on February 1, 2000.

(cix) Trading Agreement and Order No. 8175 Modification No. 1 issued to Northeast Generation Company in Berlin on March 13, 2000.

(cx) Trading Agreement and Order No. 8175A issued to Northeast Generation Company in Berlin on April 28, 2003.

(cxi) Trading Agreement and Order No. 8175A Modification No. 1 issued to Northeast Generation Company in Berlin on April 11, 2005.

(cxii) Trading Agreement and Order No. 8102 Modification No. 1 issued to

The United Illuminating Company in New Haven on April 30, 1999.

(cxiii) Trading Agreement and Order No. 8153 issued to The United Illuminating Company in New Haven on April 30, 1999.

(cxiv) Trading Agreement and Order No. 8176 Modification No. 1 issued to Wisvest-Connecticut, LLC in New Haven on March 12, 2001.

(cxv) Trading Agreement and Order No. 8240 issued to PSEG Power Connecticut, LLC in New Haven on February 13, 2003.

(cxvi) Trading Agreement and Order No. 8240 Modification No. 1 issued to PSEG Power Connecticut, LLC in New Haven on September 16, 2004.

(cxvii) Trading Agreement and Order No. 8220 issued to Bristol-Meyers Squibb Company in Wallingford on September 23, 2001.

(cxviii) Trading Agreement and Order No. 8220A issued to Bristol-Meyers Squibb Company in Wallingford on March 27, 2003.

(cxix) Trading Agreement and Order No. 8220A Modification No. 1 issued to Bristol-Meyers Squibb Company in Wallingford on May 5, 2005.

(cxx) Trading Agreement and Order No. 8124 issued to Stone Container Corporation in Uncasville on January 15, 2002.

(cxxi) Trading Agreement and Order No. 8124A issued to Stone Container Corporation in Uncasville on March 12, 2003.

(cxxii) Trading Agreement and Order No. 8120 issued to Sikorsky Aircraft Corporation in Stratford on April 5, 2002.

(cxxiii) Trading Agreement and Order No. 8120A issued to Sikorsky Aircraft Corporation in Stratford on March 27, 2003.

(cxxiv) Trading Agreement and Order No. 8137 Modification No. 1 issued to Alliedsignal, Inc. and U.S. Army Tank-Automotive and Armaments Command in Stratford on July 8, 1997.

(cxxv) Trading Agreement and Order No. 8137 Modification No. 2 issued to U.S. Army Tank-Automotive and Armaments Command in Stratford on April 29, 1999.

(cxxvi) Trading Agreement and Order No. 8137A issued to United States Army Stratford Army Engine Plant in Stratford on May 1, 2003.

(cxxvii) Trading Agreement and Order No. 8188 issued to Allegheny Ludlum Corporation in Wallingford on May 28, 2002.

(cxxviii) Trading Agreement and Order No. 8112 issued to US Navy Submarine Base New London in Groton on April 30, 1999.

(cxxix) Trading Agreement and Order No. 8112A issued to United States Naval Submarine Base in Groton on May 7, 2003.

(cxxx) Trading Agreement and Order No. 8112A, Modification No. 1 issued to United States Naval Submarine Base in Groton on April 25, 2005.

(cxxxi) Trading Agreement and Order No. 8201CC issued to US Naval Submarine Base New London in Groton on July 12, 2002.

(cxxxii) Trading Agreement and Order No. 8230 issued to Jacobs Vehicle Systems, Inc. in Bloomfield on November 21, 2002.

(cxxxiii) Trading Agreement and Order No. 8110 Modification No. 1 issued to Yale University in New Haven on April 29, 1999.

(cxxxiv) Trading Agreement and Order No. 8123 Modification No. 1 issued to Algonquin Gas Transmission Company in Cromwell on April 29, 1999.

(cxxxv) Trading Agreement and Order No. 8123A issued to Algonquin Gas Transmission Company in Cromwell on April 30, 2003.

(cxxxvi) Trading Agreement and Order No. 8250 issued to Algonquin Windsor Locks, LLC in Windsor Locks on August 27, 2003.

(cxxxvii) Trading Agreement and Order No. 8261 issued to Algonquin Windsor Locks, LLC in Windsor Locks on April 8, 2005.

(cxxxviii) Trading Agreement and Order No. 8249 issued to Capitol District Energy Center Cogeneration Associates in Hartford on September 29, 2003.

(cxxxix) Trading Agreement and Order No. 8249 Modification No. 1 issued to Capitol District Energy Center Cogeneration Associates in Hartford on April 11, 2005.

(cxl) Trading Agreement and Order No. 8094 Modification No. 1 issued to Ogden Martin Systems of Bristol, Inc. in Bristol on April 29, 1999.

(cxli) Trading Agreement and Order No. 8095 Modification No. 1 issued to American Ref-Fuel Company of Southeastern Connecticut in Preston on April 29, 1999.

(cxlii) Trading Agreement and Order No. 8100 Modification No. 1 issued to Bridgeport Resco Company, Limited Partnership in Bridgeport on April 29, 1999.

(cxliii) Trading Agreement and Order No. 8101 Modification No. 1 issued to State of Connecticut Department of Mental Health and Addiction Services in Middletown on April 29, 1999.

(cxliv) Trading Agreement and Order No. 8111 Modification No. 1 issued to Uniroyal Chemical Company, Inc. in Naugatuck on April 29, 1999.

(cxlv) Trading Agreement and Order No. 8118 Modification No. 1 issued to South Norwalk Electric Works in South Norwalk on April 29, 1999.

(cxlvi) Trading Agreement and Order No. 8130 Modification No. 1 issued to Department of Public Works in Newton on April 29, 1999.

(cxlvii) Trading Agreement and Order No. 8132 Modification No. 1 issued to Bridgeport Hospital in Bridgeport on April 29, 1999.

(cxlviii) Trading Agreement and Order No. 8141 Modification No. 1 issued to The Town of Wallingford Department of Public Utilities in Wallingford on April 29, 1999.

(2) [Reserved]

[FR Doc. 2013–21474 Filed 9–6–13; 8:45 am]

BILLING CODE 6560–50–P

FEDERAL COMMUNICATIONS COMMISSION

47 CFR Part 54

[WC Docket No. 02–60; FCC 12–150]

Rural Health Care Support Mechanism

AGENCY: Federal Communications Commission.

ACTION: Final rule; announcement of effective date.

SUMMARY: In this document, the Commission announces that the Office of Management and Budget (OMB) has approved, for a period of three years, the information collection associated with the Commission's *Universal Service—Rural Health Care Program,* Report and Order (*Order*). This notice is consistent with the *Order,* which stated that the Commission would publish a document in the **Federal Register** announcing the effective date of those rules.

DATES: The amendments to 47 CFR 54.601(b), 54.603(a) and (b), 54.609(d)(2), 54.615(c), 54.619(a)(1) and (d), 54.623(a), 54.631(a) and (c), 54.632, 54.633(c), 54.634(b), 54.636, 54.639(d), 54.642, 54.643, 54.645, 54.646, 54.647, 54.648(b), and 54.675(d), published at 78 FR 13936, March 1, 2013, are effective September 9, 2013.

FOR FURTHER INFORMATION CONTACT: Linda Oliver, Wireline Competition Bureau at (202) 418–1732 or TTY (202) 418–0484. For additional information concerning the Paperwork Reduction Act information collection requirements contained in this document, send an email to *PRA@fcc.gov* or contact Judith B. Herman at 202–418–0214.

SUPPLEMENTARY INFORMATION: This document announces that, on August 22, 2013 (as amended August 23, 2013), OMB approved, for a period of three years, the information collection

requirements contained in the Commission's *Order,* FCC 12–150, published at 78 FR 13936, March 1, 2013. The OMB Control Number is 3060–0804. The Commission publishes this notice as an announcement of the effective date of the rules.

To request materials in accessible formats for people with disabilities (Braille, large print, electronic files, audio format), send an email to *fcc504@fcc.gov* or call the Consumer and Governmental Affairs Bureau at (202) 418–0530 (voice), (202) 418–0432 (TTY).

Synopsis

As required by the Paperwork Reduction Act of 1995 (44 U.S.C. 3507), the FCC is notifying the public that it received OMB approval on August 22, 2013 (as amended on August 23, 2013), for the information collection requirements contained in the Commission's rules at 47 CFR 54.601(b), 54.603(a) and (b), 54.609(d)(2), 54.615(c), 54.619(a)(1) and (d), 54.623(a), 54.631(a) and (c), 54.632, 54.633(c), 54.634(b), 54.636, 54.639(d), 54.642, 54.643, 54.645, 54.646, 54.647, 54.648(b), and 54.675(d).

Under 5 CFR part 1320, an agency may not conduct or sponsor a collection of information unless it displays a current, valid OMB Control Number.

No person shall be subject to any penalty for failing to comply with a collection of information subject to the Paperwork Reduction Act that does not display a current, valid OMB Control Number. The OMB Control Number is 3060–0804.

The foregoing notice is required by the Paperwork Reduction Act of 1995, Public Law 104–13, October 1, 1995, and 44 U.S.C. 3507.

The total annual reporting burdens and costs for the respondents are as follows:

OMB Control Number: 3060–0804.

OMB Approval Date: August 22, 2013 (as amended August 23, 2013).

OMB Expiration Date: August 31, 2016.

Title: Universal Service—Rural Health Care Program, WC Docket No. 02–60.

Form Number: FCC Forms 460, 461, 462, 463 (new FCC forms); 465, 466, 466–A and 467.

Type of Review: Revision of a currently approved collection.

Respondents: Business or other for-profit, not for profit institutions, federal government and state, local and tribal government.

Number of Respondents and Responses: 11,000 respondents; 54,041 responses.

Estimated Time per Response: 1.21 hours (average).

Frequency of Response: On occasion, one time, annual, quarterly and monthly reporting requirements and recordkeeping requirements.

Obligation To Respond: Required to obtain or retain benefits. Statutory authority for this information collection is contained in 47 U.S.C. 151, 154(i), 154(j), 201–205, 214, 254 and 403 of the Communications Act of 1934, as amended.

Total Annual Burden: 65,539 hours.

Total Annual Cost: N/A.

Privacy Impact Assessment: N/A.

Nature and Extent of Confidentiality: The Commission is not requesting that the respondents submit confidential information to the FCC. Respondents may, however, request confidential treatment for information they believe to be confidential under 47 CFR 0.459 of the Commission's rules. We note that the universal service administrator must preserve the confidentiality of all data obtained from respondents and contributors to the universal service support program mechanism; must not use the data except for purposes of administering the universal service support program; and must not disclose data in company-specific form unless directed to do so by the Commission.

Needs and Uses: In the December 2012 *Order,* FCC 12–150, published at 78 FR 13936, March 1, 2013, the Commission established the Healthcare Connect Fund, which reforms, expands, and modernizes the Rural Health Care program based on lessons learned from the Pilot Program. The Commission also established the Skilled Nursing Facilities Pilot (SNF Pilot) to test how to support broadband connections for skilled nursing facilities.

All the requirements herein are necessary to administer the Rural Health Care support mechanism (Health Care Connect Fund, Telecommunications Program, Internet Access Program, Pilot Program, and SNF Pilot), to determine the amount of support entities seeking funding are eligible to receive, to determine if entities are complying with the Commission's rules, and to prevent waste, fraud, and abuse. The information collected will also allow the Commission to evaluate the extent to which the Rural Health Care programs are meeting the statutory objectives specified in section 254(h) of the 1996 Act and the Commission's own performance goals for the Healthcare Connect Fund, and to evaluate the need and feasibility for any future revisions to program rules.

Federal Communications Commission.

Sheryl Todd,

Deputy Secretary.

[FR Doc. 2013–21812 Filed 9–6–13; 8:45 am]

BILLING CODE 6712–01–P

DEPARTMENT OF DEFENSE

Defense Acquisition Regulations System

48 CFR Parts 201 and 206

Defense Federal Acquisition Regulation Supplement; Technical Amendments

AGENCY: Defense Acquisition Regulations System, Department of Defense (DoD).

ACTION: Final rule.

SUMMARY: DoD is making technical amendments to the Defense Federal Acquisition Regulation Supplement (DFARS) to provide needed editorial changes.

DATES: *Effective Date:* September 9, 2013.

FOR FURTHER INFORMATION CONTACT: Mr. Manuel Quinones, Defense Acquisition Regulations System, OUSD (AT&L)DPAP (DARS), Room 3B855, 3060 Defense Pentagon, Washington, DC 20301–3060. Telephone 571–372–6088; facsimile 571–372–6094.

SUPPLEMENTARY INFORMATION: This final rule amends the DFARS as follows:

1. Corrects at 201.170(b) the email address for the submission of the rolling annual forecast of acquisitions that will be subject to DoD peer review.

2. Revises the section heading at 206.302–3 for consistency with the FAR.

List of Subjects in 48 CFR Parts 201 and 206

Government procurement.

Manuel Quinones,

Editor, Defense Acquisition Regulations System.

Therefore, 48 CFR parts 201 and 206 are amended as follows:

■ 1. The authority citation for 48 CFR parts 201 and 206 continues to read as follows:

Authority: 41 U.S.C. 1303 and 48 CFR chapter 1.

PART 201—CONTRACTOR QUALIFICATIONS

201.170 [Amended]

■ 2. Section 201.170 paragraph (a)(2) is amended by removing ''*peerreviews@osd.mil*'' and adding

''*osd.pentagon.ousd-atl.mbx.peer-reviews@mail*'' in its place.

PART 206—COMPETITION REQUIREMENTS

■ 3. Revise the section heading of 203.302–3 to read as follows:

206.302–3 Industrial mobilization, engineering, developmental, or research capability, or expert services.

[FR Doc. 2013–21835 Filed 9–6–13; 8:45 am]

BILLING CODE 5001–06–P

Proposed Rules

Federal Register

Vol. 78, No. 174

Monday, September 9, 2013

This section of the FEDERAL REGISTER contains notices to the public of the proposed issuance of rules and regulations. The purpose of these notices is to give interested persons an opportunity to participate in the rule making prior to the adoption of the final rules.

DEPARTMENT OF AGRICULTURE

Agricultural Marketing Service

7 CFR Part 27

[AMS–CN–13–0043]

RIN 0581–AD33

Cotton Futures Classification: Optional Classification Procedure

AGENCY: Agricultural Marketing Service, USDA.

ACTION: Proposed rule.

SUMMARY: The Agricultural Marketing Service (AMS) proposes regulatory amendments that would allow for the addition of an optional cotton futures classification procedure—identified and known as ''registration'' by the U.S. cotton industry and the Intercontinental Exchange (ICE). In response to requests from the U.S. cotton industry and ICE, AMS proposes to offer a futures classification option whereby cotton bales may be certificated for the purpose of an exchange's cotton futures contract using Smith-Doxey data to verify that submitted bales meet more restrictive quality requirements and age parameters established by that exchange. The implementation of ICE's Cotton Resolution No. 2 is scheduled to commence with the March 2014 contract month. It is anticipated that AMS would make the futures classification option available December 2013.

DATES: Comments must be received on or before October 9, 2013.

ADDRESSES: Interested persons may comment on the proposed rule using the following procedures:

- *Internet: http://www.regulations.gov.*
- *Mail:* Comments may be submitted by mail to: Darryl Earnest, Deputy Administrator, Cotton & Tobacco Programs, AMS, USDA, 3275 Appling Road, Room 11, Memphis, TN 38133. Comments should be submitted in triplicate. All comments should reference the docket number and the date and the page of this issue of the **Federal Register**. All comments will be available for public inspection during regular business hours at Cotton & Tobacco Program, AMS, USDA, 3275 Appling Road, Memphis, TN 38133. A copy of this notice may be found at: *www.ams.usda.gov/cotton/rulemaking.htm.*

FOR FURTHER INFORMATION CONTACT: Darryl Earnest, Deputy Administrator, Cotton & Tobacco Programs, AMS, USDA, 3275 Appling Road, Room 11, Memphis, TN 38133. Telephone (901) 384–3060, facsimile (901) 384–3021, or email *darryl.earnest@ams.usda.gov.*

SUPPLEMENTARY INFORMATION:

Executive Order 12866

This proposed rule has been determined to be not significant for purposes of Executive Order 12866; and, therefore has not been reviewed by the Office of Management and Budget (OMB).

Executive Order 12988

This proposed rule has been reviewed under Executive Order 12988, Civil Justice Reform. It is not intended to have retroactive effect. There are no administrative procedures that must be exhausted prior to any judicial challenge to the provisions of this rule.

Regulatory Flexibility Act

Pursuant to requirements set forth in the Regulatory Flexibility Act (RFA) (5 U.S.C. 601–612), AMS has considered the economic impact of this action on small entities and has determined that its implementation will not have a significant economic impact on a substantial number of small businesses.

The purpose of the RFA is to fit regulatory actions to the scale of businesses subject to such actions so that small businesses will not be disproportionately burdened. There are approximately sixty cotton merchant organizations of various sizes active in trading U.S. cotton. Cotton merchants voluntarily use the AMS cotton futures classification services under the Cotton Futures Act (Act) (7 U.S.C. 15b). Many of these cotton merchants are small businesses under the criteria established by the Small Business Administration (13 CFR § 121.201). Establishing the registration option for cotton futures classification will not significantly affect small businesses as defined in the RFA because:

(1) The established user fee for cotton futures classification services is $3.50 per bale (7 CFR 27.80). Users choosing the registration option would incur no additional charges;

(2) The established cotton futures classification fee represents a very small portion of the cost per-unit currently borne by those entities utilizing the service;

(3) The average price paid to producers for cotton from the 2012 crop was 72.05 cents per pound, making a 500 pound bale of cotton worth an average of $360.25. The current user fee for futures classification services, $3.50 per bale, is less than one percent of the average value of a bale of cotton;

(4) The fee for this service will not affect competition in the marketplace;

(5) The futures classification option is expected to streamline marketing and create logistical efficiencies for all entities utilizing this option; and

(6) The use of futures classification services are voluntary. For fiscal year 2012, there were 318,337 cotton futures samples (approximately 2.1 percent of the 2012 cotton crop) voluntarily submitted for the futures classification service.

Paperwork Reduction Act

In compliance with OMB regulations (5 CFR part 1320), which implement the Paperwork Reduction Act (PRA) (44 U.S.C. 3501), the information collection requirements contained in the provisions to be amended by this proposed rule have been previously approved by OMB and were assigned OMB control number 0581–0008, Cotton Classing, Testing, And Standards.

Background

The Act requires USDA-verified quality measurements for each bale to be included in futures contracts for the purpose of verifying that each bale meets the minimum quality requirements for cotton futures trading. Furthermore, the Act authorizes the charging of user fees required to recover the cost associated with providing futures quality verification services.

USDA was first directed to provide cotton classification services to producers of cotton under the Smith-Doxey Act of April 13, 1937 (Pub. L. 75–28). Therefore, the original classification of a cotton bale's sample and quality

data which results from this classification is commonly referred to as the Smith-Doxey classification or Smith-Doxey data. While cotton classification is not mandatory, practically every cotton bale grown in the United States today is classed by AMS under the authority of the Cotton Statistics and Estimates Act (7 U.S.C. 471–476) and the U.S. Cotton Standards Act (7 U.S.C. 51–65) and under regulations found in 7 CFR part 28—Cotton Classing, Testing, and Standards. The U.S. cotton industry uses Smith-Doxey data to assign quality-adjusted market values to U.S. cotton and market U.S. cotton both domestically and internationally. Smith-Doxey data is commonly used by the cotton merchant community to indicate which bales may be tenderable against a cotton futures contract.

Conventional procedures employed for verifying quality measurements for bales to be included in futures contracts consists of two futures classifications: (1) Initial futures classification and (2) final futures classification. AMS, Cotton and Tobacco Programs revised these procedures to incorporate Smith-Doxey data into the cotton futures classification process in March 2012 (77 FR 5379). When verified by a futures classification, Smith-Doxey data serves as an initial futures classification with the verifying futures classification serving as a final futures classification. The use of Smith-Doxey data significantly reduced the number of futures classifications required for many of the bales that were submitted for certification.

The successful incorporation of Smith-Doxey data into the futures classification procedures prompted the U.S. cotton industry and ICE to request that the AMS, Cotton and Tobacco Programs use Smith-Doxey data to certify that bales submitted for quality verification meet more restrictive quality requirements and age parameters set by ICE for use in a cotton futures contract. The U.S. cotton industry and ICE refer to this optional procedure the ''registration option''. Furthermore, the U.S. cotton industry and ICE have requested that AMS, Cotton and Tobacco Programs make this option available in December 2013 to coincide with the implementation of ICE's Cotton Resolution No. 2, which is scheduled to commence with the March 2014 contract month.

The established user fee for cotton futures classification services is $3.50 per bale (7 CFR 27.80). Customers choosing this cotton futures classification option would incur this charge. In the event that AMS determines that a bale submitted under this option fails to meet quality or age parameters set by the exchange inspection agency, the owner of the bale would be notified of the bale's failure.

AMS, Cotton and Tobacco Programs propose regulatory amendments that would allow the use of original Smith-Doxey data to certify that bales submitted for quality verification meet quality and age parameters set by the applicable exchange inspection agency. Accordingly, the definition of ''Classification'' in § 27.2, paragraph (n) would be amended to allow for the proposed registration option for the futures classification services. Also in § 27.2, the term ''Smith-Doxey data'' would be defined in new paragraphs (p).

A thirty day comment period is and deemed appropriate. It is anticipated that AMS would make the futures classification option available December 2013 to coincide with the implementation of ICE's Cotton Resolution No. 2.

List of Subjects in 7 CFR Part 27

Commodity futures, Cotton.

For the reasons set forth in the preamble, 7 CFR part 27 is proposed to be amended to read as follows:

PART 27—[Amended]

■ 1. The authority citation for 7 CFR part 27 is revised to read as follows:

Authority: 7 U.S.C. 15b, 7 U.S.C. 473a–b, 7 U.S.C. 1622(g).

■ 2. Amend § 27.2 to revise paragraph (n) and add paragraph (p) to read as follows:

§ 27.2 Terms Defined.

* * * * *

(n) *Classification.* The classification of any cotton shall be determined by the quality of a sample in accordance with the Universal Cotton Standards (the official cotton standards of the United States) for cotton property measurements of American Upland cotton. High Volume Instruments will determine all cotton property measurements except extraneous matter. Cotton classers authorized by the Cotton and Tobacco Programs will determine the presence of extraneous matter. Original Smith-Doxey data may serve as certification that bales submitted for quality verification meet quality and age parameters set by an applicable exchange inspection agency as a futures classification option.

* * * * *

(p) *Smith-Doxey data.* Data reflecting the original classification of a cotton bale provided to producers of cotton under the Smith-Doxey Act of April 13, 1937 (Pub. L. 75–28).

* * * * *

Dated: August 30, 2013.

Rex A. Barnes,

Associate Administrator, Agricultural Marketing Service.

[FR Doc. 2013–21658 Filed 9–6–13; 8:45 am]

BILLING CODE 3410–02–P

DEPARTMENT OF THE TREASURY

Internal Revenue Service

26 CFR Part 1

[REG–161948–05]

RIN 1545–BF43

Limitations on the Importation of Net Built-In Losses

AGENCY: Internal Revenue Service (IRS), Treasury.

ACTION: Notice of proposed rulemaking.

SUMMARY: This document contains proposed regulations under sections 334(b)(1)(B) and 362(e)(1) of the Internal Revenue Code of 1986 (Code). The proposed regulations apply to certain nonrecognition transfers of loss property to corporations that are subject to Federal income tax. The proposed regulations affect the corporations receiving the loss property. This document also invites comments from the public regarding these proposed regulations.

DATES: Written or electronic comments and a request for a public hearing must be received by December 9, 2013.

ADDRESSES: Send submissions to CC:PA:LPD:PR (REG 161948–05), Room 5203, Internal Revenue Service, P.O. Box 7604, Ben Franklin Station, Washington, DC 20044. Submissions may be hand-delivered Monday through Friday between the hours of 8 a.m. and 4 p.m. to CC:PA:LPD:PR (REG–161948–05), Courier's Desk, Internal Revenue Service, 1111 Constitution Avenue NW., Washington, DC, or sent electronically, via the Federal eRulemaking Portal at *www.regulations.gov* (IRSREG–161948–05).

FOR FURTHER INFORMATION CONTACT: Concerning the proposed regulations, John P. Stemwedel (202) 622–7790 or Theresa A. Abell (202) 622–7000, and, concerning submissions of comments and requests for a public hearing, Oluwafunmilayo (Funmi) Taylor at (202) 622–7180 (not toll free numbers).

SUPPLEMENTARY INFORMATION:

Paperwork Reduction Act

The collection of information contained in this notice of proposed rulemaking revises a collection of information approved by the Office of Management and Budget in accordance with the Paperwork Reduction Act of 1995 (44 U.S.C. 3507(d)) under control number 1545–2019. Comments on the revised collection of information should be sent to the Office of Management and Budget, Attn: Desk Officer for the Department of the Treasury, Office of Information and Regulatory Affairs, Washington, DC 20503, with copies to the Internal Revenue Service, Attn: IRS Reports Clearance Officer, SE:W:CAR:MP:T:T:SP, Washington, DC 20224. Comments on the collection of information should be received by November 8, 2013. Comments are specifically requested concerning:

Whether the proposed revised collection of information is necessary for the proper performance of the functions of the Internal Revenue Service, including whether the information will have practical utility;

The accuracy of the estimated burden associated with the proposed collection of information;

How the quality, utility and clarity of the information to be collected may be enhanced;

How the burden of complying with the proposed collection of information may be minimized, including through the application of automated collection techniques or other forms of information technology; and

Estimates of capital or start-up costs and costs of operation, maintenance, and purchase of service to provide information.

The revised collection of information in these proposed regulations is in §§ 1.332–6, 1.351–3, and 1.368–3. By requiring that taxpayers separately report the fair market value and basis of property (including stock) described in section 362(e)(1)(B) and in 362(e)(2)(A) that is transferred in a tax-free transaction, this revised collection of information aides in identifying transactions within the scope of sections 334(b)(1)(B), 362(e)(1), and 362(e)(2) and thereby facilitates the IRS' verification that taxpayers are complying with sections 334(b)(1)(B), 362(e)(1), and 362(e)(2). The respondents will be corporations and their shareholders.

Revised estimated total annual reporting burden: 375,000 hours.

Revised estimated average annual burden hours per respondent: 1.25 hours.

Estimated number of respondents: 225,000 (of the originally estimated 350,000; original 0.75 hour estimate unchanged for the remaining 125,000 respondents).

Estimated frequency of responses: once.

An agency may not conduct or sponsor, and a person is not required to respond to, a collection of information unless the collection of information displays a valid control number.

Books or records relating to a collection of information must be retained as long as their contents may become material in the administration of any internal revenue law. Generally, tax returns and tax return information are confidential, as required by section 6103.

Background

Sections 334(b)(1)(B) and 362(e)(1) (the anti-loss importation provisions) were enacted in the American Jobs Creation Act of 2004 (Pub. L. 108–357, 188 Stat. 1418 (2004)) to prevent erosion of the corporate tax base through the importation of loss in nonrecognition transfers. This notice of proposed rulemaking proposes regulations under both of these anti-loss importation provisions.

Explanation of Provisions

1. The Anti-Loss Importation Provisions: Sections 334(b)(1)(B) and 362(e)(1)

Section 334(b)(1)(B) applies to corporate acquisitions of loss property in liquidations described in section 332 (complete liquidation of subsidiary). Section 362(e)(1) applies to corporate acquisitions of loss property in transactions described in section 362(a) (transactions to which section 351 applies and acquisitions of property as paid-in surplus or contributions to capital, each a section 362(a) transaction) and in transactions described in section 362(b) (reorganizations). The application and effect of the anti-loss importation provisions are materially identical, and so the proposed regulations use the same nomenclature and operating rules for both anti-loss importation provisions.

The anti-loss importation provisions apply when a corporation acquires property that is described in section 362(e)(1)(B) in a transaction described in section 332, 362(a), or 362(b), and, under the generally applicable basis rules (other than the anti-loss duplication rule in section 362(e)(2)), the acquiring corporation (Acquiring) would take the property with an aggregate basis in excess of ''value'' (generally equal to fair market value under the proposed regulations; see paragraph 1.b.ii. of this preamble). When an anti-loss importation rule applies, Acquiring's basis in each such property is equal to the property's value. To the extent Acquiring receives property in the transaction that is not subject to the anti-loss importation rules, Acquiring's basis in the property is determined under generally applicable basis rules, including section 362(e)(2).

Property is described in section 362(e)(1)(B) (designated ''importation property'' in the proposed regulations) if two conditions are satisfied. First, any gain or loss recognized on a disposition of the property would not be subject to Federal income tax in the hands of the transferor immediately before the transfer. Section 362(e)(1)(B)(i). Second, any gain or loss recognized on a disposition of the property would be subject to Federal income tax in the hands of the transferee immediately after the transfer. Section 362(e)(1)(B)(ii).

Since the enactment of the anti-loss importation provisions, a number of questions have arisen concerning their application. The principal concern has been the determination of whether property is importation property, but various other questions (discussed subsequently in this preamble) have also been raised regarding the application of the anti-loss importation provisions and their interaction with other rules of law. To address these issues, the proposed regulations provide a framework for identifying importation property and determining whether the transfer of the property is a transaction subject to the anti-loss importation provisions (designated a ''loss importation transaction'' under the proposed regulations).

a. Importation Property

The proposed regulations use a hypothetical sale analysis to identify importation property. Under this approach, the actual tax treatment of any gain or loss that would be recognized on a sale of the property, first by the transferor immediately before and then by Acquiring immediately after the transfer, determines whether an individual property is importation property. If any gain or loss that would be recognized on a hypothetical sale of the property by the transferor immediately before the transfer would not be subject to Federal income tax in the hands of the transferor, the first condition for classification as importation property is satisfied. If any gain or loss that would be recognized on a hypothetical sale of the property by Acquiring immediately

after the transfer would be subject to Federal income tax in the hands of Acquiring, the second condition for classification as importation property is satisfied. Property is importation property only if both conditions are satisfied.

In general, the determination is made by reference to the tax treatment of the hypothetical seller of the transferred or acquired property, that is, whether the hypothetical seller would take the gain or loss into account in determining its Federal income tax liability. This determination must take into account all relevant facts and circumstances. The proposed regulations include a number of examples illustrating this approach. Thus, in one example, a tax-exempt entity transfers property to a taxable domestic corporation, and the determination takes into account whether the transferor, though generally tax-exempt, would nevertheless be required to include the amount of the gain or loss in unrelated business taxable income under sections 511 through 514 of the Code. In other examples, a foreign corporation transfers property to a taxable domestic corporation and the determination takes into account whether the foreign corporation would be required to include the amount of gain or loss under section 864 or 897 as income effectively connected with, or treated as effectively connected with, the conduct of a U.S. trade or business. Although the examples assume there is no applicable income tax treaty, in the case of an applicable income tax treaty, the determination of whether property is importation property would take into account whether the transferor would be taxable under the business profits article or gains article of the income tax treaty.

i. Partnerships, S Corporations, Grantor Trusts as Hypothetical Seller

Although the general rule in the proposed regulations looks solely to the tax treatment of the hypothetical seller, a modified rule applies if a hypothetical seller is a partnership, a small business corporation that has elected under section 1362(a) to be an S corporation, or a grantor trust. In these cases, the determination is made by reference to the tax treatment of the gain or loss as taken into account by the partners, shareholders, or owners of the entities. The modified rule recognizes that, in these cases, the Code provides that the gain or loss on the hypothetical sale would be included by the partner, shareholder, or owner, and would not be taxable to the hypothetical seller, irrespective of whether any amount is actually distributed to such other person. See section 701 (partnership not subject to tax), flush language in section 362(e)(1)(B) (partners treated as owning partnership property); sections 1363 and 1366 (S corporation's income generally taxable to shareholders, not S corporation); section 671 (grantor or other person treated as owning trust property).

If an organizing instrument assigns gain and loss to partners or beneficiaries in different amounts, including by reason of a special allocation under a partnership agreement, the proposed regulations make clear that the hypothetical sale model makes the determination of whether gain or loss is subject to Federal income tax by reference to the person to whom, under the terms of the instrument, the hypothetical gain or loss would actually be allocated, taking into account the entity's net gain or loss actually recognized in the tax period in which the transaction occurs.

ii. Other Pass-Through Entities: Anti-Avoidance Rule

In certain circumstances, the Code permits distributions to effect a similar shifting of tax consequences. For example, under sections 651 and 652, and sections 661 and 662, distributions made by a trust are deducted from the trust's income and included in the beneficiary's (or beneficiaries') income. Certain domestic corporations are also able to shift tax consequences by distributing income or gain from a property sale. These corporations include regulated investment companies (RICs, as defined in section 851(a)), real estate investment trusts (REITs, as defined in section 856(a)), and domestic corporations taxable as cooperatives (see section 1381).

The IRS and the Treasury Department are concerned that disregarding the effects of this shifting of tax liability would in certain circumstances undermine the anti-importation provisions. However, the IRS and the Treasury Department are also concerned that applying a look-through rule in all such cases would present a significant administrative burden.

Accordingly, the proposed regulations contain an anti-avoidance rule that applies to domestic trusts, estates, RICs, REITs, and cooperatives that directly or indirectly transfer property (including through other such entities) in a section 362 transaction, if the property had been directly or indirectly transferred to or acquired by the entity as part of a plan to avoid the application of the anti-importation provisions. For purposes of this rule, it is immaterial who had the plan to avoid the anti-importation provisions. When the anti-avoidance rule applies, the domestic entity, which, absent application of the anti-avoidance rule, would be treated under these regulations as subject to Federal income tax, is treated as subject to a look-through rule. Under the look-through rule, the entity is presumed to distribute the proceeds of the hypothetical sale (which, for this purpose, are presumed to be an amount greater than zero), and, to the fullest extent permitted by the terms of its organizing instrument, it is presumed to make the distributions to persons that would not take distributions from the entity into account in determining a Federal income tax liability. If an interest in such an entity is held indirectly through one or more other such entities, the principles of this rule apply to look to the ultimate owners of the interest. The determination of whether the property is importation property is then made by reference to the deemed distributees or, in the case of tiered entities, to the ultimate deemed distributees.

To illustrate, assume 90 percent of a REIT's shares are owned by persons that would not take into account any gain or loss in determining a Federal income tax liability and that each share has an equal right to any distribution by the REIT. The REIT holds property that was transferred to the REIT as part of a plan to avoid the application of the anti-importation rule to a section 362 transaction. At a time when the acquired property has a built-in loss, the REIT transfers the property to a domestic corporation in a section 362 transaction. In this case, the anti-avoidance rule would apply. Thus, the REIT is presumed to distribute all the proceeds of the hypothetical sale of the property transferred in the section 362 transaction, and the determination of whether any gain or loss on that hypothetical sale would be taken into account in determining a Federal income tax liability is made by reference to the distributee REIT shareholders. Thus, 90 percent of the property transferred in the section 362 transaction would be importation property. Alternatively, assume that the property was originally acquired (as part of a plan to avoid the application of the anti-importation rule to a section 362 transaction) by a trust whose trustee has discretion to distribute all or a portion of the trust's gain or loss to a person that would not take any amount of such distribution into account in determining a Federal income tax liability and, when the property has a built-in loss, the trust transfers the property to a domestic corporation in a section 362 transaction.

In this case, all of the property transferred in the section 362 transaction would be importation property because the trustee could distribute all of the proceeds from the hypothetical sale to a person that would not take the distribution into account in determining a Federal income tax liability.

The IRS and the Treasury Department continue to study whether a look-through approach should be generally applied to trusts and request comments on the need for, and potential scope of, such a rule.

iii. Gain or Loss Affecting Certain Income Inclusions

Practitioners have raised numerous questions regarding the treatment of property held by or transferred to controlled foreign corporations (CFC), as defined in section 957 (taking into account section 953(c)). Because the general rule looks to the tax treatment of the hypothetical seller, and no exception applies for CFCs, the general operation of the proposed regulations would not treat such amounts as subject to Federal income tax. Nevertheless, because the characterization of gain or loss that would be taken into account in determining a potential income inclusion under section 951(a) has generated some concern among practitioners, the proposed regulations include an express provision stating that gain or loss recognized by a CFC is not considered subject to Federal income tax solely by reason of an income inclusion under section 951(a). The proposed regulations include a similar provision to clarify that gain or loss recognized by a passive foreign investment company, as defined in section 1297(a), is also considered not subject to Federal income tax notwithstanding that it could affect an inclusion under section 1293(a). Comments are specifically requested on this approach.

iv. Gain or Loss Taxed to More Than One Person

If any gain or loss realized on a hypothetical sale would be includible in income by more than one person, the proposed regulations treat such property as tentatively divided into separate portions in proportion to the allocation of gain or loss to each person. Tentatively divided portions are treated and analyzed in the same manner as any other property for purposes of applying the anti-importation provisions. (See paragraph c. of this preamble for an illustration of the application of this rule.) Thus, the generally applicable rules determine whether a portion of tentatively divided property is importation property, and, if the tentatively divided portion is importation property, it is taken into account (as described subsequently in this preamble) with all other importation property to determine whether the transaction is a loss importation transaction.

b. Loss Importation Transaction

Once the importation property has been identified, Acquiring determines the aggregate basis that it would have in all importation property acquired in the transaction (including the tentatively divided portions of transferred property), without regard to the anti-loss importation provisions or section 362(e)(2). If the aggregate basis of the importation property exceeds such property's aggregate value, the transaction is a loss importation transaction and subject to the anti-loss importation provisions. If the aggregate basis of importation property does not exceed such property's value, the anti-loss importation provisions have no further application.

i. Aggregate, Not Transferor-by-Transferor, Approach

Under section 362(e)(1) and the proposed regulations, the determination of whether a section 362 transaction is a loss importation transaction is made by reference to the net amount of built-in gain and built-in loss in all importation property acquired from all transferors in the transaction. This approach differs from the transferor-by-transferor approach of section 362(e)(2), which expressly focusses on the net built-in loss transferred by a particular transferor in a section 362(a) transaction.

ii. Valuing Partnership Interests

In general, the anti-loss importation rules do not take liabilities into account in determining the value of transferred property and, thus, whether the transfer of such property is a transfer of loss property.

However, in both informal inquiries and written comments, practitioners have raised concerns about the effect of this rule when the property transferred is an interest in a partnership with liabilities. In particular, practitioners are concerned that the inclusion of a partner's share of partnership liabilities in outside basis may create the appearance of a built-in loss because partnership liabilities do not correspondingly increase the value of the interest. The amount of cash at which the partnership interest would change hands between a willing buyer and willing seller, neither being under any compulsion to buy or sell and both having reasonable knowledge of relevant facts, should reflect the appropriate measure of fair market value. When a partnership interest is sold, the amount realized may include a share of partnership liabilities from which the transferor is discharged, which is generally equal to the amount of liabilities included in the transferor's outside basis. As such, the sale of a partnership interest properly accounts for the transferee partner's share of partnership liabilities and therefore, reflects the value of that partnership interest.

To address this issue, the proposed regulations generally adopt the approach proposed by commentators and modify the definition of ''value'' (generally, fair market value) to take liabilities into account when determining whether a partnership interest is a loss asset. However, because there can be differences between Transferor's share of partnership liabilities and Acquiring's share of partnership liabilities, the proposed regulations provide that the value of a partnership interest is the sum of cash that Acquiring would receive for such interest, increased by any § 1.752–1 liabilities (as defined in § 1.752–1(a)(4)) of the partnership that are allocated to Acquiring with regard to such transferred interest under section 752. The proposed regulations include an example that illustrates the application and effect of this rule. The proposed regulations also clarify that any section 743(b) adjustment to be made as a result of the transaction is made after any section 362(e) basis adjustment.

c. Acquiring's Basis in Acquired Property

If a transaction is a loss importation transaction, Acquiring's basis in each importation property received (including the tentatively divided portions of property determined to be importation property) is an amount equal to value, notwithstanding the general rules in sections 334(b)(1)(B), 362(a), and 362(b). This rule applies to all importation property, regardless of whether the property's value is greater or less than its basis prior to the loss importation transaction.

Immediately following the application of the anti-loss importation provisions (and prior to any application of section 362(e)(2)), any property that was treated as tentatively divided for purposes of applying these provisions ceases to be treated as divided and is treated as one undivided property (re-constituted property) with a basis equal to the sum

of the bases of the portions determined under the anti-importation provision and the bases of all other portions determined under generally applicable provisions (other than section 362(e)(2)). For example, assume that property is transferred in a section 362(a) transaction and the property is treated as tentatively divided for purposes of applying section 362(e)(1) (see paragraph a.iv. of this preamble). Further assume that one tentatively divided portion (basis $125, value $100) is determined to be importation property and the other (basis $125, value $100) is not. Finally, assume that, the aggregate basis of all importation property transferred in the transaction (including the $125 basis of the tentatively divided portion) is $900 and the aggregate value of all importation property (including the $100 value of the tentatively divided portion) is only $800. Thus, the importation property has a net loss, the transaction is a loss importation transaction, and the basis of each importation property is equal to its value. Accordingly, immediately after the application of section 362(e)(1), the tentatively divided property is treated as one single property with a basis of $225 ($100 basis in the importation portion plus $125 basis in the non-importation portion).

If the transaction is described in section 362(a), the transferred property (including the re-constituted property that was tentatively divided for purposes of applying section 362(e)(1)) is then aggregated on a transferor-by-transferor basis to determine whether further adjustment will be required to the bases of loss property under section 362(e)(2). Therefore in the example in the preceding paragraph, after the application of section 362(e)(1), the provisions of section 362(e)(2) may apply to adjust the basis of the property further because the transfer is a section 362(a) transaction. The proposed regulations include a cross-reference to section 362(e)(2) as well as examples illustrating the application of both sections 362(e)(1) and section 362(e)(2) to situations involving multiple transferors and multiple properties that are not all importation properties. Because section 362(e)(2) only applies to transactions described in section 362(a), section 362(e)(2) has no application to liquidations or to reorganizations that do not include a transaction described in section 362(a). The proposed regulations include examples illustrating the interaction of these provisions.

2. Filing Requirements

To facilitate the administration of both the anti-loss importation provisions and the anti-duplication provisions in section 362(e)(2), the proposed regulations modify the reporting requirements applicable in all affected transactions (section 332 liquidations and transactions described in section 362(a) or section 362(b)) to require taxpayers to identify the basis and value of property subject to those sections.

3. Modifications to Liquidation Regulations

The proposed regulations also include several modifications to the regulations applicable to corporate liquidations. These modifications are not changes to current substantive law; they are intended solely to update the regulations to reflect certain statutory changes. The statutory changes reflected in these modifications include the repeal of the *General Utilities* doctrine (reflected in the modification of sections 334(a) and 337(a), and the repeal of sections 333 and 334(c)), the removal of former section 334(b)(2) (replaced by section 338), and the relocation of former section 332(c) (subsidiary indebtedness) to current section 337(b). In response to certain regulatory changes, the proposed regulations also add several cross-references to regulations under section 367 and 897 to highlight the treatment of certain transfers between foreign corporations.

The proposed regulations do not address the regulations under section 346 and no inference should be drawn from the omission of a proposal under that section.

Effective/Applicability Date

These regulations are generally proposed to apply to transactions occurring on or after the date the regulations are published as final regulations in the **Federal Register**, unless completed pursuant to a binding agreement that was in effect immediately before the date such final regulations are published and all times afterwards. It is also proposed that taxpayers would be permitted to apply the final regulations (when published) to transactions occurring after October 22, 2004.

Special Analyses

It has been determined that this notice of proposed rulemaking is not a significant regulatory action as defined in Executive Order 12866, as supplemented by Executive Order 13563. Therefore, a regulatory assessment is not required. It has also been determined that section 553(b) of the Administrative Procedure Act (5 U.S.C. chapter 5) does not apply to these regulations. Further, it is hereby certified that these proposed regulations will not have a significant economic impact on a substantial number of small entities. This certification is based on the fact that the collection of information requirement in these regulations modifies an existing collection of information by requiring that certain information be reported separately instead of in the aggregate. Although there may be an increase in reporting burden, the increased burden is expected to be minimal because taxpayers should have ready access to the requested information as the proposed regulations would not require taxpayers to report or maintain records on information that is not, in the aggregate, already required to be reported and maintained under the current regulations. Accordingly, a Regulatory Flexibility Analysis under the Regulatory Flexibility Act (5 U.S.C. chapter 6) is not required. Pursuant to section 7805(f) of the Code, this notice of proposed rulemaking has been submitted to the Chief Counsel for Advocacy of the Small Business Administration for comment on its impact on small business.

Comments and Requests for Public Hearing

Before these proposed regulations are adopted as final regulations, consideration will be given to any written comments (a signed original and eight (8) copies) or electronic comments that are timely submitted to the IRS. Alternatively, taxpayers may submit comments electronically via the Federal e-Rulemaking Portal at *www.regulations.gov* (IRS REG–161948–05). The IRS and the Treasury Department request comments on all aspects of the proposed regulations. Comments are specifically requested on the appropriate treatment of transactions subject to both section 367(b) and either section 334(b)(1)(B) or 362(e)(1). Comments are also specifically requested on what effect a basis reduction required under section 334(b)(1)(B) or section 362(e)(1) may have on earnings and profits and any inclusion required under § 1.367(b)–3. All comments that are submitted by public will be available for public inspection and copying at *www.regulations.gov* or upon request. A public hearing may be scheduled if requested in writing by any person who timely submits comments. If a public hearing is scheduled, notice of the date,

time, and place of the hearing will be published in the **Federal Register**.

Drafting Information

The principal author of these regulations is John P. Stemwedel of the Office of Associate Chief Counsel (Corporate), IRS. However, other personnel from the IRS and the Treasury Department participated in their development.

List of Subjects in 26 CFR Part 1

Income taxes, Reporting and recordkeeping requirements.

Proposed Amendments to the Regulations

Accordingly, 26 CFR part 1 is proposed to be amended as follows:

PART 1—INCOME TAXES

■ **Paragraph 1.** The authority citation for part 1 is amended by adding entries to read in part as follows:

Authority: 26 U.S.C. 7805 * * *

■ **Par. 2.** Section 1.332–6 is amended by revising paragraph (a)(3) and adding a new sentence at the end of paragraph (e) to read as follows:

§ 1.332–6 Records to be kept and information to be filed with return.

(a) * * *

(3) The fair market value and basis of assets of the liquidating corporation that have been or will be transferred to any recipient corporation, aggregated as follows:

(i) Importation property distributed in a loss importation transaction, as defined in § 1.362–3(c)(2) and (c)(3) (except that ''section 332 liquidation'' is substituted for ''section 362 transaction''), respectively;

(ii) Property with respect to which gain or loss was recognized on the distribution;

(iii) Property not described in paragraph (a)(3)(i) or paragraph (a)(3)(ii) of this section;

* * * * *

(e) *Effective/applicability date.* * * * Paragraph (a)(3) of this section applies to any taxable year beginning on or after these regulations are published as final regulations in the **Federal Register**, unless effected pursuant to a binding agreement that was in effect prior to that date and at all times thereafter.

■ **Par. 3.** Section 1.332–7 is amended by adding a new sentence after the first sentence of the paragraph to read as follows:

§ 1.332–7 Indebtedness of subsidiary to parent.

* * * See section 337(b)(1) (for any taxable year beginning on or after these regulations are published as final regulations in the **Federal Register**).

* * *

■ **Par. 4.** Section 1.334–1 is revised to read as follows:

§ 1.334–1 Basis of property received in liquidations.

(a) *In general.* Section 334 sets forth rules for determining a distributee's basis in property received in a distribution in complete liquidation of a corporation. The general rule is set forth in section 334(a) and provides that, if property is received in a distribution in complete liquidation of a corporation and if gain or loss is recognized on the receipt of the property, then the distributee's basis in the property is the fair market value of the property at the time of the distribution. However, if property is received in a complete liquidation to which section 332 applies, including property received in satisfaction of an indebtedness described in section 337(b)(1), see section 334(b)(1) and paragraph (b) of this section.

(b) *Liquidations under section 332*—(1) *General rule.* Except as otherwise provided in paragraph (b)(2) or (b)(3) of this section, if a corporation (P) meeting the ownership requirements of section 332(b)(1) receives property from a subsidiary (S) in a complete liquidation to which section 332 applies (section 332 liquidation), including property received in a transfer in satisfaction of indebtedness that satisfies the requirements of section 337(b)(1), P's basis in the property received is the same as S's basis in the property immediately before the property was distributed. However, see § 1.460–4(k)(3)(iv)(B)(*2*) for rules relating to adjustments to the basis of certain contracts accounted for using a long-term contract method of accounting that are acquired in a section 332 liquidation.

(2) *Basis in property with respect to which gain or loss was recognized.* Except as otherwise provided in the Internal Revenue Code and regulations, if S recognizes gain or loss on the distribution of property to P in a section 332 liquidation, P's basis in that property is the fair market value of the property at the time of the distribution. Section 334(b)(1)(A) (certain tax-exempt distributions under section 337(b)(2)); see also, for example, § 1.367(e)–2(b)(3)(i).

(3) *Basis in importation property received in loss importation transaction*—(i) *Purpose.* The purpose of section 334(b)(1)(B) and this paragraph (b)(3) is to prevent P from importing a net built-in loss in a transaction described in section 332. See paragraph (b)(3)(iii)(A) of this section for definitions of terms used in this paragraph (b)(3).

(ii) *Determination of basis.* Notwithstanding paragraph (b)(1) of this section, if a section 332 liquidation is a loss importation transaction, P's basis in each importation property received from S in the liquidation is an amount that is equal to the value of the property. The basis of property received in a section 332 liquidation that is not importation property received in a loss importation transaction is determined under generally applicable basis rules without regard to whether the liquidation also involves the receipt of importation property in a loss importation transaction.

(iii) *Operating rules*—(A) *In general.* For purposes of section 334(b)(1)(B) and this paragraph (b)(3), the provisions of § 1.362–3 (basis of importation property received in a loss importation transaction) apply, adjusted as appropriate to apply to section 332 liquidations. Thus, when used in this paragraph (b)(3), the terms ''importation property,'' ''loss importation transaction,'' and ''value'' have the same meaning as in § 1.362–3(c)(2), (c)(3) and (c)(4), respectively, except that ''section 332 liquidation'' is substituted for ''section 362 transaction.'' Similarly, when gain or loss on property would be owned or treated as owned by multiple persons, the provisions of § 1.362–3(d)(2) apply to tentatively divide the property in applying this section, substituting ''section 332 liquidation'' for ''section 362 transaction'' and making such other adjustments as necessary.

(B) *Time for making determinations.* For purposes of section 334(b)(1)(B) and this paragraph (b)(3)—

(*1*) *P's basis in distributed property.* P's basis in each property S distributes to P in the section 332 liquidation is determined immediately after S distributes each such property;

(*2*) *Value of distributed property.* The value of each property S distributes to P in the section 332 liquidation is determined immediately after S distributes the property;

(*3*) *Importation property.* The determination of whether each property distributed by S is importation property is made as of the time S distributes each such property;

(*4*) *Loss importation transaction.* The determination of whether a section 332 liquidation is a loss importation transaction is made immediately after S makes the final liquidating distribution to P.

(iv) *Examples.* The examples in this paragraph (b)(3)(iv) illustrate the application of section 334(b)(1)(B) and the provisions of this paragraph (b)(3). Unless the facts indicate otherwise, the examples use the following nomenclature and assumptions: USP is a domestic corporation that has not elected to be an S corporation within the meaning of section 1361(a)(1); FC, CFC1, and CFC2 are controlled foreign corporations within the meaning of section 957(a), which are not engaged in a U.S. trade or business, have no U.S. real property interests, and have no other relationships, activities, or interests that would cause their property to be subject to Federal income taxation; there is no applicable income tax treaty; and all persons and transactions are unrelated. All other relevant facts are set forth in the examples:

Example 1. Basic application of this paragraph (b)(3). (i) *Distribution of importation property in a loss importation transaction.* (A) *Facts.* USP owns the sole outstanding share of FC stock. FC owns three assets, A1 (basis $40, value $50), A2 (basis $120, value $30), and A3 (basis $140, value $20). On Date 1, FC distributes A1, A2, and A3 to USP in a complete liquidation that qualifies under section 332.

(B) *Importation property.* Under § 1.362–3(d)(2), the fact that any gain or loss recognized by a CFC may affect an income inclusion under section 951(a) does not alone cause gain or loss recognized by the CFC to be treated as taken into account in determining a Federal income tax liability for purposes of this section. Thus, if FC had sold either A1, A2, or A3 immediately before the transaction, no gain or loss recognized on the sale would have been taken into account in determining a Federal income tax liability. Further, if USP had sold A1, A2, or A3 immediately after the transaction, USP would take into account any gain or loss recognized on the sale in determining its Federal income tax liability. Therefore, A1, A2, and A3 are all importation properties. See paragraph (b)(3)(iii)(A) of this section and § 1.362–3(c)(2).

(C) *Loss importation transaction.* Immediately after the distribution, USP's aggregate basis in the importation properties, A1, A2, and A3, would, but for section 334(b)(1)(B) and this section, be $300 ($40 + $120 + $140) and the properties' aggregate value would be $100 ($50 + $30 + $20). Therefore, the importation properties' aggregate basis would exceed their aggregate value and the distribution is a loss importation transaction. See paragraph (b)(3)(iii)(A) of this section and § 1.362–3(c)(3).

(D) *Basis of importation property distributed in loss importation transaction.* Because the importation properties, A1, A2, and A3, were transferred in a loss importation transaction, the basis in each of the importation properties received is equal to its value immediately after FC distributes the property. Accordingly, USP's basis in A1 is $50; USP's basis in A2 is $30; and USP's basis in A3 is $20.

(ii) *Distribution of both importation and non-importation property in a loss importation transaction.* (A) *Facts.* The facts are the same as in paragraph (i)(A) of this *Example 1* except that FC is engaged in a U.S. trade or business and A3 is used in that U.S. trade or business.

(B) *Importation property.* A1 and A2 are importation properties for the reasons set forth in paragraph (i)(B) of this *Example 1.* However, if FC had sold A3 immediately before the transaction, FC would take into account any gain or loss recognized on the sale in determining its Federal income tax liability. Therefore, A3 is not importation property. See paragraph (b)(3)(iii)(A) of this section and § 1.362–3(c)(2).

(C) *Loss importation transaction.* Immediately after the distribution, USP's aggregate basis in the importation properties, A1 and A2, would, but for section 334(b)(1)(B) and this section, be $160 ($40 + $120). Further, the properties' aggregate value would be $80 ($50 + $30). Therefore, the importation properties' aggregate basis would exceed their aggregate value and the distribution is a loss importation transaction. See paragraph (b)(3)(iii)(A) of this section and § 1.362–3(c)(3).

(D) *Basis of importation property distributed in loss importation transaction.* Because the importation properties, A1 and A2, were transferred in a loss importation transaction, the basis in each of the importation properties received is equal to its value immediately after FC distributes the property. Accordingly, USP's basis in A1 is $50 and USP's basis in A2 is $30.

(E) *Basis of other property.* Because A3 is not importation property distributed in a loss importation transaction, USP's basis in A3 is determined under generally applicable basis rules. Accordingly, USP's basis in A3 is $140, the adjusted basis that FC had in the property immediately before the distribution. See section 334(b)(1).

(iii) *FC not wholly owned.* The facts are the same as in paragraph (i)(A) of this *Example 1* except that USP owns only 80% of the sole outstanding class of FC stock and the remaining 20% is owned by individual X. Further, on Date 1 and pursuant to the plan of liquidation, FC distributes A1 and A2 to USP and A3 to X. A1 and A2 are importation properties, the distribution to USP is a loss importation transaction, and USP's bases in A1 and A2 are equal to their value ($50 and $30, respectively) for the reasons set forth in paragraphs (ii)(C) and (ii)(D) of this *Example 1.* Under section 334(a), X's basis in A3 is $20.

(iv) *Importation property, no net built in loss.* (A) *Facts.* The facts are the same as in paragraph (i)(A) of this *Example 1* except that the value of A2 is $230.

(B) *Importation property.* A1, A2, and A3, are importation properties for the reasons set forth in (i)(B) of this *Example 1.*

(C) *Loss importation transaction.* Immediately after the distribution, USP's aggregate basis in the importation properties, A1, A2, and A3, would, but for section 334(b)(1)(B) and this section, be $300 ($40 + $120 + $140). However, the properties' aggregate value would also be $300 ($50 + $230 + $20). Therefore, the importation properties' aggregate basis would not exceed their aggregate value and the distribution is not a loss importation transaction. See paragraph (b)(3)(iii)(A) of this section and § 1.362–3(c)(3).

(D) *Basis of importation property not distributed in loss importation transaction.* Because the importation properties, A1, A2, and A3, were not distributed in a loss importation transaction, the basis of each of the importation properties is determined under the generally applicable basis rules. Accordingly, immediately after the distribution, USP's basis in A1 is $40, USP's basis in A2 is $120, and USP's basis in A3 is $140, the adjusted bases that FC had in the properties immediately before the distribution. See section 334(b)(1).

(v) *CFC stock as importation property distributed in loss importation transaction.* (A) *Facts.* USP owns the sole outstanding share of FC stock. FC owns the sole outstanding share of CFC1 stock (basis $80, value $100) and the sole outstanding share of CFC2 stock (basis $100, value $5). On Date 1, FC distributes its shares of CFC1 and CFC2 stock to USP in a complete liquidation that qualifies under section 332.

(B) *Importation property.* No special rule applies to the treatment of property that is the stock of a CFC. Thus, if FC had sold either the CFC1 share or the CFC2 share immediately before the transaction, no gain or loss recognized on the sale would have been taken into account in determining a Federal income tax liability. Further, if USP had sold either the CFC1 share or the CFC2 share immediately after the transaction, USP would take into account any gain or loss recognized on the sale in determining its Federal income tax liability. Thus, the CFC1 share and the CFC2 share are importation property. See paragraph (b)(3)(iii)(A) of this section and § 1.362–3(c)(2).

(C) *Loss importation transaction.* Immediately after the distribution, USP's aggregate basis in importation property (the CFC1 share and the CFC2 share) would, but for section 334(b)(1)(B) and this section, be $180 ($80 + $100) and the shares' aggregate value is $105 ($100 + $5). Therefore, the importation property's aggregate basis would exceed their aggregate value and the distribution is a loss importation transaction. See paragraph (b)(3)(iii)(A) of this section and § 1.362–3(c)(3).

(D) *Basis of importation property distributed in loss importation transaction.* Because the importation property (the CFC1 share and the CFC2 share) was transferred in a loss importation transaction, USP's basis in each of the shares received is equal to its value immediately after FC distributes the shares. Accordingly, USP's basis in the CFC1 share is $100 and USP's basis in the CFC2 share is $5.

Example 2. Multiple step liquidation. (i) *Facts.* USP owns the sole outstanding share of FC stock. On January 1 of year 1, FC adopts a plan of liquidation. FC makes the following distributions to USP in a transaction that qualifies as a complete liquidation under section 332. In year 1, FC distributes A1 and, immediately before the

distribution, FC's basis in A1 is $100 and A1's value is $120. In Year 2, FC distributes A2, and, immediately before the distribution, FC's basis in A2 is $100 and A2's value is $120. In year 3, in its final liquidating distribution, FC distributes A3 and, immediately before the distribution, FC's basis in A3 is $100 and A3's value is $120. As of the time of the final distribution, USP had depreciated the bases of A1 and A2 to $90 and $95, respectively; the value of A1 had appreciated to $160; and, the value of A2 has declined to $0.

(ii) *Importation property.* If FC had sold either A1, A2, or A3 immediately before it was distributed, no gain or loss recognized on the sale would have been taken into account in determining a Federal income tax liability. Further, if USP had sold either A1, A2, or A3 immediately after it was distributed, USP would take into account any gain or loss recognized on the sale in determining its Federal income tax liability. Therefore, A1, A2, and A3 are all importation properties. See paragraph (b)(3)(iii)(A) of this section and § 1.362–3(c)(2).

(iii) *Loss importation transaction.* Immediately after it was distributed, USP's basis in each of the importation properties, A1, A2, and A3, would, but for section 334(b)(1)(B) and this section, have been $100. Further, immediately after each such property was distributed, its value was $120. Thus, the properties' aggregate basis, $300, would not have exceeded the properties' aggregate value, $360. Accordingly, the distribution is not a loss importation transaction irrespective of the fact that, when the liquidation was completed, the properties' aggregate basis was $285 and the properties' aggregate value was $280. See paragraph (b)(3)(iii)(B) of this section and § 1.362–3(c)(3).

(iv) *Basis of importation property not distributed in loss importation transaction.* Because the importation properties, A1, A2, and A3, were not distributed in a loss importation transaction, the basis of each of the importation properties is determined under the generally applicable basis rules. Accordingly, USP takes each of the properties with a basis of $100 and, immediately after the final distribution, has an adjusted basis of $90 in A1 (USP's $100 basis less the $10 depreciation), $95 in A2 (USP's $100 basis less the $5 depreciation), and $100 in A3. See section 334(b).

(c) *Effective/applicability date.* This section applies to any taxable year beginning on or after these regulations are published as final regulations in the **Federal Register**, unless effected pursuant to a binding agreement that was in effect prior to that date and at all times thereafter. However, taxpayers may apply this section to transactions occurring after October 22, 2004.

■ **Par. 5.** Section 1.337–1 is added to read as follows:

§ 1.337–1 Nonrecognition for property distributed to parent in complete liquidation of subsidiary.

(a) *General rule.* If section 332(a) is applicable to the receipt of a subsidiary's property in complete liquidation, no gain or loss is recognized to the liquidating subsidiary with respect to such property (including property distributed with respect to indebtedness, see section 337(b)(1) and § 1.332–7), except as provided in section 337(b)(2) (distributions to certain tax-exempt distributees), section 367(e)(2) (distributions to foreign corporations), and section 897(d) (distributions of U.S. real property interests by foreign corporations).

(b) *Effective/applicability date.* This section applies to any taxable year beginning on or after these regulations are published as final regulations in the **Federal Register**.

■ **Par. 6.** Section 1.351–3 is amended by revising paragraphs (a)(3) and (b)(3), and adding a sentence at the end of paragraph (f) to read as follows:

§ 1.351–3 Records to be kept and information to be filed.

(a) * * *

(3) The fair market value and basis of the property transferred by such transferor in the exchange, determined immediately before the transfer and aggregated as follows:

(i) Importation property transferred in a loss importation transaction, as defined in § 1.362–3(c)(2) and § 1.362–3(c)(3), respectively;

(ii) Loss duplication property as defined in § 1.362–4(c)(1);

(iii) Property with respect to which any gain or loss was recognized on the transfer (without regard to whether such property is also identified in paragraph (a)(3)(i) or (ii) of this section); and

(iv) Property not described in paragraphs (a)(3)(i), (a)(3)(ii), or (a)(3)(iii) of this section.

* * * * *

(b) * * *

(3) The fair market value and basis of property received in the exchange, determined immediately before the transfer and aggregated as follows:

(i) Importation property transferred in a loss importation transaction, as defined in § 1.362–3(c)(2) and § 1.362–3(3), respectively;

(ii) Loss duplication property as defined in § 1.362–4(c)(1);

(iii) Property with respect to which any gain or loss was recognized on the transfer (without regard to whether such property is also identified in paragraph (b)(3)(ii) of this section);

(iv) Property not described in paragraphs (b)(3)(i), (b)(3)(ii), or (b)(3)(iii) of this section; and

* * * * *

(f) *Effective/applicability date.* * * * Paragraphs (a)(3) and (b)(3) of this section apply to any taxable year beginning on or after these regulations are published as final regulations in the **Federal Register**, unless effected pursuant to a binding agreement that was in effect prior to that date and at all times thereafter.

■ **Par. 7.** Section 1.358–6 is amended by revising paragraphs (c)(1)(i)(A), (c)(2)(ii)(B), (c)(3)(i), (c)(3)(ii), (c)(4), (e), (f)(1), and the first sentence of paragraph (f)(3), and adding new paragraph (f)(4) to read as follows:

§ 1.358–6 Stock basis in certain triangular reorganizations.

* * * * *

(c) * * *

(1) * * *

(i) * * *

(A) P acquired the T assets acquired by S in the reorganization (and P assumed any liabilities which S assumed or to which the T assets acquired by S were subject) directly from T in a transaction in which P's basis in the T assets was determined under section 362(b) (taking into account the provisions of section 362(e)(1)); and

* * * * *

(2) * * *

(ii) * * *

(B) Determine the basis in the T stock acquired as if P acquired such stock from the former T shareholders in a transaction in which P's basis in the T stock was determined under section 362(b) (taking into account the provisions of section 362(e)(1) and, to the extent the transfer is a transaction described in section 362(a), the provisions of section 362(e)(2)).

(3) * * *

(i) P acquired the T stock acquired by S in the reorganization directly from the T shareholders in a transaction in which P's basis in the T stock was determined under section 362(b) (taking into account the provisions of section 362(e)(1)); and

(ii) P transferred the T stock to S in a transaction in which P's basis in its S stock was determined under section 358 (taking into account the provisions of section 362(e)(2) to the extent the transfer is a transaction described in section 362(a)).

(4) *Examples.* The rules of this paragraph (c) are illustrated by the following examples. For purposes of these examples, P, S, and T are domestic corporations, the property transferred is not importation property within the meaning of § 1.362–3(c)(2) or loss duplication property within the meaning of § 1.362–4(c)(2), P and S do not file consolidated returns, P owns all of the shares of the only class of S stock, the P stock exchanged in the transaction

satisfies the requirements of the applicable triangular reorganization provisions, and the facts set forth the only corporate activity.

* * * * *

(e) *Cross-references*—(1) *Triangular reorganizations involving members of a consolidated group.* For rules relating to stock basis adjustments made as a result of a triangular reorganization in which P and S, or P and T, as applicable, are, or become, members of a consolidated group, see § 1.1502–30. However, if a transaction is a group structure change, stock basis adjustments are determined under § 1.1502–31 and not under § 1.1502–30, even if the transaction also qualifies as a reorganization otherwise subject to § 1.1502–30.

(2) *Transfers of importation property in loss importation transaction and transfers of loss duplication property.* For rules relating to stock basis adjustments made as a result of a triangular reorganization in which the property treated as acquired by P would be importation property received in a loss importation transaction, see § 1.362–3. For rules relating to adjustments made as a result of a triangular reorganization that also qualifies under section 362(a), see § 1.362–4.

(3) *Triangular reorganizations involving certain foreign corporations.* For rules relating to stock basis adjustments made as a result of triangular reorganizations involving certain foreign corporations, see §§ 1.367(b)–4(b), 1.367(b)–10, and 1.367(b)–13.

(f) * * * (1) *General rule.* In general, this section applies to triangular reorganizations occurring on or after December 23, 1994. However, paragraphs (c)(1)(i)(A), (c)(2)(ii)(B), (c)(3)(i), and (c)(3)(ii) of this section apply to triangular reorganizations occurring on or after the date these regulations are published as final regulations in the **Federal Register**.

* * * * *

(3) * * * Paragraphs (b)(2)(v) and (e)(1) of this section shall apply to triangular reorganizations occurring on or after September 17, 2008. * * *

(4) *Triangular reorganizations involving importation property acquired in loss importation transaction or loss duplication transaction; triangular reorganizations involving certain foreign corporations.* Paragraphs (e)(2) and (e)(3) of this section shall apply to triangular reorganizations occurring on or after the date these regulations are published as final regulations in the **Federal Register**.

■ **Par. 8.** Section 1.362–3 is added to read as follows:

§ 1.362–3 Basis of importation property acquired in loss importation transaction.

(a) *Purpose.* The purpose of section 362(e)(1) and this section is to prevent a corporation (Acquiring) from importing a net built-in loss in a transaction described in either section 362(a) (section 351 transfers, contributions to capital, or paid-in surplus) or section 362(b) (reorganizations). See paragraph (c) of this section for definitions of terms used in this section.

(b) *Basis determinations under this section*—(1) *Basis of importation property received in loss importation transaction.* Notwithstanding any other provision of law, Acquiring's basis in importation property (as defined in paragraph (c)(2) of this section) acquired in a loss importation transaction (as defined in paragraph (c)(3) of this section) is equal to the value of the property immediately after the transaction.

(2) *Adjustment to basis of subsidiary stock in triangular reorganizations.* If a corporation (P) computes its basis in stock of a subsidiary (whether S or T) under § 1.358–6 (stock basis in certain triangular reorganizations), P's basis in property treated as acquired by P in § 1.358–6(c) is determined under section 362(e)(1) and this section to the extent such property, if actually acquired by P, would be importation property acquired in a loss importation transaction. See § 1.358–6(c)(1)(i)(A), paragraphs (c)(2)(ii)(B), and (c)(3)(i). The subsidiary's basis in the property actually acquired in the transaction is determined under applicable law (including this section), without regard to the amount of any adjustment to P's basis in the subsidiary's stock. Thus, the basis of the property in S's or T's hands may differ from the amount of the adjustment to P's basis in its stock of S or T.

(3) *Acquiring's basis in other property transferred.* In general, Acquiring's basis in property received in a section 362 transaction (as defined in paragraph (c)(1) of this section) that is not determined under section 362(e)(1) and this section is determined under section 362(a) or section 362(b). However, if the transaction is described in section 362(a) (without regard to whether it is also described in any other section), further adjustment may be required under section 362(e)(2). See § 1.362–4.

(c) *Definitions.* For purposes of this section, the following definitions apply:

(1) *Section 362 transaction.* The term *section 362 transaction* means any transaction described in section 362(a) or in section 362(b).

(2) *Importation property.*—(i) *General rule.* The term *importation property* means any property (including separate portions of property tentatively divided under paragraph (e)(2) of this section) with respect to which—

(A) Any gain or loss that would be recognized on its sale by the transferor immediately before the transaction (the transferor's hypothetical sale) would not be subject to tax imposed under any provision of subtitle A of the Internal Revenue Code (Federal income tax) (taking into account the provisions of paragraph (d) of this section); and

(B) Any gain or loss that would be recognized on its sale by Acquiring immediately after the transaction (Acquiring's hypothetical sale) would be subject to Federal income tax (taking into account the provisions of paragraph (d) of this section)

(ii) *Special rules for applying this paragraph (c)(2).* See paragraph (d) of this section for rules for determining whether gain or loss on a hypothetical sale would be taken into account in determining a Federal income tax liability and paragraph (e) of this section for rules applicable when more than one person would take such gain or loss into account.

(3) *Loss importation transaction.* The term *loss importation transaction* means any section 362 transaction in which Acquiring's aggregate basis in all importation property received from all transferors in the transaction would exceed the aggregate value of such property immediately after the transaction. For this purpose, Acquiring's basis in property received is determined without regard to this section or section 362(e)(2).

(4) *Value*—(i) *General rule.* The term *value* means fair market value.

(ii) *Special rule for transfers of partnership interests.* Notwithstanding the general rule in paragraph (c)(4)(i) of this section, when referring to a partnership interest, for purposes of this section, the term *value* means the sum of the cash that Acquiring would receive for the interest, assuming an exchange between a willing buyer and a willing seller (neither being under any compulsion to buy or sell and both having reasonable knowledge of relevant facts), increased by any § 1.752–1 liabilities (as defined in § 1.752–1(a)(4)) of the partnership allocated to Acquiring with regard to such transferred interest under section 752 immediately after the transfer to Acquiring. See § 1.743–1 regarding the application of section 743(b) following a section 362(e) basis reduction.

(d) *Rules for determining whether gain or loss would be taken into account in determining a Federal income tax liability*—(1) *General rule.* In general, any gain or loss that would be recognized on a hypothetical sale described in either paragraph (c)(2)(i) or paragraph (c)(2)(ii) of this section is considered to be subject to Federal income tax if, taking into account all relevant facts and circumstances, such gain or loss would affect or be taken into account in determining the Federal income tax liability of the transferor or Acquiring, respectively. This determination is made without regard to whether such person has or would have any actual Federal income tax liability for the taxable year of the transaction.

(2) *Look-through rule in the case of certain pass-through entities.* Notwithstanding the general rule in paragraph (d)(1) of this section, the determination of whether any gain or loss on a hypothetical sale would be treated as subject to Federal income tax is made by reference to the person that would be required to include such gain or loss in its taxable income if the hypothetical seller is—

(i) A trust treated as owned by its grantors or others (see section 671);

(ii) A partnership (see section 701); or

(iii) An S corporation (see sections 1363 and 1366).

(3) *Controlled foreign corporations (CFC), passive foreign investment companies (PFIC).* For purposes of this section, gain or loss that would be recognized by a CFC (as defined in section 957(a)) or a PFIC (as defined in section 1297(a)) is not deemed taken into account in determining a Federal income tax liability solely because it could affect an inclusion under section 951(a) or section 1293(a).

(4) *Look-through treatment in the case of certain avoidance transactions.* (i) *Application of section.* This paragraph (d)(4) applies if—

(A) The transferor is a domestic entity that is a trust, estate, regulated investment company (RIC) (as defined in section 851(a)), a real estate investment trust (REIT) (as defined in section 856(a)), or a cooperative (see section 1381); and

(B) The transferor transfers, directly or indirectly, property that was transferred to or acquired by it as part of a plan (whether of transferor, Acquiring, or any other person) to avoid the application of section 362(e)(1) and this section to a section 362 transaction.

(ii) *Effect of application of section.* Notwithstanding paragraph (d)(1) of this section, if a transferor is described in both paragraphs (d)(4)(ii)(A) and (d)(4)(ii)(B) of this section—

(A) The transferor is treated as though it distributes the proceeds of the hypothetical sale (which, for this purpose, are presumed to be an amount greater than zero);

(B) To the fullest extent possible under the transferor's organizing instrument, taking into account the beneficiaries or owners of interests (as applicable) in the transferor, the deemed distribution is treated as made to a distributee or distributees that would not take distributions from the transferor into account in determining a Federal income tax liability; and

(C) The determination of whether the gain or loss on the hypothetical sale is treated as subject to Federal income tax is made by reference to the deemed distributee or distributees.

(iii) *Tiered entities.* If a deemed distributee is an entity described in paragraph (d)(4)(i)(A) of this section, the determination of whether gain or loss on the hypothetical sale is taken into account in determining a Federal income tax liability is made by treating the deemed distributee, and any successive such deemed distributees, as a transferor and applying the rules in paragraphs (d)(4)(i) and (d)(4)(ii) of this section to its deemed distribution (and to all successive deemed distributions), until no deemed distributee or successive deemed distributee is an entity described in paragraph (d)(4)(i)(A) of this section.

(e) *Special rules for gain or loss that would be taken into account by multiple persons*—(1) *In general.* If gain or loss from a disposition of property would be includible in income by more than one person, the property is treated as tentatively divided into separate portions in proportion to the amount of gain or loss recognized with respect to the property that would be allocated to each such person. If an entity's organizing instrument specially allocates gain and loss, the tentative division of property under this paragraph (e) must reflect the manner in which gain or loss on the disposition of such property would be allocated under the terms of the organizing instrument, taking into account the net gain or loss actually recognized by the entity in that tax year.

(2) *Application of section.* The rules of this section apply independently to each tentatively divided portion to determine if the portion is importation property. Each tentatively divided portion that is determined to be importation property is included with all other importation property in the determination of whether the transaction is a loss importation transaction.

(3) *Acquiring's basis in property tentatively divided into separate portions.* Immediately after the application of section 362(e)(1) and this section and before the application of section 362(e)(2), each property treated as tentatively divided into separate portions for purposes of applying section 362(e)(1) and this section ceases to be treated as tentatively divided and Acquiring has a single, undivided basis in such property that is equal to the sum of—

(i) The value of each tentatively divided portion that is importation property, if the transaction is a loss importation transaction; and

(ii) Acquiring's basis in each tentatively divided portion that is not importation property received in a loss importation transaction, as determined under section 362(a) or section 362(b), as applicable, and without regard to any potential application of section 362(e)(2).

(f) *Examples.* The examples in this paragraph (f) illustrate the application of section 362(e)(1) and the provisions of this section. Unless otherwise indicated, the examples use the following nomenclature and assumptions: A and B are U.S. citizens. DC, DC1, and P are domestic corporations that have not elected to be S corporations within the meaning of section 1361(a)(1) and that are not members of a consolidated group. F is a foreign individual. FP is a foreign partnership. FC, FC1, and FC2 are foreign corporations. Unless the facts indicate otherwise, the foreign individuals, corporations, and partnerships are not engaged in a U.S. trade or business, have no U.S. real property interests, and have no other relationships, activities, or interests that would cause them, their shareholders, their partners, or their property to be subject to Federal income taxation. There is no applicable income tax treaty, and all persons and transactions are unrelated unless the facts indicate otherwise.

Example 1. Basic application of section. (i) *Section 351 transfer of importation property in a loss importation transaction.* (A) *Facts.* FC owns three assets, A1 (basis $40, value $150), A2 (basis $120, value $30), and A3 (basis $140, value $20). On Date 1, FC transfers A1, A2, and A3 to DC in a transaction to which section 351 applies.

(B) *Importation property.* If FC had sold A1, A2, or A3 immediately before the transaction, no gain or loss recognized on the sale would have been taken into account in determining a Federal income tax liability. Further, if DC had sold A1, A2, or A3 immediately after the transaction, DC would take into account any gain or loss recognized on the sale in determining its Federal income tax liability. Therefore, A1, A2, and A3 are

all importation properties. See paragraph (c)(2) of this section.

(C) *Loss importation transaction.* FC's transfer of A1, A2, and A3 is a section 362 transaction. Furthermore, but for section 362(e)(1) and this section and section 362(e)(2), DC's aggregate basis in the importation properties, A1, A2, and A3, would be $300 ($40 + $120 + $140) under section 362(a) and the properties' aggregate value would be $200 ($150 + $30 + $20). Therefore, the importation properties' aggregate basis would exceed their aggregate value and the transaction is a loss importation transaction. See paragraph (c)(3) of this section.

(D) *Application of section 362(e)(1) and this section to importation property received in loss importation transaction.* Because the importation properties, A1, A2, and A3, were transferred in a loss importation transaction, paragraph (b)(1) of this section applies and DC's basis in A1, A2, and A3 will each be equal to the property's value ($150, $30, and $20, respectively) immediately after the transfer.

(E) *Basis of property received in transaction.* Following the application of section 362(e)(1) and this section, the provisions of section 362(e)(2) must be taken into account because the transfer is a section 362(a) transaction. Taking into account the application of section 362(e)(1) and this section, DC's aggregate basis in the transferred properties would not exceed their aggregate value immediately after the transfer. Therefore, FC does not have a net built-in loss, FC's transfer is not a loss duplication transaction, and section 362(e)(2) does not apply to this transaction. DC's bases in A1, A2, and A3, as determined under paragraph (i)(D) of this *Example 1,* are $150, $30, and $20, respectively. Under section 358(a), FC receives the DC stock with a basis of $300 (the sum of FC's bases in A1, A2, and A3 immediately before the exchange).

(ii) *Reorganization.* The facts are the same as in paragraph (i)(A) of this *Example 1* except that, instead of transferring property to DC in a section 351 exchange, FC merges with and into DC in a transaction described in section 368(a)(1)(A). The analysis and results are the same as set forth in paragraphs (i)(B), (i)(C), (i)(D), and (i)(E) of this *Example 1,* except that, under section 358(a), FC's shareholders will take the DC stock with a basis determined by reference to their FC stock basis.

(iii) *FC's property used in U.S. trade or business.* (A) *Facts.* The facts are the same as in paragraph (i)(A) of this *Example 1,* except that FC is engaged in a U.S. trade or business and uses all the properties in that U.S. trade or business. In this case, none of the properties would be importation property because FC would take any gain or loss on the disposition of the properties into account in determining its Federal income tax liability. Accordingly, this section does not apply to the transaction.

(B) *Basis of property received in transaction.* Following the application of section 362(e)(1) and this section, the provisions of section 362(e)(2) must be taken into account because the transfer is a section 362(a) transaction. Taking into account the application of section 362(e)(1) and this section but without taking into account the provisions of section 362(e)(2), DC's aggregate basis in the transferred properties would be $300 ($40 + $120 + $140) under section 362(a) and the properties' aggregate value immediately after the transfer would be $200 ($150 + $30 + $20). Therefore, FC has a net built-in loss and FC's transfer of A1, A2, and A3 is a loss duplication transaction. Accordingly, under the general rule of section 362(e)(2), FC's $100 net built-in loss ($300 aggregate basis over $200 aggregate value) would be allocated proportionately (by the amount of built-in loss in each property) to reduce DC's basis in the loss properties, A2 and A3. See § 1.362–4. As a result, DC's basis in A2 would be $77.14 ($120 basis under section 362(a) reduced by $42.86, A2's proportionate share of FC's net built-in loss, computed as $90/$210 × $100) and DC's basis in A3 would be $82.86 ($140 basis under section 362(a) reduced by $57.14, A3's proportionate share of FC's net built-in loss, computed as $120/$210 × $100). However, if FC and DC were to elect under section 362(e)(2)(C) to apply the $100 basis reduction to FC's basis in the DC stock received in the transaction, DC's bases in A2 and A3 would remain their section 362(a) bases of $120 and $140, respectively. Under section 362(a), DC's basis in A1 is $40 (irrespective of whether the section 362(e)(2)(C) election is made). If FC and DC do not make a section 362(e)(2)(C) election, FC's basis in the DC stock received in the exchange will be $300; if FC and DC do make the election, FC's basis in the DC stock will be $200 ($300–$100 net built-in loss). See § 1.362–4(b).

Example 2. Multiple transferors. (i) *Facts.* The facts are the same as in paragraph (i)(A) of *Example 1,* except that FC only owns A1 (basis $40, value $150) and A2 (basis $120, value $30) and F owns A3 (basis $140, value $20). On Date 1, FC transfers A1 and A2, and F transfers A3, to DC in a single transaction described in section 351.

(ii) *Importation property.* A1 and A2 are importation properties for the reasons set forth in paragraph (i)(B) of *Example 1.* A3 is also an importation property because, if F had sold A3 immediately before the transaction, no gain or loss recognized on the sale would have been taken into account in determining a Federal income tax liability, and, further, if DC had sold A3 immediately after the transaction, DC would take into account any gain or loss recognized on the sale in determining its Federal income tax liability.

(iii) *Loss importation transaction.* The transfers by FC and F are a section 362 transaction. The transaction is a loss importation transaction for the reasons set forth in paragraph (i)(C) of *Example 1* (notwithstanding that one of the transferors, FC, did not transfer a net built-in loss). See paragraph (c)(3) of this section.

(iv) *Application of section 362(e)(1) and this section to importation property received in loss importation transaction.* Because the importation properties, A1, A2, and A3, were transferred in a loss importation transaction, paragraph (b)(1) of this section applies and DC's basis in A1, A2, and A3 will each be equal to the property's value ($150, $30, and $20, respectively) immediately after the transfer.

(v) *Basis of property received in transaction.* Following the application of section 362(e)(1) and this section, the provisions of section 362(e)(2) must be taken into account because the transfer is a section 362(a) transaction. The application of section 362(e)(2) is determined separately for each transferor. See § 1.362–4(b). Taking into account the application of section 362(e)(1) and this section, neither DC's aggregate basis in FC's properties nor DC's basis in F's property would exceed the properties' respective values immediately after the transaction. Therefore neither FC nor F has a net built-in loss, neither transfer is a loss duplication transaction, and section 362(e)(2) does not apply to either transfer. DC's bases in A1, A2, and A3, as determined under paragraph (iv) of this *Example 2,* are $150, $30, and $20, respectively. Under section 358(a), FC's basis in the DC stock received is $160 ($40 + $120) and F's basis in the DC stock received in the exchange is $140.

Example 3. Transfer of importation and non-importation property. (i) *Facts.* As in paragraph (i) of *Example 2,* FC owns A1 (basis $40, value $150) and A2 (basis $120, value $30), and F owns A3 (basis $140, value $20). In addition, A2 is a U.S. real property interest as defined in section 897(c)(1). On Date 1, FC transfers A1 and A2, and F transfers A3, to DC in a single transaction described in section 351.

(ii) *Importation property.* A1 and A3 are importation properties for the reasons set forth in paragraph (i)(B) of *Example 1* and paragraph (i) of *Example 2,* respectively. However, A2 is not importation property because, if FC had sold A2 immediately before the transaction, FC would take into account any gain or loss recognized on the sale in determining its Federal income tax liability.

(iii) *Loss importation transaction.* FC's transfer is a section 362 transaction. Furthermore, but for section 362(e)(1) and this section and section 362(e)(2), DC's aggregate basis in the importation properties, A1 and A3, would be $180 ($40 + $140) and the properties' aggregate value would be $170 ($150 + $20) immediately after the transaction. Therefore, the importation properties' aggregate basis would exceed their aggregate value immediately after the transaction, and the transfer is a loss importation transaction.

(iv) *Application of section 362(e)(1) and this section to importation property received in loss importation transaction.* Because the importation properties, A1 and A3, were transferred in a loss importation transaction, paragraph (b)(1) of this section applies and DC's basis in A1 and in A3 will each be equal to the property's value ($150 and $20, respectively) immediately after the transfer.

(v) *Basis of property received in transaction.* Following the application of section 362(e)(1) and this section, the provisions of section 362(e)(2) must be taken into account because the transfer is a section 362(a) transaction. The application of section 362(e)(2) is determined separately for each transferor. See § 1.362–4(b).

(A) *FC's transfer.* Taking into account the application of section 362(e)(1) and this

section but without taking into account the provisions of section 362(e)(2), DC would have an aggregate basis of $270 in the transferred properties ($150 in A1, as determined under paragraph (iv) of this *Example 3,* plus $120 in A2, determined under section 362(a)), and the properties would have an aggregate value of $180 ($150 + $30) immediately after the transfer. Therefore, FC has a net built-in loss and FC's transfer of A1 and A2 is a loss duplication transaction. Accordingly, under the general rule of section 362(e)(2), FC's $90 net built-in loss ($270 aggregate basis to DC over $180 aggregate value) would be allocated proportionately to reduce DC's basis in the loss property transferred by FC. As a result, FC's entire net built-in loss would be allocated to A2, the only loss property transferred by FC, and DC's basis in A2 would be $30 ($120 basis under section 362(a) reduced by $90 net built-in loss). However, if FC and DC were to elect under section 362(e)(2)(C) to apply the $90 basis reduction to FC's basis in the DC stock received in the transaction, DC's basis in A2 would remain its section 362(a) basis of $120. DC's basis in A1 is $150 as determined under paragraph (iv) of this *Example 3* (irrespective of whether the section 362(e)(2)(C) election is made). If FC and DC do not make a section 362(e)(2)(C) election, FC's basis in the DC stock received in the exchange will be $270; if FC and DC do make the election, FC's basis in the DC stock will be $180 ($270–$90 net built-in loss). See § 1.362–4.

(B) *F's transfer of A3.* Taking into account the application of section 362(e)(1) and this section, DC's basis in A3, the property transferred by F, would not exceed its value immediately after the transfer. Therefore, F does not have a built-in loss, F's transfer is not a loss duplication transaction, and section 362(e)(2) does not apply to F's transfer. DC's basis in A3, as determined under paragraph (iv) of this *Example 3,* is $20. Under section 358(a), F receives the DC stock with a basis of $140.

Example 4. Multiple transferors of non-importation properties. (i) *Facts.* DC1 owns A1 (basis $40, value $150). In addition, as in *Example 3,* FC owns A2 (basis $120, value $30), a U.S. real property interest as defined in section 897(c)(1), and F owns A3 (basis $140, value $20). On Date 1, DC1 transfers A1, FC transfers A2, and F transfers A3, to DC in a single transaction described in section 351.

(ii) *Importation property.* A2 is not importation property and A3 is importation property for the reasons set forth in paragraph (ii) of *Example 3* and paragraph (i)(B) of *Example 1,* respectively. A1 is not importation property because, if DC1 had sold A2 immediately before the transaction, DC1 would take into account any gain or loss recognized on the sale in determining its Federal income tax liability.

(iii) *Loss importation transaction.* The transfer of A1, A2, and A3 is a section 362 transaction. Furthermore, but for section 362(e)(1) and this section and section 362(e)(2), DC's basis in importation property, A3, would be $140 and the value of the property would be $20 immediately after the transaction. Therefore, the importation property's basis would exceed value and the transfer is a loss importation transaction.

(iv) *Application of section 362(e)(1) and this section to importation property received in loss importation transaction.* Because the importation property, A3, was transferred in a loss importation transaction, section 362(e)(1) and paragraph (b)(1) of this section applies and DC's basis in A3 will be equal to A3's $20 value immediately after the transfer.

(v) *Basis of property received in transaction.* Following the application of section 362(e)(1) and this section, the provisions of section 362(e)(2) must be taken into account because the transfer is a section 362(a) transaction. The application of section 362(e)(2) is determined separately for each transferor. See § 1.362–4.

(A) *DC1's transfer.* Taking into account the application of section 362(e)(1) and this section, DC's basis in A1 ($40 under section 362(a)) would not exceed its value immediately after the transfer. Therefore, DC1 does not have a net built-in loss, DC1's transfer is not a loss duplication transaction, and section 362(e)(2) does not apply to DC1's transfer. DC's basis in A1, determined under section 362(a), is $40. Under section 358(a), DC1 receives the DC stock with a basis of $40.

(B) *FC's transfer.* Taking into account the application of section 362(e)(1) and this section, but without taking into account the provisions of section 362(e)(2), DC would have a section 362(a) basis of $120 in A2, which would exceed A2's $30 value immediately after the transfer. Therefore, FC has a net built-in loss and FC's transfer of A2 is a loss duplication transaction. Accordingly, under the general rule of section 362(e)(2), FC's $90 net built-in loss (DC's $120 basis in A2 over A2's $30 value) would be applied to reduce DC's basis in A2, the only loss property transferred by FC. As a result, DC's basis in A2 would be $30 ($120 basis under section 362(a), reduced by the $90 net built-in loss). However, if FC and DC were to elect under section 362(e)(2)(C) to apply the $90 basis reduction to FC's basis in the DC stock received in the transaction, DC's basis in A2 would be its $120 basis determined under section 362(a). If FC and DC do not make a section 362(e)(2)(C) election, FC's basis in the DC stock received in the exchange will be $120; if FC and DC do make the election, FC's basis in the DC stock will be $30 ($120–$90). See § 1.362–4.

(C) *F's transfer.* F's transfer of A3 is a transaction described in section 362(a). However, taking into account the application of section 362(e)(1) and this section, DC's basis in A3 ($20) would not exceed its value immediately after the transfer. Therefore, F does not have a built-in loss, F's transfer is not a loss duplication transaction, and section 362(e)(2) does not apply to F's transfer. DC's basis in A3, as determined under paragraph (iv) of this *Example 4,* is $20. Under section 358(a), FC receives the DC stock with a basis of $140.

Example 5. Partnership transactions. (i) *Transfer by foreign partnership, foreign and domestic partners.* (A) *Facts.* A and F are equal partners in FP. FP owns A1 (basis $100, value $70). Under the terms of the FP partnership agreement, FP's items of income, gain, deduction, and loss are allocated equally between A and F. FP transfers A1 to DC in a transfer to which section 351 applies. No election is made under section 362(e)(2)(C).

(B) *Importation property.* If FP had sold A1 immediately before the transaction, any gain or loss recognized on the sale would be allocated to and includible by A and F equally under the partnership agreement. Thus, A1 is treated as tentatively divided into two equal portions, one treated as owned by A and one treated as owned by F. If FP had sold A1 immediately before the transaction, any gain or loss recognized on the portion treated as owned by A would have been taken into account in determining a Federal income tax liability (A's); thus A's tentatively divided portion of A1 is not importation property. However, no gain or loss recognized on the tentatively divided portion treated as owned by F would have been taken into account in determining a Federal income tax liability. Further, if DC had sold A1 immediately after the transaction, any gain or loss recognized on the sale would have been taken into account in determining a Federal income tax liability (DC's); thus, F's tentatively divided portion of A1 is importation property.

(C) *Loss importation transaction.* FP's transfer of A1 is a section 362 transaction. Furthermore, but for section 362(e)(1) and this section and section 362(e)(2), DC's basis in the importation property, F's portion of A1, would be $50 under section 362(a) and the property's value would be $35 immediately after the transaction. Therefore, the importation property's basis would exceed its value and the transfer is a loss importation transaction.

(D) *Application of section 362(e)(1) and this section to importation property received in loss importation transaction.* Because the importation property, F's tentatively divided portion of A1, was transferred in a loss importation transaction, section 362(e)(1) and paragraph (b)(1) of this section applies and DC's basis in F's portion of A1 will be equal to its $35 value.

(E) *Basis of property received in transaction.* Following the application of section 362(e)(1) and this section, the provisions of section 362(e)(2) must be taken into account because the transfer is a section 362(a) transaction. Taking into account the application of section 362(e)(1) and this section but without taking into account the provisions of section 362(e)(2), DC's aggregate basis in A1 would be $85 (the sum of the $35 basis in F's tentatively divided portion of A1, as determined under paragraph (i)(D) of this *Example 5,* and the $50 basis in A's tentatively divided portion of A1, determined under section 362(a), see paragraph (d)(2) of this section) and A1's value immediately after the transfer would be $70. Therefore, FP has a net built-in loss and FP's transfer of A1 is a loss duplication transaction. Accordingly, under the general rule of section 362(e)(2), FP's $15 net built-in loss ($85 basis over $70 value) would be allocated to reduce DC's basis in the loss asset, A1, the only loss property transferred by FP. As a result, DC's basis in A1 would

be $70 ($85 basis under section 362(a) and this section, reduced by the $15 net built-in loss). Under section 358, FP's basis in the DC stock received in the exchange will be $100. See § 1.362–4.

(ii) *Transfer with election to apply section 362(e)(2)(C).* The facts are the same as in paragraph (i)(A) of this *Example 5,* except that FP and DC elect to apply section 362(e)(2)(C) to reduce FP's basis in the DC stock received in the exchange. The analysis and results are the same as in paragraphs (i)(B), (i)(C), (i)(D), and (i)(E) of this *Example 5,* except that the $15 reduction to DC's basis in A1 is not made and, as a result, DC's basis in A1 remains $85, and FP's basis in the DC stock received in the exchange is reduced from $100 to $85. The $15 reduction to FP's basis in DC stock reduces A's basis in its FP interest under section 705(a)(2)(B). See § 1.362–4(f)(1).

(iii) *Transfer by domestic partnership.* The facts are the same as in paragraph (i)(A) of this *Example 5* except that FP is a domestic partnership. The analysis and results are the same as in paragraphs (i)(B), (i)(C), (i)(D), and (i)(E) of this *Example 5.*

(iv) *Transfer of interest in partnership with liability.* (A) *Facts.* F and two other individuals are equal partners in FP. F's basis in its partnership interest is $247. F's share of FP's § 1.752–1 liabilities (as defined in § 1.752–1(a)(4)) is $150. F transfers his partnership interest to DC in a transaction to which section 351 applies. FP has no section 754 election in effect. If DC were to sell the FP interest immediately after the transfer, DC would receive $100 in cash or other property. In addition, taking into account the rules under § 1.752–4, DC's share of FP's § 1.152–1 liabilities (as defined in § 1.752–1(a)(4)) is $145 immediately after the transfer.

(B) *Importation property.* If F had sold his partnership interest immediately before the transaction, no gain or loss recognized on the sale would have been taken into account in determining a Federal income tax liability. Further, if DC had sold the partnership interest immediately after the transaction, any gain or loss recognized on the sale would have been taken into account in determining a Federal income tax liability. Therefore, F's partnership interest is importation property.

(C) *Loss importation transaction.* F's transfer is a section 362 transaction. However, but for section 362(e)(1) and this section and section 362(e)(2), DC's basis in the importation property, the partnership interest, determined under section 362(a) and taking into account the rules under section 752, would be $242 (F's $247 basis reduced by F's $150 share of PRS liabilities and increased by DC's $145 share of PRS liabilities) and, under § 1.362–4(c)(12)(ii), the value of the PRS interest would be $245 (the sum of $100, the cash DC would receive if DC immediately sold the partnership interest, and $145, DC's share of the § 1.752–1 liabilities (as defined in § 1.752–1(a)(4)) under section 752 immediately after the transfer to DC). Therefore, the importation property's basis ($242) would not exceed its value ($245), and the transfer is not a loss importation transaction.

(D) *Basis in property received in transaction.* Following the application of section 362(e)(1) and this section, the provisions of section 362(e)(2) must be taken into account because the transfer is a section 362(a) transaction. As described in paragraph (iv)(C) of this *Example 5,* taking into account the application of section 362(e)(1) and this section, DC's basis in the partnership interest would not exceed its value. Therefore, under § 1.362–4, F does not have a net built-in loss, the transfer is not a loss duplication transaction, and section 362(e)(2) does not apply to the transfer. DC's basis in F's partnership interest is $242, determined under sections 362(a) and 752. Under section 358, taking into account the rules under section 752, F's basis in the DC stock received in the exchange is $97 ($247 reduced by F's $150 share of FP liabilities).

Example 6. Transactions involving tax-exempt entities. (i) *Exempt transferor.* (A) *Facts.* InsCo is a benevolent life insurance association of a purely local character exempt from Federal income tax under section 501(a) because it is described in section 501(c)(12). InsCo owns shares of stock of DC1 (basis $100, value $70) for investment purposes, which are not debt-financed property (as defined in section 514). On December 31, Year 1, InsCo transfers the DC1 stock to DC in a transaction to which section 351 applies. No election is made under section 362(e)(2)(C).

(B) *Importation property.* If InsCo had sold the DC1 stock immediately before the transaction, any gain or loss realized would be excluded from unrelated business taxable income (UBTI) under section 512(b)(5), and thus no gain or loss recognized on the sale would have been taken into account in determining Federal income tax liability. Further, if DC had sold the DC1 stock immediately after the transaction, any gain or loss recognized on the sale would have been taken into account in determining Federal income tax liability. Therefore, the DC1 stock is importation property.

(C) *Loss importation transaction.* InsCo's transfer is a section 362 transaction. Furthermore, but for section 362(e)(1) and this section and section 362(e)(2), DC's basis in importation property, the DC1 stock, would be $100, and the stock's value would be $70 immediately after the transaction. Therefore, the importation property's basis would exceed its value and the transfer is a loss importation transaction.

(D) *Application of section 362(e)(1) and this section to importation property received in loss importation transaction.* Because the importation property, the DC1 stock, was transferred in a loss importation transaction, paragraph (b)(1) of this section applies and DC's basis in the stock will be equal to its $70 value.

(E) *Basis of property received in transaction.* Following the application of section 362(e)(1) and this section, the provisions of section 362(e)(2) must be taken into account because the transfer is a section 362(a) transaction. Taking into account the application of section 362(e)(1) and this section, DC's basis in the DC1 stock would not exceed its value immediately after the transaction. Therefore, InsCo does not have a net built-in loss, InsCo's transfer is not a loss duplication transaction, and section 362(e)(2) has no application to the transaction. DC's basis in the DC1 stock, as determined under paragraph (i)(D) of this *Example 6,* is $70. Under section 358, InsCo's basis in the DC stock received in the exchange will be $100.

(ii) *Transferor loses tax-exempt status.* (A) *Facts.* The facts are the same as in paragraph (i)(A) of this *Example 6* except that InsCo fails to be described in section 501(c)(12) in Year 1.

(B) *Importation property.* If InsCo had sold the DC1 stock immediately before the transaction, any gain or loss recognized on the sale would have been taken into account in determining a Federal income tax liability. Therefore, the DC1 stock is not importation property and this section does not apply to the transaction.

(C) *Basis of property received in transaction.* Following the application of section 362(e)(1) and this section, the provisions of section 362(e)(2) must be taken into account because the transfer is a section 362(a) transaction. Taking into account the application of section 362(e)(1) and this section but without taking into account the provisions of section 362(e)(2), DC would have a section 362(a) basis of $100 in the stock, which would exceed its value of $70 immediately after the transfer. Therefore, InsCo has a net built-in loss and InsCo's transfer of the DC1 stock is a loss duplication transaction. Accordingly, under the general rule of section 362(e)(2), InsCo's $30 net built-in loss ($100 basis over $70 value) would be allocated to reduce DC's basis in the loss asset, the DC1 stock, the only loss property transferred by InsCo. As a result, DC's basis in the DC1 stock would be $70 ($100 basis under section 362(a), reduced by the $30 net built-in loss). Under section 358, InsCo's basis in the DC stock received in the exchange will be $100.

(iii) *Transfer of property that is subject to unrelated business tax.* (A) *Facts.* The facts are the same as in paragraph (i)(A) of this *Example 6* except that, on December 31, Year 1, instead of the DC1 stock, InsCo transfers A1 (basis $200, value $150) to DC. A1 is an office building that InsCo owned from January 1 to December 31 of Year 1. During the entirety of this period, A1 constitutes debt-financed property (as defined in section 514). Pursuant to sections 512 and 514, InsCo would be required to include in UBTI a portion of the gains or losses from a sale of A1 at the end of Year 1. DC does not take the property subject to the debt.

(B) *Importation property.* If InsCo had sold A1 immediately before the transaction, the gain or loss recognized on the sale would have been taken into account in determining a Federal income tax liability, even though at a lesser rate of inclusion. Therefore, A1 is not importation property and this section does not apply to the transaction.

(C) *Basis of property received in transaction.* The analysis and results are the same as in paragraph (ii)(C) of this *Example 6.*

Example 7. Transactions involving CFCs. (i) *Transfer by CFC.* (A) *Facts.* FC is a CFC with 100 shares of stock outstanding. A owns 60 of the shares and F owns the remaining 40 shares. FC owns two assets, A1 (basis $70, value $100), which is used in the conduct of

a U.S. trade or business, and A2 (basis $100, value $75), which is not used in the conduct of a U.S. trade or business. FC transfers both assets to DC in a transaction to which section 351 applies.

(B) *Importation property.* If FC had sold A1 immediately before the transaction, any gain or loss recognized on the sale would have been taken into account in determining a Federal income tax liability (FC's). See section 882(a). Therefore, A1 is not importation property. If FC had sold A2 immediately before the transaction, FC would not take the gain or loss recognized into account in determining its Federal income tax liability, but the gain or loss could be taken into account in determining a section 951 inclusion to FC's U.S. shareholders. However, under paragraph (d)(3) of this section, gain or loss is not deemed taken into account in determining a Federal income tax liability solely because it could affect an inclusion under section 951(a). Further, if DC had sold A2 immediately after the transaction, any gain or loss recognized on the sale would have been taken into account in determining a Federal income tax liability. Therefore, A2 is importation property.

(C) *Loss importation transaction.* FC's transfer is a section 362 transaction. Furthermore, but for section 362(e)(1) and this section and section 362(e)(2), DC's basis in the importation property, A2, would be $100 and the property's value would be $75 immediately after the transaction. Therefore, the importation property's basis would exceed its value and the transfer is a loss importation transaction.

(D) *Application of section 362(e)(1) and this section to importation property received in loss importation transaction.* Because the importation property, A2, was transferred in a loss importation transaction, paragraph (b)(1) of this section applies and DC's basis in A2 will be equal to A2's $75 value immediately after the transfer.

(E) *Basis of property received in transaction.* Following the application of section 362(e)(1) and this section, the provisions of section 362(e)(2) must be taken into account because the transfer is a section 362(a) transaction. Taking into account the application of section 362(e)(1) and this section but without taking into account the provisions of section 362(e)(2), DC would have an aggregate basis of $145 in the transferred properties ($70 in A1, determined under section 362(a), plus $75 in A2, determined under this section) and the properties would have an aggregate value of $175 ($100 + $75) immediately after the transfer. Therefore, FC does not have a net built-in loss, FC's transfer is not a loss duplication transaction, and section 362(e)(2) does not apply to the transaction. DC's basis in A1 will be $70, determined under section 362(a), and DC's basis in A2 will be $75, as determined under paragraph (i)(D) of this *Example 7.* Under the general rule in section 358(a), FC receives the DC stock with a basis of $170 ($70 attributable to A1 plus $100 attributable to A2).

(ii) *Transfer of CFC stock.* (A) *Facts.* The facts are the same as in paragraph (i)(A) of this *Example 7,* except that A transfers its 60 shares of FC stock (basis $80, value $105) and F transfers its 40 shares of FC stock (basis $100, value $70) to DC in an exchange that qualifies under section 351.

(B) *Importation property.* If A had sold its FC shares immediately before the transaction, any gain or loss recognized on the sale would have been taken into account in determining a Federal income tax liability (A's). Therefore, A's FC shares are not importation property. However, if F had sold its FC shares immediately before the transaction, no gain or loss recognized on the sale would have been taken into account in determining a Federal income tax liability. Further, if DC had sold F's FC shares immediately after the transaction, any gain or loss recognized on the sale would have been taken into account in determining a Federal income tax liability. Therefore, F's FC shares are importation property.

(C) *Loss importation transaction.* The transfer of the FC shares is a section 362 transaction. Furthermore, but for section 362(e)(1) and this section and section 362(e)(2), DC's aggregate basis in the importation property, F's shares of FC stock, would be $100 under section 362(a) and the shares' aggregate value would be $70. Therefore, the importation property's aggregate basis would exceed its aggregate value, and the transfer is a loss importation transaction.

(D) *Application of section 362(e)(1) and this section to importation property received in loss importation transaction.* Because the importation property, F's shares of FC stock, was transferred in a loss importation transaction, paragraph (b)(1) of this section applies and DC's aggregate basis in the shares will be equal to their $70 aggregate value immediately after the transfer.

(E) *Basis of property received in transaction.* Following the application of section 362(e)(1) and this section, the provisions of section 362(e)(2) must be taken into account because the transfer is a section 362(a) transaction. The application of section 362(e)(2) is determined separately for each transferor. See § 1.362–4(b).

(*1*) *A's transfer.* Taking into account the application of section 362(e)(1) and this section, DC's aggregate basis in the shares ($80 under section 362(a)) would not exceed the shares' value ($105) immediately after the transaction. Therefore A does not have a built-in loss, A's transfer is not a loss duplication transaction, and section 362(e)(2) does not apply to A's transfer. DC's aggregate basis in A's shares, determined under section 362(a), is $80. Under section 358(a), A receives the DC stock with a basis of $80.

(*2*) *F's transfer.* Taking into account the application of section 362(e)(1) and this section, DC's aggregate basis in the shares would not exceed their value immediately after the transaction. Therefore, F does not have a built-in loss, F's transfer is not a loss duplication transaction, and section 362(e)(2) does not apply to F's transfer. DC's aggregate basis in F's shares, as determined under paragraph (ii)(D) of this *Example 7,* is $70. Under section 358(a), F receives the DC stock with a basis of $100.

Example 8. Property subject to withholding tax. (i) *Facts.* FC owns a share of DC1 stock (basis $100, value $70) as an investment. FC receives dividends on the share that are subject to Federal withholding tax of 30 percent of the amount received under section 881(a); under section 1442(a), DC1 must withhold tax on the dividends paid. FC transfers the DC1 share to DC in a transaction to which section 351 applies.

(ii) *Importation property.* Although any dividends received with respect to the DC1 stock were subject to withholding tax, if FC had sold the share of stock of DC1, no gain or loss recognized on the sale would have been taken into account in determining a Federal income tax liability. See section 865(a)(2). Further, if DC had sold the share of DC1 stock immediately after the transaction, any gain or loss recognized on the sale would be taken into account in determining Federal income tax liability. Therefore, the share of DC1 stock is importation property.

(iii) *Loss importation transaction.* FC's transfer is a section 362 transaction. Furthermore, but for section 362(e)(1) and this section and section 362(e)(2), DC's basis in the importation property, the share of DC1 stock, would be $100 and the share's value would be $70 immediately after the transaction. Therefore, the share's basis would exceed its value and the transfer is a loss importation transaction.

(iv) *Application of section 362(e)(1) and this section to importation property received in loss importation transaction.* Because the importation property, the DC1 share, was transferred in a loss importation transaction, paragraph (b)(1) of this section applies and DC's basis in the share will be equal to the share's $70 value.

(v) *Basis of property received in transaction.* Following the application of section 362(e)(1) and this section, the provisions of section 362(e)(2) must be taken into account because the transfer is a section 362(a) transaction. Taking into account the application of section 362(e)(1) and this section, DC's basis in the DC1 share would not exceed the share's value immediately after the transaction. Therefore, FC does not have a net built-in loss, FC's transfer is not a loss duplication transaction, and section 362(e)(2) does not apply to the transaction. DC's basis in the DC1 share, as determined under paragraph (iv) of this *Example 8,* is $70. Under section 358, FC's basis in the DC stock received in the exchange will be $100.

Example 9. Property transferred in triangular reorganization. (i) *Foreign subsidiary.* (A) *Facts.* P owns the sole outstanding share of stock of FC (basis $1), FC1 owns the sole outstanding share of FC2 (basis $100), and FC2 owns one asset, A1 (basis $100, value $20). In a forward triangular merger described in § 1.358–6(b)(2)(i), FC2 merges with and into FC, and FC1 receives shares of P stock in exchange for its FC2 stock. The forward triangular merger is a transaction described in section 368(a)(2)(D) and, therefore, in section 362(b).

(B) *Determining P's basis in its FC share.* Pursuant to § 1.358–6, for purposes of determining the adjustment to P's basis in its FC shares, P is treated as though it first received A1 in a transaction in which its basis in A1 would be determined under

section 362(b) and then it transferred A1 to FC in a transaction in which P's basis in its FC stock would be determined under section 358.

(*1*) *P's deemed acquisition and transfer of A1.* If FC2 had sold A1 for its value immediately before the deemed transaction, no gain or loss recognized on the sale would have been taken into account in determining a Federal income tax liability. If P had sold A1 immediately after the deemed transaction, any gain or loss recognized on the sale would have been taken into account in determining a Federal income tax liability (P's). Therefore, with respect to P's deemed acquisition, A1 is importation property. Furthermore, immediately after the deemed transaction, P's basis in A1, but for section 362(e)(1) and this section and section 362(e)(2), would be $100 and A1's value is $20. Therefore, the importation property's basis would exceed its value and the transfer is a loss importation transaction. Accordingly, P's deemed basis in A1 will be equal to A1's $20 value.

(*2*) *P's FC stock basis.* As a result of P's deemed transfer of A1 to FC (and applying the principles of § 1.367(b)–13), P's basis in its FC stock is increased by its $20 deemed basis in A1. Accordingly, following the transaction, P's basis in its share of FC stock will be $21 (the sum of its original $1 basis and the $20 adjustment for the deemed transfer of A1).

(C) *FC's basis in A1.* FC's basis in A1 is determined under the rules of this section without regard to the determination of P's adjustment to its basis in FC stock. If FC2 had sold A1 for its value immediately before the transaction, no gain or loss recognized on the sale would have been taken into account in determining a Federal income tax liability. However, if FC had sold A1 immediately after the transaction, no gain or loss recognized on the sale would have been taken into account in determining a Federal income tax liability, so A1 is not importation property. Accordingly, this section will not apply to the transaction. Although there is a net built-in loss in A1, the transaction is not described in section 362(a), and so section 362(e)(2) and § 1.362–4 will not apply to the transaction. Thus, under section 362(b), FC's basis in A1 will be $100.

(D) *FC1's basis in P stock.* Under section 358, FC1's basis in the P stock it receives in the exchange will be $100.

(ii) *Property transferred to U.S. subsidiary in triangular reorganization.* (A) *Facts.* The facts are the same as in paragraph (i)(A) of this *Example 9,* except that P also owns the sole outstanding share of DC (basis $1) and, instead of merging into FC, FC2 merged into DC.

(B) *Determining P's basis in its DC share.* As determined under paragraph (i)(B)(*2*) of this *Example 9,* P's basis in its DC share is $21, the sum of its original $1 basis plus the $20 adjustment for the deemed transfer of A1.

(C) *DC's basis in A1.* If FC2 had sold A1 for its value immediately before the transaction, no gain or loss recognized on the sale would have been taken into account in determining a Federal income tax liability. However, if DC had sold A1 immediately after the transaction, any gain or loss recognized on the sale would have been taken into account in determining a Federal income tax liability, so A1 is importation property with respect to DC. Furthermore, immediately after the transaction, DC's basis in A1, but for section 362(e)(1) and this section and section 362(e)(2), would be $100 and A1's value is $20. Therefore, the importation property's basis would exceed its value and the transfer is a loss importation transaction. Accordingly, DC's basis in A1 will be $20, A1's value immediately after the transaction.

(D) *FC1's basis in P stock.* Under section 358, FC1's basis in the P stock it receives in the exchange is $100.

(g) *Effective/applicability date.* This section applies to any transaction occurring on or after the date these regulations are published as final regulations in the **Federal Register**, unless effected pursuant to a binding agreement that was in effect prior to that date and at all times thereafter. However, taxpayers may apply this section to transactions occurring after October 22, 2004.

■ **Par. 9.** Section 1.362–4 is amended by:

■ 1. Revising the introductory text in paragraph (h).

■ 2. Revising paragraph (h) *Example 11.*

■ 3. Adding a new sentence to the end of paragraph (j).

The revisions and addition read as follows:

§ 1.362–4 Basis of loss duplication.

* * * * *

(h) * * * The examples in this paragraph (h) illustrate the application of section 362(e)(2) and the provisions of this section. Unless the facts otherwise indicate, the examples use the following nomenclature and assumptions: X, Y, P, S, S1, and S2 are domestic corporations; A and B are U.S. individuals; FC1 and FC2 are foreign corporations and are not engaged in a U.S. trade or business, have no U.S. real property interests, and have no other relationships, activities, or interests that would cause them, their shareholders, or their property to be subject to Federal income taxation; there is no applicable income tax treaty; PRS is a domestic partnership; no election is made under section 362(e)(2)(C); and the transferred property is not importation property (as defined in § 1.362–3(c)(2)) and the transfers are not loss importation transactions (as defined in § 1.362–3(c)(3)), so that the basis of no property is determined under section 362(e)(1). All persons and transactions are unrelated unless the facts indicate otherwise, and all other relevant facts are set forth in the examples. See § 1.362–3(f) for additional examples illustrating the application of section 362(e)(2) and this section, including to transactions that are subject to section 362(e)(2), and section 362(e)(1).

* * * * *

Example 11. Transfers of importation property with non-importation property. (*i*) *Single transferor, loss importation transaction.* (A) *Facts.* FC1 transfers Asset 1 (basis $80, value $50) and Asset 2 (basis $120, value $110) to DC in a transaction to which section 351 applies. Asset 1 is not importation property within the meaning of § 1.362–3(c)(2). Asset 2 is importation property within the meaning of § 1.362–3(c)(2).

(B) *Application of section 362(e)(1).* Immediately after the transfer, and without regard to section 362(e)(1) or section 362(e)(2) and this section, DC's aggregate basis in importation property (Asset 2) would be $120. The aggregate value of the importation property immediately after the transfer is $110. Accordingly, the transaction is a loss importation transaction within the meaning of § 1.362–3(c)(3) and, under section 362(e)(1), DC's basis in Asset 2 would equal its value, $110.

(C) *Application of section 362(e)(2) and this section.* (*1*) *Analysis.* (*i*) *Loss duplication transaction.* FC1's transfer of Asset 1 and Asset 2 is a transaction described in section 362(a). But for section 362(e)(2) and this section, DC's aggregate basis in those assets would be $190 ($80 under section 362(a) + $110 under section 362(e)(1)), which would exceed the aggregate value of the assets $160 ($50 + $110) immediately after the transaction. Accordingly, the transfer is a loss duplication transaction and FC1 has a net built-in loss of $30 ($190—$160).

(*ii*) *Identifying loss duplication property.* But for section 362(e)(2) and this section, DC's basis in Asset 1 would be $80, which would exceed Asset 1's $50 value immediately after the transaction. Accordingly, Asset 1 is loss duplication property. But for section 362(e)(2) and this section, DC's basis in Asset 2 would be $110, which would not exceed Asset 2's $110 value immediately after the transaction. Accordingly, Asset 2 is not loss duplication property.

(C) *Basis in loss duplication property.* DC's basis in Asset 1 is $50, computed as its $80 basis under section 362(a) reduced by FC1's $30 net built-in loss.

(D) *Basis in other property.* Under section 362(e)(1), DC's basis in Asset 2 is $110. Under section 358(a), FC1 has an exchanged basis of $200 in the DC stock it receives in the transaction.

(ii) *Multiple transferors, no importation of loss.* (A) *Facts.* The facts are the same as paragraph (i)(A) of this *Example 11,* except that, in addition, FC2 transfers Asset 3 (basis $100, value $150) to DC as part of the same transaction. Asset 3 is importation property within the meaning of § 1.362–3(c)(2).

(B) *Application of section 362(e)(1).* Immediately after the transfer, and without regard to section 362(e)(1) or section 362(e)(2) and this section, DC's aggregate basis in importation property (Asset 2 and Asset 3) would be $220 ($120 + $100). The aggregate value of the importation property immediately after the transfer is $260 ($110

+ $150). Accordingly, the transaction is not a loss importation transaction within the meaning of § 1.362–3(c)(3) and DC's bases in the importation property is not determined under section 362(e)(1).

(C) *Application of section 362(e)(2) and this section: FC1.* Notwithstanding that the transfers by FC1 and FC2 are pursuant to a single plan forming one transaction, section 362(e)(2) and this section apply to each transferor separately.

(*1*) *Analysis.* (*i*) *Loss duplication transaction.* FC1's transfer of Asset 1 and Asset 2 is a transaction described in section 362(a). But for section 362(e)(2) and this section, DC's aggregate basis in those assets would be $200 ($80 + $120), which would exceed the aggregate value of the assets $160 ($50 + $110) immediately after the transaction. Accordingly, the transfer is a loss duplication transaction and FC1 has a net built-in loss of $40 ($200—$160).

(*ii*) *Identifying loss duplication property.* But for section 362(e)(2) and this section, DC's basis in Asset 1 would be $80, which would exceed Asset 1's $50 value immediately after the transaction. Accordingly, Asset 1 is loss duplication property. But for section 362(e)(2) and this section, DC's basis in Asset 2 would be $120, which would exceed Asset 2's $110 value immediately after the transaction. Accordingly, Asset 2 is also loss duplication property.

(*2*) *Basis in loss duplication property.* DC's basis in Asset 1 is $50, computed as its $80 basis under section 362(a) reduced by $30, its allocable portion of FC1's $40 net built-in loss ($80/$200 × $40). DC's basis in Asset 2 is $110, computed as its $120 basis under section 362(a) reduced by $10, its allocable portion of FC1's $40 net built-in loss ($120/$200 × $40).

(*3*) *Basis in other property.* Under section 358(a), FC1 has an exchanged basis of $200 in the DC stock it receives in the transaction.

(D) *Application of section: FC2.* FC2's transfer of Asset 3 is not a loss duplication transaction because Asset 3's value exceeds its basis immediately after the transaction. Accordingly, under section 362(a), DC's basis in Asset 3 is $100.

* * * * *

(j) * * * The introductory text and *Example 11* of paragraph (h) of this section apply to transactions on or after the date these regulations are published as final regulations in the **Federal Register** unless effected pursuant to a binding agreement that was in effect prior to that date and at all times thereafter; however, taxpayers may apply such provisions to transactions occurring after October 22, 2004.

■ **Par. 10.** Section 1.368–3 is amended by revising paragraphs (a)(3), (b)(3) and adding a sentence to the end of paragraph (e) to read as follows:

§ 1.368–3 Records to be kept and information to be filed with returns.

(a) * * *

(3) The value and basis of the assets, stock or securities of the target corporation transferred in the transaction, determined immediately before the transfer and aggregated as follows—

(i) Importation property transferred in a loss importation transaction, as defined in §§ 1.362–3(c)(2) and 1.362–3(c)(3), respectively;

(ii) Loss duplication property as defined in § 1.362–4(c)(1);

(iii) Property with respect to which any gain or loss was recognized on the transfer (without regard to whether such property is also identified in paragraph (a)(3)(i) or (a)(3)(ii) of this section);

(iv) Property not described in paragraphs (a)(3)(i), (a)(3)(ii) or (a)(3)(iii) of this section; and

* * * * *

(b) * * *

(3) The value and basis of all the stock or securities of the target corporation held by the significant holder that is transferred in the transaction and such holder's basis in that stock or securities, determined immediately before the transfer and aggregated as follows—

(i) Stock and securities with respect to which an election is made under section 362(e)(2)(C); and

(ii) Stock and securities not described in paragraph (b)(3)(i) of this section.

* * * * *

(e) *Effective/applicability date.* * * * Paragraphs (a)(3) and (b)(3) of this section apply to any taxable year beginning on or after these regulations are published as final regulations in the **Federal Register**, unless effected pursuant to a binding agreement that was in effect prior to that date and at all times thereafter.

Beth Tucker,

Deputy Commissioner for Operations Support.

[FR Doc. 2013–21662 Filed 9–6–13; 8:45 am]

BILLING CODE 4830–01–P

DEPARTMENT OF THE TREASURY

Internal Revenue Service

26 CFR Parts 1 and 301

[REG–132455–11]

RIN 1545–BL31

Information Reporting of Minimum Essential Coverage

AGENCY: Internal Revenue Service (IRS), Treasury.

ACTION: Notice of proposed rulemaking and notice of public hearing.

SUMMARY: This document contains proposed regulations providing guidance to providers of minimum essential health coverage that are subject to the information reporting requirements of section 6055 of the Internal Revenue Code (Code), enacted by the Affordable Care Act. Health insurance issuers, certain employers, and others that provide minimum essential coverage to individuals must report to the IRS information about the type and period of coverage and furnish related statements to covered individuals. These proposed regulations affect health insurance issuers, employers, governments, and other persons that provide minimum essential coverage to individuals.

DATES: Written or electronic comments must be received by November 8, 2013. Requests to speak and outlines of topics to be discussed at the public hearing scheduled for November 19, 2013, at 10 a.m., must be received by November 8, 2013.

ADDRESSES: Send submissions to: CC:PA:LPD:PR (REG–132455–11), Room 5203, Internal Revenue Service, P.O. Box 7604, Ben Franklin Station, Washington, DC 20044. Submissions may be hand-delivered Monday through Friday between the hours of 8 a.m. and 4 p.m. to CC:PA:LPD:PR (REG–132455–11), Courier's Desk, Internal Revenue Service, 1111 Constitution Avenue NW., Washington, DC, or sent electronically via the Federal eRulemaking Portal at *http://www.regulations.gov* (IRS REG–132455–11).

FOR FURTHER INFORMATION CONTACT: Concerning the proposed regulations, Andrew Braden, (202) 622–4960; concerning the submission of comments and/or to be placed on the building access list to attend the public hearing, Oluwafunmilayo (Funmi) Taylor, (202) 622–7180 (not toll-free calls).

SUPPLEMENTARY INFORMATION:

Paperwork Reduction Act

The collection of information contained in this notice of proposed rulemaking has been submitted to the Office of Management and Budget in accordance with the Paperwork Reduction Act of 1995 (44 U.S.C. 3507(d)). Comments on the collection of information should be sent to the Office of Management and Budget, Attn: Desk Officer for the Department of the Treasury, Office of Information and Regulatory Affairs, Washington, DC 20503, with copies to the Internal Revenue Service, Attn: IRS Reports Clearance Officer, SE:W:CAR:MP:T:T:SP, Washington, DC 20224. Comments on the collection of information should be received by

November 8, 2013. Comments are specifically requested concerning:

Whether the proposed collection of information is necessary for the proper performance of the functions of the IRS, including whether the information will have practical utility;

How the quality, utility, and clarity of the information to be collected may be enhanced;

How the burden of complying with the proposed collection of information may be minimized, including through the application of automated collection techniques or other forms of information technology; and

Estimates of capital or start-up costs and costs of operation, maintenance, and purchase of services to provide information.

The collection of information in these proposed regulations is in §§ 1.6055–1 and 1.6055–2. The collection of information will be used to determine whether an individual has minimum essential coverage under section 1501(b) of the Patient Protection and Affordable Care Act (26 U.S.C. 5000A(f)). The collection of information is required to comply with the provisions of section 6055 of the Code. The likely respondents are health insurers, self-insured employers or other sponsors of self-insured health plans, and governments that provide minimum essential coverage.

The burden for the collection of information contained in these proposed regulations will be reflected in the burden on Form 1095–B or another form that the IRS designates, which will request the information in the proposed regulation.

An agency may not conduct or sponsor, and a person is not required to respond to, a collection of information unless it displays a valid control number assigned by the Office of Management and Budget.

Background

Beginning in 2014, under the Patient Protection and Affordable Care Act, Public Law 111–148 (124 Stat. 119 (2010)), and the Health Care and Education Reconciliation Act of 2010, Public Law 111–152 (124 Stat. 1029 (2010)) (collectively, the Affordable Care Act), nonexempt individuals have the choice of maintaining minimum essential coverage (as defined in section 5000A(f)) or paying an individual shared responsibility payment with their income tax returns. Minimum essential coverage may be health insurance coverage offered in the individual market (such as a qualified health plan offered through an Affordable Insurance Exchange (Exchange, also known as a Marketplace)), an employer-sponsored plan, or a government-sponsored program. Section 5000A(f)(1)(A) specifies that Medicare Part A, Medicaid, the Children's Health Insurance Program established under title XXI of the Social Security Act (42 U.S.C. 1397aa et seq.) (CHIP), TRICARE, certain health care programs for veterans and other individuals under chapter 17 or 18 of Title 38 U.S.C., coverage for Peace Corps volunteers under 22 USC 2504(e), and coverage under the Nonappropriated Fund Health Benefits Program under section 349 of Public Law 103–337, are government-sponsored programs that qualify as minimum essential coverage.

Section 1401 of the Affordable Care Act enacted section 36B, allowing certain taxpayers a refundable premium tax credit that will make minimum essential coverage in qualified health plans offered in the individual market through an Exchange more affordable.

Section 1502 of the Affordable Care Act enacted section 6055 regarding information reporting by any person that provides minimum essential coverage to an individual. Section 6055(b)(1)(B) requires providers of minimum essential coverage to report (1) the name, address, and taxpayer identification number (TIN) of the primary insured, (2) the name, dates of coverage, and TIN of each individual covered under a policy, (3) whether health insurance coverage is a qualified health plan offered through an Exchange, (4) for a qualified health plan, the amount of any advance payments of the premium tax credit under section 1412 of the Affordable Care Act and cost-sharing reductions under section 1402 of the Affordable Care Act, and (5) other information the Secretary requires.

Section 6055(b)(2) requires, for coverage through an employer's group health plan, reporting (1) the name, address, and employer identification number (EIN) of the employer maintaining the plan, (2) the portion of the premium (if any) paid by the employer, and (3) any other information that the Secretary requires for administering the credit under section 45R (the tax credit for employee health insurance expenses of small employers).

Section 6055(c) directs a person filing an information return under section 6055 to provide a written statement to each individual listed on the return that shows the name, address, and contact phone number of the reporting entity and information reported to the IRS for that individual. The statement must be furnished to the individual by January 31 of the year following the coverage year.

The information reported under section 6055 will allow taxpayers to establish and the IRS to verify that the taxpayers were covered by minimum essential coverage and their months of enrollment during a calendar year.

Under section 6724(d), as amended by the Affordable Care Act, a reporting entity that fails to comply with the filing and statement furnishing requirements of section 6055 may be subject to penalties for failure to file a correct information return (section 6721) and failure to furnish correct payee statements (section 6722). However, these penalties may be waived if the failure was due to reasonable cause and not to willful neglect (section 6724(a)).

Section 1514 of the Affordable Care Act enacted section 6056, which requires applicable large employers (generally employers with 50 or more full-time employees) to report to the IRS information about the coverage that they offer to their full-time employees and requires them to furnish related statements to employees.

Notice 2012–32 (2012–20 IRB 910) requested public comments on issues to be addressed in regulations under section 6055. In addition, Notice 2012–33 (2012–20 IRB 912) requested public comments on issues to be addressed in regulations under section 6056. As described later in this preamble, the written comments in response to Notice 2012–32 and other written comments have been considered in connection with the development of these proposed regulations.

As discussed in Notice 2013–45 (2013–31 IRB 116), Treasury and the IRS have engaged in dialogue with stakeholders in an effort to simplify section 6055 (and section 6056) reporting consistent with effective implementation of the law. This process has included discussions with stakeholders representing a wide range of interests to assist in the consideration of effective information reporting rules that will be as streamlined, simple, and workable as possible. The effort to develop these proposed information reporting rules has reflected a considered balancing of the importance of (1) providing individuals the information to complete their tax returns accurately, including with respect to the individual responsibility provisions and eligibility for the premium tax credit, (2) minimizing cost and administrative tasks for the reporting entities and individuals, and (3) providing the IRS with information needed for effective and efficient tax administration. As noted elsewhere in

this preamble, the proposed regulations will be the subject of public comments, including comments that are specifically invited regarding particular issues identified in the preamble.

Notice 2013–45 provides as transition relief that section 6055 information reporting will be optional for 2014. The IRS will not impose penalties for failure to timely and accurately report under section 6055 for coverage in 2014. As stated in Notice 2013–45, the IRS encourages voluntary section 6055 reporting for coverage in 2014.

Explanation of Provisions and Summary of Comments

1. Persons Subject to Information Reporting Requirement

a. Plans in the individual market

Under section 36B(f)(3) and § 1.36B–5, an Exchange must report information relating to enrollment in qualified health plans in the individual market to the IRS and taxpayers. This information includes the period coverage was in effect, the names and TINs of each individual covered, the amount of advance credit payments relating to the coverage, and the amount of premiums for the coverage. This reporting facilitates compliance with and administration of the premium tax credit under section 36B. A commenter suggested that issuers of qualified health plans should not be required to report under section 6055 regarding minimum essential coverage that they provide in the individual market through the Exchange because the Exchange reporting provides the IRS and taxpayers with the necessary information about this coverage.

In response to this comment and to reduce the burden associated with reporting under section 6055, the proposed regulations provide that issuers are not required to submit section 6055 information returns for coverage under a qualified health plan in the individual market enrolled in through an Exchange. For individuals enrolled in this coverage, the IRS and individuals will receive information necessary to administer or comply with the individual shared responsibility provision through information reporting by Exchanges under section 36B(f)(3). Issuers must report, however, on qualified health plans in the small group market enrolled in through the Small Business Health Options Program (SHOP), because annual information reporting by Exchanges under section 36B(f)(3) does not include these plans.

b. Employer-sponsored Insured Group Health Plans

Commenters recommended that the proposed regulations require employers rather than health insurance issuers to report under section 6055 for insured coverage under an employer-sponsored group health plan. The commenters suggested that employers have more direct access to information required to be reported for an employee enrolled in a group health plan.

Because section 6055(a) requires reporting by the entities providing the coverage, which for insured coverage is the issuer, the proposed regulations provide that health insurance issuers are responsible for reporting under section 6055 for all insured coverage, except coverage under certain government-sponsored programs (such as Medicaid and Medicare) that provide coverage through a health insurance issuer and coverage under qualified health plans in the individual market enrolled in through an Exchange.

Reporting entities are permitted to use third parties to facilitate filing returns and furnishing statements to comply with reporting requirements, including those under section 6055. These arrangements do not, however, transfer the potential liability for failure of the reporting entity to report and furnish under the regulations.

A party preparing returns or statements required under section 6055 that is a tax return preparer will be subject to the requirements that generally apply to return preparers.

c. Self-insured Group Health Plans

The proposed regulations provide that sponsors of self-insured health coverage are responsible for reporting under section 6055. The proposed regulations identify the employer as the plan sponsor and reporting entity for a self-insured group health plan established or maintained by a single employer. This rule is consistent with section 3(16)(B)(i) of the Employee Retirement Income Security Act of 1974 (ERISA), which states that the term ''plan sponsor'' means the employer in the case of an employee benefit plan established or maintained by a single employer.

Commenters noted that individuals may be covered under a self-insured arrangement that is a multiemployer plan and offered suggestions for identifying the entity responsible for reporting. Some commenters stated that employers that participate in a multiemployer plan do not have access to the information required to be reported under section 6055 and that the multiemployer plan or its administrator, for example, the joint board of trustees, should report for the participating employers. Another commenter suggested that labor unions report for multiemployer plans. Other commenters asserted that a plan's administrator or trustees generally are in the best position to report minimum essential coverage funded under a collective bargaining agreement unless the plan is funded by a single employer. A commenter asserted that each participating employer should be responsible for reporting under section 6055 for a multiple employer welfare arrangement (MEWA) under section 3(40) of ERISA (29 U.S.C. 1002(40)).

In response to these comments, the proposed regulations identify the sponsor and reporting entity for various types of self-insured arrangements (for example, the joint board of trustees for a multiemployer plan). For these purposes, the section 414 employer aggregation rules do not apply. Accordingly, a self-insured group health plan or arrangement covering employees of related corporations is treated as sponsored by more than one employer and each employer must report for its employees. However, one member of the group may assist the other members by filing returns and furnishing statements on behalf of all members.

Section 6055(d) provides that an appropriately designated person may report under section 6055 on behalf of a government employer. Accordingly, the proposed regulations allow a government employer providing self-insured coverage for its employees to report under section 6055 on its own behalf or to designate as the reporting entity another governmental unit or agency or instrumentality of a governmental unit that is part of or related to the same governmental unit as the government employer. If the designation is made before the filing deadline and the designee accepts it, the designated governmental unit, agency, or instrumentality is the sponsor responsible for section 6055 reporting. Comments are requested on issues specific to government employer plans and arrangements.

As noted, section 6056 requires applicable large employers to report information about the coverage that they offer to their full-time employees and to furnish related statements to employees. Commenters suggested that applicable large employers with self-insured health plans that must report under both sections 6055 and 6056 should be allowed to combine that reporting.

The general rules described in the proposed regulations assume separate

reporting, but include other rules that reduce duplicative reporting and otherwise simplify reporting. For example, the proposed regulations allow the use of substitute forms and statements to individuals, which may permit self-insured health plans to furnish a single substitute statement to covered individuals for both sections 6055 and 6056.

In addition, the preamble to proposed regulations under section 6056 advises that the IRS and the Treasury Department are considering permitting applicable large employers with self-insured plans that provide mandatory, minimum value coverage to employees, and offer that coverage to spouses and dependents, all with no employee contribution, to forgo providing section 6056 statements to those covered employees. Because the section 6055 return would provide the individual taxpayers information to accurately file the taxpayers' income tax returns, and would provide the IRS the information concerning those employees to administer the premium tax credit and employer shared responsibility provisions, Treasury and the IRS are considering whether for those employees the employer could file and furnish only the return required under section 6055 and include a code on the employees' Forms W–2.

Comments are requested on other ways to simplify and combine reporting.

d. Foreign Employers That Provide Minimum Essential Coverage

Section 6055(b)(2)(A) requires that reporting for coverage under a group health plan include the employer's EIN. A commenter noted that a foreign employer may provide minimum essential coverage but may not have an EIN. Comments are requested on rules for reporting by foreign employers without EINs that sponsor self-insured plans and on any other issues specific to reporting coverage provided by foreign employers.

e. Government-Sponsored Programs

The proposed regulations provide that the executive department or agency of a governmental unit that provides coverage under a government-sponsored program (within the meaning of section 5000A(f)(1)(A)) is responsible for reporting under section 6055. For example, the Department of Defense is responsible for reporting coverage under the TRICARE program. The proposed regulations identify the State agency that administers the Medicaid or CHIP program, rather than the Department of Health and Human Services, as the reporting entity for these programs. Additionally, under the proposed regulations, the responsible government department or agency, and not the issuer, is the reporting entity for coverage under a government-sponsored program provided through a health insurance issuer (such as some Medicaid, CHIP, and Medicare programs). Comments are requested on issues specific to reporting coverage under government-sponsored programs.

f. Other Arrangements Designated as Minimum Essential Coverage

Section 5000A(f)(1)(E) provides that the Secretary of Health and Human Services (HHS), in coordination with the Secretary of the Treasury, may recognize other health benefits coverage as minimum essential coverage. On July 1, 2013, HHS published final regulations designating certain coverage as minimum essential coverage and outlining substantive and procedural requirements that other types of coverage must fulfill to be recognized as minimum essential coverage. Patient Protection and Affordable Care Act: Exchange Functions: Eligibility for Exemptions; Miscellaneous Minimum Essential Coverage Provisions, 78 FR 39494 (HHS MEC regulations). These regulations designate as minimum essential coverage (1) self-funded student health coverage for plan or policy years beginning on or before December 31, 2014, (2) Refugee Medical Assistance supported by the Administration for Children and Families, (3) Medicare Advantage plans, and (4) State high risk pools for plan or policy years beginning on or before December 31, 2014.

The proposed rule that designates the government department or agency as the reporting entity for coverage under a government-sponsored program provided through a health insurance issuer applies to Medicare Advantage plans. Comments are requested on appropriate rules for identifying the reporting entity for other arrangements recognized as minimum essential coverage under section 5000A(f)(1)(E).

2. Information Required To Be Reported

a. In General

The proposed regulations provide that the section 6055 information return must include the name of each individual enrolled in minimum essential coverage and the name and address of the primary insured or other related person (for example, a parent or spouse) who submits the application for coverage (the responsible individual). The proposed regulations use the term *responsible individual* rather than the term *primary insured* because minimum essential coverage may not be insured coverage (for example, health coverage provided by the Department of Veterans Affairs). The return also must report the TIN and months of coverage for each individual who is covered under the policy or program and other information specified in forms, instructions, or published guidance, see §§ 601.601(d) and 601.602. For employer-provided coverage, the proposed regulations require reporting the name, address, and EIN of the employer maintaining the plan and whether coverage was enrolled in through the SHOP.

As part of the effort to minimize the cost and administrative steps associated with the reporting requirements, the proposed regulations do not require reporting information that would not be needed by individual taxpayers or the IRS for purposes of administering the individual shared responsibility provisions or the credit for small employers. Accordingly, the proposed regulations do not require reporting the portion of the premium paid by an employer, which the IRS does not need to determine if an individual is covered by minimum essential coverage. The proposed regulations require reporting the months of coverage rather than the specific dates of coverage, because minimum essential coverage applies month by month. The proposed regulations do not require reporting the amount of any cost-sharing reductions, which are not administered by the IRS. Finally, the proposed regulations do not require reporting the amount of advance payments or on coverage in a qualified health plan in the individual market enrolled in through an Exchange, since in both cases this information is reported to the IRS and provided to individuals by the Exchanges under section 36B(f)(3).

b. Identifying Information

Health insurance issuers and employers with self-funded plans expressed concern that they do not typically collect TINs from dependents covered under their policies and that they may have difficulty obtaining TINs for some covered individuals. Other commenters suggested allowing alternative means of identifying individuals, such as unique enrollee identification numbers similar to the method used by the Massachusetts Health Connector (the State-based exchange), or allowing reporting without TINs for individuals who enroll in coverage but decline to provide a TIN. Some commenters suggested simplifying reporting requirements for dependents or providing alternatives in

reporting TINs for new beneficiaries and others who may not provide TINs at the time of enrollment.

The proposed regulations adopt TIN reporting, consistent with the statute. Section 6055 reporting allows individuals to confirm their coverage and the IRS to verify that coverage without the need to contact the individuals. The use of TINs to cross-check individuals against coverage months is the most efficient way for individuals and the IRS to avoid the need for follow-up. Accordingly, covered individuals have an interest in providing TINs to reporting entities.

Federal tax records for individuals for all purposes are maintained by TIN and individual taxpayers identify themselves on their returns by TIN. Establishing another method of identifying individuals for sections 5000A and 6055 purposes would require the IRS to create, and taxpayers to adapt to, an entire parallel identification system solely for this purpose.

While section 6055 and the proposed regulations require TINs for administering section 5000A, reporting entities that make reasonable efforts to collect TINs but do not receive them will not be subject to penalties under sections 6721 and 6722 for failure to timely and accurately report. In particular, section 6055 reporting is governed by the same procedures, limitations, and protections as other information reporting that requires obtaining and reporting TINs. Section 6724 and the regulations under that section waive penalties on reporting entities for a reasonable failure to include correct TIN information on a return or statement, including those required under section 6055. Penalties are waived if the reporting entity demonstrates that it acted in a responsible manner both before and after the failure occurred, and that the failure was due to significant mitigating factors or events beyond the reporting entity's control. In general, a reporting entity acts responsibly in attempting to solicit a TIN if after an initial, unsuccessful request for a TIN (for example, at the time of enrollment), the reporting entity makes two consecutive annual TIN solicitations. No section 6724 penalty is imposed unless the reporting entity fails to make the two additional solicitations. Accordingly, section 6055 reporting entities will not be unduly penalized for failing to report a TIN.

As a backstop to reporting a TIN, the proposed regulations allow reporting entities to report date of birth if a TIN is not available. This alternative should not be used, however, unless the reporting entity has made reasonable efforts to obtain the information by requesting that a covered individual provide the TIN.

A commenter requested that the proposed regulations provide rules authorizing reporting entities to request TINs. This authority exists under section 6109(a)(2) and § 301.6109–1(b)(1) of the Procedure and Administration Regulations, which require individuals to furnish TINs to persons that must file information returns.

A commenter noted that issuers and employers may have difficulty obtaining overseas addresses for individuals living abroad. The proposed regulations provide that only the last known address for the responsible individual must be reported.

c. Coverage Dates

For purposes of section 5000A, an individual who has coverage on any day in a month is treated as having minimum essential coverage for the entire month. See proposed § 1.5000A–1(b) (78 FR 7314). As a result, the specific coverage dates are not necessary for administering and complying with rules relating to minimum essential coverage. Accordingly, the proposed regulations do not require reporting of the specific dates of coverage. Instead, the proposed regulations generally require reporting of the months during which an individual is treated as having minimum essential coverage.

A commenter noted that coverage dates may be inaccurate because coverage may be terminated or reinstated after the reporting date for periods occurring before the reporting date. Under section 6724 and the regulations under that section, the IRS may waive penalties if there is reasonable cause for the failure to correct an information return for retroactive terminations or reinstatements that are determined after the calendar year in which coverage was terminated or reinstated.

A commenter recommended permitting separate returns or creating special forms to report coverage for individuals who change their coverage during the year to a different health plan with the same issuer. Although the proposed regulations do not adopt a rule addressing this situation, additional procedures that are responsive to this comment may be provided in IRS forms and instructions, see § 601.602.

A commenter noted that employers face challenges in determining coverage dates for employees and dependents, including seasonal and temporary workers whose term of employment changes during the year. The commenter recommended that the rules allow reporting an individual's enrollment in minimum essential coverage as of a fixed date each year to accommodate an employer's administrative, payroll, and recordkeeping procedures. The individual responsibility payment under section 5000A applies to individuals on a monthly basis, so reporting based on one day during the year would not be sufficient. Additionally, varying reporting dates would be difficult to administer and would produce information less useful to taxpayers, who generally file their tax returns and must determine their coverage based on a calendar year. Accordingly, the proposed regulations do not adopt this suggestion. Comments are welcome on potential alternative ways to address the challenges associated with determining coverage dates when employment changes.

d. Supplemental Coverage Arrangements

A commenter asked whether an employer and an issuer must coordinate section 6055 reporting for an employer-sponsored group health plan that consists of an insured high-deductible health plan (HDHP) and additional health benefits provided through a contribution to a health savings account. Health savings accounts are not minimum essential coverage, and therefore section 6055 reporting is not required for them. Additionally, the proposed regulations provide that reporting is not required for arrangements such as health reimbursement arrangements that supplement minimum essential coverage.

3. Time and Manner of Filing

a. Form of Return

The proposed regulations provide that the return under section 6055 may be made on Form 1095–B or another form the IRS designates, or on a substitute form. A substitute form must comply with revenue procedures or other published guidance, see § 601.601(d)(2), that apply to substitute forms. The proposed regulations require that information returns be submitted to the IRS with a transmittal form, Form 1094–B. In accordance with usual procedure, these forms will be made available in draft form at a later date.

b. Time for Filing Returns

The proposed regulations provide for reporting entities to file the return and

transmittal form on or before February 28 (or March 31 if filed electronically) of the year following the calendar year in which they provided minimum essential coverage. Commenters suggested that the proposed regulations provide different reporting deadlines for fiscal year health plans to avoid calendar year reporting of data from multiple plan years. Since most individuals file calendar year returns, permitting fiscal year reporting would interfere with return preparation and processing for individuals potentially subject to the section 5000A individual shared responsibility payment. Therefore, the proposed regulations do not adopt this comment.

c. Electronic Reporting

Commenters recommended permitting electronic reporting under section 6055. Section 6011(e) and § 301.6011–2 require high-volume filers (those who file 250 or more returns during the calendar year) to file electronically. The proposed regulations provide that these electronic filing requirements apply to information returns under section 6055, but do not limit electronic filing to high-volume filers. Accordingly, any reporting entity may file electronically under section 6055.

4. Combined Reporting

As discussed earlier in this preamble, applicable large employers that provide minimum essential coverage on a self-insured basis are subject to the reporting requirements of sections 6055 and 6056, as well as the requirement under section 6051 to file Form W–2, Wage and Tax Statement, showing wages paid to employees and taxes withheld. Notices 2012–32 and 2012–33 requested comments on how to minimize duplication in reporting under these provisions.

Several commenters recommended that the regulations allow combined information reporting under sections 6055 and 6056 for applicable large employers that sponsor self-insured group health plans and must report under both sections. Other commenters recommended that employers be permitted to use a single information return to report under sections 6051 and 6055, for example by adding the information required under section 6055 to Form W–2.

As discussed elsewhere in this preamble, these proposed regulations seek to simplify reporting and reduce duplication through a number of approaches. In particular, the proposed regulations provide that issuers need not report under section 6055 for individual market qualified health plans enrolled in through an Exchange. The proposed regulations also provide relief from the requirement to report several items of information that are unnecessary for tax administration or are available from other reporting, and they allow the use of substitute forms and statements to individuals, which, under future guidance, may include furnishing a single substitute statement to covered individuals for both sections 6055 and 6056.

Accordingly, while the rules for section 6055 reporting in the proposed regulations do not assume full combined reporting under sections 6055, 6056 and 6051, they reflect other means of avoiding duplication and simplifying reporting. We continue to seek comments on other ways to streamline the reporting methods that would be permissible under the statute.

5. Statements Furnished to Individuals

The proposed regulations provide that a reporting entity must furnish a statement to the covered individual providing the policy number and the name, address, and a contact number for the reporting entity, and the information required to be reported to the IRS. The proposed regulations permit substitute statements that include the information required to be shown on the return filed with the IRS and comply with applicable requirements in published guidance relating to substitute statements. See § 601.601(d)(2) of this chapter. A substitute statement that includes the information required by both sections 6055 and 6056 in a single statement may be permitted by future guidance.

Commenters recommended permitting electronic delivery of statements to individuals. A commenter suggested that the regulations provide rules for electronic delivery of statements to individuals that are similar to the rules under section 2715 of the Public Health Service Act for providing a summary of benefits and coverage. The commenter suggested that these reporting regulations permit the furnishing of one electronic statement per home address rather than multiple statements per household. Another commenter requested guidance on procedures when an email notice is returned due to an incorrect address.

The proposed regulations permit electronic delivery of statements to individuals if the recipient consents. In response to concerns about the need to furnish a statement to each individual, the proposed regulations also permit furnishing only one statement per address. Comments are requested on whether and under what circumstances the regulations should direct reporting entities to provide a statement to another individual (who may, for example, need the statement to determine his or her tax liability).

Commenters expressed concern about protecting the privacy of individuals who provide TINs and about disclosure of the TINs to other parties. The regulations provide that section 6055 information reporting will be included in the IRS truncated TIN program. Accordingly, to protect the privacy of covered individuals, statements furnished to individuals under section 6055 are not required to disclose their complete TINs.

A commenter recommended that the statement to individuals should explain minimum essential coverage and advise taxpayers that they may be subject to a penalty for months in which they do not have minimum essential coverage. The proposed regulations do not include rules addressing educational content in the statement. However, information on the section 5000A individual shared responsibility payment may be included in IRS forms, instructions, and publications.

6. Penalties

Commenters recommended providing procedures for correcting errors in reporting and a safe harbor from penalties for an issuer that fails to report information that another entity fails to provide to the issuer. The proposed regulations provide that the provisions of section 6724(a) providing relief for a failure due to reasonable cause apply to reporting under section 6055. Because the procedures described in § 301.6721–1(b), which provide for reduced penalties for reporting errors that are timely corrected, will apply to corrections of errors in reporting under section 6055 that are not due to reasonable cause, the proposed regulations do not prescribe separate rules for correcting errors.

Proposed Effective/Applicability Date

These regulations are proposed to apply for calendar years beginning after December 31, 2014. Consistent with Notice 2013–45, reporting entities will not be subject to penalties for failure to comply with the section 6055 reporting requirements for coverage in 2014, which would have resulted in reporting in 2015 and furnishing statements to covered individuals in 2015. Accordingly, a reporting entity will not be subject to penalties if it first reports beginning in 2016 for 2015, including the furnishing of statements to covered individuals in 2016 with respect to

2015. Taxpayers are encouraged, however, to voluntarily comply with section 6055 information reporting for minimum essential coverage provided in 2014 by applying these regulations once finalized.

Special Analyses

It has been determined that this notice of proposed rulemaking is not a significant regulatory action as defined in Executive Order 12866, as supplemented by Executive Order 13563. Therefore, a regulatory assessment is not required. It has also been determined that section 553(b) of the Administrative Procedure Act (5 U.S.C. chapter 5) does not apply to these regulations.

It is hereby certified that these regulations will not have a significant economic impact on a substantial number of small entities. This certification is based on the fact that the information collection required under these regulations is imposed under section 6055. Consistent with the statute, the proposed regulations require a person that provides minimum essential coverage to an individual to file a return with the IRS reporting certain information and to furnish a statement to the responsible individual who enrolled an individual or family in the coverage. These regulations primarily provide the method of filing and furnishing returns and statements under section 6055. Moreover, the proposed regulations attempt to minimize the burden associated with this collection of information by limiting reporting to the information that the IRS will use to verify minimum essential coverage and administer tax credits.

Based on these facts, a Regulatory Flexibility Analysis under the Regulatory Flexibility Act (5 U.S.C. chapter 6) is not required.

Pursuant to section 7805(f) of the Code, this notice of proposed rulemaking has been submitted to the Chief Counsel for Advocacy of the Small Business Administration for comment on its impact on small business.

Comments and Public Hearing

Before these proposed regulations are adopted as final regulations, consideration will be given to any comments that are submitted timely to the IRS as prescribed in this preamble under the **ADDRESSES** heading. The IRS and Treasury Department request comments on all aspects of the proposed rules. All comments will be available at *www.regulations.gov* or upon request.

A public hearing has been scheduled for November 19, 2013, at 10 a.m., in the auditorium, Internal Revenue Building, 1111 Constitution Avenue NW., Washington, DC. Due to building security procedures, visitors must enter at the Constitution Avenue entrance. All visitors must present photo identification to enter the building. Because of access restrictions, visitors will not be admitted beyond the immediate entrance more than 30 minutes before the hearing starts. For information about having your name placed on the building access list to attend the hearing, see the **FOR FURTHER INFORMATION CONTACT** section of this preamble.

The rules of 26 CFR 601.601(a)(3) apply to the hearing. Persons who wish to present oral comments at the hearing must submit written or electronic comments by November 8, 2013, an outline of topics to be discussed and the time to be devoted to each topic by (signed original and eight (8) copies by November 8, 2013. A period of 10 minutes will be allotted to each person for making comments.

An agenda showing the scheduling of the speakers will be prepared after the deadline for receiving outlines has passed. Copies of the agenda will be available free of charge at the hearing.

Drafting Information

The principal authors of these proposed regulations are Andrew Braden and Frank W. Dunham III of the Office of Associate Chief Counsel (Income Tax and Accounting). However, other personnel from the IRS and the Treasury Department participated in the development of the regulations.

List of Subjects

26 CFR Part 1

Income taxes, Reporting and recordkeeping requirements.

26 CFR Part 301

Employment taxes, Estate taxes, Excise taxes, Gift taxes, Income taxes, Penalties, Reporting and recordkeeping requirements.

Proposed Amendments to the Regulations

Accordingly, 26 CFR parts 1 and 301 are proposed to be amended as follows:

PART 1—INCOME TAXES

■ **Paragraph 1.** The authority citation for part 1 is amended by adding entries in numerical order to read in part as follows:

Authority: 26 U.S.C. 7805 * * *

Sections 1.6055–1 and 1.6055–2 also issued under 26 U.S.C. 6055.

■ **Par. 2.** Sections 1.6055–1 and 1.6055–2 are added to read as follows:

§ 1.6055–1 Information reporting for minimum essential coverage.

(a) *Information reporting requirement.* Every person that provides minimum essential coverage to an individual during a calendar year must file an information return and a transmittal on forms prescribed by the Internal Revenue Service.

(b) *Definitions*—(1) *In general.* The definitions in this paragraph (b) apply for purposes of this section.

(2) *Affordable Care Act.* The term *Affordable Care Act* refers to the Patient Protection and Affordable Care Act, Public Law 111–148 (124 Stat. 119 (2010)), and the Health Care and Education Reconciliation Act of 2010, Public Law 111–152 (124 Stat. 1029 (2010)), and amendments to those acts.

(3) *ERISA.* The term *ERISA* means the Employee Retirement Income Security Act of 1974, as amended (29 U.S.C. 1001 et seq.).

(4) *Exchange.* Exchange has the same meaning as in 45 CFR 155.20.

(5) *Government employer.* The term *government employer* means an employer that is a governmental unit or an agency or instrumentality of a governmental unit.

(6) *Governmental unit.* The term *governmental unit* refers to the government of the United States, any State or political subdivision of a State, or any Indian tribal government (as defined in section 7701(a)(40)) or subdivision of an Indian tribal government (as defined in section 7871(d)).

(7) *Agency or instrumentality of a governmental unit.* [Reserved]

(8) *Minimum essential coverage.* Minimum essential coverage is defined in section 5000A(f) and regulations issued under that section.

(9) *Qualified health plan.* The term *qualified health plan* has the same meaning as in section 1301(a) of the Affordable Care Act (42 U.S.C. 18021(a)).

(10) *Reporting entity.* A reporting entity is any person that must report, under section 6055 and this section, minimum essential coverage provided to an individual.

(11) *Responsible individual.* A responsible individual is a primary insured, employee, former employee, uniformed services sponsor, parent, or other related person named on an application who enrolls one or more individuals in minimum essential coverage.

(12) *Taxpayer identifying number.* The term *taxpayer identifying number*

(TIN) has the same meaning as in section 7701(a)(41).

(c) *Persons required to report*—(1) *In general.* The following persons must file the information return and transmittal form required under paragraph (a) of this section to report minimum essential coverage—

(i) Health insurance issuers, or carriers (as used in 5 U.S.C. 8901), for all insured coverage, except as provided in paragraph (c)(3)(ii) of this section;

(ii) Plan sponsors of self-insured group health plan coverage;

(iii) The executive department or agency of a governmental unit that provides coverage under a government-sponsored program (within the meaning of section 5000A(f)(1)(A)); and

(iv) Any other person that provides minimum essential coverage to an individual.

(2) *Plan sponsors of self-insured group health plan coverage*—(i) *In general.* For purposes of this section, a plan sponsor of self-insured group health plan coverage is—

(A) The employer for a self-insured group health plan or arrangement established or maintained by a single employer (determined without application of section 414(b), (c), (m) or (o)), including each participating employer with respect to a self-insured group health plan or arrangement established or maintained by more than one employer (other than a Multiple Employer Welfare Arrangement as defined in section 3(40) of ERISA));

(B) The association, committee, joint board of trustees, or other similar group of representatives of the parties who establish or maintain the plan for a self-insured group health plan or arrangement that is a multiemployer plan (as defined in section 3(37) of ERISA).

(C) The employee organization for a self-insured group health plan or arrangement maintained solely by an employee organization;

(D) Each participating employer for a self-insured group health plan or arrangement maintained by a Multiple Employer Welfare Arrangement (as defined in section 3(40) of ERISA) with respect to the participating employer's own employees; and

(E) For a self-insured group health plan or arrangement for which a plan sponsor is not otherwise identified in paragraphs (c)(2)(1)(A) through (c)(2)(1)(D) of this section, the person designated by plan terms as the plan sponsor or plan administrator or, if no person is designated as the administrator and a plan sponsor cannot be identified, each entity that maintains the plan or arrangement.

(ii) *Government employers.* Unless otherwise provided by statute or regulation, a government employer that maintains a self-insured group health plan or arrangement may enter into a written agreement with another governmental unit, or an agency or instrumentality of a governmental unit, that designates the other governmental unit, agency, or instrumentality as the person required to file the returns and to furnish the statements required by this section for some or all of the individuals receiving minimum essential coverage under that plan or arrangement. The designated governmental unit, agency, or instrumentality must be part of or related to the same governmental unit as the government employer (for example, a political subdivision of a state may designate the state or another political subdivision of the state) and agree to the designation. The government employer must make or revoke the designation before the earlier of the deadline for filing the returns or furnishing the statements required by this section. If the requirements of this paragraph (c)(2)(ii) are met, the designated governmental unit, agency, or instrumentality is the sponsor under paragraph (c)(2)(i) of this section. If no entity is designated, the government employer that maintains the self-insured group health plan or arrangement is the sponsor under paragraph (c)(2)(i) of this section.

(3) *Special rules for government-sponsored programs*—(i) *Medicaid and Children's Health Insurance Program (CHIP) coverage.* The State agency that administers the Medicaid program under title XIX of the Social Security Act (42 U.S.C. 1396 and following sections) or the CHIP program under title XXI of the Social Security Act (42 U.S.C. 1396 and following sections) must file the returns and furnish the statements required by this section for those programs.

(ii) *Government-sponsored coverage provided through health insurance issuers.* An executive department or agency of a governmental unit that provides coverage under a government-sponsored program through a health insurance issuer (such as Medicaid, CHIP, or Medicare) must file the returns and furnish the statements required by this section.

(iii) *Nonappropriated Fund Health Benefits Program.* The Secretary of Defense may designate the Department of Defense components (as used in DoD 7000.14–R, Department of Defense Financial Management Regulations) that must file the returns and furnish the statements required by this section for the Nonappropriated Fund Health Benefits Program.

(4) *Other arrangements recognized as minimum essential coverage.* The Commissioner may designate in published guidance, see § 601.601(d) of this chapter, the reporting entity for arrangements the Secretary of Health and Human Services, in coordination with the Secretary of the Treasury, recognizes under section 5000A(f)(1)(E) as minimum essential coverage.

(d) *Information required to be reported to the Internal Revenue Service*—(1) *In general.* All information returns required by this section must report the following information for the calendar year of coverage—

(i) Name, address, and employer identification number (EIN) for the person required to file the return;

(ii) Name, address, and TIN, or date of birth if a TIN is not available, of the responsible individual;

(iii) Name and TIN, or date of birth if a TIN is not available, of each individual covered under the policy or program;

(iv) For each covered individual, the months for which, for at least one day, the individual was enrolled in coverage and entitled to receive benefits; and

(v) Any other information specified in forms, instructions, or published guidance, see §§ 601.601(d) and 601.602 of this chapter.

(2) *Information relating to employer-provided coverage.* In addition to the information described in paragraph (d)(1) of this section, information returns reporting minimum essential coverage provided to an individual that is coverage provided by a health insurance issuer through a group health plan must report—

(i) Name, address, and EIN of the employer sponsoring the plan;

(ii) Whether the coverage is a qualified health plan enrolled in through the Small Business Health Options Program (SHOP) and the SHOP's unique identifier; and

(iii) Other information specified in forms, instructions, or published guidance, see §§ 601.601(d) and 601.602 of this chapter.

(e) *Reporting not required*—(1) *Qualified health plans.* A health insurance issuer is not required to file a return or furnish a report under this section for coverage in a qualified health plan in the individual market enrolled in through an Exchange.

(2) *Additional health benefits.* No information return is required to report arrangements that provide benefits in addition or as a supplement to a health plan or arrangement that constitutes minimum essential coverage.

(3) *Individuals not enrolled in coverage.* No reporting is required under this section for coverage offered to individuals who do not enroll.

(f) *Time and place for filing return*—(1) *In general.* A reporting entity must file the return and transmittal form required under paragraph (a) of this section on or before February 28 (March 31 if filed electronically) of the year following the calendar year in which it provided minimum essential coverage to an individual. A reporting entity must file the return and transmittal form at the address specified on the return form or in its instructions.

(2) *Extensions of time.* See § 1.6081–8 for rules relating to extensions of time to file.

(3) *Electronic filing.* See § 301.6011–8 of this chapter for rules relating to electronic filing.

(4) *Form of return.* A return required under this paragraph (f) may be made on Form 1095–B or other form designated by the Internal Revenue Service or on a substitute form. A substitute form must comply with revenue procedures or other published guidance (see § 601.601(d)(2) of this chapter) that apply to substitute forms.

(g) *Statements to be furnished to individuals*—(1) *In general.* Every person required to file a return under this section must furnish to the responsible individual identified on the return a written statement showing—

(i) Contact phone number for the person required to file the return and policy number, if applicable; and

(ii) Information described in paragraph (d) of this section for the reporting entity and each individual listed on the return.

(2) *Statements for individuals other than the responsible individual.* A reporting entity is not required to provide a statement described in paragraph (g)(1) of this section to an individual who is not the responsible individual.

(3) *Form of the statement.* A statement required under this paragraph (g) may be made either by furnishing to the responsible individual identified in the return a copy of the return filed with the IRS or on a substitute statement. A substitute statement must include the information required to be shown on the return filed with the IRS, and must comply with requirements in published guidance (see § 601.601(d)(2) of this chapter) relating to substitute statements. An IRS truncated taxpayer identifying number may be used as the identifying number for an individual in lieu of the identifying number appearing on the corresponding information return filed with the IRS.

(4) *Time and manner for furnishing statements.* A reporting entity must furnish the statements required under this paragraph (g) on or before January 31 of the year following the calendar year in which minimum essential coverage is provided. If mailed, the statement must be sent to the individual's last known permanent address or, if no permanent address is known, to the individual's temporary address. A reporting entity may furnish the statement electronically in accordance with § 1.6055–2.

(h) *Penalties*—(1) *Failure to file correct returns.* The section 6721 penalty may apply to a person that fails to file information returns required by this section on or before the required filing date, fails to include all of the required information on the return, or includes incorrect information on the return. See section 6724 and the regulations under that section for rules relating to waivers of penalties for certain failures due to reasonable cause.

(2) *Failure to furnish correct information statements.* The section 6722 penalty may apply to a reporting entity that fails to furnish statements required by this section on or before the prescribed date, fails to include all the required information on the statement, or includes incorrect information on the statement. See section 6724 and the regulations under that section for rules relating to waivers of penalties for certain failures due to reasonable cause.

(i) *Effective/applicability date.* This section applies for calendar years beginning after December 31, 2014. Reporting entities will not be subject to penalties under section 6721 or 6722 with respect to the reporting requirements for 2014 (for information returns that would have been required to be filed and statements that would have been required to be furnished to covered individuals in 2015 with respect to 2014).

§ 1.6055–2 Electronic furnishing of statements reporting minimum essential coverage.

(a) *Electronic furnishing of statements*—(1) *In general.* A person required by section 6055 to furnish a statement (furnisher) to a responsible individual (a recipient) may furnish the statement in an electronic format in lieu of a paper format. A furnisher who meets the requirements of paragraphs (a)(2) through (a)(6) of this section is treated as furnishing the statement in a timely manner.

(2) *Consent*—(i) *In general.* The recipient must have affirmatively consented to receive the statement in an electronic format. The consent may be made electronically in any manner that reasonably demonstrates that the recipient can access the statement in the electronic format in which it will be furnished. Alternatively, the consent may be made in a paper document that is confirmed electronically.

(ii) *Withdrawal of consent.* The furnisher may provide in the disclosure furnished pursuant to paragraph (a)(3)(v) of this section that a withdrawal of consent takes effect either on the date the furnisher receives it or on another date no more than 60 days later. A furnisher may treat a request for a paper statement as a withdrawal of consent. If the furnisher provides a statement after the withdrawal of consent takes effect, the recipient has not consented to receive the statement in electronic format.

(iii) *Change in hardware or software requirements.* If a change in the hardware or software required to access the statement creates a material risk that the recipient will not be able to access a statement, a furnisher must, prior to changing the hardware or software, notify the recipient. The notice must describe the revised hardware and software required to access the statement and inform the recipient that a new consent to receive the statement in the revised electronic format must be provided to the furnisher. After implementing the revised hardware or software, the furnisher must obtain a new consent or confirmation of consent to receive the statement electronically from the recipient.

(iv) *Examples.* The following examples illustrate the rules of this paragraph (a)(2):

Example 1. Furnisher F sends Recipient R a letter stating that R may consent to receive the statement required under section 6055 electronically on a Web site instead of in a paper format. The letter contains instructions explaining how to consent to receive the statement electronically by accessing the Web site, downloading and completing the consent document, and emailing the completed consent back to F. The consent document posted on the Web site uses the same electronic format that F will use for the electronically furnished statement. R reads the instructions and submits the consent in the manner provided in the instructions. R has consented to receive the statement required under section 6055 electronically in the manner described in paragraph (a)(2)(i) of this section.

Example 2. Furnisher F sends Recipient R an email stating that R may consent to receive the statement required under section 6055 electronically instead of in a paper format. The email contains an attachment instructing R how to consent to receive the statement required under section 6055 electronically. The email attachment uses the same electronic format that F will use for the

electronically furnished statement. R opens the attachment, reads the instructions, and submits the consent in the manner provided in the instructions. R has consented to receive the statement required under section 6055 electronically in the manner described in paragraph (a)(2)(i) of this section.

Example 3. Furnisher F posts a notice on its Web site stating that Recipient R may receive the statement required under section 6055 electronically instead of in a paper format. The Web site contains instructions on how R may access a secure Web page and consent to receive the statements electronically. R accesses the secure Web page and follows the instructions for giving consent. R has consented to receive the statement required under section 6055 electronically in the manner described in paragraph (a)(2)(i) of this section.

(3) *Required disclosures*—(i) *In general.* Prior to, or at the time of, a recipient's consent, a furnisher must provide to the recipient a clear and conspicuous disclosure statement containing each of the disclosures described in this paragraph (a)(3).

(ii) *Paper statement.* The furnisher must inform the recipient that the statement will be furnished on paper if the recipient does not consent to receive it electronically.

(iii) *Scope and duration of consent.* The furnisher must inform the recipient of the scope and duration of the consent. For example, the recipient must be informed whether the consent applies to each statement required to be furnished after the consent is given until it is withdrawn or only to the first statement required to be furnished following the consent.

(iv) *Post-consent request for a paper statement.* The furnisher must inform the recipient of any procedure for obtaining a paper copy of the recipient's statement after giving the consent described in paragraph (a)(2)(i) of this section and whether a request for a paper statement will be treated as a withdrawal of consent.

(v) *Withdrawal of consent.* The furnisher must inform the recipient that—

(A) The recipient may withdraw a consent by writing (electronically or on paper) to the person or department whose name, mailing address, telephone number, and email address is provided in the disclosure statement;

(B) The furnisher will confirm the withdrawal and the date on which it takes effect in writing (either electronically or on paper); and

(C) A withdrawal of consent does not apply to a statement that was furnished electronically in the manner described in this paragraph (a) before the date on which the withdrawal of consent takes effect.

(vi) *Notice of termination.* The furnisher must inform the recipient of the conditions under which the furnisher will cease furnishing statements electronically to the recipient (for example, termination of the recipient's employment with a furnisher who is the recipient's employer).

(vii) *Updating information.* The furnisher must inform the recipient of the procedures for updating the information needed to contact the recipient. The furnisher must inform the recipient of any change in the furnisher's contact information.

(viii) *Hardware and software requirements.* The furnisher must provide the recipient with a description of the hardware and software required to access, print, and retain the statement, and the date when the statement will no longer be available on the Web site. The furnisher must advise the recipient that the statement may be required to be printed and attached to a Federal, State, or local income tax return.

(4) *Format.* The electronic version of the statement must contain all required information and comply with applicable published guidance (see § 601.601(d) of this chapter) relating to substitute statements to recipients.

(5) *Notice*—(i) *In general.* If a statement is furnished on a Web site, the furnisher must notify the recipient. The notice may be delivered by mail, electronic mail, or in person. The notice must provide instructions on how to access and print the statement and include the following statement in capital letters, ''IMPORTANT TAX RETURN DOCUMENT AVAILABLE.'' If the notice is provided by electronic mail, this statement must be on the subject line of the electronic mail.

(ii) *Undeliverable electronic address.* If an electronic notice described in paragraph (a)(5)(i) of this section is returned as undeliverable, and the furnisher cannot obtain the correct electronic address from the furnisher's records or from the recipient, the furnisher must furnish the notice by mail or in person within 30 days after the electronic notice is returned.

(iii) *Corrected statement.* The furnisher must furnish a corrected statement to the recipient electronically if the original statement was furnished electronically. If the original statement was furnished through a Web site posting, the furnisher must notify the recipient that it has posted the corrected statement on the Web site in the manner described in paragraph (a)(5)(i) of this section within 30 days of the posting. The corrected statement or the notice must be furnished by mail or in person if—

(A) An electronic notice of the Web site posting of an original statement or the corrected statement was returned as undeliverable; and

(B) The recipient has not provided a new email address.

(6) *Access period.* Statements furnished on a Web site must be retained on the Web site through October 15 of the year following the calendar year to which the statements relate (or the first business day after October 15, if October 15 falls on a Saturday, Sunday, or legal holiday). The furnisher must maintain access to corrected statements that are posted on the Web site through October 15 of the year following the calendar year to which the statements relate (or the first business day after such October 15, if October 15 falls on a Saturday, Sunday, or legal holiday) or the date 90 days after the corrected forms are posted, whichever is later.

(7) *Paper statements after withdrawal of consent.* A furnisher must furnish a paper statement if a recipient withdraws consent to receive a statement electronically and the withdrawal takes effect before the statement is furnished. A paper statement furnished after the statement due date under this paragraph (a)(7) is timely if furnished within 30 days after the date the furnisher receives the withdrawal of consent.

(b) *Effective/applicability date.* This section applies for calendar years beginning after December 31, 2014. Reporting entities will not be subject to penalties under section 6722 with respect to the reporting requirements for 2014 (for statements that would have been required to be furnished to covered individuals in 2015 with respect to 2014).

■ **Par. 3.** Section 1.6081–8 is amended by adding the language ''1095 series'' between the words ''1042–S,'' and ''1098'' in paragraph (a).

PART 301—PROCEDURE AND ADMINISTRATION

■ **Par. 4.** The authority citation for part 301 continues to read in part as follows:

Authority: 26 U.S.C. 7805 * * *

■ **Par. 5.** Section 301.6011–8 is added to read as follows:

§ 301.6011–8 Required use of magnetic media to report minimum essential coverage.

(a) *Returns reporting minimum essential coverage must be filed on magnetic media.* A person required to file an information return reporting minimum essential coverage under

§ 1.6055–1 of this chapter must file the return on magnetic media if the person is required to file to least 250 returns during the calendar year. Returns filed on magnetic media must be made in accordance with applicable publications, forms, instructions, or published guidance, see §§ 601.601(d) and 601.602 of this chapter.

(b) *Magnetic media.* For purposes of this section, the term *magnetic media* has the same meaning as in § 301.6011–2(a)(1).

(c) *Determination of 250 returns.* For purposes of this section, a person is required to file at least 250 returns if, during the calendar year, the person is required to file at least 250 returns of any type, including information returns (for example, Forms W–2, Forms 1099), income tax returns, employment tax returns, and excise tax returns.

(d) *Waiver.* The Commissioner may waive the requirements of this section in cases of hardship in accordance with § 301.6011–2(c)(2)(i).

(e) *Failure to file.* If a person fails to file an information return on magnetic media when required by this section, the person is deemed to have failed to file the return. See section 6721 for penalties for failure to file returns and see section 6724 and the regulations under section 6721 for failure to file on magnetic media.

(f) *Effective/applicability date.* This section applies to returns on Form 1095–B or another form the IRS designates required to be filed after December 31, 2015. Reporting entities will not be subject to penalties under section 6721 with respect to the reporting requirements for 2014 (for information returns that would have been required to be filed in 2015 with respect to 2014).

■ **Par 6.** Section 301.6721–1 is amended by removing the word ''or'' after paragraph (g)(3)(xxii), removing the period and adding a semi-colon in its place after paragraph (g)(3)(xxiii), and adding paragraphs (g)(3)(xxiv) and (g)(3)(xxv) to read as follows:

§ 301.6721–1 Failure to file correct information returns.

* * * * *

(g) * * *

(3) * * *

(xxiv) Section 6055 (relating to information returns reporting minimum essential coverage); or

(xxv) Section 6056 (relating to information returns reporting on offers of health insurance coverage by applicable large employer members).

* * * * *

■ **Par 7.** Section 301.6722–1 is amended by removing the word ''or'' after paragraph (d)(2)(xxxi), removing the period and adding a semi-colon in its place after paragraph (d)(2)(xxxii), and adding paragraphs (d)(2)(xxxiii) and (d)(2)(xxxiv) to read as follows:

§ 301.6722–1 Failure to furnish correct payee statements.

* * * * *

(d) * * *

(2) * * *

(xxxiii) Section 6055 (relating to information returns reporting minimum essential coverage); or

(xxxiv) Section 6056 (relating to information returns reporting on offers of health insurance coverage by applicable large employer members).

* * * * *

Heather C. Maloy,

Acting Deputy Commissioner for Services and Enforcement.

[FR Doc. 2013–21783 Filed 9–5–13; 4:15 pm]

BILLING CODE 4830–01–P

DEPARTMENT OF THE TREASURY

Internal Revenue Service

26 CFR Part 301

[REG–136630–12]

RIN 1545–BL26

Information Reporting by Applicable Large Employers on Health Insurance Coverage Offered Under Employer-Sponsored Plans

AGENCY: Internal Revenue Service (IRS), Treasury.

ACTION: Notice of proposed rulemaking and notice of public hearing.

SUMMARY: This document contains proposed regulations providing guidance to employers that are subject to the information reporting requirements under section 6056 of the Internal Revenue Code (Code), enacted by the Affordable Care Act. Section 6056 requires those employers to report to the IRS information about their compliance with the employer shared responsibility provisions of section 4980H of the Code and about the health care coverage they have offered employees. Section 6056 also requires those employers to furnish related statements to employees so that employees may use the statements to help determine whether, for each month of the calendar year, they can claim on their tax returns a premium tax credit under section 36B of the Code (premium tax credit). In addition, that information will be used to administer and ensure compliance with the eligibility requirements for the employer shared responsibility provisions and the premium tax credit. The proposed regulations affect applicable large employers (generally meaning employers with 50 or more full-time employees, including full-time equivalent employees, in the prior year), employees and other individuals.

This document also provides notice of a public hearing on these proposed rules.

DATES: Written or electronic comments must be received by November 8, 2013. Requests to speak and outlines of topics to be discussed at the public hearing scheduled for November 18, 2013, at 10 a.m., must be received by November 8, 2013.

ADDRESSES: Send submissions to: CC:PA:LPD:PR (REG–136630–12), Room 5205, Internal Revenue Service, PO Box 7604, Ben Franklin Station, Washington, DC 20044. Submissions may be hand-delivered Monday through Friday between the hours of 8 a.m. and 4 p.m. to CC:PA:LPD:PR (REG–136630–12), Courier's Desk, Internal Revenue Service, 1111 Constitution Avenue NW., Washington, DC, or sent electronically, via the Federal eRulemaking Portal at *www.regulations.gov* (IRS REG–136630–12). The public hearing will be held in the Auditorium, Internal Revenue Building, 1111 Constitution Avenue NW., Washington, DC.

FOR FURTHER INFORMATION CONTACT: Concerning the proposed regulations, Ligeia Donis (202) 927–9639; concerning submission of comments, the hearing, and/or to be placed on the building access list to attend the hearing, please contact Oluwafunmilayo (Funmi) Taylor at (202) 622–7180 (not toll-free numbers).

SUPPLEMENTARY INFORMATION:

Paperwork Reduction Act

The collection of information contained in this notice of proposed rulemaking has been submitted to the Office of Management and Budget for review in accordance with the Paperwork Reduction Act of 1995 (44 U.S.C. 3507(d)). Comments on the collection of information should be sent to the Office of Management and Budget, Attn: Desk Officer for the Department of the Treasury, Office of Information and Regulatory Affairs, Washington, DC 20503, with copies to the Internal Revenue Service, Attn: IRS Reports Clearance Officer, SE:W:CAR:MP:T:T:SP, Washington, DC 20224. Comments on the collection of information should be received by November 8, 2013. Comments are specifically requested concerning:

Whether the proposed collection of information is necessary for the proper performance of the functions of the IRS, including whether the information will have practical utility;

How the quality, utility, and clarity of the information to be collected may be enhanced;

How the burden of complying with the proposed collection of information may be minimized, including through the application of automated collection techniques or other forms of information technology; and

Estimates of capital or start-up costs and costs of operation, maintenance, and purchase of services to provide information.

The collection of information in these proposed regulations is in proposed regulation §§ 301.6011–9, 301.6056–1, and 301.6056–2. This information will be used by the IRS to verify compliance with the return and employee statement requirements under section 6056 for purposes of section 4980H, and with the eligibility requirements for the premium tax credit. This information will be used to determine whether the information has been reported and calculated correctly for purposes of section 4980H and section 6056, and whether claims for the premium tax credit are correct. The likely respondents are employers that are applicable large employers, as defined under section 4980H(c)(2).

An agency may not conduct or sponsor, and a person is not required to respond to, a collection of information unless it displays a valid control number assigned by the Office of Management and Budget.

Books or records relating to a collection of information must be retained as long as their contents may become material in the administration of any internal revenue law. Generally, tax returns and tax return information are confidential, as required by 26 U.S.C. 6103.

Background

Sections I through V of the preamble (''Background'') describe the statutory provisions governing the information reporting requirements, as well as related statutory provisions. Sections VI through XIII of the preamble (''Explanation of Provisions and Summary of Comments'') describe and explain how these regulations propose to implement the statutory provisions of section 6056 and include a discussion of a variety of potential simplified reporting methods that are under consideration. As is typical with regulations on information reporting, these proposed regulations refer generally to additional information that may be required under the applicable forms and instructions. Sections IX.B and C of this preamble set forth the specific data elements that Treasury and the IRS anticipate will be included with the reporting, including the data elements that Treasury and the IRS anticipate will be provided through the use of an indicator code.

Section 6056 [1] requires applicable large employers, as defined in section 4980H(c)(2), to file returns at the time prescribed by the Secretary with respect to each full-time employee and furnish a statement to each full-time employee by January 31 of the calendar year following the calendar year for which the return must be filed. Section 6056 specifies certain information that must be reported on the section 6056 return and related statement, and authorizes the Secretary to require additional information and determine the form of the return. Section 6056 is effective for periods beginning after December 31, 2013; however, Notice 2013–45 (2013–31 IRB 116) provides transition relief for 2014 from the section 6056 information reporting requirements (as well as the section 6055 information reporting requirements relating to the section 5000A individual shared responsibility provisions and the section 4980H employer shared responsibility provisions).

I. Shared Responsibility for Employers (Section 4980H)

One of the purposes of section 6056 reporting is to assist with the administration of the employer shared responsibility provisions added by the Affordable Care Act as section 4980H of the Code. Section 4980H imposes an assessable payment on applicable large employers if certain requirements relating to the provision of health care coverage to full-time employees are not met and one or more full-time employees claim a premium tax credit. On December 28, 2012, Treasury and the IRS released proposed regulations under section 4980H. The proposed regulations under section 4980H were published in the **Federal Register** on January 2, 2013 (REG–138006–12 [78 FR 218]). Section 4980H is effective for months after December 31, 2013; however, Notice 2013–45, issued on July 9, 2013, provides transition relief for 2014 from the section 4980H employer shared responsibility provisions.

The reporting requirements under section 6056 apply only to employers that are subject to section 4980H (which the statute refers to as ''applicable large employers''). Section 4980H(c)(2) defines the term ''applicable large employer'' as, with respect to a calendar year, an employer that employed an average of at least 50 full-time employees on business days during the preceding calendar year. Generally, for purposes of determining applicable large employer status, a full-time employee includes any employee who was employed on average at least 30 hours of service per week and any full-time equivalents determined pursuant to section 4980H(c)(2)(E). All employers treated as a single employer under section 414(b), (c), (m), or (o) are treated as one employer for purposes of determining applicable large employer status. Section 4980H contains rules for determining whether an employer qualifies as an applicable large employer, including special rules addressing an employer's first year of existence and predecessor and successor employers. See section 4980H(c)(2)(C) and proposed § 54.4980H–2. Proposed regulations under section 4980H provide guidance on determining applicable large employer status and determining full-time employee status, including defining and providing rules for calculating hours of service. See proposed §§ 54.4980H–1(a)(21) (definition of hours of service), 54.4980H–2 (determination of applicable large employer status), and 54.4980H–3 (determination of full-time employee status).

II. Premium Tax Credit (Section 36B)

Section 6056 reporting will also be used for the administration of the premium tax credit, which was added by the Affordable Care Act as section 36B of the Code. Section 36B allows an advanceable and refundable premium tax credit to help individuals and families afford health insurance coverage purchased through an Affordable Insurance Exchange (Exchange). An employee is not eligible for a premium tax credit to subsidize the cost of Exchange coverage if the employee is offered affordable coverage under an employer-sponsored plan that provides minimum value, or if the employee enrolls in an employer-sponsored plan. For this purpose, an employer-sponsored plan is affordable if the employee's required contribution for the lowest-cost self-only minimum value coverage offered does not exceed

[1] Section 6056 was enacted by section 1514(a) of the Patient Protection and Affordable Care Act, Public Law 111–148 (124 Stat. 119 (2010)), amended by the Health Care and Education Reconciliation Act of 2010, Public Law 111–152 (124 Stat. 1029 (2010)), and further amended by the Department of Defense and Full-Year Continuing Appropriations Act of 2011, Public Law 112–10 (125 Stat. 38 (2011)) (collectively, the Affordable Care Act).

9.5% of the employee's household income. Thus, an employee (and in the case of an employer-sponsored plan that offers coverage to an employee's spouse or dependents, the employee's spouse and dependents) who does not accept an offer of affordable minimum value coverage under an employer-sponsored plan and who purchase coverage on an Exchange may not be eligible for a premium tax credit. Individuals and the IRS will use the information on the cost of the lowest-cost employer-sponsored self-only coverage that provides minimum value to verify the individual's eligibility for the premium tax credit.[2]

III. Individual Shared Responsibility (Section 5000A)

In addition, the Affordable Care Act added section 5000A to the Code. Section 5000A provides nonexempt individuals with a choice: maintain minimum essential coverage for themselves and any nonexempt family members, or include an additional payment with their Federal income tax return. Section 5000A(f)(1)(B) provides that minimum essential coverage includes coverage under an eligible employer-sponsored plan. Under section 5000A(f)(2), an eligible employer-sponsored plan is, with respect to an employee, a group health plan or group health insurance coverage offered by an employer to the employee that is (1) a governmental plan, within the meaning of section 2791(d)(8) of the Public Health Service Act (42 U.S.C. 300gg–91(d)(8)), or (2) any other plan or coverage offered in the small or large group market within a State. An eligible employer-sponsored plan also includes a grandfathered health plan, as defined in section 5000A(f)(1)(D), offered in a group market. Group health plans within the meaning of section 1301(b)(3) of the Affordable Care Act (42 U.S.C. 18021(b)(3)) include both insured health plans and self-insured health plans. Accordingly, a self-insured group health plan is an eligible employer-sponsored plan. See the Questions and Answers on the Individual Shared Responsibility Provision available on the IRS Web site at *www.irs.gov.*

[2] In connection with providing advance payment of the premium tax credit, the Exchanges will employ a verification process. Because the information concerning household income and other relevant factors that are known to the individual and the Exchanges at that time may differ from the information used to file the tax return after the close of the coverage year, an individual who receives an advance payment of the premium tax credit will also need to calculate the appropriate amount of the credit when filing his or her tax return, and the credit may be more or less than the advance payment.

IV. Information Reporting by Providers of Coverage (Issuers, Self-Insuring Employers, and Sponsors of Certain Government-Sponsored Programs) (Section 6055)

The Affordable Care Act also added section 6055 to the Code, providing for information reporting for the administration of section 5000A. The section 6055 reporting requirements are effective for years beginning after December 31, 2013; however, Notice 2013–45 provides transition relief for 2014 from the section 6055 reporting requirements. Section 6055 requires information reporting by any person that provides minimum essential coverage to an individual during a calendar year, including coverage provided under an eligible employer-sponsored plan, and the furnishing to taxpayers of a related statement covering each individual listed on the section 6055 return. The information reported under section 6055 can be used by individuals and the IRS to verify the months (if any) in which they were covered by minimum essential coverage. Treasury and the IRS are issuing proposed regulations under section 6055 (REG–132455–11) concurrently with these proposed regulations.

V. Reporting Requirements for Applicable Large Employers (Section 6056)

Section 6056 directs an applicable large employer (within the meaning of section 4980H(c)(2)) to file a return with the IRS that reports for each employee who was a full-time employee for one or more months during the calendar year certain information described in section 6056(b) about the health care coverage the employer offered to that employee (or, if applicable, that the employer did not offer health care coverage to that employee). Section 6056 also requires such employers to furnish by January 31 of the calendar year following the calendar year for which the return must be filed a related statement described in section 6056(c) to each full-time employee for whom information is required to be included on the return.

Section 6056(b) describes the return required to be filed with the IRS under section 6056. It states that a return meets the requirements of section 6056 if the return is in such form as the Secretary may prescribe and contains (1) the name, date, and employer's employer identification number (EIN), (2) a certification as to whether the employer offers to its full-time employees (and their dependents) the opportunity to enroll in minimum essential coverage under an eligible employer-sponsored plan (as defined in section 5000A(f)(2)), (3) the number of full-time employees for each month during the calendar year, and (4) the name, address, and taxpayer identification number of each full-time employee during the calendar year and the months, if any, during which that employee (and any dependents) were covered under any such health benefits plans.

If the applicable large employer certifies that it offered to its full-time employees (and their dependents) the opportunity to enroll in minimum essential coverage under an eligible employer-sponsored plan (as defined in section 5000A(f)(2)), section 6056 specifies that the return must also include (1) the length of any waiting period (as defined in section 2701(b)(4) of the Public Health Service Act (42 U.S.C. 300gg(b)(4)) with respect to that coverage,[3] (2) the months during the calendar year for which coverage under the plan was available, (3) the monthly premium for the lowest cost option in each of the enrollment categories under the plan, and (4) the employer's share of the total allowed costs of benefits provided under the plan. Section 6056(b)(2)(F) provides that the return must include such other information as the Secretary may require. See section IX of this preamble for a discussion of the information proposed to be included in these proposed regulations as part of the reporting requirements, as well as additional information that may be required under the applicable forms and instructions, as is typical with regulations on information reporting.

Section 6056(c) requires that every person required to make a return under section 6056(a) furnish to each full-time employee whose name is required to be set forth in the return a written statement showing (1) the name and address of the person required to make that return and the phone number of the information contact for that person, and (2) the information required to be shown

[3] While section 6056(b)(2)(C)(i) refers to the term ''waiting period'' as defined in section 2701(b)(4) of the PHS Act, amendments made by section 1201 of the Affordable Care Act moved this definition from section 2701(b)(4) of the PHS Act to section 2704(b)(4). Separately, section 2708 of the PHS Act prohibits a group health plan and a health insurance issuer offering group health insurance coverage from applying any waiting period that exceeds 90 days. The Affordable Care Act adds section 715(a)(1) to the Employee Retirement Income Security Act (ERISA) and section 9815(a)(1) to the Code to incorporate the provisions of part A of title XXVII of the PHS Act (specifically, PHS Act sections 2701 through 2728) into ERISA and the Code, and to make them applicable to group health plans and health insurance issuers providing health insurance coverage in connection with group health plans.

on the return with respect to that individual. The written statement must be furnished on or before January 31 of the year following the calendar year for which the return under section 6056(a) was required to be made.

As discussed in section IX.B of this preamble, the approach contemplated by these proposed regulations would give effect to these statutory provisions by limiting the information elements listed and other information that would be provided annually to those that are needed by individual taxpayers to accurately complete their tax returns or by the IRS to effectively administer other provisions of the Affordable Care Act. Treasury and the IRS seek comments on ways to achieve these goals efficiently and effectively.

Section 6056(d) provides that to the maximum extent feasible, the Secretary may permit combined reporting under section 6056, section 6051 (employers filing and furnishing Forms W–2, Wage and Tax Statement, with respect to employees) or section 6055, and in the case of an applicable large employer offering health insurance coverage of a health insurance issuer, the employer may enter into an agreement with the issuer to include information required under section 6056 with the return and statement required to be provided by the issuer under section 6055.

Section 6056(e) generally permits governmental units, or any agency or instrumentality thereof, to designate a person to comply with the section 6056 requirements on behalf of the governmental unit, agency or instrumentality.

Under section 6724(d), as amended by the Affordable Care Act, an applicable large employer that fails to comply with the filing and statement furnishing requirements of section 6056 may be subject to penalties for failure to file a correct information return (section 6721) and failure to furnish correct payee statements (section 6722). However, these penalties may be waived if the failure is due to reasonable cause and not to willful neglect (section 6724).

Notice 2012–32 (2012–20 IRB 910) requested public comments on issues to be addressed in regulations under section 6055. Notice 2012–33 (2012–20 IRB 912) requested public comments on issues to be addressed in regulations under section 6056. In developing these proposed regulations and the proposed regulations under section 6055, including the potential further simplified reporting methods described in section XI of this preamble, Treasury and the IRS have considered the written comments submitted in response to these notices and other written comments received.

In addition, consistent with Notice 2013–45, Treasury and the IRS have engaged in further dialogue with stakeholders in an effort to simplify section 6056 and section 6055 reporting consistent with effective implementation of the law. This process has included discussions with stakeholders representing a wide range of interests to assist in the consideration of effective information reporting rules that will be as streamlined, simple, and workable as possible. The effort to develop these proposed information reporting rules has reflected a considered balancing of the importance of (1) providing individuals the information to complete their tax returns accurately, including with respect to the individual responsibility provisions and eligibility for the premium tax credit, (2) minimizing cost and administrative tasks for the reporting entities and individuals, and (3) providing the IRS with information to use for effective and efficient tax administration. As noted elsewhere in this preamble, the proposed regulations will be the subject of public comments, including comments that are specifically invited regarding particular issues identified in the preamble.

Explanation of Provisions and Summary of Comments

VI. Introduction

The Explanation of Provisions that follows (Sections VII through XIII of the preamble) describes the regulatory provisions proposed to implement the statutory reporting provisions described in the Background portion of the preamble. Specifically, this section includes the following:

Section VII	Key Terms
Section VIII	ALE Member Subject to Section 6056 Requirements With Respect to Full-Time Employees
Section IX	General Method—Content, Manner, and Timing of Information Required to be Reported to the IRS and Furnished to Full-Time Employees
Section X	Combined Reporting Under Section 6056 and Section 6051 or 6055
Section XI	Potential Simplified Methods for Section 6056 Information Reporting
Section XII	Person Responsible for Section 6056 Reporting
Section XIII	Applicability of Information Return Requirements

VII. Key Terms

These proposed regulations under section 6056 use a number of terms that are defined in other Code provisions or regulations. For example, section 6056(f) provides that any term used in section 6056 that is also used in section 4980H shall have the same meaning given to the term by section 4980H. Relevant terms include the following:

A. Applicable Large Employer

The proposed regulations provide that the term *applicable large employer* has the same meaning as in section 4980H(c)(2) and any applicable guidance. See proposed § 54.4980H–1(a)(4).

B. ALE Member

All persons treated as a single employer under section 414(b), (c), (m), or (o) are treated as one employer for purposes of determining applicable large employer status.[4] Under the proposed regulations, the section 6056 filing and furnishing requirements are applied separately to each person comprising the applicable large employer consistent with the approach taken in the section 4980H proposed regulations (REG–138006–12 [78 FR 218]) with respect to the determination of any assessable payment under section 4980H. The person or persons that comprise the applicable large employer are referred to as ALE members. The proposed regulations define the term *ALE member* as a person that, together with one or more other persons, is treated as a single employer that is an applicable large employer. For this purpose, if a person, together with one or more other persons, is treated as a single employer that is an applicable large employer on any day of a calendar month, that person is an ALE member

[4] As explained in section 1.A.2 of the preamble to the proposed regulations under section 4980H (REG–138006–12 [78 FR 218]), until further guidance is issued, government entities, churches, and a convention or association of churches may apply a reasonable, good faith interpretation of section 414(b), (c), (m), and (o) in determining whether a person or group of persons is an applicable large employer and whether a particular entity is an applicable large employer member. See proposed § 54.4980H–1(a)(5).

for that calendar month. This definition is the same as the definition provided in the proposed regulations under section 4980H. See § 54.4980H–1(a)(5).

C. Dependent

The proposed regulations provide that the term *dependent* has the same meaning as in section 4980H(a) and (b) and any applicable guidance. See proposed § 54.4980H–1(a)(11).

D. Eligible Employer-Sponsored Plan

The proposed regulations provide that the term *eligible employer-sponsored plan* has the same meaning as in section 5000A(f)(2) and any applicable guidance.

E. Full-time Employee

The proposed regulations provide that the term full-time employee has the same meaning as in section 4980H(c)(4) and any applicable guidance as applied to the determination and calculation of liability under section 4980H(a) and (b) with respect to any individual employee. See proposed § 54.4980H–1(a)(18).

F. Governmental Unit and Agency or Instrumentality of a Governmental Unit

The proposed regulations define the term *governmental unit* as the government of the United States, any State or political subdivision thereof, or any Indian tribal government (as defined in section 7701(a)(40)) or subdivision of an Indian tribal government (as defined in section 7871(d)). The proposed regulations do not define the term *agency or instrumentality of a governmental unit,* but rather reserve on the issue.

G. Minimum Essential Coverage

The proposed regulations provide that the term *minimum essential coverage* has the same meaning as in section 5000A(f)(1) and any applicable guidance.

H. Minimum Value

The proposed regulations provide that the term *minimum value* has the same meaning as in section 36B and any applicable guidance. See proposed § 1.36B–6.

I. Person

The proposed regulations provide that the term *person* has the same meaning as provided in section 7701(a)(1) and the regulations thereunder.

VIII. ALE Member Subject to Section 6056 Requirements With Respect to Full-Time Employees

As discussed earlier in section VII.B of this preamble, an ALE member is any person that is an applicable large employer or a member of an aggregated group (determined under section 414(b), 414(c), 414(m) or 414(o)) that is determined to be an applicable large employer. Under the proposed regulations, the section 6056 filing and statement furnishing requirements apply on a member-by-member basis to each ALE member, even though the determination of whether an entity is an applicable large employer is made at the aggregated group level. For example, if an applicable large employer is comprised of a parent corporation and 10 wholly-owned subsidiary corporations, there are 11 ALE members (the parent corporation and each of the 10 subsidiary corporations). Under the proposed regulations, each ALE member with full-time employees, rather than the group of entities that comprise the applicable large employer, is the entity responsible for filing and furnishing statements with respect to its full-time employees under section 6056. This is consistent with the manner in which any potential assessable payments under section 4980H will be calculated and administered.

Treasury and the IRS understand that ALE members may benefit from the assistance of a third party in preparing these returns, for example a third-party plan administrator or a related ALE member tasked with preparing the returns for all the members of that applicable large employer. For a discussion of how these third parties may help an ALE member fulfill its reporting obligations, see section XII.C of this preamble.

Whether an employee is a full-time employee is determined under section 4980H(c)(4) and any applicable guidance. See proposed §§ 54.4980H–1(a)(18) and 54.4980H–3. This includes any full-time employees who may perform services for multiple ALE members within the applicable large employer.[5] Under the proposed regulations, only ALE members with full-time employees are subject to the filing and statement furnishing requirements of section 6056 (and only with respect to their full-time employees).

Generally, the ALE member providing the section 6056 reporting is the common law employer. Disregarded entities are treated for section 4980H purposes, and therefore for section 6056 purposes, similarly to the way they are treated for employment tax purposes, so that the reporting requirements under section 6056 are imposed on a disregarded entity that is an applicable large employer, and not on its owner.[6]

IX. General Method—Content, Manner, and Timing of Information Required to be Reported to the IRS and Furnished to Full-Time Employees

This section describes the general method for reporting to the IRS and furnishing statements to employees pursuant to section 6056 that is set forth in the proposed regulations. This general method would be available for all employers and with respect to reporting for all employees. Treasury and the IRS are also considering certain simplified reporting methods, such as using codes on Form W–2 to report whether full-time employees, spouses, and their dependents have been offered coverage, which in some cases may be available only with respect to certain groups of employees. In those cases, with respect to those employees for whom the simplified reporting method was not available, the employer would use the general method. In any case, however, the simplified reporting methods under consideration would be optional so that an employer could choose to report for all of its full-time employees using the general method described in these proposed regulations even if a simplified reporting method is available. For a further description of the simplified reporting methods under consideration, see section XI of this preamble.

A. Information Reporting to the IRS

In accordance with section 6056, the proposed regulations provide for every ALE member to file a section 6056 return with respect to its full-time employees. Similar to the separate Form W–2, Wage and Tax Statement, filed by an employer for each employee and the Form W–3, Transmittal of Wage and Tax Statements, filed as a transmittal form for the Forms W–2, the proposed regulations provide that a separate return is required for each full-time employee, accompanied by a single

[5] For example, if an employee performs services for two applicable large employer members within an applicable large employer and the combined hours of service for the two applicable large employer members are sufficient to trigger a reporting obligation under section 6056, each applicable large employer member is required to file and furnish a section 6056 return with respect to services performed by the employee for that applicable large employer member. See proposed § 54.4980H–5(d).

[6] Specifically, the proposed regulations under section 7701 (REG–138006–12 [78 FR 218]) treat the disregarded entity (as defined in § 301.7701–2) as a corporation with respect to the reporting requirements under section 6056. See proposed § 301.7701–2(c)(2)(v)(A)(*5*). These rules would also apply to a qualified subchapter S subsidiary. See proposed § 1.1361–4(a)(8)(i)(E).

transmittal form for all of the returns filed for a given calendar year.

As a general method, the proposed regulations further provide that the section 6056 return may be made by filing Form 1094–C (a transmittal) and Form 1095–C (an employee statement), or other forms the IRS designates. Alternatively, the section 6056 return may be made by filing other form(s) designated by the IRS or a substitute form. Under the proposed regulations, a substitute form must include all of the information required to be reported on Forms 1094–C and 1095–C or other forms the IRS designates and comply with applicable revenue procedures or other published guidance relating to substitute returns. See § 601.601(d)(2). In accordance with usual procedures, these forms will be made available in draft form at a later date.

B. Information Required To Be Reported and Furnished

The proposed regulations provide that every ALE member will report on the section 6056 information return the following information: (1) The name, address, and employer identification number of the ALE member, the name and telephone number of the applicable large employer's contact person, and the calendar year for which the information is reported; (2) a certification as to whether the ALE member offered to its full-time employees (and their dependents) the opportunity to enroll in minimum essential coverage under an eligible employer-sponsored plan (as defined in section 5000A(f)(2)), by calendar month; (3) the number of full-time employees for each month during the calendar year; (4) for each full-time employee, the months during the calendar year for which coverage under the plan was available; (5) for each full-time employee, the employee's share of the lowest cost monthly premium (self-only) for coverage providing minimum value offered to that full-time employee under an eligible employer-sponsored plan, by calendar month; and (6) the name, address, and taxpayer identification number of each full-time employee during the calendar year and the months, if any, during which the employee was covered under an eligible employer-sponsored plan. In addition, the proposed regulations provide, as with other information reporting, that the section 6056 information return may request such other information as the Secretary may prescribe or as may be required by the form or instructions.

As part of the effort to minimize the cost and administrative steps associated with the reporting requirements, Treasury and the IRS have sought to identify any information that would not be relevant to individual taxpayers or the IRS for purposes of administering the premium tax credit and employer shared responsibility provisions or that is already provided at the same time through other means. Specifically, the proposed regulations do not require the reporting of the following four data elements (a more detailed description of the data elements that Treasury and the IRS anticipate will be included is provided later in this section of the preamble).

First, the proposed regulations do not require the reporting of the length of any waiting period, because the length of the waiting period is not relevant for administration of the premium tax credit or employer shared responsibility provisions or for an individual in preparing his or her tax return. However, Treasury and the IRS anticipate that information will be requested, using an indicator code, regarding whether an employee's coverage was not effective during certain months because of a waiting period since this information is relevant to the administration of the employer shared responsibility provisions.

Second, the proposed regulations do not require reporting of the employer's share of the total allowed costs of benefits provided under the plan because this information also is not relevant to the administration of the premium tax credit and the employer shared responsibility provisions. In contrast, whether the employer-sponsored plan provides minimum value coverage is relevant information; accordingly, Treasury and the IRS anticipate that information will be requested, also using an indicator code.

Third, the proposed regulations do not require the reporting of the monthly premium for the lowest-cost option in each of the enrollment categories (such as self-only coverage or family coverage) under the plan. Rather, because only the lowest-cost option of self-only coverage offered under any of the enrollment categories for which the employee is eligible is relevant to the determination of whether coverage is affordable (and thus to the administration of the premium tax credit and employer shared responsibility provisions), that is the only cost information proposed to be requested.

Fourth, the proposed regulations do not require the reporting of the months, if any, during which any of the employee's dependents were covered under the plan. Instead, the proposed regulations require reporting only regarding whether the employee was covered under a plan. This is because information relating to the months during which any of the employee's dependents were covered under the plan will be reported on the section 6055 information return associated with that employee's coverage.

Under the proposed regulations, each ALE member must file and furnish the section 6056 return and employee statement using its EIN. Any ALE member that does not have an EIN may easily apply for one online, by telephone, fax, or mail. See Publication 1635, Employer Identification Number, for further information at *www.irs.gov*.

Having considered the information required by section 6056 and the information needed to verify employer-sponsored coverage and to administer the employer shared responsibility provisions under section 4980H and the premium tax credit, Treasury and the IRS anticipate that as part of the general method for section 6056 reporting, the IRS will need certain information not specifically set forth under section 6056 but authorized under section 6056(b)(2)(F). Accordingly, the proposed regulations provide, in a manner similar to other information reporting guidance, that additional information may be prescribed by guidance, forms, or instructions. Treasury and the IRS are also considering potential simplified reporting methods that in certain situations may permit an employer to provide less information than all data elements required under the general method for reporting. See section XI of this preamble.

Under the general method of section 6056 reporting, the following information is expected to be requested, through the use of indicator codes for some information, as part of the section 6056 return (as well as an indication of how many individual employee statements are being submitted):

(1) Information as to whether the coverage offered to employees and their dependents under an employer-sponsored plan meets minimum value and whether the employee had the opportunity to enroll his or her spouse in the coverage;

(2) the total number of employees, by calendar month;

(3) whether an employee's effective date of coverage was affected by a waiting period;

(4) if the ALE member was not conducting business during any particular month, by month;

(5) if the ALE member expects that it will not be an ALE member the following year;

(6) information regarding whether the ALE member is a person that is a

member of an aggregated group, determined under section 414(b), 414(c), 414(m), or 414(o), and, if applicable, the name and EIN of each employer member of the aggregated group constituting the applicable large employer on any day of the calendar year for which the information is reported;

(7) if an appropriately designated entity is reporting on behalf of an ALE member that is a governmental unit or any agency or instrumentality thereof for purposes of section 6056, the name, address, and identification number of the appropriately designated person;

(8) if an ALE member is a contributing employer to a multiemployer plan, whether a full-time employee is treated as eligible to participate in a multiemployer plan due to the employer's contributions to the multiemployer plan; and

(9) if the administrator of a multiemployer plan is reporting on behalf of the ALE member with respect to the ALE member's full-time employees who are eligible for coverage under the multiemployer plan, the name, address, and identification number of the administrator of the multiemployer plan (in addition to the name, address, and EIN of the ALE member already required under the proposed regulations).

C. Use of Indicator Codes To Provide Information With Respect to a Particular Full-Time Employee

In an effort to simplify and streamline the section 6056 reporting process even under the general section 6056 reporting rules, Treasury and the IRS anticipate that certain of the information described above as applied to a particular full-time employee will be reported to the IRS, and furnished to the full-time employee, through the use of a code rather than by providing specific or detailed information. Specifically, it is contemplated that the following information will be reported with respect to each full-time employee for each calendar month using a code: [7]

(1) minimum essential coverage meeting minimum value was offered to:

a. the employee only;

b. the employee and the employee's dependents only;

c. the employee and the employee's spouse only; or

d. the employee, the employee's spouse and dependents;

(2) coverage was not offered to the employee and:

a. the employee was in a waiting period that complies with the requirements of PHS Act section 2708 and its implementing regulations;

b. the employee was not a full-time employee;

c. the employee was not employed by the ALE member during that month; or

d. no other code or exception applies;

(3) coverage was offered to the employee for the month although the employee was not a full-time employee during that month; and

(4) the ALE member met one of the affordability safe harbors under proposed § 54.4980H–5(e)(2) with respect to the employee.

It is anticipated that if multiple codes apply with respect to a full-time employee for a particular calendar month, the reporting format will accommodate the necessary codes.

D. Section 6056 Statements to Full-Time Employees

Under the general section 6056 reporting rules set forth in the proposed regulations, every ALE member required to file a section 6056 return must furnish a section 6056 employee statement to each of its full-time employees that includes the name, address and EIN of the ALE member and the information required to be shown on the section 6056 return with respect to the full-time employee. The section 6056 employee statement is not required to include a copy of the transmittal form that accompanies the returns. As part of the potential simplified reporting methods Treasury and the IRS are also considering whether, in certain circumstances, other methods of furnishing information to an employee may be sufficient (for example, through the use of a code on the Form W–2). For a detailed description of these potential simplified reporting methods, see section XI of this preamble.

Some employers may wish to have the flexibility to use a substitute type of statement to provide the necessary information to full-time employees. The proposed regulations provide that the section 6056 employee statement may be made by furnishing a copy of the section 6056 return on Form 1095–C (or another form the IRS designates) or a substitute employee statement for that full-time employee. Under the proposed regulations, a substitute statement must include the information required to be shown on the section 6056 return filed with the IRS with respect to that employee and must comply with applicable revenue procedures or other published guidance relating to substitute statements. See § 601.601(d)(2). These proposed regulations provide that section 6056 employee statements filed using Form 1095–C or another form the IRS designates will be included in the proposed IRS truncated TIN program. Under this proposed program, an IRS truncated taxpayer identifying number may be used as the identifying number for an individual in lieu of the identifying number appearing on the corresponding information return filed with the IRS. See the proposed regulations on IRS Truncated Taxpayer Identification Numbers (REG–148873–09 [78 FR 913]).

E. Time for Filing Section 6056 Returns and Furnishing Employee Statements

The proposed regulations provide that section 6056 returns must be filed with the IRS annually, no later than February 28 (March 31 if filed electronically) of the year immediately following the calendar year to which the return relates. This is the same filing schedule applicable to other information returns with which employers are familiar such as Forms W–2 and 1099. Because Notice 2013–45 provided transition relief for section 6056 reporting for 2014, the first section 6056 returns required to be filed are for the 2015 calendar year and must be filed no later than March 1, 2016 (February 28, 2016, being a Sunday), or March 31, 2016, if filed electronically. In addition, the regulations propose that the section 6056 employee statements be furnished annually to full-time employees on or before January 31 of the year immediately following the calendar year to which the employee statements relate. This means that the first section 6056 employee statements (meaning the statements for 2015) must be furnished no later than February 1, 2016 (January 31, 2016, being a Sunday).

In preparation for the application of the section 4980H provisions beginning in 2015, employers are encouraged to voluntarily comply for 2014 (that is, for section 6056 returns and statements filed and furnished in 2015) with the information reporting provisions (once the information reporting rules have been issued) and to maintain or expand health coverage in 2014. Real-world testing of reporting systems and plan designs through voluntary compliance for 2014 will contribute to a smoother transition to full implementation for 2015.

[7] Treasury and the IRS have received comments regarding whether transition relief previously provided in the section 4980H proposed regulations (REG–138006–12 [78 FR 218]) with respect to the transition from 2013 to 2014 will be extended to the transition from 2014 to 2015. The issue is currently under consideration and will be addressed in future guidance under section 4980H. If further transition relief is provided under section 4980H, it is expected that additional indicator codes will be available on the section 6056 return to indicate that an employer is using the transition relief.

Some commenters asked for use of an alternate filing date for employers whose health plan is not a calendar year plan. While Treasury and the IRS understand that employers may collect information on a plan year basis, employees generally will need to receive their section 6056 employee statements early in the calendar year in order to have the requisite information to correctly and completely file their income tax returns reflecting any available premium tax credit. For this reason, the proposed regulations do not adopt this suggestion. However, Treasury and the IRS are considering a simplified reporting method, described in section XI of this preamble, that in certain circumstances could permit the employer to report the required information on the Form W–2 which is already being furnished to an employee on the same schedule.

These proposed regulations do not include rules regarding extensions of the time to file section 6056 returns but this topic is addressed elsewhere. Specifically, the notice of proposed rulemaking under section 6055 (REG–132455–11) includes proposed amendments to the regulations under section 6081 relating to general rules on extensions of time to file to include returns under both sections 6055 and 6056. The final section 6056 regulations are expected to cross-reference the amendments to the regulations under section 6081. These proposed regulations reserve a paragraph for this cross-reference.

F. Manner of Filing of Section 6056 Information Returns and Furnishing of Section 6056 Employee Statements

Treasury and the IRS understand that electronic filing is often easier and more efficient for taxpayers, and several commenters requested that employers be permitted to file section 6056 returns electronically. The proposed regulations require electronic filing of section 6056 information returns except for an ALE member filing fewer than 250 returns during the calendar year. Each section 6056 return for a full-time employee is a separate return. Although an ALE member filing fewer than 250 returns during the calendar year may always choose to make the section 6056 returns on the prescribed paper form, that member is permitted (and encouraged) to file section 6056 returns electronically. This proposed requirement for electronic filing is the same as the current requirements for other information returns.

The proposed regulations provide that all returns are aggregated for the purpose of applying the 250-return threshold so that, for example, an ALE member required to file 150 section 6056 returns and 200 Forms W–2 will be required to electronically file section 6056 returns. A reporting entity must submit the prescribed form(s) to request authorization and obtain a Transmitter Control Code from the IRS to be able to file an information return electronically.

In addition to electronic filing, Treasury and the IRS understand that electronic methods are often a simpler and more efficient method to supply employees with the required information, and several commenters requested that employers be permitted to electronically furnish section 6056 employee statements to full-time employees. In response, the proposed regulations permit electronic furnishing of section 6056 employee statements if certain notice, consent, and hardware or software requirements are met. To provide rules for electronic furnishing with which employers are already familiar, the proposed regulations adopt by analogy the process currently in place for the electronic furnishing of employee statements (that is, Forms W–2) pursuant to section 6051 and applicable regulations.

X. Combined Reporting Under Section 6056 and Section 6051 or 6055

In addition to the reporting under section 6056, two other reporting provisions provide for annual reporting with respect to certain individuals and the furnishing of statements to those individuals. Specifically, section 6051 requires employers to provide Forms W–2 reporting wages paid and taxes withheld. Section 6055 requires information reporting by any person that provides minimum essential coverage to an individual. ALE members that provide minimum essential coverage on a self-insured basis are subject to the reporting requirements of all three sections (6051, 6055 and 6056). Notices 2012–32 and 2012–33 requested comments on how to minimize duplication in reporting under these provisions.

Several commenters recommended that the regulations allow combined information reporting under sections 6055 and 6056 for applicable large employers that sponsor self-insured plans and must report under both sections. Other commenters recommended that employers be permitted to use a single information return to report under sections 6051 (Form W–2) and 6055. Some commenters suggested adding section 6055 or section 6056 reporting to Form W–2.

Because not all employers are subject to each of these three reporting requirements, independent reporting methods under each section need to be available; otherwise, employers subject to only one reporting requirement may have to expend additional effort to use a combined reporting method. Optional combined reporting therefore would require development of multiple forms for each reporting requirement (some forms for combined reporting, other forms for separate reporting), which could create administrative complexity and create confusion for employees.

In addition, any consideration of combined reporting must take into account that sections 6051, 6055 and 6056 apply to different types of entities (subject to the various reporting requirements, which differ among the Code provisions), and require reporting of different types of information. Section 6051 requires reporting of certain wage and wage-related information on an annual basis by all employers for all employees (and only employees). Section 6055 requires reporting of certain health coverage information by various entities (issuers, employers sponsoring self-insured group health plans, and governmental units) only for individuals who are actually covered (and not for individuals who are offered coverage but do not enroll), and multiple covered individuals may be included on one return. Section 6056 requires reporting of information by applicable large employers on offers of coverage that have or have not been made only to full-time employees (whether or not the offer has been accepted). Further, unlike Form W–2 reporting under section 6051, which provides annual information, both sections 6055 and 6056 require reporting some information on a monthly basis. Accordingly, the general section 6056 reporting method under the proposed regulations does not assume overall combined reporting under sections 6051, 6055, and 6056.

However, as described more fully below in section XI of this preamble, Treasury and the IRS are considering whether it may be possible to permit a type of combined reporting under sections 6051 and 6056 by providing an option to use a code on the Form W–2 in certain circumstances to provide information needed by both the employee and the IRS rather than through the use of the section 6056 employee statement (with employer-level information being provided separately). In addition, in other limited circumstances involving no-cost or very low-cost coverage provided under a self-insured group health plan, Treasury and

the IRS are considering whether the employee and the IRS could rely solely on the information provided by the employer on a section 6055 return and the Form W–2 without any further information reporting under section 6056. For further discussion of these potential approaches, see section XI of this preamble.

In response to comments, Treasury and the IRS also have considered suggestions to use, for section 6055 and 6056 reporting purposes, information that employers communicate to employees about employer-sponsored coverage prior to employees' potential enrollment in Exchange coverage. These comments have observed that, under the Affordable Care Act, employers are required to provide pre-enrollment information to employees by various means, including information in the Notice of Coverage Options provided to employees pursuant to the requirements under section 18B of the Fair Labor Standards Act [8] in the Exchanges and potentially via the Employer Coverage Tool developed by the Department of Health and Human Services (HHS) that supports the application for enrollment in a qualified health plan and insurance affordability programs.[9]

Treasury and the IRS have considered and coordinated with the Departments of HHS and Labor regarding the various reporting provisions with a view to identifying ways to make the entire process as effective and efficient as possible for all parties. That said, the various reports are designed for different purposes, and pre-enrollment reporting regarding anticipated employer coverage in an upcoming coverage year is unlikely to be helpful to individual taxpayers in accurately completing their tax returns more than a year later, after the coverage year. Among other issues, the pre-enrollment information may not be readily available to individuals at the time they are filing their tax returns, could be confused with the more recently received pre-enrollment information that applies to the subsequent year (not the year for which the tax return is being filed), and is in a format that does not facilitate easy transfer to the appropriate location on the Federal income tax return.

Notwithstanding these challenges, Treasury and the IRS continue to work with the other Departments and stakeholders to consider approaches that might help minimize cost and administrative complexity and realize efficiencies in the reporting process.

Both sections 6055 and 6056 require employers to furnish to employees information about health care coverage. Solely for the purpose of furnishing information to employees (as opposed to filing with the IRS), Treasury and the IRS are considering whether employers sponsoring self-insured group health plans could fulfill their obligation to furnish an employee statement under both sections 6055 and 6056 through the use of a single substitute statement, within the parameters of the rules provided in revenue procedures or other published guidance relating to substitute returns. See § 601.601(d)(2) of this chapter.

XI. Potential Simplified Methods for Section 6056 Information Reporting

In developing these regulations, Treasury and the IRS have sought to develop simplified reporting methods that will minimize the cost and administrative tasks for employers, consistent with the statutory requirements to file an information return and furnish an employee statement to each full-time employee. Comments have suggested that, at least for some employers, the collection, assembling and processing of the necessary data into an appropriate format for filing may not be necessary if the employer offers sufficient coverage to make it unlikely that the employer will be subject to an assessable payment under section 4980H because the employee will be ineligible for a premium tax credit. Treasury and the IRS have considered these comments in formulating the potential simplified reporting methods described in this section. If Treasury and the IRS adopt one or more of these simplified reporting methods, they would be optional alternatives to the general reporting method set forth in the proposed regulations, which could substantially reduce the data elements reported using the general method. It is anticipated that, if an employer uses one or more of the simplified reporting methods, the employer would indicate on its section 6056 transmittal which simplified reporting method(s) was used and the number of employees for which the particular method was used. Comments are invited on these potential simplified reporting methods and on other possible simplified approaches that would benefit employers while providing sufficient and timely information to individual taxpayers and the IRS.

The information provided to the IRS and the employee pursuant to section 6056 is important for administering the section 4980H shared employer responsibility provisions and the premium tax credit. However, in looking at the potential flow of information, Treasury and the IRS have determined that in some circumstances only some of the information required under the general method is necessary. Treasury and the IRS have attempted to identify the specific groups of employees for whom simplified reporting would provide sufficient information, and simplified reporting approaches for these groups are outlined below. In many situations, not every full-time employee of an employer would fit into the groups of employees for which simplified reporting would be available. In that case, the employer would continue to use the general reporting method in the proposed regulations for those full-time employees for whom the employers could not use a simplified method. However, it is anticipated that a significant number of employers will have a sufficient number of employees that fit into one or more of the categories described below to make use of the simplified reporting method preferable to the general reporting method.

Subsections A through F of this section XI of the preamble describe, and comments are invited on, possible simplified methods of reporting under section 6056. Each of these possible methods would be optional for the reporting employer, and, except where specifically noted, would not affect any reporting obligations under section 6055.

Subsection A	Eliminating Section 6056 Employee Statements in Favor of Form W–2 Reporting for Certain Groups of Employees Offered Coverage.
Subsection B	No Need to Determine Full-Time Employees If Minimum Value Coverage Is Offered to All Potentially Full-Time Employees.

[8] On May 8, 2013, the Department of Labor issued Technical Release 2013–02 providing temporary guidance under Fair Labor Standards Act section 18B, as well as model notices. *See* Technical Release 2013–02, model notice for employers who offer a health plan to some or all employees, and model notice for employers who do not offer a health plan, available at *http://www.dol.gov/ebsa/healthreform/*. Guidance on the Notice to Employees of Coverage.

[9] Available at *https://www.healthcare.gov/downloads/ECT_Application_508_130615.pdf*

Subsection C	Self-Insured Employers Offering Employees, Their Spouses and Dependents Mandatory No-Cost Minimum Value Coverage.
Subsection D	Voluntarily Reporting Section 6056 Elements During or Prior to the Year of Coverage.
Subsection E	Reporting for Employees Potentially Ineligible for the Premium Tax Credit.
Subsection F	Combinations of Simplified Reporting Methods.

A. Eliminating Section 6056 Employee Statements in Favor of Form W–2 Reporting for Certain Groups of Employees Offered Coverage

In response to stakeholder comments, Treasury and the IRS are considering allowing employers in certain circumstances to report offers of minimum value coverage on an employee's Form W–2, instead of reporting the offers to the IRS on a section 6056 employee statement or furnishing a section 6056 employee statement to the employee. The reporting is envisioned as using an existing box on the Form W–2 to provide the monthly dollar amount of the required employee contribution for the lowest cost minimum value self-only coverage offered to the employee and using a letter code to describe the offer of coverage. Specifically, Treasury and the IRS anticipate that this approach could be used for any employee employed by the employer for the entire calendar year when the offer, the individuals to whom the offer is made, and the employee contribution for the lowest-cost option for self-only coverage all remained the same for all twelve months of the calendar year. The letter code could be used to indicate that minimum value coverage was offered to: (1) The employee, the employee's spouse and the employee's dependents, (2) the employee and the employee's dependents but not the employee's spouse; (3) the employee and the employee's spouse but not the employee's dependents; (4) the employee, but not the employee's spouse or the employee's dependents; or that the employee was (5) only offered coverage that was not minimum value coverage; or (6) not offered coverage. For this purpose, an employer is treated as offering coverage to the employee's spouse or dependents even if the employee does not have a spouse or dependent, if the employee could elect such coverage if the employee did have a spouse or dependent. If an employee was not offered coverage, it is anticipated that the dollar amount of the employee share of the lowest-cost employee-only coverage option would be shown as zero.

Example: Employer has 100 full-time employees, all of whom are employed for the entire year. Employer offers all of its full-time employees, spouses and dependents the opportunity to enroll in health care coverage that provides minimum value. Under the potential simplified reporting method, it is contemplated that, for all employees, Employer would be permitted to avoid filing or furnishing section 6056 employee statements if it used a letter code on the Form W–2 to report that an offer of coverage had been made to the employee, the employee's spouse (if any), and the employee's dependents (if any), and a dollar amount indicating the required monthly employee contribution to purchase the lowest cost option offered to the employee for self-only coverage.

Treasury and the IRS are also considering whether this or a similar simplified reporting method could be extended to cases in which the required monthly employee contribution is below a specified threshold. For example, if the annual employee cost of self-only coverage is $800 or less, the employer would be permitted to report zero as the employee cost. The $800 amount is less than 9.5 percent of the federal poverty line for a single individual. Thus, regardless of the size of the employee's household or the level of other income or loss of any member of the employee's household, either the employer's coverage will be affordable for purposes of section 36B(c)(2)(C)(i) or the employee's household income will be less than 100 percent of the federal poverty line and the employee will not be an applicable taxpayer under section 36B(c)(2) who is eligible for the credit. In addition, even if other income increases the employee's household income, the employee would not be entitled to the affordability exemption to the shared responsibility payment under section 5000A(e)(1) because the $800 amount would not exceed 8 percent of the employee's household income. Alternatively, if other losses reduce the employee's household income below the income tax filing threshold, the employee will qualify for the exemption under section 5000A(e)(2), and the information otherwise reported under section 6056 would not be required to determine whether the employee satisfied section 5000A. Comments are also requested on the extent to which this approach could reasonably be combined with the other simplified reporting methods described in this section XI of the preamble.

An employer that decides to use this simplified reporting method would not be required to file or furnish a section 6056 employee statement with respect to the employees for whom this method was used. Instead, the employer would simply indicate on a section 6056 transmittal that it had chosen to use this method. If the Form W–2 for an employee used an EIN other than the employer's EIN (for example, a third-party payor treated as an employer under section 3401(d)(1) of the Code filed the Form W–2), the employer (that is, the ALE member) may be required as part of the 6056 transmittal to identify those employees for whom a third party reported on Form W–2 without the employer's EIN and to list the employees' social security numbers.

Stakeholders have inquired whether a similar optional Form W–2 reporting method could be used for employees offered coverage under their employer's plan for less than a full calendar year (for example for a new employee hired during the year), but offered no coverage for the remainder of the year. Treasury and the IRS note that this type of reporting would leave gaps in information that would otherwise be used for tax administration purposes. For example, the reporting would not provide any information regarding the particular calendar months during which coverage was offered (or not offered). Even if the employer represented that the coverage was offered during all periods of employment, the reporting would not be able to be reconciled, for example, with another Form W–2 received by the employee from another employer using the same reporting method. That is because while both employers would report the number of months coverage was offered, that information would not be sufficient to determine whether offers of coverage were overlapping (because the employee was employed simultaneously at both employers).

Additionally, for months for which coverage was not offered, information as to whether the employee was employed and also the reason coverage was not offered during certain months of the calendar year would not be captured (for example, the employee was in a waiting period or employed but not as a full-time employee). The specific reason coverage was not offered is relevant to the administration of the employer shared responsibility provisions since the failure to offer coverage for certain reasons does not result in an assessable payment under

the employer shared responsibility provisions for a calendar month, even if the full-time employee receives a premium tax credit for that month. Comments are requested on whether this approach to reporting would be useful for employers and, if so, on possible ways to address issues concerning the information gaps that would exist in reporting on employees offered coverage for less than a full calendar year.

B. No Need To Determine Full-Time Employees If Minimum Value Coverage Is Offered to All Potentially Full-Time Employees

Treasury and the IRS understand that some employers offer coverage to all or nearly all of their employees, and are able to accurately represent that the only employees not offered coverage are not full-time employees. In that case, the employer will have determined that it would not owe an assessable payment under section 4980H(a) because it would have made an offer of coverage to all of its full-time employees. However, the employer might not have determined whether every employee to whom coverage is offered is or is not a full-time employee. Treasury and the IRS are considering whether these employers may provide section 6056 reporting that does not identify the number of full-time employees and that does not specify whether a particular employee offered coverage is a full-time employee, provided that the employer certifies that all of its employees to whom it did not offer coverage during the calendar year were not full-time employees (or were otherwise ineligible for coverage, for example because they were in the initial permitted waiting period following the date of hire). This method would permit the employer to forgo identifying the full-time status of its employees prior to filing a section 6056 return. However, if an employee who was offered coverage claimed a premium tax credit, the employer could be asked to confirm at a later date (after the filing of the section 6056 return and the relevant Form 1040 return) whether that employee was a full-time employee during that calendar year (in the same manner that an employer reporting only on behalf of full-time employees might later be asked about the status of an employee claiming the premium tax credit if the employee was not listed on that employer's section 6056 return). Treasury and the IRS recognize that this method often would result in over-reporting of certain elements in the sense that reporting would occur with respect to one or more employees who may not be full-time employees during the calendar year. But some employers have indicated that they anticipate relatively few of their employees will claim the premium tax credit, and that determining those few employees' status as full-time employees later would be administratively easier than determining the full-time employee status of all employees at the time of the initial filing.

Example: Employer has 100 employees. Employer makes an offer of minimum value coverage to 90 of the employees. Employer has determined that the ten employees to whom coverage is not offered are not full-time employees for any calendar month during the year. Employer has not determined which of the remaining 90 employees were full-time employees for one or more calendar months during the year. Employer certifies as part of its section 6056 transmittal return that the only employees to whom it did not offer coverage were not full-time employees or were otherwise not required to be offered coverage for all months of employment (for example, a full-time employee was hired in November and, under the terms of the plan, which comply with the Affordable Care Act, would not be initially offered coverage until the following calendar year). Employer would file a section 6056 return and furnish an employee statement for each of the 90 employees, but would not be required to report either the total number of full-time employees for the year or whether any particular employee was a full-time employee for any calendar month during the year. If one of the employees included as part of the return declined the offer of coverage and properly claimed a premium tax credit with respect to coverage provided through an Exchange, and the employer were contacted by the IRS to determine whether the employer did or did not owe an assessable payment under section 4980H(b), the employer could determine at that point whether the employee was a full-time employee for one or more months during that calendar year and supply that information to the IRS.

C. Self-Insured Employers Offering Employees, Their Spouses, and Dependents Mandatory No-Cost Minimum Value Coverage

Some employers may provide mandatory minimum value coverage under a self-insured group health plan to an employee, an employee's spouse, and an employee's dependents, with no employee contribution. In that case, none of those individuals would be eligible for a premium tax credit for any month during which the coverage was provided, and the employer would indicate on the return required under section 6055 for the employee all months for which that coverage was provided with respect to each individual in the employee's family. Because the section 6055 return would provide the individual taxpayers the necessary information to accurately file the taxpayers' income tax returns, and would provide the IRS the information concerning those employees to administer the premium tax credit and employer shared responsibility provisions, Treasury and the IRS are considering whether for those employees the employer could file and furnish only the return required under section 6055, a code on the Form W–2, the summary information provided in the section 6056 transmittal form, and no further information reporting under section 6056.

D. Voluntarily Reporting Section 6056 Elements During or Prior to the Year of Coverage

Some employers have expressed an interest in voluntarily reporting information about the coverage they offer their employees prior to the end of a coverage year, for example at their open enrollment or before the open enrollment at the Exchanges, on the theory that earlier section 6056 reporting to the IRS could lead to greater efficiency in the employer verification system employed by Exchanges to determine eligibility for premium tax credits. Under such an arrangement, they believe that if some employers chose to provide part of their section 6056 reporting to the IRS earlier in the process, the IRS, in turn, would be able to transmit any pertinent data to the Exchanges.

A proposal of this kind would need to address a number of issues. First, the regulations under section 6103 do not authorize the IRS to share taxpayer information in this manner. Even if this information sharing were permitted, information reporting plays a role in enabling individuals to file complete and accurate tax returns. Under the proposal, individuals would not receive the information for their tax return preparation proximate to when they are completing their tax returns. Employees may bear less burden and prepare more accurate tax returns when their employer furnishes a statement at the start of the relevant tax season reflecting all the information the employee needs to file a correct tax return for the prior year. Gaps in complete and timely information increase the need for additional follow-up communication among employers, employees, and the IRS.

Also, offering two sets of reporting alternatives with filing occurring at different time periods would present challenges. Because the reporting options would be voluntary, different reporting protocols and regimes would need to be established and would need

to accommodate employer choices to change the method of reporting from year to year. The multiple forms, procedures, and protocols could create complexity and be difficult to administer.

In addition, the information about the offer of coverage made before the year starts may change during the calendar year. For example, during the year, an employee may be hired or may terminate employment, a part-time employee may become full-time and be eligible for different coverage options, or an employee may change positions during the year and no longer be offered coverage. Accordingly, disclosure before the coverage year does not adequately substitute for disclosure to employees and reporting to the IRS after the coverage year.

Employers, employees, and the IRS share the goal of aligning eligibility for advance payments of premium tax credits as closely as possible with eligibility for the premium tax credit on the employee's annual tax return filed after the coverage year. This would reduce confusion and minimize the risk of employees owing advance payments back as liabilities on their tax returns. Regardless of the final rules on section 6056 information reporting, employers are encouraged to make their pre-enrollment disclosures to employees and Exchanges as effective and helpful to individuals as possible.

Comments are invited on whether there could be a way to design such a voluntary partial early reporting arrangement that would reduce complexity and avoid confusion for employers and employees, be administrable for the IRS, and provide timely information to individuals so that they can meet their income tax filing obligation without undue burden or undue risk of inaccuracy.

E. Reporting for Employees Potentially Ineligible for the Premium Tax Credit

Some employers have indicated that, because many of their employees are relatively highly paid, they are unlikely to be eligible for a premium tax credit. The assumption is that the employee's household income is likely to exceed 400 percent of the Federal poverty line, and therefore the employee would not benefit from receiving the information otherwise included with a section 6056 employee statement. Further, because the employee is unlikely to qualify for a premium tax credit, employers have stated that the information will not be useful to the IRS in administering the employer shared responsibility provisions because the precondition of a section 4980H(b) assessable payment—that the employee receive a premium tax credit—is unlikely to be satisfied.

Treasury and the IRS have considered this request and welcome comments both on its potential usefulness to employers and its administrability. Employers would still need to report to the IRS the months during which the employee was a full-time employee, at least to the extent the employee being was included in a full-time employee count. Additionally, employers will not be in a position to know the correlation between an employee's Form W–2 wages and household income with sufficient accuracy to determine whether an employee may be eligible for the premium tax credit. The only pertinent information the employer retains is the employee's annual wages, yet the poverty level from which the premium tax credit income threshold is determined varies considerably based on family size (which employers will not necessarily know). In addition, employees for whom an employer may use an affordability safe harbor based on wages for purposes of compliance with the employer shared responsibility provisions under section 4980H might still be eligible for a premium tax credit based on their household income. Employers generally do not know employees' household income, and will not have information as to whether the employee (or another member of the employee's household) has incurred losses or expenses (such as alimony, casualty losses, Schedule C business deductions, and the like) that reduce the employee's household modified adjusted gross income below 400 percent of the Federal poverty line. Accordingly, it is unclear whether Form W–2 wages alone would provide sufficient information to determine eligibility for the premium tax credit because the employee's household income may be well below the employee's Form W–2 wages. Comments are requested as to whether there is a level of Form W–2 wages at which such a determination might be made with sufficient confidence, and whether that level of wages is so high as not to be of practical use to employers.

F. Combinations of Simplified Reporting Methods

The potential simplified reporting methods described above would apply to particular groups of employees that in many cases would not overlap. In such cases, two different potential simplified reporting methods could not be applied to the same employee. Treasury and the IRS anticipate that, to the extent any of these potential reporting methods are adopted in final regulations or other administrative guidance, including forms and instructions, an employer would be permitted to use different simplified methods for different employees at the employer's election.

XII. Person Responsible for Section 6056 Reporting

Under the proposed regulations, in general, each ALE member must file a section 6056 return with respect to its full-time employees for a calendar year.

A. Special Rules for Governmental Units: Designation

In accordance with section 6056(e), the proposed regulations provide that in the case of any ALE member that is a governmental unit or any agency or instrumentality thereof (together referred to in this preamble as a governmental unit), that governmental unit may report under section 6056 on its own behalf or may appropriately designate another person or persons to report on its behalf.[10] For purposes of designation, another person is appropriately designated for purposes of the filing and furnishing requirements of section 6056 if that other person is part of or related to the same governmental unit as the ALE member. For example, a political subdivision of a state may designate the state, another political subdivision of the state, or an agency or instrumentality of the foregoing as the designated person for purposes of section 6056 reporting. The person designated might be the governmental unit that operates the relevant health plan or the governmental unit that does other information reporting on behalf of the designating governmental unit. Further, the governmental unit may designate more than one governmental unit to file and furnish under section 6056 on its behalf, such as, for example, if different categories of employees are offered coverage under different health plans operated by different governmental units. In addition, a governmental unit may designate another person to file and furnish with respect to all or some of its full-time employees. If the designation is accepted by the designee and is made before the filing deadline, the designated governmental unit is the designated entity responsible for section 6056 reporting.

[10] Until further guidance is issued, government entities, churches, and a convention or association of churches may apply a reasonable, good faith interpretation of section 414(b), (c), (m), and (o) in determining whether a person or group of persons is an applicable large employer.

The person (or persons) appropriately designated for this purpose would report under section 6056 on behalf of the ALE member. Accordingly, the person (or persons) appropriately designated is (are) the person(s) responsible for section 6056 reporting on behalf of the ALE member and subject to the penalties for failure to comply with information return requirements under sections 6721 and 6722. However, the ALE member remains subject to the requirements of section 4980H.

Under the proposed regulations, a separate section 6056 return and transmittal must be filed for each ALE member for which the appropriately designated person is reporting. The designated entity must report its name, address, and EIN on the section 6056 return to indicate it is the appropriately designated person.

The proposed regulations further provide that the designation under section 6056(e) must be in writing and must contain certain language. Specifically, under the proposed regulations, the designation must be signed by both the ALE member and the designated person, and must be effective under all applicable laws. The proposed regulations also require that the designation set forth the name and EIN of the designated person, and appoint that person as the person responsible for reporting under section 6056 on behalf of the ALE member. The designation must contain information identifying the category of full-time employees (which may be full-time employees eligible for a specified health plan, or in a particular job category, provided that the specific employees covered by the designation can be identified) for which the designated person is responsible for reporting under section 6056 on behalf of the ALE member. If the designated person is responsible for reporting under section 6056 for all full-time employees of an ALE member, the designation should so indicate.

The designation must also contain language that the designated person agrees that it is the appropriately designated person under section 6056(e), and an acknowledgement that the designated person is responsible for reporting under section 6056 on behalf of the ALE member and subject to the requirements of section 6056, and the information reporting penalty provisions of sections 6721 and 6722. The designation must also set forth the name and EIN of the ALE member, identifying the ALE member as the person subject to the requirements of section 4980H. The proposed regulations provide that an equivalent applicable statutory or regulatory designation containing similar language will be treated as a written designation for purposes of section 6056(e).

B. ALE Members Participating in Multiemployer Plans

Several commenters suggested that administrators of multiemployer plans may be willing to file section 6056 returns reporting information for coverage offered to full-time employees under the multiemployer plan and recommended in such cases that an ALE member not be required to report coverage information for those employees.

Treasury and the IRS understand that the plan administrator of a multiemployer plan may have better access than a participating employer to certain information on participating employees required to be included as part of section 6056 reporting. For this reason, Treasury and the IRS anticipate that the section 6056 reporting with respect to full-time employees eligible to participate in a multiemployer plan will be permitted to be provided in a bifurcated manner. Under the bifurcated approach, one return would pertain to the full-time employees eligible to participate in the multiemployer plan (or, if the employer participates in more than one multiemployer plan, one return for each relevant multiemployer plan in which full-time employees are eligible to participate), and another return would pertain to the remaining full-time employees (those who are not eligible to participate in a multiemployer plan). As in the case of other third parties, as discussed in section XII.C of this preamble, the administrator (or administrators, in the case of an employer contributing to two or more multiemployer plans) of a multiemployer plan is permitted to report on behalf of an ALE member that is a contributing employer, and is permitted to report with respect to the ALE member's full-time employees who are eligible for coverage under the multiemployer plan (but not with respect to any other full-time employees of the ALE member). The administrator of the multiemployer plan would file a separate section 6056 return for any ALE member that is a contributing employer on behalf of whom it files using the ALE member's EIN. The administrator of the multiemployer plan would also provide its own name, address, and identification number (in addition to the name, address, and EIN of the ALE member already required). The ALE member would remain the responsible person under section 6056 with respect to all of its full-time employees and accordingly would be required to sign the section 6056 return filed on its behalf and be subject to any potential liability for failure to properly file returns or furnish statements. To the extent the plan administrator that prepares returns or statements required under section 6056 is a tax return preparer, it will be subject to the requirements generally applicable to return preparers.

C. Section 6056 Reporting Facilitated by Third Parties

Treasury and the IRS understand that third party administrators or other third party service providers are integral to the operation of many employers' health plans, including with respect to compliance with any reporting requirements. As requested by several commenters, ALE members are permitted to contract with and use third parties to facilitate filing returns and furnishing employee statements to comply with section 6056. The proposed regulations make clear, however, that ALE members are responsible for reporting under section 6056, with the exception of certain governmental unit applicable large employers that properly designate under section 6056(e). While the proposed regulations do not provide guidance on contractual or other reporting arrangements between private ALE members and other parties, they do not prohibit these arrangements. Such contractual arrangements would not transfer the potential liability of the ALE member for failure to report and furnish under section 6056 and the regulations, or the ALE member's potential liability under section 4980H.

As one example, an applicable large employer that is a member of an aggregated group of related entities (determined under section 414(b), 414(c), 414(m) or 414(o)), may file returns and furnish employee statements on behalf of one or more of the other ALE members of the aggregated group. Each other ALE member of the group, for example, could have the ALE member that operates the employer-sponsored plan file section 6056 returns and furnish section 6056 employee statements on its behalf. However, a separate section 6056 return must be filed for each ALE member, providing that ALE member's EIN. Each ALE member in the aggregated group would continue to be the responsible person under section 6056, would be required to sign the return filed on its behalf, and would be subject to any potential liability for failure to properly file returns or furnish statements. To the extent the other party

that prepares returns or statements required under section 6056 is a tax return preparer, it will be subject to the requirements generally applicable to return preparers.

XIII. Applicability of Information Return Requirements

The proposed regulations provide that an ALE member that fails to comply with the section 6056 information return and employee statement requirements may be subject to the general reporting penalty provisions under sections 6721 (failure to file correct information returns), and 6722 (failure to furnish correct payee statement). The proposed regulations also provide, however, that the waiver of penalty and special rules under section 6724 and the applicable regulations, including abatement of information return penalties for reasonable cause, apply. The proposed regulations under section 6055 (REG–132455–11) include proposed amendments to the regulations under sections 6721 and 6722 to include returns under both sections 6055 and 6056 in the definitions of information return and payee statement. Treasury and the IRS anticipate that the final regulations under section 6056 will cross-reference those amendments to the regulations under sections 6721 and 6722.

Proposed Effective/Applicability Dates

These regulations are proposed to be effective the date the final regulations are published in the **Federal Register**. These regulations are proposed to apply for calendar years beginning after December 31, 2014. Consistent with Notice 2013–45, reporting entities will not be subject to penalties for failure to comply with the section 6506 information reporting provisions for 2014 (including the furnishing of employee statements in 2015). Accordingly, a reporting entity will not be subject to penalties if it first reports beginning in 2016 for 2015 (including the furnishing of employee statements). Taxpayers are encouraged, however, to voluntarily comply with section 6056 information reporting for 2014 by using the general reporting method set forth in these regulations once finalized.

Special Analyses

It has been determined that this notice of proposed rulemaking is not a significant regulatory action as defined in Executive Order 12866, as supplemented by Executive Order 13563. Therefore, a regulatory assessment is not required. It has also been determined that section 553(b) of the Administrative Procedure Act (5 U.S.C. chapter 5) does not apply to these regulations.

It is hereby certified that these regulations will not have a significant economic impact on a substantial number of small entities. This certification is based on the fact that the regulations are consistent with the requirements imposed by section 6056. Consistent with the statute, the regulations require applicable large employers, as defined in section 4980H(c)(2), to file a return with the IRS, using either the prescribed form or a substitute form, for each full-time employee reporting certain information regarding the health care coverage offered and provided to the employee for the year. Consistent with the statute, the proposed regulations further require applicable large employers to furnish to each full-time employee a copy of the return, or a substitute statement, required to be filed by the applicable large employer with respect to the employee. Accordingly, these regulations merely prescribe the method of filing and furnishing returns and employee statements as required under section 6056. Moreover, the proposed regulations attempt to minimize the burden associated with this collection of information by requiring that applicable large employers file and furnish only information that the IRS will utilize to administer the shared employer responsibility provisions under section 4980H and administer the premium tax credit under section 36B, and information employees will need in order to complete their tax returns.

Based on these facts, a Regulatory Flexibility Analysis under the Regulatory Flexibility Act (5 U.S.C. chapter 6) is not required.

Pursuant to section 7805(f) of the Code, this notice of proposed rulemaking has been submitted to the Chief Counsel for Advocacy of the Small Business Administration for comment on its impact on small business.

Comments and a Public Hearing

Before these proposed regulations are adopted as final regulations, consideration will be given to any written comments (a signed original and eight (8) copies) or electronic comments that are submitted timely to the IRS as prescribed in this preamble under the **ADDRESSES** heading. Treasury and the IRS specifically request comments on the clarity of the proposed rules and how they can be made easier to understand. All comments will be available for public inspection at *www.regulations.gov* or upon request. A public hearing has been scheduled for November 18, 2013, in the Auditorium, Internal Revenue Building, 1111 Constitution Avenue NW., Washington, DC. Due to building security procedures, visitors must enter at the Constitution Avenue entrance. In addition, all visitors must present photo identification to enter the building. Because of access restrictions, visitors will not be admitted beyond the immediate entrance area more than 30 minutes before the hearing starts. For information about having your name placed on the building access list to attend the hearing, see the **FOR FURTHER INFORMATION CONTACT** section of this preamble.

The rules of 26 CFR 601.601(a)(3) apply to the hearing. Persons who wish to present oral comments at the hearing must submit written or electronic comments by November 8, 2013 and an outline of the topics to be discussed and the time to be devoted to each topic (signed original and eight (8) copies) by November 8, 2013.

A period of 10 minutes will be allotted to each person for making comments. An agenda showing the scheduling of the speakers will be prepared after the deadline for receiving outlines has passed. Copies of the agenda will be available free of charge at the hearing.

Drafting Information

The principal author of these proposed regulations is Ligeia M. Donis of the Office of the Division Counsel/Associate Chief Counsel (Tax Exempt and Government Entities). However, other personnel from the IRS and Treasury participated in their development.

List of Subjects in 26 CFR Part 301

Employment taxes, Estate taxes, Excise taxes, Gift taxes, Income taxes, Penalties, Reporting and recordkeeping requirements.

Proposed Amendments to the Regulations

Accordingly, 26 CFR part 301 is proposed to be amended as follows:

PART 301—PROCEDURE AND ADMINISTRATION

■ **Paragraph 1.** The authority citation for part 301 continues to read in part as follows:

Authority: 26 U.S.C. 7805 * * *

■ **Par. 2.** Section 301.6011–9 is added to read as follows:

§ 301.6011–9 Electronic filing of section 6056 returns.

(a) *Returns required under section 6056.* An applicable large employer member, as defined in § 301.6056–1(b)(2), is required to file electronically an information return under section 6056 and § 301.6056–1, except as otherwise provided in paragraph (b) of this section.

(b) *Exceptions*—(1) *Low-volume filers/250-return threshold*—(i) *In general.* An applicable large employer member will not be required to file electronically the section 6056 information return described in paragraph (a) of this section unless it is required to file 250 or more returns during the calendar year. Each section 6056 information return for a full-time employee is a separate return. For purposes of this section, an applicable large employer member is required to file at least 250 returns if, during the calendar year, the applicable large employer member is required to file at least 250 returns of any type, including information returns (for example, Forms W–2, Forms 1099), income tax returns, employment tax returns, and excise tax returns. An applicable large employer member filing fewer than 250 returns during the calendar year may make the returns on the prescribed paper form.

(ii) *Examples.* The following examples illustrate the provisions of paragraph (b)(1) of this section:

Example 1. Company X is an applicable large employer member. For the calendar year ending December 31, 2015, Company X is required to file 275 section 6056 returns. Company X is required to file section 6056 returns electronically for that calendar year because 275 section 6056 information returns exceed the 250-return threshold.

Example 2. Company Y is an applicable large employer member. For the calendar year ending December 31, 2015, Company Y is required to file 200 returns on Form W–2 and 150 section 6056 returns. Company Y is required to file the section 6056 returns electronically for that calendar year because it is required to file more than 250 returns (that is, the 200 Forms W–2 plus the 150 section 6056 returns).

(2) *Waiver*—(i) *In general.* The Commissioner may waive the requirements of this section if hardship is shown in a request for waiver filed in accordance with this paragraph (b)(2)(i). The principal factor in determining hardship will be the amount, if any, by which the cost of filing the section 6056 returns in accordance with this section exceeds the costs of filing the returns on other media. A request for waiver must be made in accordance with applicable revenue procedures or publications (see § 601.601(d)(2)(ii)(*b*) of this chapter). Pursuant to these procedures, a request for waiver should be filed at least 45 days before the due date of the section 6056 return in order for the IRS to have adequate time to respond to the request for waiver. The waiver will specify the type of information return (that is, section 6056 information return) and the period to which it applies and will be subject to such terms and conditions regarding the method of reporting as may be prescribed by the Commissioner.

(ii) *Supplemental rules.* The Commissioner may prescribe rules that supplement the provisions of paragraph (b)(2)(i) of this section.

(c) *Effective/applicability date.* The rules of this section are effective as of the date of publication of the Treasury decision adopting these rules as final regulations in the **Federal Register**. This section applies to returns on ''Form 1095–C'' or another form the IRS designates required to be filed after December 31, 2014. However, reporting entities will not be subject to penalties under sections 6721 or 6722 with respect to the reporting requirements for 2014 (for information returns filed and for statements furnished to employees in 2015).

■ **Par. 3.** Section 301.6056–1 is added to read as follows:

§ 301.6056–1 Rules relating to reporting by applicable large employers on health insurance coverage offered under employer-sponsored plans.

(a) *In general.* Section 6056 requires an applicable large employer subject to the requirements of section 4980H to report certain health insurance coverage information to the Internal Revenue Service, and to furnish certain related employee statements to its full-time employees. Paragraph (b) of this section contains definitions for purposes of this section. Paragraph (c) of this section prescribes general rules for filing the required information with the IRS and furnishing the required employee statements to employees. Paragraphs (d) and (e) of this section describe the information required to be reported on a section 6056 information return and the time and place for filing. Paragraph (f) of this section sets forth the mandatory electronic filing requirements for applicable large employer members. Paragraph (g) of this section provides information about the statement required to be furnished to a full-time employee. Paragraph (h) of this section prescribes the time and manner of furnishing the statement, including extensions of time to furnish. Paragraph (i) of this section prescribes the method for correcting information included in a statement required by section 6056(d) that has been furnished to an employee. Paragraph (j) of this section describes the information return requirements applicable to section 6056 returns. Paragraph (k) of this section describes special rules for certain applicable large employers.

(b) *Definitions*—(1) *Applicable large employer.* The term *applicable large employer* has the same meaning as in section 4980H(c)(2) and any applicable regulations.

(2) *Applicable large employer member.* The term *applicable large employer member* means a person that, together with one or more other persons, is treated as a single employer that is an applicable large employer. For this purpose, if a person, together with one or more other persons, is treated as a single employer that is an applicable large employer on any day of a calendar month, that person is an applicable large employer member for that calendar month. If the applicable large employer comprises one person, that one person is the applicable large employer member. An applicable large employer member does not include a person that is not an employer or only an employer of employees with no hours of service for the calendar year.

(3) *Dependent.* The term *dependent* has the same meaning as in section 4980H(a) and (b) and any applicable regulations.

(4) *Eligible employer-sponsored plan.* The term *eligible employer-sponsored plan* has the same meaning as in section 5000A(f)(2) and any applicable regulations.

(5) *Full-time employee.* The term *full-time employee* has the same meaning as in section 4980H and any applicable regulations, as applied to the determination and calculation of liability under section 4980H(a) and (b) with respect to any individual employee, and not as applied to the determination of status as an applicable large employer, if different.

(6) *Governmental unit.* The term *governmental unit* refers to the government of the United States, any State or political subdivision thereof, or any Indian tribal government (as defined in section 7701(a)(40)) or subdivision of an Indian tribal government (as defined in section 7871(d)).

(7) *Agency or instrumentality of a governmental unit.* [Reserved]

(8) *Minimum essential coverage.* The term *minimum essential coverage* has the same meaning as in section 5000A(f)(1) and any applicable regulations.

(9) *Minimum value.* The term *minimum value* has the same meaning

as in section 36B and any applicable regulations.

(10) *Person.* The term *person* has the same meaning as in section 7701(a)(1) and applicable regulations.

(c) *Content and timing of reporting by applicable large employers.* Each applicable large employer member required to make a return and furnish a related statement to its full-time employees under section 6056 for a calendar year must make a return and furnish the related statement using such form(s) as may be prescribed by the Internal Revenue Service. An applicable large employer member will satisfy its reporting requirements under section 6056 if it files with the Internal Revenue Service a return for each full-time employee using Form 1095–C or another form the IRS designates, and a transmittal form using Form 1094–C or another form the IRS designates, as prescribed in this section and in the instructions to the forms.

(d) *Information required to be reported to the Internal Revenue Service*—(1) *In general.* Every applicable large employer member must make a section 6056 information return with respect to each full-time employee. Each section 6056 information return must show—

(i) The name, address, and employer identification number of the applicable large employer member,

(ii) The name and telephone number of the applicable large employer's contact person,

(iii) The calendar year for which the information is reported,

(iv) A certification as to whether the applicable large employer member offered to its full-time employees (and their dependents) the opportunity to enroll in minimum essential coverage under an eligible employer-sponsored plan (as defined in section 5000A(f)(2)), by calendar month,

(v) The months during the calendar year for which coverage under the plan was available,

(vi) Each full-time employee's share of the lowest cost monthly premium (self-only) for coverage providing minimum value offered to that full-time employee under an eligible employer-sponsored plan, by calendar month;

(vii) The number of full-time employees for each month during the calendar year,

(viii) The name, address, and taxpayer identification number of each full-time employee during the calendar year and the months, if any, during which the employee was covered under the plan, and

(ix) Such other information as the Secretary may prescribe or as may be required by the form or instructions.

(2) *Form of the return.* A return required under this paragraph (d) may be made on Forms 1094–C and 1095–C or other form(s) designated by the Internal Revenue Service, or a substitute form. A substitute form must include the information required to be reported on Forms 1094–C and 1095–C and must comply with applicable revenue procedures or other published guidance relating to substitute statements. See § 601.601(d)(2) of this chapter.

(e) *Time and place for filing return*—(1) *In general.* An applicable large employer member must file each return and transmittal form required under paragraph (d)(2) of this section on or before February 28 (March 31 if filed electronically) of the year succeeding the calendar year to which it relates in accordance with any applicable guidance and the instructions to the form. An applicable large employer member must file the return and transmittal form at the address specified on the return form or its instructions.

(2) *Extensions of time for filing.* [Reserved]

(f) *Electronic filing of returns.* The section 6056 return is required to be filed electronically, except as otherwise provided in § 301.6011–9.

(g) *Statements required to be furnished to full-time employees*—(1) *In general.* Every applicable large employer member required to file a return under section 6056 must furnish to each of its full-time employees identified on the return a written statement showing—

(i) The name, address and employer identification number of the applicable large employer member, and

(ii) The information required to be shown on the section 6056 return with respect to the full-time employee.

(2) *Form of the statement.* A statement required under this paragraph (g) may be made either by furnishing to the full-time employee a copy of Form 1095–C or another form the IRS designates as prescribed in this section and in the instructions to such forms, or a substitute statement. A substitute statement must include the information required to be shown on Form 1095–C or another form the IRS designates and must comply with applicable revenue procedures or other published guidance relating to substitute statements. See § 601.601(d)(2). An Internal Revenue Service truncated taxpayer identification number may be used as the identifying number for an individual in lieu of the identifying number appearing on the corresponding information return filed with the Internal Revenue Service.

(h) *Time and manner for furnishing statements*—(1) Each statement required by this section for a calendar year must be furnished to a full-time employee on or before January 31 of the year succeeding that calendar year in accordance with applicable Internal Revenue Service procedures and instructions or as provided in § 301.6056–2.

(2) *Extensions of time*—(i) *In general.* For good cause upon written application of the person required to furnish statements under this section, the Internal Revenue Service may grant an extension of time not exceeding 30 days in which to furnish such statements. The application must be addressed to the Internal Revenue Service, and must contain a full recital of the reasons for requesting the extension to aid the Internal Revenue Service in determining the period of the extension, if any, that will be granted. Such a request in the form of a letter to the Internal Revenue Service, signed by the applicant, will suffice as an application. The application must be filed on or before the date prescribed in paragraph (h)(1) of this section.

(ii) *Automatic extension of time.* The Commissioner may, in appropriate cases, prescribe additional guidance or procedures, published in the Internal Revenue Bulletin (see § 601.601(d)(2)(ii)(*b*)), for automatic extensions of time to furnish to one or more full-time employees the statement required under section 6056.

(i) *Correction of information return.* If the information reported on a return required pursuant to section 6056 for a full-time employee for a prior year was incomplete or incorrect, a corrected return accompanied by a transmittal form must be filed with the Internal Revenue Service as soon as possible after the correction is made. The return must be identified as corrected. A copy of the corrected return for the prior year reflecting the correct data must be furnished to the employee as soon as possible after the correction is made.

(j) *Information reporting penalties.* Section 6724(d)(1)(B)(xxv) and (d)(2)(HH) provides that for purposes of Subtitle F, Chapter 68, Subchapter B, Part II (sections 6721 et seq.), the terms *information return* and *payee statement* include the return required under section 6056 and the statement required to be furnished under section 6056(c). An applicable large employer member who fails to comply with the filing and statement requirements under section 6056 is subject to the penalties under sections 6721 (failure to file correct

information returns) and 6722 (failure to furnish correct payee statement), and the waiver and special rules provisions under section 6724, and the applicable regulations.

(k) *Special rules for governmental units*—(1) *Person appropriately designated.* In the case of any applicable large employer member that is a governmental unit or any agency or instrumentality thereof, the person or persons appropriately designated under section 6056(e) for purposes of the filing and furnishing requirements of section 6056 must be part of or related to the same governmental unit as the applicable large employer member. The applicable large employer member must make (or revoke) the designation before the earlier of the deadline for filing the returns or furnishing the statements required by this section. A person that has been appropriately designated under section 6056(e) must file a separate section 6056 return and transmittal for each applicable large employer member for which the person is reporting. The person appropriately designated under section 6056(e) assumes responsibility for the section 6056 requirements on behalf of the applicable large employer member for which the person is designated.

(2) *Written designation.* The designation under section 6056(e) must be made in writing, must be signed by both the applicable large employer member and the designated person, and must be effective under all applicable laws. The designation must set forth the name and employer identification number of the designated person, and appoint such person as the person responsible for reporting under section 6056 on behalf of the applicable large employer member. The designation must contain information identifying the category of full-time employees (which may be full-time employees eligible for a specified health plan, or in a particular job category, as long as the specific employees covered by the designation can be identified) for which the designated person is responsible for reporting under section 6056 on behalf of the applicable large employer member. If the designated person is responsible for reporting under section 6056 for all full-time employees of an applicable large employer member, the designation must so indicate. The designation must contain language that the designated person agrees and certifies that it is the appropriately designated person under section 6056(e), and an acknowledgement that the designated person is responsible for reporting under section 6056 on behalf of the applicable large employer member and subject to the requirements of section 6056, including for purposes of information reporting requirements under sections 6721, 6722, and 6724. The designation must also set forth the name and employer identification number of the applicable large employer member, identifying the applicable large employer member as the person subject to the requirements of section 4980H. An equivalent applicable statutory or regulatory designation containing the language described in this paragraph (k)(2) will be treated as a written designation for purposes of section 6056(e) and this section.

(l) *Additional guidance.* The Commissioner may prescribe additional guidance of general applicability, published in the Internal Revenue Bulletin (see § 601.601(d)(2)(ii)(*b*)) to provide additional rules under section 6056, including rules permitting use of alternate optional methods to meet reporting requirements.

(m) *Effective/applicability date.* The rules of this section are effective as of the date of publication of the Treasury decision adopting these rules as final regulations in the **Federal Register**. This section applies for calendar years beginning after December 31, 2014. Reporting entities will not be subject to penalties under sections 6721 or 6722 with respect to the reporting requirements for 2014 (for information returns filed and for statements furnished to employees in 2015).

■ **Par 4.** Section 301.6056–2 is added to read as follows:

§ 301.6056–2 Electronic furnishing of statements.

(a) *Electronic furnishing of statements*—(1) *In general.* An applicable large employer member required by § 301.6056–1 to furnish a statement (furnisher) to a full-time employee (a recipient) may furnish the statement in an electronic format in lieu of a paper format, provided that the employer meets the requirements of paragraphs (a)(2) through (a)(6) of this section. An applicable large employer member who meets the requirements of paragraphs (a)(2) through (6) of this section is treated as furnishing the statement in a timely manner.

(2) *Consent*—(i) *In general.* The recipient must have affirmatively consented to receive the statement in an electronic format. The consent may be made electronically in any manner that reasonably demonstrates that the recipient can access the statement in the electronic format in which it will be furnished to the recipient. Alternatively, the consent may be made in a paper document if it is confirmed electronically.

(ii) *Withdrawal of consent.* The consent requirement of this paragraph (a)(2) is not satisfied if the recipient withdraws the consent and the withdrawal takes effect before the statement is furnished. The furnisher may provide that a withdrawal of consent takes effect either on the date it is received by the furnisher or on a subsequent date. The furnisher may also provide that a request for a paper statement will be treated as a withdrawal of consent.

(iii) *Change in hardware or software requirements.* If a change in the hardware or software required to access the statement creates a material risk that the recipient will not be able to access the statement, the furnisher must, prior to changing the hardware or software, provide the recipient with a notice. The notice must describe the revised hardware and software required to access the statement and inform the recipient that a new consent to receive the statement in the revised electronic format must be provided to the furnisher. After implementing the revised hardware and software, the furnisher must obtain from the recipient, in the manner described in paragraph (a)(2)(i) of this section, a new consent or confirmation of consent to receive the statement electronically.

(iv) Examples. The following examples illustrate the rules of this paragraph (a)(2):

Example 1. Furnisher F sends Recipient R a letter stating that R may consent to receive section 6056 statements electronically on a Web site instead of in a paper format. The letter contains instructions explaining how to consent to receive section 6056 statements electronically by accessing the Web site, downloading the consent document, completing the consent document and emailing the completed consent back to F. The consent document posted on the Web site uses the same electronic format that F will use for the electronically furnished section 6056 statements. R reads the instructions and submits the consent to receive the statements electronically in the manner described in paragraph (a)(2)(i) of this section. R has consented to receive the statements electronically in the manner described in paragraph (a)(2)(i) of this section.

Example 2. Furnisher F sends Recipient R an email stating that R may consent to receive section 6056 statements electronically instead of in a paper format. The email contains an attachment instructing R how to consent to receive section 6056 statements electronically. The email attachment uses the same electronic format that F will use for the electronically furnished section 6056 statements. R opens the attachment, reads the instructions, and

submits the consent in the manner provided in the instructions. R has consented to receive section 6056 statements electronically in the manner described in paragraph (a)(2)(i) of this section.

Example 3. Furnisher F posts a notice on its Web site stating that Recipient R may receive section 6056 statements electronically instead of in a paper format. The Web site contains instructions on how R may access a secure Web page and consent to receive the statements electronically. By accessing the secure Web page and giving consent, R has consented to receive section 6056 statements electronically in the manner described in paragraph (a)(2)(i).

(3) *Required disclosures*—(i) *In general.* Prior to, or at the time of, a recipient's consent, the furnisher must provide to the recipient a clear and conspicuous disclosure statement containing each of the disclosures described in paragraphs (a)(3)(ii) through (viii) of this section.

(ii) *Paper statement.* The recipient must be informed that the statement will be furnished on paper if the recipient does not consent to receive it electronically.

(iii) *Scope and duration of consent.* The recipient must be informed of the scope and duration of the consent. For example, the recipient must be informed whether the consent applies to each statement required to be furnished after the consent is given until it is withdrawn in the manner described in paragraph (a)(3)(v)(A) of this section or only to the first statement required to be furnished following the date on which the consent is given.

(iv) *Post-consent request for a paper statement.* The recipient must be informed of any procedure for obtaining a paper copy of the recipient's statement after giving the consent described in paragraph (a)(2)(i) of this section and whether a request for a paper statement will be treated as a withdrawal of consent.

(v) *Withdrawal of consent.* The recipient must be informed that—

(A) The recipient may withdraw a consent by writing (electronically or on paper) to the person or department whose name, mailing address, telephone number, and email address is provided in the disclosure statement,

(B) The furnisher will confirm the withdrawal and the date on which it takes effect in writing (either electronically or on paper), and

(C) A withdrawal of consent does not apply to a statement that was furnished electronically in the manner described in this paragraph (a) before the date on which the withdrawal of consent takes effect.

(vi) *Notice of termination.* The recipient must be informed of the conditions under which a furnisher will cease furnishing statements electronically to the recipient (for example, termination of the recipient's employment with furnisher-employer).

(vii) *Updating information.* The recipient must be informed of the procedures for updating the information needed by the furnisher to contact the recipient. The furnisher must inform the recipient of any change in the furnisher's contact information.

(viii) *Hardware and software requirements.* The recipient must be provided with a description of the hardware and software required to access, print, and retain the statement, and the date when the statement will no longer be available on the Web site. The recipient must be informed that the statement may be required to be printed and attached to a Federal, State, or local income tax return.

(4) *Format.* The electronic version of the statement must contain all required information and comply with applicable revenue procedures relating to substitute statements to recipients.

(5) *Notice*—(i) *In general.* If the statement is furnished on a Web site, the furnisher must notify the recipient that the statement is posted on a Web site. The notice may be delivered by mail, electronic mail, or in person. The notice must provide instructions on how to access and print the statement. The notice must include the following statement in capital letters, ''IMPORTANT TAX RETURN DOCUMENT AVAILABLE.'' If the notice is provided by electronic mail, the foregoing statement must be on the subject line of the electronic mail.

(ii) *Undeliverable electronic address.* If an electronic notice described in paragraph (a)(5)(i) of this section is returned as undeliverable, and the correct electronic address cannot be obtained from the furnisher's records or from the recipient, then the furnisher must furnish the notice by mail or in person within 30 days after the electronic notice is returned.

(iii) *Corrected statement.* If the furnisher has corrected a recipient's statement as directed in § 301.6056–1(k) and the statement was furnished electronically, the furnisher must furnish the corrected statement to the recipient electronically. If the recipient's statement was furnished through a Web site posting and the furnisher has corrected the statement, the furnisher must notify the recipient that it has posted the corrected statement on the Web site within 30 days of such posting in the manner described in paragraph (a)(5)(i) of this section. The corrected statement or the notice must be furnished by mail or in person if—

(A) An electronic notice of the Web site posting of an original statement or the corrected statement was returned as undeliverable, and

(B) The recipient has not provided a new email address.

(6) *Access period.* Statements furnished on a Web site must be retained on the Web site through October 15 of the year following the calendar year to which the statements relate (or the first business day after October 15, if October 15 falls on a Saturday, Sunday, or legal holiday). The furnisher must maintain access to corrected statements that are posted on the Web site through October 15 of the year following the calendar year to which the statements relate (or the first business day after such October 15, if October 15 falls on a Saturday, Sunday, or legal holiday) or the date 90 days after the corrected forms are posted, whichever is later.

(7) *Paper statements after withdrawal of consent.* If a recipient withdraws consent to receive a statement electronically and the withdrawal takes effect before the statement is furnished electronically, a paper statement must be furnished. A paper statement furnished after the statement due date under this paragraph (a)(7) will be considered timely if furnished within 30 days after the date the withdrawal of consent is received by the furnisher.

(b) *Effective/applicability date.* The rules of this section are effective as of the date of publication of the Treasury decision adopting these rules as final regulations in the **Federal Register**. This section applies for calendar years beginning after December 31, 2014. Reporting entities will not be subject to penalties under sections 6721 or 6722 with respect to the reporting requirements for 2014 (for information returns filed and for statements furnished to employees in 2015).

Heather C. Maloy,

Acting Deputy Commissioner for Services and Enforcement.

[FR Doc. 2013–21791 Filed 9–5–13; 4:15 pm]

BILLING CODE 4830–01–P

DEPARTMENT OF JUSTICE

Bureau of Alcohol, Tobacco, Firearms, and Explosives

27 CFR Part 479

[Docket No. ATF 41P; AG Order No. 3398–2013]

RIN 1140–AA43

Machine Guns, Destructive Devices and Certain Other Firearms; Background Checks for Responsible Persons of a Corporation, Trust or Other Legal Entity With Respect To Making or Transferring a Firearm

AGENCY: Bureau of Alcohol, Tobacco, Firearms, and Explosives (ATF), Department of Justice.

ACTION: Notice of proposed rulemaking.

SUMMARY: The Department of Justice proposes amending Bureau of Alcohol, Tobacco, Firearms, and Explosives (ATF) regulations that concern the making or transferring of a firearm under the National Firearms Act (NFA). The proposed changes include: Defining the term ''responsible person,'' as used in reference to a trust, partnership, association, company, or corporation; requiring ''responsible persons'' of such legal entities to submit, *inter alia,* photographs and fingerprints, as well as a law enforcement certificate, when the legal entity files an application to make an NFA firearm or is listed as the transferee on an application to transfer an NFA firearm; modifying the information required in a law enforcement certificate, so that the certificate no longer requires a statement from the certifying official that he or she has no information indicating that the maker or transferee of the NFA firearm will use the firearm for other than lawful purposes; and adding a new section to ATF's regulations to address the possession and transfer of firearms registered to a decedent. The new section would clarify that the executor, administrator, personal representative, or other person authorized under state law to dispose of property in an estate may possess a firearm registered to a decedent during the term of probate without such possession being treated as a ''transfer'' under the NFA. It also would specify that the transfer of the firearm to any beneficiary of the estate may be made on a tax-exempt basis.

DATES: Written comments must be postmarked and electronic comments must be submitted on or before December 9, 2013. Commenters should be aware that the electronic Federal Docket Management System will not accept comments after 11:59 p.m. Eastern Time on the last day of the comment period.

ADDRESSES: You may submit comments, identified by docket number (ATF 41P), by any of the following methods—

- *Federal eRulemaking Portal: http://www.regulations.gov.* Follow the instructions for submitting comments.
- *Fax:* (202) 648–9741.
- *Mail:* Brenda Raffath Friend, Mailstop 6N–602, Office of Regulatory Affairs, Enforcement Programs and Services, Bureau of Alcohol, Tobacco, Firearms, and Explosives, U.S. Department of Justice, 99 New York Avenue NE., Washington, DC 20226; *ATTN: ATF 41P.*

Instructions: All submissions received must include the agency name and docket number for this rulemaking. All comments received will be posted without change to the Federal eRulemaking portal, *http://www.regulations.gov,* including any personal information provided. For detailed instructions on submitting comments and additional information on the rulemaking process, see the ''Public Participation'' heading of the **SUPPLEMENTARY INFORMATION** section of this document.

FOR FURTHER INFORMATION CONTACT: Brenda Raffath Friend, Office of Regulatory Affairs, Enforcement Programs and Services, Bureau of Alcohol, Tobacco, Firearms, and Explosives, U.S. Department of Justice, 99 New York Avenue NE., Washington, DC 20226; telephone: (202) 648–7070.

SUPPLEMENTARY INFORMATION:

I. Background

The Attorney General is responsible for enforcing the provisions of the NFA, 26 U.S.C. Chapter 53.[1] The Attorney General has delegated that responsibility to the Director of ATF, subject to the direction of the Attorney General and the Deputy Attorney General. 28 CFR 0.130(a). Regulations implementing the provisions of the NFA are set forth in 27 CFR part 479, which contains the procedural and substantive requirements relating to the importation, making, exportation, transfer, taxing, identification, registration of, and the dealing in, machine guns, destructive devices, and certain other firearms.

A. Application To Make a Firearm

Section 5822 of the NFA, 26 U.S.C. 5822, provides that no person shall make a firearm unless the person has: (I) Filed with the Attorney General a written application, in duplicate, to make and register the firearm; (II) paid any tax payable on the making, and evidenced such payment by affixing the proper stamp to the original application form; (III) identified the firearm to be made in the application form, in such manner as prescribed by regulation; (IV) identified themself in the application form, in such manner as prescribed by regulation, except that, if such person is an individual, the identification must include the individual's fingerprints and photograph; and (V) obtained the approval of the Attorney General to make and register the firearm and shows such approval on the application form. Applications shall be denied if the making or possession of the firearm would place the person making the firearm in violation of law. For purposes of title 26, United States Code, the term ''person'' means ''an individual, a trust, estate, partnership, association, company or corporation.'' 26 U.S.C. 7701(a)(1).

Regulations implementing section 5822 are set forth in 27 CFR part 479, subpart E. Section 479.62 provides, in pertinent part, that no person may make a firearm unless the person has filed with the Director a written application on ATF Form 1 (5320.1), *Application to Make and Register a Firearm,* in duplicate, and has received the approval of the Director to make the firearm. Approval of the application will effectuate registration of the firearm to the applicant. The application must identify the firearm to be made by serial number and other specified markings and information. In addition, the applicant must be identified on the form by name and address and, if other than a natural person (e.g., a corporation or trust), by the name and address of the principal officer or authorized representative of the entity, as well as the employer identification number of the entity. If an individual, the identification must also include certain information prescribed in § 479.63.

Section 479.63 states that if the applicant is an individual, a photograph of the applicant, approximately 2 × 2 inches and taken within 1 year prior to the date of the application, must be affixed to the indicated space on each copy of the Form 1. The regulation also provides that a completed Federal Bureau of Investigation (FBI) Form FD–

[1] Provisions of the NFA discussed below refer to the ''Secretary'' rather than the ''Attorney General''; however, the relevant functions of the Secretary of the Treasury have been transferred to the Department of Justice, under the general authority of the Attorney General. 28 U.S.C. 599A(c)(1). For ease of reference, we will substitute ''Attorney General'' for ''Secretary'' when discussing these statutes.

258 (Fingerprint Card), containing the fingerprints of the applicant, must be submitted in duplicate with the application.

In addition, section 479.63 provides that the law enforcement certificate located on Form 1 must be completed and signed by the local chief of police or county sheriff, the head of the state police, the state or local district attorney or prosecutor, or such other person whose certificate may be acceptable to the Director. The certifying official must state, *inter alia,* that he or she has no information indicating that possession of the firearm by the maker would be in violation of state or local law or that the maker will use the firearm for other than lawful purposes. The certifying official must have jurisdiction over the area within which the maker resides. The purpose of this requirement is to ensure that the official will have access to criminal records concerning the maker, and knowledge of the state and local laws governing the transfer, receipt, and possession of the firearm by the maker.

Under the current regulations, the requirements for fingerprints, photographs, and law enforcement certificate specified in § 479.63 are not applicable to an applicant who is not an individual, e.g., a corporation or other legal entity.

Section 479.64 sets forth the procedure for approval of an application to make a firearm. As specified, the Form 1 application must be forwarded, in duplicate, by the maker of the firearm to the Director, in accordance with the instructions on the form. If the application is approved, the Director will return the original to the maker of the firearm and retain the duplicate. Upon receipt of the approved application, the maker is authorized to make the firearm described therein. The maker of the firearm may not, under any circumstances, make the firearm until the application has been forwarded to the Director and has been approved and returned by the Director with the NFA stamp affixed. If the application is disapproved, the original Form 1 and the remittance submitted by the applicant for the purchase of the stamp will be returned to the applicant with the reason for disapproval stated on the form.

B. Application for Transfer of a Firearm

Section 5812(a) of the NFA, 26 U.S.C. 5812(a), provides that a firearm may not be transferred unless: (I) The transferor of the firearm has filed with the Attorney General a written application, in duplicate, for the transfer and registration of the firearm to the transferee, using the prescribed application form; (II) any tax payable on the transfer is paid as evidenced by the proper stamp affixed to the original application form; (III) the transferee is identified in the application form, in such manner as the Attorney General may prescribe by regulation, except that, if such person is an individual, the identification must include the individual's fingerprints and photograph; (IV) the transferor of the firearm is identified in the application form, in such manner as the Attorney General may prescribe by regulation; (V) the firearm is identified in the application form, in such manner as the Attorney General may prescribe by regulation; and (VI) the application form shows that the Attorney General has approved the transfer and the registration of the firearm to the transferee. Applications shall be denied if the transfer, receipt, or possession of the firearm would place the transferee in violation of law. Section 5812(b) provides that the transferee may not take possession of the firearm unless the Attorney General has approved the transfer and registration of the firearm to the transferee.

Regulations implementing section 5812 are set forth in 27 CFR part 479, subpart F. In general, § 479.84 provides that no firearm may be transferred in the United States unless an application, ATF Form 4 (5320.4), *Application for Tax Paid Transfer and Registration of Firearm,* has been filed in duplicate with, and approved by, the Director. Form 4 must be filed by the transferor and must identify the firearm to be transferred by type, serial number, and other specified markings and information. The application must identify the transferor by name and address and must include the transferor's Federal firearms license and special (occupational) tax stamp, if any. If the transferor is other than a natural person, the title or status of the person executing the application must be provided. The application must identify the transferee by name and address and, if the transferee is a natural person not qualified as a manufacturer, importer, or dealer under part 479, the person must be further identified in the manner prescribed in § 479.85.

Section 479.85 states that if the transferee is an individual, such person must securely attach to each copy of the Form 4, in the space provided on the form, a 2 x 2 inch photograph of the transferee taken within 1 year prior to the date of the application. The transferee must also attach to the application two properly completed FBI Forms FD–258 (Fingerprint Card). In addition, a certificate by the local chief of police, county sheriff, head of the state police, state or local district attorney or prosecutor, or such other person whose certificate may in a particular case be acceptable to the Director, must be completed on each copy of the Form 4. The certifying official must state, *inter alia,* that he or she has no information indicating that the receipt or possession of the firearm would place the transferee in violation of state or local law or that the transferee will use the firearm for other than lawful purposes. The certifying official must have jurisdiction over the area within which the transferee resides. The purpose of this requirement is to ensure that the official will have access to criminal records concerning the transferee, and knowledge of the state and local laws governing the transfer, receipt, and possession of the firearm by the transferee.

Under the current regulations, the requirements for fingerprints, photographs, and law enforcement certificate specified in § 479.85 apply only to natural persons not qualified as a manufacturer, importer, or dealer under part 479; they do not apply to transferees who are not natural persons, e.g., corporations or other legal entities.

C. Transfer Tax Exemption Available

Section 5852(e) of the NFA, 26 U.S.C. 5852(e), provides that an unserviceable firearm may be transferred as a curio or ornament without payment of the transfer tax imposed by section 5811, under such requirements as the Attorney General may by regulations prescribe.

Section 5853(a) of the NFA, 26 U.S.C. 5853(a), provides that a firearm may be transferred without the payment of the transfer tax imposed by section 5811 to any State, possession of the United States, any political subdivision thereof, or any official police organization of such a government entity engaged in criminal investigations.

Regulations implementing sections 5852(e) and 5853(a) are set forth in 27 CFR 479.90 and 479.91. These sections provide, in pertinent part, that the exemption from the transfer tax for the transfer of an unserviceable firearm as a curio or ornament or for a transfer to or from certain government entities may be obtained by the transferor of the firearm by filing with the Director an application, ATF Form 5 (5320.5), *Application for Tax Exempt Transfer and Registration of Firearm,* in duplicate. The application must: (I) Show the name and address of the transferor and of the transferee; (II) identify the Federal firearms license and special (occupational) tax stamp, if any,

of the transferor and of the transferee; (III) show the name and address of the manufacturer and the importer of the firearm, if known; (IV) show the type, model, overall length (if applicable), length of barrel, caliber, gauge or size, serial number, and other marks of identification of the firearm; and (V) contain a statement by the transferor that the transferor is entitled to the exemption because either the transferor or the transferee is a governmental entity coming within the purview of § 479.90(a) or the firearm is unserviceable and is being transferred as a curio or ornament. In the case of the transfer of a firearm by a governmental entity to a transferee who is a natural person not qualified as a manufacturer, importer, or dealer under part 479, the transferee must be further identified in the manner prescribed in § 479.85.

II. Petition

ATF received a petition for rulemaking, dated December 3, 2009, filed on behalf of the National Firearms Act Trade and Collectors Association (NFATCA). The petition requests amendments to §§ 479.63 and 479.85, as well as to corresponding ATF Forms 1 and 4. The requested amendments are discussed below.

A. Amendment of §§ 479.63 and 479.85

As discussed above, the photograph, fingerprint card, and chief law enforcement officer (CLEO) certificate requirements of §§ 479.63 and 479.85 do not apply if the applicant or transferee is a partnership, company, association, trust, or corporation. As such, persons who possess, directly or indirectly, the power or authority to receive, possess, ship, transport, deliver, transfer or otherwise dispose of a firearm for, or on behalf of the entity are not subject to these requirements, and ATF does not conduct a background check of those individuals.

The NFATCA expressed concern that persons who are prohibited by law from possessing or receiving firearms may acquire NFA firearms through the establishment of a legal entity such as a corporation, trust, or partnership. It contends that the number of applications to acquire NFA firearms via a corporation, partnership, trust, or other legal entity has increased significantly over the years. ATF has researched the issue and has determined that the number of Forms 1, 4, and 5 involving legal entities that are not Federal firearms licensees increased from approximately 840 in 2000 to 12,600 in 2009 and to 40,700 in 2012. There accordingly has been an increase in the number of individuals who have access to NFA firearms but who have not undergone a background check. The petitioner expressed concern that an NFA firearm could be acquired by a prohibited person and used in a violent crime. Therefore, for applications for a corporation, trust, partnership, or other legal entity to make or receive an NFA firearm, the petitioner has requested amendments to §§ 479.63 and 479.85 to require photographs and fingerprint cards for persons who are responsible for directing the management and policies of the entity, so that a background check of the individual may be conducted.

The Department of Justice agrees with the concerns underlying this proposal, and believes that such persons should not be excluded from background checks and other requirements of the regulations that seek to ensure that prohibited persons do not gain access to NFA firearms. ATF recently encountered a situation where an application for a transfer of a silencer was denied because the transferee was determined to be prohibited from possessing an NFA firearm. The transferor subsequently applied to transfer the same silencer to a trust whose name contained the same last name as the prior transferee. ATF reviewed the trust documents and found that the prohibited person was a settlor of the trust and, thus, would have access to the firearm. ATF denied the transfer. However, if the trust name had been different from that of the prior transferee, or if the transferor sought to transfer a different firearm, ATF employees may not have realized that the prior transferee was a settlor of the trust and so may have approved the transfer.

B. Certification of Citizenship

When filing an ATF Form 1, 4, or 5, the applicant also must submit ATF Form 5330.20, *Certification of Compliance with 18 U.S.C. 922(g)(5)(B).* Under section 922(g)(5)(B) of the Gun Control Act, 18 U.S.C. 922(g)(5)(B), it generally is unlawful for any alien admitted under a nonimmigrant visa to ship or transport in interstate or foreign commerce, or possess in or affecting commerce, any firearm or ammunition, or to receive any firearm or ammunition that has been shipped or transported in interstate or foreign commerce. Section 922(y)(2) provides for certain exceptions. 18 U.S.C. 922(y)(2). If an alien who was admitted under a nonimmigrant visa falls within one of the specified exceptions, or has obtained a waiver from the Attorney General under 18 U.S.C. 922(y)(3), appropriate documentation must be provided on Form 5330.20.

The petitioner requests that the information required on Form 5330.20 be incorporated into the requirements of 27 CFR 479.63 and 479.85 and the corresponding forms. According to the petitioner, ''[e]limination of the ATF Form 5330.20 by adding a citizenship statement to the transfer [and making] forms would reduce human effort for both the public and ATF while reducing funds expenditures for printing, copying, and handling the form.''

The Department supports the elimination of unnecessary forms and is committed to reducing the paperwork burden for individuals and businesses. Accordingly, the Department proposes amending 27 CFR 479.62 and 479.84 and the corresponding forms to incorporate information currently required in Form 5330.20.

C. Revision of Instructions on Forms 1, 4, and 5

The NFATCA requests that the instructions on applications to make or transfer a firearm be revised so that they are consistent with those on ATF Form 7 (5310.12), *Application for Federal Firearms License.* The petitioner appears to be referring to the instruction on Form 7 regarding the submission of photographs and fingerprint cards for responsible persons, namely, in the case of a corporation, partnership, or association, any individual possessing, directly or indirectly, the power to direct or cause the direction of the management, policies, and practices of the legal entity, insofar as they pertain to firearms. The Department agrees that proposed changes to regulations will require modifications to corresponding Forms 1, 4, and 5, including changes to the instructions on the forms.

D. Law Enforcement Certificate

With respect to an application to make a firearm, 27 CFR 479.63 provides that if the applicant is an individual, a certificate of the local chief of police, county sheriff, head of the state police, state or local district attorney or prosecutor, or such other person whose certificate may be acceptable to the Director, shall be completed on each copy of the Form 1. The certificate must state, *inter alia,* that the certifying official has no information indicating that possession of the firearm by the maker would be in violation of state or local law or that the maker will use the firearm for other than lawful purposes. The law enforcement certificate requirement also applies with respect to an application to transfer a firearm if the

transferee is an individual. 27 CFR 479.85.

The petitioner requests that the law enforcement certificate requirement be eliminated and that ATF ''adopt a CLEO [chief law enforcement officer] process that will include a full NICS [National Instant Criminal Background Check System] check for principal officers of a trust or corporation receiving such firearms for the trust or corporation.'' The petitioner articulates several reasons in support of its request. For example, it states that the lack of cooperation on the part of many CLEOs in recent years has forced larger numbers of individuals to acquire NFA firearms via a trust or corporate entity, so as to avoid the need for a law enforcement certificate. The petitioner also asserts that ATF no longer accepts the CLEO certificate as prima facie verification of compliance with state and local law, and that the certificate therefore does not alleviate the burden on ATF to verify that receipt or possession of a NFA firearm would not place the applicant or transferee in violation of state or local law.

Although ATF agrees in principle with some of petitioner's assertions (for example, with the fact that ATF independently verifies whether receipt or possession of a NFA firearm would place the applicant or transferee in violation of state or local law), ATF does not propose to eliminate the CLEO certificate requirement at this time. Rather, ATF proposes extending the CLEO certificate requirement to responsible persons of a legal entity. ATF also proposes amending the language of the certificate to omit the requirement that the certifying official state that he has no information that the applicant or transferee will use the firearm for other than lawful purposes.

Sections 5812 and 5822 of the NFA, 26 U.S.C. 5812 and 5822, provide that applications shall be denied if the transfer, making, receipt, or possession of the firearm would place the applicant or transferee in violation of law. When the law enforcement certificate requirement was implemented in 1934, local law enforcement officials were generally better situated than federal officials to determine whether the transfer, making, receipt, or possession of the firearm would place the applicant or transferee in violation of state or local law. There were not at that time any readily accessible national automated databases, such as the National Crime Information Center (NCIC), that could facilitate instantaneous comprehensive nationwide criminal background checks. Although federal officials would consult available criminal history and criminal identification records, the assessment of whether an applicant or transferee would use the firearm for other than lawful purposes often was based on information in the possession of local police. The CLEO certificate requirement thus was intended in part to ensure that an individual's authority to make, receive, or possess an NFA firearm was consistent with state and local law, and that the background of the individual was assessed by those in the best position to evaluate it.

In light of the NCIC's establishment in 1967 and additional technological developments, ATF now has direct access to a number of criminal history databases, a fact that puts it in a stronger position than before to assess the criminal background of applicants and transferees. ATF no longer relies exclusively on CLEO certificates to assess whether the making, receipt, or possession of a firearm by an applicant or transferee would violate state or local law or whether a particular applicant or transferee has a record that would warrant denying the application. ATF conducts its own background checks of individuals applying to make and receive NFA firearms. In addition to transmitting fingerprints to the FBI for a criminal history check, ATF routinely queries the following databases and indexes:

- National Crime Information Center
- TECS (formerly named the Treasury Enforcement Communication System)
- National Law Enforcement Telecommunications System
- Interstate Identification Index
- National Instant Criminal Background Check System

Although access to these databases provides ATF with a fuller picture of any individual than was possible in 1934, the available information is not comprehensive in all cases. For a variety of reasons, it is still the case that local law enforcement may have access to more complete records. For example, according to a 2006 publication by the Department of Justice, not all state criminal history records meet the standard for inclusion in the Interstate Identification Index database (the national criminal history record depository maintained by the FBI), and only 50 percent of arrest records in the database have final dispositions.[2] To ensure that background checks for NFA firearms are as complete as possible, ATF proposes to retain the CLEO certificate requirement for individuals, and to expand the requirement to responsible persons of a legal entity.

With respect to the law enforcement officer's statement in the CLEO certificate that he or she has no information indicating that the transferee will use the firearm described on the Form 4 for other than lawful purposes, the petitioner states that ''[s]ome CLEOs express a concern of perceived liability; that signing an NFA transfer application will link them to any inappropriate use of the firearm.'' ATF agrees with the petitioner that state and local law enforcement officials may be concerned with the language of the current law enforcement certificate, a concern that also applies to Forms 1 and 5. ATF has received numerous statements from chiefs of police, sheriffs, and other CLEOs expressing discomfort with the portion of the certificate that requires them to state that they have no information to suggest that the individual will use the firearm for other than lawful purposes. ATF is aware that officials in a number of jurisdictions refuse to sign the certificate because of concern about potential liability for an individual's intentional or accidental misuse. Such refusals have resulted in litigation by some applicants against ATF. *See Lomont* v. *O'Neill,* 285 F.3d 9 (D.C. Cir. 2002); *Westfall* v. *Miller,* 77 F.3d 868 (5th Cir. 1996). While courts have upheld the CLEO certificate requirement, ATF proposes to amend the language of the regulations and the corresponding forms to address this concern. Sections 479.63 and 479.85 will no longer require the certificate to contain a statement regarding information about the use of the firearm for other than lawful purposes. ATF requests comments on the specific language proposed, and whether this change will address the concerns raised by some CLEOs.

III. Proposed Rule

A. Amendment of § 479.11

The Department proposes amending § 479.11 to add a definition for the term ''responsible person.'' The term would include specific definitions in the case of a trust, partnership, association, company (including a Limited Liability Company (LLC)), or corporation. Depending on the context, the term includes any individual, including any grantor, trustee, beneficiary, partner, member, officer, director, board member, owner, shareholder, or manager, who possesses, directly or indirectly, the power or authority under any trust instrument, contract, agreement, article, certificate, bylaw, or

[2] U.S. Department of Justice, The Attorney General's Report on Criminal History Background Checks, at 17 (June 2006), available at *http://www.justice.gov/olp/ag_bgchecks_report.pdf.*

instrument, or under state law, to receive, possess, ship, transport, deliver, transfer, or otherwise dispose of a firearm for, or on behalf of, the entity.

To ensure that responsible persons, as so defined, are subject to penalties under 26 U.S.C. 5871 for committing prohibited acts under the NFA (as defined in 26 U.S.C. 5861) to the same extent as are the legal entities with which they are associated, the Department also proposes amending the definition of ''person'' in 27 CFR 479.11 to clarify that a ''person'' is a partnership, company, association, trust, or corporation, including each responsible person associated with such an entity; an estate; or an individual.

Although the definition of ''person'' in section 479.11 includes the word ''estate,'' ATF traditionally has treated estates differently from business entities, and does not propose defining the term ''responsible person'' to include estates. Estates are temporary legal entities created to dispose of property previously possessed by a decedent. The term during which an estate exists typically is defined by state law in the State in which the decedent resided. Conversely, partnerships, trusts, associations, companies, and corporations are formed for a specific purpose and remain in existence until action is taken to dissolve them.

Historically, ATF has treated the transfer of an NFA-registered firearm held by an estate differently from other transfers under the NFA. ATF allows the registered firearm to be held by the executor, administrator, personal representative, or other person authorized under state law to dispose of property in an estate (executor) without such possession being treated as a transfer under the NFA. Because the executor holds the property temporarily, is representing the decedent, and is bound by the limits of probate, ATF does not register the firearm to the executor and allows the transfer from the estate of the decedent directly to the beneficiaries, with the executor signing as the transferor. The disposition of the firearm to the beneficiaries of the estate is a ''transfer by operation of law,'' because it is an involuntary transfer dictated by the terms of a will or by intestacy laws in the State where the decedent resided. The transfer to the beneficiaries of the estate is treated like any other transfer of registered firearms, except that ATF allows such transfers to be made on a tax-exempt basis when an ATF Form 5 is submitted and approved in accordance with 27 CFR 479.90. The transfer of the firearm to persons outside the estate requires the executor to file an ATF Form 4 and to pay any transfer tax in accordance with § 479.84.

B. Amendment of §§ 479.62 and 479.63

With respect to an application to make a firearm, the Department proposes several amendments to §§ 479.62 (Application to make) and 479.63 (Identification of applicant).

The proposed § 479.62:

1. Provides that if the applicant is a partnership, company, association, trust, or corporation, all information on the Form 1 application must be furnished for each responsible person of the applicant;

2. Specifies that if the applicant is a partnership, company, association, trust, or corporation, each responsible person must comply with the identification requirements prescribed in § 479.63(b); and

3. Requires the applicant (including, if other than an individual, any responsible person), if an alien admitted under a nonimmigrant visa, to provide applicable documentation demonstrating that he or she falls within an exception to 18 U.S.C. 922(g)(5)(B) or has obtained a waiver of that provision.

The proposed § 479.63, where the applicant is an individual, maintains the CLEO certificate but omits the requirement for a statement about the use of a firearm for other than lawful purposes. The certificate must state that the official is satisfied that the fingerprints and photograph accompanying the application are those of the applicant and that the official has no information indicating that possession of the firearm by the maker would be in violation of state or local law.

The CLEO's certification that he or she ''is satisfied that the fingerprints and photograph accompanying the application are those of the applicant,'' is an existing requirement. ATF intends to modify Form 1 to include certification to that effect by the CLEO for individuals (which has always been a requirement but was not reflected on the current form). As discussed below, ATF will include the same certification on Form 5320.23 for responsible persons of a legal entity.

The proposed § 479.63, where the applicant is a partnership, company, association, trust, or corporation:

1. Provides that the applicant must be identified on the Form 1 application by the name and exact location of the place of business, including the name of the county in which the business is located or, in the case of a trust, the address where the firearm is located. In the case of two or more locations, the address shown must be the principal place of business (or principal office, in the case of a corporation) or, in the case of a trust, the principal address at which the firearm is located;

2. Requires the applicant to attach to the application:

- Documentation evidencing the existence and validity of the entity, which includes, without limitation, complete and unredacted copies of partnership agreements, articles of incorporation, corporate registration, declarations of trust with any trust schedules, attachments, exhibits, and enclosures; however, if the entity had an application approved as a maker or transferee within the preceding 24 months, and there has been no change to the documentation previously provided, the entity may provide a certification that the information has not changed since the prior approval and must identify the application for which the documentation had been submitted by form number, serial number, and date approved;
- A completed ATF Form 5320.23 for each responsible person. Form 5320.23 would require certain identifying information for each responsible person, including each responsible person's full name, position, social security number (optional), home address, date and place of birth, and country of citizenship;
- In accordance with the instructions provided on Form 5320.23, a photograph of each responsible person 2 × 2 inches in size, clearly showing a full front view of the features of the responsible person with head bare, with the distance from the top of the head to the point of the chin approximately 1¼ inches, and which must have been taken within 1 year prior to the date of the application;
- Two properly completed FBI Forms FD–258 (Fingerprint Card) for each responsible person. The fingerprints must be clear for accurate classification and should be taken by someone properly equipped to take them; and
- In accordance with the instructions provided on Form 5320.23, a certificate for each responsible person completed by the local chief of police, sheriff of the county, head of the state police, state or local district attorney or prosecutor, or such other person whose certificate may in a particular case be acceptable to the Director. The certificate for each responsible person must be completed by the CLEO who has jurisdiction in the area in which the responsible person resides. The certificate must state that the official is satisfied that the fingerprints and photograph accompanying the application are those of the responsible person and that the certifying official has no information

indicating that possession of the firearm by the responsible person would be in violation of state or local law.

ATF seeks public comments regarding whether it is feasible to ask CLEOs to certify that they are satisfied that the photographs and fingerprints match those of the responsible person. For example, some responsible persons may bring their fingerprint cards to the CLEO office already stamped, and some legal entities may have the paperwork, fingerprint cards, and photographs for each of their responsible persons couriered to the CLEO office. In such instances, ATF seeks comments on whether CLEOs will have enough information to certify that they are satisfied that the photographs and fingerprints match those of the responsible persons, or whether changes are needed to this proposal.

C. Amendment of §§ 479.84 and 479.85

With respect to an application to transfer a firearm, the Department proposes several amendments to §§ 479.84 (Application to transfer) and 479.85 (Identification of transferee).

The proposed § 479.84:

1. Provides that the Form 4 application, in duplicate, must be filed by the transferor. If the transferee is a partnership, company, association, trust, or corporation, all information on the Form 4 application must be furnished for each responsible person of the transferee; and

2. Provides that the type of firearm being transferred must be noted on the Form 4. If the firearm is other than one classified as ''any other weapon,'' the applicant must submit a remittance in the amount of $200 with the application in accordance with the instructions on the form. If the firearm is classified as ''any other weapon,'' the applicant must submit a remittance in the amount of $5.

The proposed § 479.85, where the transferee is an individual, maintains the certificate but omits the requirement for a statement about the use of a firearm for other than lawful purposes. The certificate must state that the official is satisfied that the fingerprints and photograph accompanying the application are those of the applicant and that the certifying official has no information indicating that receipt or possession of the firearm by the transferee would be in violation of state or local law.

The CLEO's certification that he or she ''is satisfied that the fingerprints and photograph accompanying the application are those of the applicant,'' is an existing requirement. ATF intends to modify Forms 4 and 5 to include certification to that effect by the CLEO for individuals (which has always been a requirement but was not reflected on the current forms). As discussed below, ATF will include the same certification on Form 5320.23 for responsible persons of a legal entity.

The proposed § 479.85, where the transferee is a partnership, company, association, trust, or corporation:

1. Provides that the transferee must be identified on the Form 4 application by the name and exact location of the place of business, including the name of the county in which the business is located or, in the case of a trust, the address where the firearm is to be located. In the case of two or more locations, the address shown must be the principal place of business (or principal office, in the case of a corporation) or, in the case of a trust, the principal address at which the firearm is to be located;

2. Requires the transferee to attach to the application:

- Documentation evidencing the existence and validity of the entity, which includes, without limitation, complete and unredacted copies of partnership agreements, articles of incorporation, corporate registration, declarations of trust with any trust schedules, attachments, exhibits, and enclosures; however, if the entity has had an application approved as a maker or transferee within the preceding 24 months, and there has been no change to the documentation previously provided, including the responsible person information, the entity may provide a certification that the information has not changed since the prior approval and must identify the application for which the documentation had been submitted by form number, serial number, and date approved;
- A completed ATF Form 5320.23 for each responsible person. Form 5320.23 would require certain identifying information, including the responsible person's full name, position, social security number (optional), home address, date and place of birth, and country of citizenship;
- In accordance with the instructions provided on Form 5320.23, a photograph of each responsible person 2 x 2 inches in size, clearly showing a full front view of the features of the responsible person with head bare, with the distance from the top of the head to the point of the chin approximately 1¼ inches, and which must have been taken within 1 year prior to the date of the application;
- Two properly completed FBI Forms FD–258 (Fingerprint Card) for each responsible person. The fingerprints must be clear for accurate classification and should be taken by someone properly equipped to take them; and
- In accordance with the instructions provided on Form 5320.23, a certificate for each responsible person completed by the local chief of police, sheriff of the county, head of the state police, state or local district attorney or prosecutor, or such other person whose certificate may in a particular case be acceptable to the Director. The certificate for each responsible person must be completed by the CLEO who has jurisdiction in the area in which the responsible person resides. The certificate must state that the official is satisfied that the fingerprints and photograph accompanying the application are those of the responsible person and that the certifying official has no information indicating that receipt or possession of the firearm by the responsible person would be in violation of state or local law.

ATF seeks public comments regarding whether it is feasible to ask CLEOs to certify that they are satisfied that the photographs and fingerprints match those of the responsible person. For example, some responsible persons may bring their fingerprint cards to the CLEO office already stamped, and some legal entities may have the paperwork, fingerprint cards, and photographs for each of their responsible persons couriered to the CLEO office. In such instances, ATF seeks comments on whether CLEOs will have enough information to certify that they are satisfied that the photographs and fingerprints match those of the responsible persons, or whether changes are needed to this proposal.

D. Amendment of § 479.90

Section 5853(a) of the NFA, 26 U.S.C. 5853(a), provides that a firearm may be transferred to any State, possession of the United States, any political subdivision thereof, or any official police organization of such a government entity engaged in criminal investigations, without the payment of the transfer tax. Regulations implementing section 5853(a) are set forth in 27 CFR 479.90. That section provides, in pertinent part, that the transfer tax exemption may be obtained by the transferor of the firearm by filing with the Director an application on ATF Form 5 (5320.5), *Application for Tax Exempt Transfer and Registration of Firearm,* in duplicate. The application must provide certain information, including the name and address of the transferor and the transferee. In the case of a transfer of a firearm by a governmental entity to a transferee who is a natural person not qualified as a

manufacturer, importer, or dealer under part 479, the transferee must be further identified in the manner prescribed in § 479.85.

The Department proposes amending § 479.90(b) to remove the word ''natural.'' Removing the word ''natural'' leaves the term ''person,'' which would be defined in § 479.11 to include a partnership, company, association, trust, or corporation (including each responsible person of such entity), an estate, or an individual. This change would mean that in the case of a transfer of a firearm by a governmental entity to a transferee that is a partnership, company, association, trust, or corporation, and that is not qualified as a manufacturer, importer, or dealer under part 479, each responsible person of the transferee would be subject to the requirements prescribed in § 479.85.

E. Addition of § 479.90a, Estates

The Department proposes adding a new section to part 479 to address the possession and transfer of firearms registered to a decedent. The new section would specify that the executor, administrator, personal representative, or other person authorized under state law to dispose of property in an estate (collectively ''executor'') may lawfully possess the decedent's NFA firearm during the term of probate without such possession being treated as a transfer from the decedent. The new section also would clarify that the executor may transfer firearms held by the estate on a tax-free basis when the transfer is to a beneficiary of the estate; when the transfer is to persons outside the estate, the executor must pay the appropriate transfer tax.

F. Transfer of Unserviceable Firearm

Section 479.91 provides that an unserviceable firearm, defined in § 479.11 as a firearm which is incapable of discharging a shot by means of an explosive and incapable of being readily restored to a firing condition, may be transferred as a curio or ornament without payment of the transfer tax. This section also provides that the procedures set forth in § 479.90 must be followed for the transfer of an unserviceable firearm, with the exception that a statement must be entered on the application that the transferor is entitled to the exemption because the firearm is unserviceable and is being transferred as a curio or ornament. This section will remain unchanged. It references the procedures in § 479.90, which itself references § 479.85, which would be amended by the proposals herein.

G. Miscellaneous

ATF recognizes that the composition of the responsible persons associated with a trust, partnership, association, company, or corporation may change, and is considering a requirement that new responsible persons submit Form 5320.23 within 30 days of the change. ATF seeks comments on this option and solicits recommendations for other approaches.

IV. Statutory and Executive Order Review

A. Executive Order 12866 and 13563—Regulatory Review

This proposed rule has been drafted in accordance with section 1(b) of Executive Order 12866 (''Regulatory Planning and Review'') and with section 1(b) of Executive Order 13563 (''Improving Regulation and Regulatory Review''). The Department of Justice has determined that this proposed rule is a significant regulatory action under section 3(f) of Executive Order 12866, and accordingly this proposed rule has been reviewed by the Office of Management and Budget (OMB).

The proposed rule complies with the public participation requirements of Executive Order 13563. As this rulemaking is in response to a petition for rulemaking, ATF seeks the views of those who are likely to be affected by the proposed rule (including those who are likely to benefit and those who are potentially subject to the proposed rule) prior to issuing the final rule.

This proposed rule will not have an annual effect on the economy of $100 million or more; nor will it adversely affect in a material way the economy, a sector of the economy, productivity, competition, jobs, the environment, public health or safety, or state, local, or tribal governments or communities. Accordingly, this proposed rule is not an economically significant rulemaking as defined by Executive Order 12866. The estimated costs and benefits of the proposed rule are discussed below.

1. Summary of Costs and Benefits

This proposed rule would require certain legal entities (trusts, partnerships, companies, associations, and corporations) applying to make or receive an NFA firearm to submit information for each of its responsible persons to ATF in order for ATF to ensure such persons are not prohibited from possessing NFA firearms. ATF estimates a total cost of $14.9 million annually for: (1) Legal entities to gather, procure, and submit such information to ATF; (2) ATF to process the information and conduct a background check on responsible persons; and (3) local and state agencies possibly to review the information provided on Form 5320.23 which is submitted as part of a Form 1, 4, or 5 application, conduct their own background checks, and determine whether to complete the certificate. These proposed provisions will have public safety benefits in that they will enable ATF to ensure that the responsible persons within legal entities that request to make or receive NFA firearms are not prohibited from possessing such firearms under federal, state, or local law.

2. Costs and Benefits of Ensuring Responsible Persons Within Legal Entities are Not Prohibited From Possessing NFA Firearms

ATF estimated the cost of the proposed provisions to ensure responsible persons within legal entities are not prohibited from possessing NFA firearms by: (1) Estimating the time and other resources that would be expended by legal entities to complete paperwork, obtain photographs and fingerprints, receive CLEO certificates, and send this information to ATF; (2) estimating the time and other resources that would be expended by ATF to process and review the materials provided by the legal entities and to conduct background checks of responsible persons; and (3) estimating costs for state and local agencies in the event they review the information provided, conduct their own background checks; and determine whether to complete the CLEO certificate.

ATF estimated the cost of the time for legal entities to complete these tasks using employee compensation data for September 2012 as determined by the U.S. Department of Labor, Bureau of Labor Statistics (BLS). *See http://www.bls.gov/news.release/archives/ecec_12112012.pdf.* The BLS determined the hourly compensation (which includes wages, salaries, and benefits) for civilian workers to be $30.80. In addition, ATF estimates that each legal entity has an average of two responsible persons, an estimate that is based on ATF's review of 39 recent randomly selected paper (hardcopy) applications for corporations, LLCs, and trusts. ATF welcomes comments from the industry and other members of the public regarding the accuracy of its assumptions and estimates.

In calendar year (CY) 2012, ATF received 84,435 applications that were either ATF Forms 1, 4, or 5. Of these, 40,700 applications were for unlicensed legal entities (e.g., corporations, companies, and trusts) to make or receive an NFA firearm; 29,448 were for

individuals to make or receive an NFA firearm; and 14,287 were for government agencies or qualified Federal firearms licensees (Gov/FFLs) to make or receive an NFA firearm. The numbers of applications, by Form and submitting individual or entity, are set forth below.

TABLE A—NUMBERS OF APPLICATIONS

CY 2012	Legal entity	Individual	Gov/FFL	Total
Form 1	5328	3758	576	9662
Form 4	35237	25102	4746	65085
Form 5	135	588	8965	9688
Total	40700	29448	14287	84435

Under the proposed rule, a legal entity would be required to complete the following steps in addition to completing the applicable Form 1, 4, or 5 before it is permitted to make or receive an NFA firearm:

1. Complete and submit proposed Form 5320.23 for each responsible person;

2. Submit fingerprints, photographs, and CLEO certificate for each responsible person; and

3. Submit a copy of the documentation that establishes the legal existence of the legal entity.

In addition, under the proposed rule, information required on the existing ATF Form 5330.20 would be incorporated into the ATF Forms 1, 4, and 5.

Cost to Legal Entities

Cost of Completion of a Responsible Person Form

The proposed rule would require legal entities to complete and submit to ATF a new form (Form 5320.23), photographs, fingerprint cards, and a CLEO certificate for each responsible person before the legal entity is permitted to make or receive an NFA firearm. The information required on Form 5320.23 would include the responsible person's name, position, home address, social security number (optional), date and place of birth, and country of citizenship. The identifying information for each responsible person is necessary in order for ATF, and possibly state and local law enforcement, to conduct a background check on each individual to ensure the individual is not prohibited from possessing an NFA firearm under federal, state, or local law.

ATF estimates the time for each responsible person to complete Form 5320.23 to be 10 minutes. Based on an estimate of 2 responsible persons per legal entity and 40,700 entities, the estimated annual cost of proposed Form 5320.23 is $417,854 (10 minutes at $30.80 per hour × 40,700 × 2).

Cost of Photographs

ATF estimates that:

• The cost of the photographs is $8.00 (cost based on the average of the costs determined for seven large retailers); and

• The time needed to procure photographs is 50 minutes.

Currently, only individuals must obtain and submit photographs to ATF. Based on an estimate of 29,448 individuals, the current estimated cost is $991,416. (Cost of Photographs = $8.00 × 29,448 = $235,584; Cost to Procure Photographs = 50 minutes at $30.80 per hour × 29,448 = $755,832). Under the proposed rule, costs for individuals would remain the same, but legal entities would incur new costs. Each responsible person of a legal entity would be required to obtain and submit photographs. Based on an estimate of 2 responsible persons per entity and 40,700 entities, the estimated cost for legal entities to obtain and submit photographs is $2,740,467. (Cost of Photographs = $8.00 × 40,700 × 2 = $651,200; Cost to Procure Photographs = 50 minutes at $30.80 per hour × 40,700 × 2 = $2,089,267).

Cost of Fingerprints

ATF has reviewed various fingerprinting services. At the present time, ATF is only able to accept fingerprints on hard copy fingerprint cards. Thus, the cost estimates are based on the submission of two fingerprint hard copy cards for each responsible person.

• The estimated cost of the fingerprints is $24.00 (cost based on the average of the costs determined for seven fingerprint services); and

• The estimated time needed to procure the fingerprints is 60 minutes.

Currently, only individuals must obtain and submit fingerprints. Based on an estimate of 29,448 individuals, the current estimated cost is $1,613,750. (Cost of Fingerprints = $24.00 × 29,448 = $706,752; Cost to Procure Fingerprints = 60 minutes at $30.80 per hour × 29,448 = $906,998). Under the proposed rule, costs for individuals would remain the same, but legal entities would incur new costs. Each responsible person of a legal entity would be required to obtain and submit fingerprints to ATF. Based on an estimate of 2 responsible persons per entity and 40,700 entities, the estimated cost for legal entities to obtain and submit fingerprints is $4,460,720. (Cost of Fingerprints = $24.00 × 40,700 × 2 = $1,953,600; Cost to Procure Fingerprints = 60 minutes at $30.80 per hour × 40,700 × 2 = $2,507,120).

Costs for a Legal Entity To Obtain CLEO Certificate

ATF estimates that the time needed for a responsible person to procure the CLEO certificate is 100 minutes (70 minutes travel time and 30 minutes review time with the CLEO). Based on an estimate of 2 responsible persons per legal entity and 40,700 entities, the estimated cost for legal entities to obtain CLEO certificate is $4,178,533 (100 minutes at $30.80 per hour × 40,700 × 2).

Cost of Documents To Establish Existence of Legal Entity

A legal entity that is applying to make or receive an NFA firearm must provide to ATF documentation evidencing the existence and validity of the entity—e.g., copies of partnership agreements, articles of incorporation, corporate registration, declarations of trust with any trust schedules, attachments, exhibits, and enclosures. Currently, legal entities may submit this documentation with their application package, although they are not required to do so. Therefore, ATF will treat the costs for documentation as new costs. ATF accepts, and will continue to accept, photocopies of the documents without notarization. ATF based the cost estimate by determining the average number of pages in the corporate or trust documents for 50 recent randomly selected paper (hardcopy) submissions, which was 15 pages.

ATF estimates that:

• The cost of the copied documentation is $1.50 ($.10 per page at 15 pages); and

• The time needed to copy attachments is 5 minutes.

Assuming 40,700 entities would provide ATF this documentation each year, the estimated annual cost to submit the documentation is $165,513. (Cost of documentation = $1.50 × 40,700 = $61,050; Cost to copy attachments = 5 minutes at $30.80 per hours × 40,700 = $104,463). This cost is not dependent on the number of responsible persons associated with a legal entity. ATF notes that the estimated cost is likely to be lower if the entity already has filed the documents with ATF as part of a recent making or transfer application and the information previously provided has not changed. Under these circumstances, the entity can certify to ATF that the documentation is on file and is unchanged.

Cost of Completing and Mailing Form 1, 4, or 5

Currently, both individuals and legal entities must complete and mail Form 1, 4, or 5. This proposed rule should not change the costs associated with this process. Even if there are multiple responsible persons associated with a legal entity, the legal entity still would be completing and mailing one Form 1, 4, or 5.

The estimated costs to legal entities that are discussed above are summarized in Tables B(1) and B(2). The total estimated new cost of the proposals for legal entities to provide to ATF identification information for each of its responsible persons is $11,963,087 annually.

TABLE B(1)—COST ESTIMATES OF THE TIME TO COMPLY WITH THE PROPOSED RULE'S REQUIREMENTS

Process	Estimated time (minutes)	Number of entities	2 Responsible persons
Completion of F 5320.23	10	40,700	$417,854
Procure Photographs	50	40,700	2,089,267
Procure Fingerprints	60	40,700	2,507,120
Obtain Certificate	100	40,700	4,178,533
Copy Attachments	5	40,700	104,463
Total			9,297,237

TABLE B(2)—COST ESTIMATES OF PROCURING PHOTOGRAPHS, FINGERPRINTS, AND DOCUMENTATION

Process-related item	Estimated cost	Number of entities	2 Responsible persons
Photographs	$8.00	40,700	$651,200
Fingerprints	24.00	40,700	1,953,600
Documentation of Legal Entity	1.50	40,700	61,050
Total			2,665,850

Cost to ATF

ATF incurs costs to process forms, fingerprint cards, photographs, and to conduct and review background checks. Currently, ATF incurs these costs for the 29,448 applications for individuals to make or receive NFA firearms. Under the proposed rule, ATF would incur these costs for applications for legal entities to make or receive NFA firearms. ATF estimates that:

• ATF's cost for FBI to process a set of fingerprints is $14.50. (The cost is based on FBI's current fee, which is set by statute on a cost recovery basis.)

• The estimated cost for an examiner at ATF's NFA Branch to conduct and review the results of a background check is $7.70 (15 minutes at $30.80 per hour); and

• The estimated cost to print the new 5320.23 forms is $.01 per form.

Based on an estimate of 2 responsible persons per legal entity and 40,700 entities, the estimated cost for ATF to process forms, fingerprint cards, photographs, and to conduct and review background checks for applications for legal entities to make or receive firearms is $1,807,894 annually. (Cost for processing fingerprints = $14.50 × 40,700 × 2 = $1,180,300; Cost for background checks = $7.70 × 40,700 × 2 = $626,780; Cost to print forms = $.01 × 40,700 × 2 = $814).

TABLE C—COSTS TO ATF UNDER PROPOSED RULE

Process	Estimated cost or time	Number of entities	2 Responsible persons
ATF's costs for Processing Fingerprints	$14.50	40,700	$1,180,300
Time Needed to Conduct and Review Background Check by ATF.	15 minutes	40,700	626,780
Cost of 5320.23 form	.01	40,700	814
Total			1,807,894

Cost to State and Local Agencies

The proposed requirement for each responsible person of a legal entity to obtain a CLEO certificate may increase the cost to state and local agencies as they may decide to review the information provided, conduct their own background checks, and determine whether to complete the certificate. Based on an estimate of 2 responsible persons per legal entity and 40,700 entities, the estimated cost for state and local agencies to determine whether to sign the CLEO certificate is $1,253,560 (30 minutes of review time at $30.80 per hour × 40,700 × 2).

TABLE D—COSTS TO STATE AND LOCAL AGENCIES UNDER PROPOSED RULE

Process	Estimated time	Number of entities	2 Responsible persons
Agency Costs to Review/Sign Certificate	30 minutes	40,700	$1,263,560
Total			1,263,560

Benefits of Background Checks for Responsible Persons

Existing regulations do not require the identification of responsible persons of a legal entity. Therefore, ATF lacks the necessary information to perform a background check on a person who meets this proposed rule's definition of ''responsible person'' to determine if that person is prohibited from possessing an NFA firearm. This proposed rule, if finalized, would provide important public safety and security benefits by enabling ATF to identify and perform background checks on such persons.

For example, there may be a number of responsible persons associated with a corporation, LLC, or trust. As noted above, based on a recent review of paper (hardcopy) applications for corporations, LLCs, and trusts, ATF estimates that there are 2 responsible persons associated with such legal entities. One or more of these persons could be a prohibited person, e.g., a convicted felon. Currently, when an NFA transfer application is approved, a corporate officer or trustee arranges for the receipt of the firearm. If the seller is a Federal firearms licensee, the officer or trustee must complete ATF Form 4473 (5300.9), *Firearms Transaction Record.* On the Form 4473, the officer or trustee must answer questions which determine if the officer or trustee is a prohibited person. If one of the officers or trustees is prohibited, then one of the other officers or trustees may pick up the firearm and complete the Form 4473. If the seller is not a licensee, then no form is completed. Once the firearm is picked up by the officer or trustee, then it becomes corporate or trust property and can be possessed by any of the officers or trustees. In Texas, ATF became aware of a situation in which the member of an LLC was an illegal alien, living in the United States under an assumed name, and had a felony warrant outstanding. At that time, the LLC had 19 firearms registered to it and ATF lacked the necessary information to conduct any background checks to determine whether the member was a prohibited person. In Tennessee, as a result of information provided by a Federal firearms licensee, ATF became aware of applications submitted to transfer two NFA firearms to a trust in which one of the trustees was a convicted felon. If there had been no referral, ATF would not have known of the need to conduct any background checks for the trust members to determine if any were prohibited persons. As a result, under current regulations, prohibited persons can circumvent the statutory prohibitions and receive and possess firearms. This proposed rule will make the requirements for background checks the same for certain legal entities as they are now for individuals.

3. Consolidation of Forms

The incorporation of the information required on ATF Form 5330.20 into the existing Forms 1, 4, and 5 will reduce the burden upon the applicant or transferee by eliminating an additional form to be completed and filed. The current estimated time to complete the form is 3 minutes. Because the information requested on the forms is the same, any savings result from the applicant not having to attach a separate form. ATF estimates the elimination of the form will reduce the industry costs by $108,028 (70,148 transactions for both individuals and legal entities × 3 minutes per form saved × $30.80 per hour) and ATF's printing costs by $701 (70,148 forms × .01 cents per form) for a total reduction in costs of $108,729.

4. Number of Legal Entities

ATF cannot estimate with reasonable precision what effect this proposed rule will have on resources used for creating and maintaining these entities. ATF seeks information from the public to measure this effect, including how many fewer legal entities there may be (if any), and how much it costs on average to create and maintain such entities.

B. Executive Order 13132

This proposed rule will not have substantial direct effects on the States, on the relationship between the Federal Government and the States, or on the distribution of power and responsibilities among the various levels of government.

While there would be an increase in the paperwork filed with ATF and an increase in the resources ATF devotes to processing that paperwork, as well as a potential increase in the resources state and local agencies may devote to processing CLEO certificates for responsible persons of a legal entity, any impact on state and local resources would be voluntary and expected to be minimal, and must be balanced against the benefits of ATF being able to identify and conduct background checks on such persons. Therefore, in accordance with section 6 of Executive Order 13132 (''Federalism''), the Attorney General has determined that this proposed regulation does not have sufficient federalism implications to warrant the preparation of a federalism summary impact statement.

C. Executive Order 12988

This proposed rule meets the applicable standards set forth in sections 3(a) and 3(b)(2) of Executive Order 12988 (''Civil Justice Reform'').

D. Regulatory Flexibility Act

The Regulatory Flexibility Act requires an agency to conduct a regulatory flexibility analysis of any rule subject to notice and comment rulemaking requirements unless the agency certifies that the rule will not have a significant economic impact on a substantial number of small entities. 5 U.S.C. 605(b). Small entities include small businesses, small not-for-profit enterprises, and small governmental jurisdictions. 5 U.S.C. 601. The Attorney

General has reviewed this proposed rule and, by approving it, certifies that this proposed rule will not have a significant economic impact on a substantial number of small entities.

This proposed rule will primarily affect legal entities that are seeking to make or acquire NFA firearms and are not making or acquiring them as a qualified Federal firearms licensee. ATF believes that the increased cost of implementing the proposed regulations will not be significant on the entities. The estimated annual cost of implementing the proposed regulations is $11,963,087 for identification costs for legal entities. Accordingly, the estimated cost increase per entity is $293.93 (Cost of increase ÷ 40,700 entities).

E. Small Business Regulatory Enforcement Fairness Act of 1996

This proposed rule is not a major rule as defined by section 251 of the Small Business Regulatory Enforcement Fairness Act of 1996. 5 U.S.C. 804. This proposed rule will not result in an annual effect on the economy of $100 million or more; a major increase in costs or prices; or significant adverse effects on competition, employment, investment, productivity, innovation, or on the ability of United States-based enterprises to compete with foreign-based enterprises in domestic and export markets.

F. Unfunded Mandates Reform Act of 1995

This proposed rule will not result in the expenditure by state, local, and tribal governments, in the aggregate, or by the private sector of $100 million or more in any one year, and it will not significantly or uniquely affect small governments. Therefore, no actions are deemed necessary under the provisions of the Unfunded Mandates Reform Act of 1995.

G. Paperwork Reduction Act

Under the Paperwork Reduction Act, a federal agency may not conduct or sponsor, and a person is not required to respond to, a collection of information unless it displays a valid control number assigned by OMB. This proposed rule would revise several existing information collections and create a new information collection. The existing information collections that would be revised are in 27 CFR 479.62, 479.63, 479.84, 479.85, 479.90, 479.90a, and 479.91, which are associated with ATF Forms 1, 4, and 5. Forms 1, 4, and 5 have been approved by the OMB under control numbers 1140–0011, 1140–0014, and 1140–0015, respectively. The new information collection that would be created is associated with ATF Form 5320.23. Form 5320.23 would require certain identifying information for each responsible person within a legal entity requesting to make or receive an NFA firearm, including their full name, position, social security number (optional), home address, date and place of birth, and country of citizenship. Form 5320.23 also would require a proper photograph of each responsible person; two properly completed FBI Forms FD–258 (Fingerprint Card) for each responsible person; and a law enforcement certificate.

ATF is submitting a request to revise currently approved OMB control numbers 1140–0011, 1140–0014, and 1140–0015, and to obtain a new OMB control number for ATF Form 5320.23 in accordance with 5 CFR 1320.11. ATF requests public comments on all aspects of these proposed collections, including to:

- Evaluate whether the proposed collection of information is necessary for the proper performance of the functions of the agency, including whether the information will have practical utility;
- evaluate the accuracy of the agency's estimate of the burden of the proposed collection of information, including the validity of the methodology and assumptions used;
- enhance the quality, utility, and clarity of the information to be collected; and
- minimize the burden of the collection of information on those who are to respond, including through the use of appropriate automated, electronic, mechanical, or other technological collection techniques or other forms of information technology, e.g., permitting electronic submission of responses.

The estimated total annual burden hours and related information (number of respondents, frequency of responses, costs, etc.) for the proposed revisions to Forms 1, 4, and 5, as well as the new Form 5320.23, appear below.

For a recent submission of an information collection request to the OMB regarding other changes to these forms, ATF performed an analysis of the time it takes to fulfill the requirements of each form. ATF found that the time varies among individuals, legal entities, and Gov/FFLs. For example, ATF estimates that it takes four hours for an individual to complete Form 1 due to the requirements to provide fingerprints, photographs and a law enforcement certificate. ATF estimates it takes less time for a Gov/FFL to complete Form 1 because the application does not require the submission of these items. The estimated submission times for individuals, legal entities, and Gov/FFLs are:

- 230 minutes for submission by an individual (50 minutes to procure photographs; 60 minutes to procure fingerprints, 100 minutes to obtain certificate; and 20 minutes to complete and mail the form);
- 465 minutes for a submission by a legal entity (for two responsible persons) (20 minutes to complete Form 5320.23; 100 minutes to procure photographs; 120 minutes to procure fingerprints; 200 minutes to obtain CLEO certificate; 5 minutes to procure the attachments; and 20 minutes to complete and mail the form); and
- 20 minutes (to complete and mail the form) for a submission by a Gov/FFL.

With respect to ATF Form 1:

Estimated total annual reporting and/or recordkeeping burden: 55,890 hours (current estimated total annual reporting and/or recordkeeping burden from OMB Information Collection Number 1140–0011: 4,284 hours). Note: 576 Gov/FFL responders will take 20 minutes (192 hours); 5,328 legal entity responders will take 465 minutes (41,292 hours); and 3,758 individual responders will take 230 minutes (14,406 hours). (The numbers of responders by type are estimated based on the data in Table A.)

Estimated average burden hours per respondent and/or recordkeeper: 5.78 hours (current estimated average burden hours per respondent or recordkeeper from OMB Information Collection Number 1140–0011: 4 hours).

Estimated number of respondents and/or recordkeepers: 9,662 (current estimated number of respondents and/or recordkeepers from OMB Information Collection Number 1140–0011: 1,071).

Estimated annual frequency of responses: 1 (current estimated annual frequency of responses from OMB Information Collection Number 1140–0011: 1).

Estimated total costs: $487,757.60.

$461,248 (fingerprints and photographs ($32 × 3,758 (individuals) = $120,256; $32 × 10,656 (2 responsible persons) = $340,992))

$7,992 (copies of legal entity documents ($1.50 × 5,328))

$18,517.60 (mailing ($2 each for 9,086 respondents and $.60 for 576 respondents) (current estimated total costs from OMB Information Collection Number 1140–0011: $471).

With respect to ATF Form 4:

Estimated total annual reporting and/or recordkeeping burden: 370,893 hours

(current estimated total annual reporting and/or recordkeeping burden from OMB Information Collection Number 1140–0014: 44,260 hours). Note: 4,746 Gov/FFL respondents will take 20 minutes (1,582 hours), 35,237 legal entity respondents will take 465 minutes (273,087 hours), and 25,102 individual respondents will take 230 minutes (96,224 hours). (The numbers of responders by type are estimated based on the data in Table A.)

Estimated average burden hours per respondent and/or recordkeeper: 5.69 hours (current estimated average burden hours per respondent and/or recordkeeper from OMB Information Collection Number 1140–0014: 4 hours).

Estimated number of respondents and/or recordkeepers: 65,085 (current estimated number of respondents and/or recordkeepers from OMB Information Collection Number 1140–0014: 11,065).

Estimated annual frequency of responses: 1 (current estimated annual frequency of responses from OMB Information Collection Number 1140–0014: 1).

Estimated total costs: $3,234,813.

$3,058,432 (fingerprints and photographs ($32 × 25,102 (individuals) = $803,264; $32 × 70,474 (2 responsible persons) = $2,255,168))

$52,855.50 (copies of legal entity documents ($1.50 × 35,237))

$123,525.60 (mailing ($2 each for 60,339 respondents and $.60 for 4,746 respondents) (current estimated total costs from OMB Information Collection Number 1140–0014: $4,536).

With respect to ATF Form 5:

Estimated total annual reporting and/or recordkeeping burden: 6,288 hours (current estimated total annual reporting and/or recordkeeping burden from OMB Information Collection Number 1140–0015: 379,896 hours).[3] Note: 8,965 Gov/FFL respondents will take 20 minutes (2,988 hours); 135 legal entity respondents will take 465 minutes (1,046 hours); and 588 individual respondents will take 230 minutes (2,254 hours). (The numbers of responders by type are estimated based on the data in Table A.)

Estimated average burden hours per respondent and/or recordkeeper: .65 hours (current estimated average burden hours per respondent and/or recordkeeper from OMB Information Collection Number 1140–0015: 4 hours).

Estimated number of respondents and/or recordkeepers: 9,688 (current estimated number of respondents and/or recordkeepers from OMB Information Collection Number 1140–0015: 7,888).

Estimated annual frequency of responses: 1 (current estimated annual frequency of responses from OMB Information Collection Number 1140–0015: 12).

Estimated total costs: $34,483.50.

$27,456 (fingerprints and photographs ($32 × 588 (individuals) = $18,816; $32 × 270 (2 responsible persons) = $8,640))

$202.50 (copies of legal entity documents ($1.50 × 135))

$6,825 (mailing ($2 each for 723 respondents and $.60 for 8,965 respondents)) (current estimated total costs from OMB Information Collection Number 1140–0015: $20,894).

With respect to ATF Form 5320.23:

Estimated total annual reporting and/or recordkeeping burden: 13,566.67 hours (based on 2 responsible persons).

Estimated average burden hours per respondent and/or recordkeeper: .33 hours.

Estimated number of respondents and/or recordkeepers: 40,700.

Estimated annual frequency of responses: 1.

Estimated total costs: 0. (All the estimated costs are associated with the submission package for Forms 1, 4, and 5.)

The current estimated costs provided above for Forms 1, 4, and 5 are being revised. Due to an administrative oversight, the initial costs provided to OMB only reflected the costs associated with mailing the completed forms to ATF. They did not include the costs associated with certain information that must be included as part of the application, e.g., fingerprint cards. ATF has provided OMB with the adjusted cost estimates for these forms.

Public Participation

A. Comments Sought

ATF is requesting comments on the proposed rule from all interested persons. ATF is also specifically requesting comments on the clarity of this proposed rule and how it may be made easier to understand, as well as comments on the costs or benefits of the proposed rule and on the appropriate methodology and data for calculating those costs and benefits.

All comments must reference the docket number (ATF 41P), be legible, and include the commenter's name and complete mailing address. ATF will treat all comments as originals and will not acknowledge receipt of comments.

Comments received on or before the closing date will be carefully considered. Comments received after that date will be given the same consideration if it is practical to do so, but assurance of consideration cannot be given except as to comments received on or before the closing date.

B. Confidentiality

Comments, whether submitted electronically or on paper, will be made available for public viewing at ATF, and on the Internet as part of the eRulemaking initiative, and are subject to the Freedom of Information Act. Commenters who do not want their name or other personal identifying information posted on the Internet should submit their comment by mail or facsimile, along with a separate cover sheet that contains their personal identifying information. Both the cover sheet and comment must reference this docket number (ATF 41P). Information contained in the cover sheet will not be posted on the Internet. Any personal identifying information that appears within the comment will be posted on the Internet and will not be redacted by ATF.

Any material that the commenter considers to be inappropriate for disclosure to the public should not be included in the comment. Any person submitting a comment shall specifically designate that portion (if any) of his comments that contains material that is confidential under law (e.g., trade secrets, processes). Any portion of a comment that is confidential under law shall be set forth on pages separate from the balance of the comment and shall be prominently marked ''confidential'' at the top of each page. Confidential information will be included in the rulemaking record but will not be disclosed to the public. Any comments containing material that is not confidential under law may be disclosed to the public. In any event, the name of the person submitting a comment is not exempt from disclosure.

C. Submitting Comments

Comments may be submitted in any of three ways:

- *Mail:* Send written comments to the address listed in the **ADDRESSES** section of this document. Written comments must appear in minimum 12 point font size (.17 inches), include your mailing address, be signed, and may be of any length.
- *Facsimile:* You may submit comments by facsimile transmission to (202) 648–9741. Faxed comments must:

(1) Be legible and appear in minimum 12 point font size (.17 inches);

[3] The large drop in burden hours from 379,896 to 6,288 is attributable to a change in methodology. We no longer count each item on a Form 5 as a separate response. The current burden hours using the new methodology is 4,380 hours ((7,388 government agencies or legal entities × 20 minutes and ÷ 60) plus (500 individual respondents × 230 minutes and ÷ 60)).

(2) Be on 8½″ x 11″ paper;

(3) Contain a legible, written signature; and

(4) Be no more than five pages long. ATF will not accept faxed comments that exceed five pages.

• *Federal eRulemaking Portal:* To submit comments to ATF via the Federal eRulemaking portal, visit *http://www.regulations.gov* and follow the instructions for submitting comments.

D. Request for Hearing

Any interested person who desires an opportunity to comment orally at a public hearing should submit his or her request, in writing, to the Director of ATF within the 90-day comment period. The Director, however, reserves the right to determine, in light of all circumstances, whether a public hearing is necessary.

Disclosure

Copies of this proposed rule and the comments received will be available for public inspection through the Federal eGovernment portal, *http://www.regulations.gov,* or by appointment during normal business hours at the ATF Reading Room, Room 1E–062, 99 New York Avenue NE., Washington, DC 20226; telephone: (202) 648–8740.

Drafting Information

The author of this document is Brenda Raffath Friend, Office of Regulatory Affairs, Enforcement Programs and Services, Bureau of Alcohol, Tobacco, Firearms, and Explosives.

List of Subjects in 27 CFR Part 479

Administrative practice and procedure, Arms and munitions, Authority delegations, Customs duties and inspection, Exports, Imports, Military personnel, Penalties, Reporting and recordkeeping requirements, Research, Seizures and forfeitures, and Transportation.

Authority and Issuance

Accordingly, for the reasons discussed in the preamble, 27 CFR part 479 is proposed to be amended as follows:

PART 479—MACHINE GUNS, DESTRUCTIVE DEVICES, AND CERTAIN OTHER FIREARMS

■ 1. The authority citation for 27 CFR part 479 is revised to read as follows:

Authority: 26 U.S.C. 5812; 26 U.S.C. 5822; 26 U.S.C. 7805.

■ 2. Amend § 479.11, by revising the definition for ''Person'' and adding a definition for the term ''Responsible person'' to read as follows:

§ 479.11 Meaning of terms.

* * * * *

Person. A partnership, company, association, trust, corporation, including each responsible person associated with such an entity; an estate; or an individual.

* * * * *

Responsible person. (1) In the case of a trust, any individual, including any grantor, trustee, or beneficiary, who possesses, directly or indirectly, the power or authority under any trust instrument or other document, or under state law, to receive, possess, ship, transport, deliver, transfer, or otherwise dispose of a firearm for, or on behalf of, the trust;

(2) In the case of a partnership, any individual, including any partner or manager, who possesses, directly or indirectly, the power or authority under any contract, agreement, article, certificate, bylaw, or instrument, or under state law, to direct the management and policies of the partnership to receive, possess, ship, transport, deliver, transfer, or otherwise dispose of a firearm for, or on behalf of, the partnership;

(3) In the case of an association, any individual, including any member, officer, director, board member, owner, or manager, who possesses, directly or indirectly, the power or authority under any contract, agreement, article, certificate, bylaw, or instrument, or under state law, to direct the management and policies of the association to receive, possess, ship, transport, deliver, transfer, or otherwise dispose of a firearm for, or on behalf of, the association;

(4) In the case of a company (including a Limited Liability Company (LLC)), any individual, including any member, officer, director, board member, owner, shareholder, or manager, who possesses, directly or indirectly, the power or authority under any contract, agreement, article, certificate, bylaw, or instrument, or under state law, to direct the management and policies of the company to receive, possess, ship, transport, deliver, transfer, or otherwise dispose of a firearm for, or on behalf of, the company; and

(5) In the case of a corporation, any individual, including any officer, director, board member, owner, shareholder, or manager, who possesses, directly or indirectly, the power or authority under any contract, agreement, article, certificate, bylaw, or instrument, or under state law, to direct the management and policies of the corporation to receive, possess, ship, transport, deliver, transfer, or otherwise dispose of a firearm for, or on behalf of, the corporation.

* * * * *

■ 3. Revise § 479.62 to read as follows:

§ 479.62 Application to make.

(a) *General.* No person shall make a firearm unless the person has filed with the Director a completed application on ATF Form 1 (5320.1), Application to Make and Register a Firearm, in duplicate, executed under the penalties of perjury, to make and register the firearm and has received the approval of the Director to make the firearm, which approval shall effectuate registration of the firearm to the applicant. If the applicant is not a licensed manufacturer, importer, or dealer qualified under this part and is a partnership, company (including a Limited Liability Company (LLC)), association, trust, or corporation, all information on the Form 1 application shall be furnished for each responsible person of the applicant.

(b) *Preparation of ATF Form 1.* All of the information called for on Form 1 shall be provided, including:

(1) The type of application, i.e., tax paid or tax exempt. If the making of the firearm is taxable, the applicant shall submit a remittance in the amount of $200 with the application in accordance with the instructions on the form;

(2) The identity of the applicant. If an individual, the applicant shall provide his or her name, address, and date and place of birth, and also comply with the identification requirements prescribed in § 479.63(a). If other than an individual, the applicant shall provide its name, address, and employer identification number, as well as the name and address of each responsible person. Each responsible person of the applicant also shall comply with the identification requirements prescribed in § 479.63(b);

(3) A description of the firearm to be made by type, caliber, gauge or size, model, length of barrel, serial number, other marks of identification, and the name and address of the original manufacturer (if the applicant is not the original manufacturer);

(4) The applicant's Federal firearms license number (if any);

(5) The applicant's special (occupational) tax stamp (if applicable); and

(6) If the applicant (including, if other than an individual, any responsible person) is an alien admitted under a nonimmigrant visa, applicable documentation demonstrating that the

nonimmigrant alien falls within an exception to 18 U.S.C. 922(g)(5)(B) under 18 U.S.C. 922(y)(2) or has obtained a waiver of that provision under 18 U.S.C. 922(y)(3).

(c) *Approval of Form 1.* If the application is approved, the Director will affix a National Firearms Act stamp to the original application in the space provided therefor and properly cancel the stamp (see § 479.67). The approved application will then be returned to the applicant.

■ 4. Revise § 479.63 to read as follows:

§ 479.63 Identification of applicant.

(a) If the applicant is an individual, the applicant shall:

(1) Securely attach to each copy of the Form 1, in the space provided on the form, a photograph of the applicant 2 x 2 inches in size, clearly showing a full front view of the features of the applicant with head bare, with the distance from the top of the head to the point of the chin approximately 1¼ inches, and which shall have been taken within 1 year prior to the date of the application;

(2) Attach to the application two properly completed FBI Forms FD–258 (Fingerprint Card). The fingerprints must be clear for accurate classification and should be taken by someone properly equipped to take them; and

(3) Have a certificate completed on each copy of the Form 1 by the local chief of police, sheriff of the county, head of the state police, state or local district attorney or prosecutor, or such other person whose certificate may in a particular case be acceptable to the Director, for the jurisdiction in which the individual resides. The certificate shall state that the certifying official is satisfied that the fingerprints and photograph accompanying the application are those of the applicant and that the certifying official has no information indicating that possession of the firearm by the maker would be in violation of state or local law.

(b) If the applicant is not a licensed manufacturer, importer, or dealer qualified under this part and is a partnership, company (including a Limited Liability Company (LLC)), association, trust, or corporation, the applicant shall:

(1) Be identified on the Form 1 by the name and exact location of the place of business, including the name and number of the building and street, and the name of the county in which the business is located or, in the case of a trust, the address where the firearm is located. In the case of two or more locations, the address shown shall be the principal place of business (or principal office, in the case of a corporation) or, in the case of a trust, the principal address at which the firearm is located;

(2) Except as provided in paragraph (c) of this section, attach to the application—

(i) Documentation evidencing the existence and validity of the entity, which includes complete and unredacted copies of partnership agreements, articles of incorporation, corporate registration, declarations of trust with any trust schedules, attachments, exhibits, and enclosures;

(ii) A completed ATF Form 5320.23 for each responsible person. Form 5320.23 requires certain identifying information, including each responsible person's full name, position, social security number (optional), home address, date and place of birth, and country of citizenship;

(iii) In the space provided on Form 5320.23, a photograph of each responsible person 2 x 2 inches in size, clearly showing a full front view of the features of the responsible person with head bare, with the distance from the top of the head to the point of the chin approximately 1¼ inches, and which shall have been taken within 1 year prior to the date of the application;

(iv) Two properly completed FBI Forms FD–258 (Fingerprint Card) for each responsible person. The fingerprints must be clear for accurate classification and should be taken by someone properly equipped to take them; and

(v) In the space provided on Form 5320.23, a certificate completed by the local chief of police, sheriff of the county, head of the state police, state or local district attorney or prosecutor, or such other person whose certificate may in a particular case be acceptable to the Director, for the jurisdiction in which the responsible person resides. The certificate shall state that the certifying official is satisfied that the fingerprints and photograph accompanying the form are those of the responsible person and that the certifying official has no information indicating that possession of the firearm by the responsible person would be in violation of state or local law.

(c) If the applicant entity has had an application approved as a maker or transferee within the preceding 24 months, and there has been no change to the documentation previously provided, the entity may provide a certification that the information has not been changed since the prior approval and shall identify the application for which the documentation had been submitted by form number, serial number, and date approved.

■ 5. Revise § 479.84 to read as follows:

§ 479.84 Application to transfer.

(a) *General.* Except as otherwise provided in this subpart, no firearm may be transferred in the United States unless an application, Form 4 (5320.4), Application for Tax Paid Transfer and Registration of Firearm, in duplicate, executed under the penalties of perjury, to transfer the firearm and register it to the transferee has been filed with and approved by the Director. The application shall be filed by the transferor. If the transferee is not a licensed manufacturer, importer, or dealer qualified under this part and is a partnership, company (including a Limited Liability Company (LLC)), association, trust, or corporation, all information on the Form 4 application shall be furnished for each responsible person of the transferee.

(b) *Preparation of ATF Form 4.* All of the information called for on Form 4 shall be provided, including:

(1) The type of firearm being transferred. If the firearm is other than one classified as ''any other weapon,'' the applicant shall submit a remittance in the amount of $200 with the application in accordance with the instructions on the form. If the firearm is classified as ''any other weapon,'' the applicant shall submit a remittance in the amount of $5;

(2) The identity of the transferor by name and address and, if the transferor is other than a natural person, the title or legal status of the person executing the application in relation to the transferor;

(3) The transferor's Federal firearms license number (if any);

(4) The transferor's special (occupational) tax stamp (if any);

(5) The identity of the transferee by name and address and, if the transferee is a person not qualified as a manufacturer, importer, or dealer under this part, the transferee shall be further identified in the manner prescribed in § 479.85;

(6) The transferee's Federal firearms license number (if any);

(7) The transferee's special (occupational) tax stamp (if any); and

(8) A description of the firearm to be transferred by name and address of the manufacturer or importer (if known); caliber, gauge, or size; model; serial number; in the case of a short-barreled shotgun or a short-barreled rifle, the length of the barrel; in the case of a weapon made from a rifle or shotgun, the overall length of the weapon and the length of the barrel; and any other

identifying marks on the firearm. In the event the firearm does not bear a serial number, the applicant shall obtain a serial number from ATF and shall stamp (impress) or otherwise conspicuously place such serial number on the firearm in a manner not susceptible of being readily obliterated, altered, or removed.

(9) If the applicant (including, if other than an individual, any responsible person) is an alien admitted under a nonimmigrant visa, applicable documentation demonstrating that the nonimmigrant alien falls within an exception to 18 U.S.C. 922(g)(5)(B) under 18 U.S.C. 922(y)(2) or has obtained a waiver of that provision under 18 U.S.C. 922(y)(3).

(c) *Approval of Form 4.* If the application is approved, the Director will affix a National Firearms Act stamp to the original application in the space provided therefor and properly cancel the stamp (see § 479.87). The approved application will then be returned to the transferor.

■ 6. Revise § 479.85 to read as follows:

§ 479.85 Identification of transferee.

(a) If the transferee is an individual, such person shall:

(1) Securely attach to each copy of the Form 4, in the space provided on the form, a photograph of the applicant 2 x 2 inches in size, clearly showing a full front view of the features of the applicant with head bare, with the distance from the top of the head to the point of the chin approximately 1¼ inches, and which shall have been taken within 1 year prior to the date of the application;

(2) Attach to the application two properly completed FBI Forms FD–258 (Fingerprint Card). The fingerprints must be clear for accurate classification and should be taken by someone properly equipped to take them; and

(3) Have a certificate completed on each copy of the Form 4 by the local chief of police, sheriff of the county, head of the state police, state or local district attorney or prosecutor, or such other person whose certificate may in a particular case be acceptable to the Director, for the jurisdiction in which the individual resides. The certificate shall state that the certifying official is satisfied that the fingerprints and photograph accompanying the application are those of the applicant and that the certifying official has no information indicating that receipt or possession of the firearm by the transferee would be in violation of state or local law.

(b) If the transferee is not a licensed manufacturer, importer, or dealer qualified under this part and is a partnership, company, association, trust, or corporation, such person shall:

(1) Be identified on the Form 4 by the name and exact location of the place of business, including the name and number of the building and street, and the name of the county in which the business is located or, in the case of a trust, the address where the firearm is located. In the case of two or more locations, the address shown shall be the principal place of business (or principal office, in the case of a corporation) or, in the case of a trust, the principal address at which the firearm is located;

(2) Except as provided in paragraph (c) of this section, attach to the application—

(i) Documentation evidencing the existence and validity of the entity, which includes complete and unredacted copies of partnership agreements, articles of incorporation, corporate registration, declarations of trust with any trust schedules, attachments, exhibits, and enclosures;

(ii) A completed ATF Form 5320.23 for each responsible person. Form 5320.23 requires certain identifying information, including the responsible person's full name, position, social security number (optional), home address, date and place of birth, and country of citizenship;

(iii) In the space provided on Form 5320.23, a photograph of each responsible person 2 x 2 inches in size, clearly showing a full front view of the features of the responsible person with head bare, with the distance from the top of the head to the point of the chin approximately 1¼ inches, and which shall have been taken within 1 year prior to the date of the application;

(iv) Two properly completed FBI Forms FD–258 (Fingerprint Card) for each responsible person. The fingerprints must be clear for accurate classification and should be taken by someone properly equipped to take them; and

(v) In the space provided on Form 5320.23, a certificate completed by the local chief of police, sheriff of the county, head of the state police, state or local district attorney or prosecutor, or such other person whose certificate may in a particular case be acceptable to the Director, for the jurisdiction in which the responsible person resides. The certificate shall state that the certifying official is satisfied that the fingerprints and photograph accompanying the form are those of the responsible person and that the certifying official has no information indicating that receipt or possession of the firearm by the transferee would be in violation of state or local law.

(c) If the applicant entity has had an application approved as a maker or transferee within the preceding 24 months, and there has been no change to the documentation previously provided, the entity may provide a certification that the information has not been changed since the prior approval and shall identify the application for which the documentation had been submitted by form number, serial number, and date approved.

■ 7. Revise § 479.90 to read as follows:

§ 479.90 Estates.

(a) The executor, administrator, personal representative, or other person authorized under state law to dispose of property in an estate (collectively ''executor'') may possess a firearm registered to a decedent during the term of probate without such possession being treated as a ''transfer'' as defined in § 479.11. No later than the close of probate, the executor must submit an application to transfer the firearm to beneficiaries or other transferees in accordance with this section. If the transfer is to a beneficiary, the executor shall file an ATF Form 5 (5320.5), Application for Tax Exempt Transfer and Registration of Firearm, to register a firearm to any beneficiary of an estate in accordance with § 479.90. The executor will identify the estate as the transferor, and will sign the form on behalf of the decedent, showing his or her title and the date of filing. The executor must also provide the documentation prescribed in paragraph (c) of this section.

(b) If there are no beneficiaries of the estate or the beneficiaries do not wish to possess the registered firearm, the executor will dispose of the property outside the estate (i.e., to a non-beneficiary). The executor shall file an ATF Form 4 (5320.4), Application for Tax Paid Transfer and Registration of Firearm, in accordance with § 479.84. The executor, administrator, personal representative, or other authorized person must also provide documentation prescribed in paragraph (c) of this section.

(c) The executor, administrator, personal representative, or other person authorized under state law to dispose of property in an estate shall submit with the transfer application documentation of his or her appointment as executor, administrator, personal representative, or as an authorized person, a copy of the decedent's death certificate, a copy of the will (if any), any other evidence of his or her authority to dispose of property, and any other document

relating to, or affecting the disposition of firearms from the estate.

Dated: August 29, 2013.

Eric H. Holder, Jr.,

Attorney General.

[FR Doc. 2013–21661 Filed 9–6–13; 8:45 am]

BILLING CODE 4410–FY–P

ENVIRONMENTAL PROTECTION AGENCY

40 CFR Parts 52

[EPA–R06–OAR–2010–0333; FRL–9900–83–Region 6]

Approval and Promulgation of Implementation; Texas; Houston: Reasonable Further Progress Plan, Contingency Measures, and Transportation Conformity Budgets for the 1997 8-Hour Severe Ozone Nonattainment Area

AGENCY: Environmental Protection Agency (EPA).

ACTION: Proposed rule.

SUMMARY: The EPA is proposing to approve revisions to the Texas State Implementation Plan to the emissions inventory (EI), the reasonable further progress (RFP) plan and contingency measures, the vehicle miles traveled (VMT) offset analysis, and transportation conformity motor vehicle emissions budgets associated with the reasonable further progress portion of these revisions. The EPA is proposing to approve these revisions because they satisfy the EI, the RFP, the VMT offset, and transportation conformity requirements for areas classified as severe nonattainment for the 1997 8-hour ozone national ambient air quality standard and demonstrate further progress in reducing ozone precursors.

DATES: Comments must be received on or before October 9, 2013.

ADDRESSES: Submit your comments, identified by Docket ID No. EPA–R06–OAR–2010–0333, by one of the following methods:

- *Federal Rulemaking Portal: http://www.regulations.gov.* Follow the on-line instructions for submitting comments.
- *U.S. EPA Region 6 ''Contact Us'' Web site: http://epa.gov/region6/r6coment.htm.* Please click on ''6PD'' (Multimedia) and select ''Air'' before submitting comments.
- *Email:* Mr. Guy Donaldson at *donaldson.guy@epa.gov.* Please also send a copy by email to the person listed in the **FOR FURTHER INFORMATION CONTACT** section below.
- *Fax:* Mr. Guy Donaldson, Chief, Air Planning Section (6PD–L), at fax number 214–665–7263.
- *Mail:* Mr. Guy Donaldson, Chief, Air Planning Section (6PD–L), Environmental Protection Agency, 1445 Ross Avenue, Suite 1200, Dallas, Texas 75202–2733.
- *Hand or Courier Delivery:* Mr. Guy Donaldson, Chief, Air Planning Section (6PD–L), Environmental Protection Agency, 1445 Ross Avenue, Suite 1200, Dallas, Texas 75202–2733. Such deliveries are accepted only between the hours of 8:00 a.m. and 4:00 p.m. weekdays except for legal holidays. Special arrangements should be made for deliveries of boxed information.

Instructions: Direct your comments to Docket ID No. EPA–R06–OAR–2010–0333. The EPA's policy is that all comments received will be included in the public docket without change and may be made available online at *www.regulations.gov,* including any personal information provided, unless the comment includes information claimed to be Confidential Business Information (CBI) or other information whose disclosure is restricted by statute. Do not submit through *www.regulations.gov* or email, information that you consider to be CBI or otherwise protected. The *www.regulations.gov* Web site is an ''anonymous access'' system, which means the EPA will not know your identity or contact information unless you provide it in the body of your comment. If you send an email comment directly to EPA without going through *www.regulations.gov,* your email address will be automatically captured and included as part of the comment that is placed in the public docket and made available on the Internet. If you submit an electronic comment, the EPA recommends that you include your name and other contact information in the body of your comment and with any disk or CD–ROM you submit. If the EPA cannot read your comment due to technical difficulties and cannot contact you for clarification, the EPA may not be able to consider your comment. Electronic files should avoid the use of special characters, any form of encryption, and be free of any defects or viruses. For additional information about the EPA's public docket visit the EPA Docket Center homepage at *http://www.epa.gov/epahome/dockets.htm.*

Docket: All documents in the docket are listed in the *www.regulations.gov* index. Although listed in the index, some information is not publicly available, e.g., CBI or other information whose disclosure is restricted by statute. Certain other material, such as copyrighted material, will be publicly available only in hard copy. Publicly available docket materials are available either electronically in *www.regulations.gov* or in hard copy at the Air Planning Section (6PD–L), Environmental Protection Agency, 1445 Ross Avenue, Suite 700, Dallas, Texas 75202–2733. The file will be made available by appointment for public inspection in the Region 6 FOIA Review Room between the hours of 8:30 a.m. and 4:30 p.m. weekdays except for legal holidays. Contact the person listed in the **FOR FURTHER INFORMATION CONTACT** paragraph below to make an appointment. If possible, please make the appointment at least two working days in advance of your visit. There will be a fee of 15 cents per page for making photocopies of documents. On the day of the visit, please check in at the EPA Region 6 reception area at 1445 Ross Avenue, Suite 700, Dallas, Texas.

The State submittal, which is part of the EPA record, is also available for public inspection at the State Air Agency listed below during official business hours by appointment: Texas Commission on Environmental Quality, Office of Air Quality, 12124 Park 35 Circle, Austin, Texas 78753.

FOR FURTHER INFORMATION CONTACT: Ms. Sandra Rennie, Air Planning Section (6PD–L), Environmental Protection Agency, Region 6, 1445 Ross Avenue, Suite 700, Dallas, Texas 75202–2733, telephone (214) 665–7367; fax number (214) 665–7263; email address *rennie.sandra@epa.gov.*

SUPPLEMENTARY INFORMATION: Throughout this document, ''we,'' ''us,'' and ''our'' means EPA.

Table of Contents

I. What action is EPA proposing?
II. What is the background for this action?
III. What is EPA's evaluation of the revisions?
A. Base Year Emissions Inventory
B. Adjusted Base Year Inventory and 2008 RFP Target Levels
C. Projected Inventories and Determination of RFP
D. Control Measures and Emission Reductions for RFP
E. Contingency Measures
F. Vehicle Miles Traveled Offset Analysis
G. Transportation Conformity Budgets
IV. Proposed Action
V. Statutory and Executive Order Reviews

I. What action is EPA proposing?

The EPA is proposing to approve a revision to the Texas State Implementation Plan (SIP) for the Houston-Galveston-Brazoria (HGB) ozone nonattainment area submitted by the Texas Commission on Environmental Quality on April 1, 2010,

and an updated revision using the MOVES2010a [1] mobile model submitted on May 6, 2013. We are proposing to approve the following SIP elements: The revised emission inventory (EI); the reasonable further progress plan (RFP) and contingency measures; the vehicle miles traveled (VMT) offset analysis; and the associated motor vehicle emission budget (MVEB) for transportation conformity. The SIP revision satisfies the EI, RFP, VMT offset, and MVEB requirements for areas classified as severe nonattainment for the 1997 8-hour ozone national ambient air quality standard (NAAQS) and demonstrates reasonable further progress in reducing ozone precursors. We are proposing to take this action pursuant to section 110 and part D of the Clean Air Act (Act or CAA) and EPA's regulations.

II. What is the background for this action?

In 1997 (62 FR 38856), the EPA revised the health-based NAAQS for ozone, setting it at 0.08 parts per million (ppm) averaged over an 8-hour time frame. The EPA set the 8-hour ozone standard based on scientific evidence demonstrating that ozone causes adverse health effects at lower ozone concentrations and over a longer period of time than was understood when the pre-existing 1-hour ozone standard was set. The EPA determined that the 8-hour standard would be more protective of human health, especially children and adults who are active outdoors, and individuals with a pre-existing respiratory disease, such as asthma.

On April 30, 2004 (69 FR 23858), the EPA finalized its attainment/nonattainment designations for areas across the country with respect to the 8-hour ozone standard. These actions became effective on June 15, 2004. Among those areas designated as nonattainment is HGB.

This designation triggered the CAA's section 110(a)(1) requirement that states must submit attainment demonstrations for their nonattainment areas to the EPA by no later than three years after the promulgation of the NAAQS. Accordingly, EPA's phase I 8-hour ozone implementation rule (Phase I Rule), published on April 30, 2004 (69 FR 23951), specified that states must submit attainment demonstrations for their nonattainment areas to the EPA by no later than three years from the effective date of designation, that is, by June 15, 2007.

Pursuant to the Phase 1 rule, an area was classified under subpart 2 of the CAA based on its 8-hour design value if that area had a 1-hour design value at or above 0.121 ppm (the lowest 1-hour design value in Table 1 of subpart 2). Based on this criterion, the HGB nonattainment area was classified as a moderate nonattainment area.

On November 29, 2005 (70 FR 71612), and as revised on June 8, 2007 (72 FR 31727), EPA published the final Phase 2 Rule for implementation of the 8-hour standard (Phase 2 rule). The Phase 2 rule addressed the RFP control and planning obligations as they apply to areas designated nonattainment for the 1997 8-hour ozone NAAQS.

Among other things, the Phase 1 and Phase 2 rules outline the SIP requirements and deadlines for various requirements in areas designated as moderate and above nonattainment. The rule further requires that modeling and attainment demonstrations, RFP plans, reasonably available control measures (RACM), projection year emission inventories, MVEB, and contingency measures were all due by June 15, 2007 (See 40 CFR 51.908(a), (c)).

Section 182(b)(1) of the CAA and EPA's 1997 8-hour ozone implementation rule (40 CFR 51.910) require each 8-hour ozone nonattainment area designated moderate and above to submit an EI and RFP plan, for review and approval into its SIP, that describe how the area will achieve actual emissions reductions of VOC and NO_X from a baseline emissions inventory.

On June 15, 2007, the EPA received a request from Texas Governor Perry seeking voluntary reclassification of the HGB nonattainment area from moderate to severe nonattainment under the 1997 8-hour ozone standard. The EPA reclassified the eight-county HGB area from a moderate to a severe nonattainment area for the 1997 eight-hour ozone National Ambient Air Quality Standard (NAAQS) effective on October 31, 2008. (73 FR 56983). Reclassification of the HGB area to severe required Texas to develop and submit a revised RFP SIP and a VMT offset analysis.

III. What is EPA's evaluation of the revisions?

The EPA's analysis and findings are discussed in this proposed rulemaking. A more detailed discussion is contained in the Technical Support Document (TSD) for this Proposal, which is available on line at *http://www.regulations.gov,* Docket number EPA–R06–OAR–2010–0333.

On April 1, 2010, Texas submitted an updated emission inventory, a plan demonstrating 18 percent RFP for the period 2002–2008, contingency measures for RFP, and on-road VOC and NO_X MVEBs. In addition, the RFP demonstrated 9% reductions from 2009 through 2011; 9% reductions from 2012 through 2014; 9% reductions from 2015 through 2017; 3% reductions in 2018; and 3% reductions in 2019 for contingency purposes. These accompanied an attainment demonstration which is the subject of a separate rulemaking. These SIP revisions were subject to notice and comment by the public, and the State of Texas addressed the comments received on the proposed SIP revisions. The State revised the EI and the RFP in a submittal dated May 6, 2013, using EPA's MOVES2010a mobile model in place of MOBILE6 that was used in the 2010 submittal.

A. Base Year Emissions Inventory

An emissions inventory is a comprehensive, accurate, current inventory of actual emissions from all sources of the relevant pollutant or pollutants in an area and is required by section 172(c)(3) of the CAA. For ozone nonattainment areas, the emissions inventory needs to contain VOC and NO_X emissions because these pollutants are precursors to ozone formation. In the Phase 2 implementation rule, the EPA recommended 2002 as the base year emissions inventory,[2] and is therefore the starting point for calculating RFP. Texas submitted the 2002 base year inventories for all state nonattainment areas on May 13, 2005. The EPA approved the HGB emission inventory on April 22, 2009 (74 FR 18298). The April 2010 and May 2013 submittals provide an updated base year inventory using MOVES2010a.

EPA is proposing to approve revisions to the 2002 Base Year Emissions Inventory. Table 1 provides the 2002 emissions inventory as previously submitted in 2005 and approved in 2009 with the updated 2010 inventory revised and adopted by Texas in 2013 for approval into the SIP.

[1] MOVES is an acronym for MOtor Vehicle Emission Simulator. This new emission modeling system released September 23, 2011, estimates emissions for mobile sources covering a broad range of pollutants and allows multiple scale analysis of emissions estimates from cars, trucks & motorcycles. Use of the MOVES model in SIPs was required as of March 2, 2013.

[2] November 18, 2002 EPA memorandum ''2002 Base Year Emission Inventory SIP Planning: 8-Hour Ozone, $PM_{2.5}$ and Regional Haze Programs, available at *http://www.epa.gov/ttnchie1/eidocs/2002baseinven_102502new.pdf.*

TABLE 1—REVISIONS TO THE 2002 RFP BASE YEAR EMISSIONS INVENTORY

[Tons/day]

Source type	NO_X		VOC	
Submittal date	2005	2010	2005	2010
Point	339.48	339.29	297.12	316.62
Area	40.15	89.11	219.51	407.61
On-road Mobile	283.20	371.89	114.30	124.47
Non-road Mobile	167.74	156.98	112.37	84.32
Total	830.57	957.27	743.30	933.02

A summary of the updated 2002 base year inventory submitted May 6, 2013 is shown in Table 2 below.

TABLE 2—RFP 2002 BASELINE EMISSIONS INVENTORY SUMMARY

Source type	Uncontrolled		Controlled	
	NO_X	VOC	NO_X	VOC
Point	339.29	316.62	339.29	316.62
Area	89.11	407.61	89.11	407.61
On-road Mobile	552.30	205.76	371.89	124.47
Non-road Mobile	166.98	100.15	156.98	84.32
Total	1147.68	1030.14	957.27	933.02

B. Adjusted Base Year Inventory and 2008 RFP Target Levels

The process for determining the emissions baseline from which the RFP reductions are calculated is described in section 182(b)(1) of the CAA and 40 CFR 51.910. This baseline value is the 2002 adjusted base year inventory. Sections 182(b)(1)(B) and (D) require the exclusion from the base year inventory of emissions benefits resulting from the Federal Motor Vehicle Control Program (FMVCP) regulations promulgated by January 1, 1990, and the Reid Vapor Pressure (RVP) regulations promulgated June 11, 1990 (55 FR 23666). The FMVCP and RVP emissions reductions are determined by the State using EPA's highway mobile source emissions model software, MOVES2010a. The FMVCP and RVP emission reduction are then removed from the base year inventory by the State, resulting in an adjusted base year inventory. The emission reductions needed to satisfy the RFP requirement are then calculated from the adjusted base year inventory. The reductions are then subtracted from the adjusted base year inventory to establish the emissions target for the RFP milestone year (2018).

For severe areas like the HGB nonattainment area, the CAA § 182(c)(2)(B) specifies a 15 percent reduction in ozone precursor emissions over an initial six-year period, and an additional three percent per year for every year thereafter until the attainment year. In the Phase 2 rule, EPA provided that areas that were also designated nonattainment and classified as moderate or higher for the 1-hour ozone standard and that have the same boundaries as an area for which the EPA fully approved a 15 percent plan for the 1-hour NAAQS, are considered to have met the requirement of section 182(b)(1) of the CAA for the 8-hour NAAQS. In this situation, a severe nonattainment area is subject to RFP under 172(c)(2) of the CAA and shall submit, no later than three years after designation for the 8-hour NAAQS, a SIP revision that meets the requirements of 40 CFR 51.910(b)(2). The RFP SIP revision must provide for a 15 percent emission reduction (of NO_X and/or VOC) accounting for any growth that occurs during the six year period following the baseline emissions inventory year, i.e., 2002–2008.

The HGB nonattainment area had the same boundary under the 1-hour ozone standard as that of the 8-hour ozone standard. The HGB area under the 1-hour ozone standard was classified as severe. The EPA approved the HGB 15 percent RFP plan on April 22, 2009 (74 FR 18298). Therefore, according to the Phase 2 Rule, the RFP plan for the HGB nonattainment area may use either NO_X or VOC emissions reductions (or both) to achieve the 15 percent emission reduction requirement.

According to section 182(b)(1)(D) of the CAA, emission reductions that resulted from the FMVCP and RVP rules promulgated prior to 1990 are not creditable for achieving RFP emission reductions. Therefore, the 2002 base year inventory is adjusted by subtracting the VOC and NO_X emission reductions that area expected to occur between 2002 and the future milestone years due to FMVCP and RVP rules.

Texas sets out its calculations for the adjusted base year (ABY) inventory and milestone target levels in Chapter 2, section 2.5.3 of the 2010 submittal and Chapter 2, section 2.5 of the 2013 submittal, according to the following method. See the calculations in Table 3 below.

Step 1. Estimate the actual anthropogenic base year inventory for both VOC and NO_X in 2002 with all 2002 control programs in place.

Step 2. Using the same highway vehicle activity inputs used to calculate the actual 2002 inventory, run the appropriate motor vehicle emissions model for 2002 and for 2008 with all post-1990 CAA measures turned off. Any other local inputs for vehicle inspection and maintenance (I/M) programs should be set according to the program that was required to be in place in 1990. Fuel RVP should be set at 9.0 or 7.8 depending on the RVP required in the local area as a result of fuel RVP regulations promulgated in June 1990.

Step 3. Calculate the difference between 2002 and 2008 VOC emissions factors calculated in Step 2 and multiply by 2002 VMT. The result is the VOC emissions reductions that will occur between 2002 and 2008 without the benefits of any post-1990 CAA measures. These are the non-creditable VOC reductions that occur over this period. Calculate the difference between 2002 and 2008 NO_X emissions factors calculated in Step 2 and multiply by 2002 VMT. This result is the NO_X emissions reductions that will occur between 2002 and 2008 without the benefits of any post-1990 CAA measures. These are the non-creditable NO_X reductions that occur over this period.

Step 4. Subtract the non-creditable VOC reductions calculated in Step 3 from the actual anthropogenic 2002 VOC inventory estimated in Step 1. Subtract the non-creditable NO_X reductions calculated in Step 3 from the actual anthropogenic 2002 NO_X inventory estimated in Step 1. These adjusted VOC and NO_X inventories are the basis for calculating the target level of emissions in 2008.

Step 5. The target level of VOC and NO_X emissions in 2008 needed to meet the 2008 rate of progress ROP requirement is any combination of VOC and NO_X reductions from the adjusted inventories calculated in Step 4 that total 18 percent.

TABLE 3—HGB NAA 2008 RFP TARGET LEVEL CALCULATIONS WITH NO_X SUBSTITUTION

[Ozone Season tpd]

Description	Formula	NO_X	VOC
A 2002 Rate-of Progress Base Year Inventory		957.27	933.02
B 2002 On-road ABY emissions inventory		552.30	205.76
C FMVCP/RVP Reductions Between 2002 and 2008	B − C	−25.99	−0.13
D 2008 On-road ABY emissions inventory		578.29	205.89
E 2008 ABY emission inventory		983.26	933.15
F RFP Ratio		17%	1%
G Emissions Reductions Required Between 2002 & 2008	E × F	167.15	9.33
Target Level for 2008	A − G	816.10	923.82

C. Projected Inventories and Determination of RFP

Texas describes its methods used for developing its 2018 projected VOC and NO_X inventories in Chapter 2 of the 2010 SIP submittal. EPA reviewed the procedures Texas used to develop its projected inventories and found them to be reasonable.

Projected controlled 2018 emissions for the HGB nonattainment area are summarized in Tables 4 and 5.

TABLE 4—SUMMARY OF HGB RFP NO_X EMISSION REDUCTIONS IN TONS PER DAY

Control strategy description	2008	2011	2014	2017	2018
Mass Emissions Cap and Trade Program (MECT)	219.83	227.65	243.87	263.23	269.94
Tank Landing Loss Rule	0.00	0.00	0.00	0.00	0.00
Federal Portable Fuel Container (PFC) Rule	0.00	0.00	0.00	0.00	0.00
Federal Motor Vehicle Control Program (FMVCP)	150.64	319.72	409.05	486.84	510.15
Federal Reformulated Gasoline (RFG)	150.64	189.54	213.44	235.00	241.29
Inspection and Maintenance (I/M)	17.35	16.62	11.80	8.03	7.10
On-road Texas Low Emission Diesel (TxLED)	6.03	5.08	3.52	2.55	2.36
Tier I and II Locomotive NO_X standards	11.74	12.75	14.09	15.24	16.04
Small Non-Road Spark Ignition (SI) Phase I	[1] −0.30	[1] −0.39	[1] −0.47	[1] −0.56	[1] −0.58
Heavy-duty Non-Road Engines	5.76	7.91	9.64	12.02	12.56
Tier 2 and 3 Non-Road Diesel Engines	8.13	14.01	18.76	23.25	24.29
Federal Standards for New Small Non-Road Spark Ignition (SI) Engines (Phase II)	1.25	1.65	1.85	1.99	2.04
Federal Standards for New Large Non-road SI and Recreational Marine	12.27	20.30	27.01	31.10	32.13
Non-road TxLED	2.87	2.59	2.14	1.73	1.59
Non-road RFG	0.00	0.00	0.00	0.00	0.00
Tier 4 Federal Standards for Diesel Engines	0.00	0.52	4.67	10.96	12.82
Federal Marine Diesel Tier 2	1.96	3.23	4.72	6.20	6.90
Sum of Control Reductions	678.70	821.18	964.09	1097.58	1138.63

[1]The negative NO_X emissions reductions number from Small Non-Road SI Phase I engines is attributed to fleet growth in light of more stringent standards.

TABLE 5—SUMMARY OF HGB RFP VOC EMISSION REDUCTIONS IN TONS PER DAY

Control strategy description	2008	2011	2014	2017	2018
Mass Emissions Cap and Trade Program (MECT)	0.00	0.00	0.00	0.00	0.00
Tank Landing Loss Rule	0.00	11.50	11.50	11.50	11.50
Federal Portable Fuel Container (PFC) Rule	0.00	3.68	9.65	10.10	10.25
Federal Motor Vehicle Control Program (FMVCP)	109.17	148.83	188.98	222.89	232.44
Reformulated Gasoline (RFG)	22.03	22.79	17.27	14.12	13.48
Inspection and Maintenance (I/M)	9.56	9.77	7.99	6.86	6.51

TABLE 5—SUMMARY OF HGB RFP VOC EMISSION REDUCTIONS IN TONS PER DAY—Continued

Control strategy description	2008	2011	2014	2017	2018
On-road Texas Low Emission Diesel (TxLED)	0.00	0.00	0.00	0.00	0.00
Tier I and II Locomotive NO_X standards	0.27	0.34	0.43	0.53	0.59
Small Non-Road Spark Ignition (SI) Phase I	1.77	2.50	3.23	3.95	4.19
Heavy-Duty Non- Road Engines	4.73	6.82	8.54	10.17	10.58
Tier 2 and 3 Non-Road Diesel Engines	0.95	1.68	2.32	2.95	3.10
Small Non-Road Spark Ignition (SI) Engines (Phase II)	16.70	20.81	22.72	24.13	24.57
Large Non-Road SI and Recreational Marine	4.14	7.96	11.37	14.03	14.76
Non-road TxLED	0.00	0.00	0.00	0.00	0.00
Non-road RFG	0.04	0.13	0.22	0.30	0.33
Tier 4 Diesel Engines	0.00	0.03	0.26	0.52	0.59
Federal Marine Diesel Tier 2	0.08	0.12	0.18	0.24	0.26
Sum of Control Reductions	169.44	236.96	284.66	322.29	333.15

To determine if 2018 RFP is met in the HGB nonattainment area, the total projected controlled emissions must be compared to the target levels calculated in the previous section of this document. As show below in Table 6, the total VOC and NO_X emission projections meet the 2018 emission targets. Therefore, the 2018 RFP in the HGB nonattainment area is demonstrated.

TABLE 6—SUMMARY OF RFP DEMONSTRATION FOR HGB

[Tons/Day]

	Inventory	NO_X	VOC
1	2018 Target	555.22	907.50
2	2018 Uncontrolled Emissions	1636.21	1210.28
3	2008–2017 RFP Emission Reductions	1097.60	302.46
4	2017–2018 RFP Emission Reductions	41.03	10.86
5	Controlled RFP Emissions Forecast (Line 2 minus Line 3 minus Line 4)	497.59	896.95
6	Amount of Creditable Reductions Reserved for 2009–2018 Contingency	24.58	4.67
7	2018 Projected Emissions after RFP Reductions (Add Lines 5 and 6)	522.17	901.62
8	Excess(+)/Shortfall(−) (Line1 minus Line 7)	+33.04	+5.88
9	RFP Met? (Line 7 < Line 1)	Yes	Yes

D. Control Measures and Emission Reductions for RFP

The control measures upon which Texas relies for credit to demonstrate RFP requirements for the HGB nonattainment area are described in Chapter 4 of the 2010 SIP submittal. To demonstrate RFP for the HGB nonattainment area, Texas used a combination of (1) stationary point, (2) highway mobile, and (3) non-road mobile source control measures.

Stationary point source NO_X reductions are from the mass emissions cap and trade program (MECT). The MECT program is mandatory for stationary facilities that emit NO_X in the HGB ozone nonattainment area (at sites that have a collective design capacity of 10 tons per year or more) and which are subject to the Texas Commission on Environmental Quality NO_X rules as found at 30 TAC Chapter 117. Non-road emission reductions are from Federal controls on non-road engines. Reduction in on-road mobile source emissions are from the inspection and maintenance (I/M) program, summer reformulated gasoline, the Federal Motor Vehicle Control Program (FMVCP), and the Texas low emission diesel (TxLED) program.

The EPA initially approved the MECT rules on November 14, 2001 (66 FR 571252). The most recent revision to these rules was on July 16, 2009 (74 FR 34503). All non-road, summer RFG and the FMVCP are federal programs. The I/M program was initially approved November 14, 2001 (66 FR 57268), with the most recent revision on September 6, 2006 (71 FR 52670). The TxLED program was initially approved November 14, 2001 (66 FR 57196), with the most recent revision on May 6, 2013 (78 FR 26255). Emission reductions from these control measures are summarized in Tables 5 and 6 above.

E. Contingency Measures

Section 172(c)(9) of the CAA requires a state with a moderate or above ozone nonattainment area to include sufficient additional contingency measures in its RFP plan in case the HGB nonattainment area fails to meet RFP requirements. The same provision of the CAA also requires that the contingency measures must be fully adopted control measures or rules. Upon failure to meet and RFP milestone requirement, the state must be able to implement the contingency measures without any further rulemaking activities. Upon implementation of these measures, additional emission reductions of at least 3 percent of the adjusted 2002 baseline must be achieved. For more information on contingency measures, see the April 16, 1992 General Preamble (57 FR 13498, at 13512) and the November 29, 2005 Phase 2 8-hour ozone implementation rule (70 FR 71612).

To meet the requirements for contingency emission reductions, the EPA interprets the CAA to allow for the use of early implementation of control measures as contingency measures. The EPA also interprets the CAA to allow for the substitution of NO_X emission reductions for VOC emission reductions in the contingency plans (by any combination of NO_X and VOC, as long as the 3 percent reduction is achieved and 0.50 percent of the total is attributable to VOCs as prescribed by Texas).

The RFP contingency requirement may be met by including in the RFP plan a demonstration of 27 percent VOC and NO_X RFP reductions. The

additional 12 percent above the 15 percent requirement must be attributed to specific measures. Texas elected to use emission reductions in excess of those needed for RFP as the contingency measures for the HGB RFP SIP. Tables 7–47 and 7–48 in the state's submittal show how this is done. Table 7 below summarizes these calculations and results for the 2018 attainment year. Contingency measures for the 2008–2017 milestone years were calculated in a similar manner.

TABLE 7—CONTINGENCY MEASURE DEMONSTRATION FOR THE 2018 ATTAINMENT YEAR

[Tons/Day]

Description	NO_X	VOC
2018 ABY Emission Inventory	1003.92	935.59
Percent for contingency calculation (total of 3%)	2.50	0.50
3% needed for contingency (2018–2019)	25.10	4.68
Control reductions to meet contingency requirements		
Surplus reductions from 2018 RFP demonstration	33.04	5.88
Subtract 2018 RFP MVEB safety margin from surplus reductions from 2018 RFP demonstration	−11.00	−5.18
State and federal control measures (see TSD)	33.00	10.83
Total contingency reductions	55.04	11.53
Contingency excess (+) or shortfall (−)	+29.95	+6.85
Contingency met?	Yes	Yes

To determine if Texas meets the 3 percent contingency measure requirement for the HGB nonattainment area, the total projected controlled emissions (including growth, but excluding reductions from the non-creditable pre-1990 FMVCP) must be compared to the contingency measure target levels calculated above. Texas has sufficient early contingency measures in place to meet the contingency measure requirement for the HGB nonattainment area for purposes of demonstrating RFP in the attainment year and in the milestone years.

F. Vehicle Miles Traveled Offset Analysis

1. What is a VMT offset analysis?

Section 182(d)(1)(A) of the Act directs states containing ozone nonattainment areas classified as severe, pursuant to section 181(a) of the Act, to adopt specific enforceable transportation control strategies (TCSs) and transportation control measures (TCMs) to offset increases in emissions resulting from growth in vehicle miles traveled (VMT) or numbers of vehicle trips and to obtain reductions in motor vehicle emissions as necessary (in combination with other emission reduction requirements) to comply with the Act's RFP milestones (sections 182(b)(1) and (c)(2)(B)) and attainment demonstration requirements (section 182(c)(2)(A)). Section 182(d)(1)(A) of the Act directs states to submit the VMT Offset SIP by November 15, 1992, for any severe and above ozone nonattainment area. Texas has one severe 1997 8-hour ozone nonattainment area, the HGB area, with an attainment deadline of 2018.

The EPA originally interpreted section 182(d)(1)(A) in the April 16, 1992, General Preamble to Title I of the Act (57 FR 13498, 13521–13523). In that interpretation, EPA allowed areas to meet the requirement by using the aggregate motor vehicle emissions from a prior year as the appropriate baseline against which to measure the change in emissions to determine whether VMT offsets are required. In other words, a plan was approvable if it showed decreases in aggregate year-over-year motor vehicle emissions from a base year through the applicable attainment year. EPA applied this interpretation in approving numerous states' VMT offset demonstrations, including our 2001 approval of the HGB area's first VMT offset demonstration. Although a commenter objected to this interpretation in our 2001 approval, it did not challenge it in court. However, EPA's historical interpretation of section 182(d)(1)(A), as applied to California's 2003 South Coast 1-Hour Ozone SIP, was finally challenged in the U.S. Court of Appeals for the 9th Circuit. In 2011, that court rejected EPA's interpretation, stating that section 182(d)(1)(A) requires VMT offsets if there is ''any increase in the level of emissions *solely* from VMTs (italics added).'' [3] The court explained that EPA incorrectly interpreted the phrase ''growth in emissions'' as meaning a growth in ''aggregate motor vehicle emissions'' versus a growth solely from VMT. As a result, the court held that EPA should have required the State to implement TCMs to offset growth in emissions from growth in VMT. However, the Court acknowledged that ''clean car technology'' advances could result in there being no increase in emissions even in the face of VMT growth, which would then allow VMT to increase without triggering the requirement to adopt offsetting TCMs. In response to the court's decision, EPA provided new guidance for states with severe or above areas. The guidance, *Implementing Clean Air Act Section 182(d)(1)(A): Transportation Control Measures and Transportation Control Strategies To Offset Growth in Emissions Due to Growth in Vehicle Miles Travelled*,[4] recommends that both TCSs and TCMs should be included in calculations for the purpose of determining the degree to which any hypothetical growth in emissions due to growth in VMT should be offset.

The approved HGB 1-hour ozone attainment demonstration (November 14, 2001, 66 FR 57160) relies on the EPA approval of a VMT Offset analysis dated November 14, 2001 (66 FR 57247). On May 6, 2013, the State submitted an analysis based on the new EPA guidance, which demonstrates how the HGB area meets the VMT Offset requirement of CAA 182(d)(1)(A). This was done in concert with the revised emission inventory, the RFP, and the MVEBs for 2018.

2. How is the VMT offset requirement satisfied?

The August 2012 guidance cited above explains how States may demonstrate that the VMT offset requirement is satisfied. States are recommended to estimate emissions for two different years: The nonattainment area's base year and three different scenarios for the attainment year. One emission inventory is developed for the

[3] *Association of Irritated Residents* v. *EPA,* 632 F.3d 584, at 596–597 (9th Cir. 2011), reprinted as amended on January 27, 2012.

[4] Office of Transportation and Air Quality, EPA–420–B–12–053, August 2012. This guidance is available at *http://www.epa.gov/otaq/stateresources/policy/general/420b12053.pdf.*

base year and three different inventory scenarios are developed for the attainment year. For the attainment year the state would present three emissions estimates, two of which would represent hypothetical emissions scenarios that would provide the basis to identify the ''growth in emissions'' due solely to growth in VMT, and one that would represent projected actual motor vehicle emissions after fully accounting for projected VMT growth and offsetting emissions reductions obtained by all creditable TCMs and TCSs. See the guidance for specific details on how states might conduct the calculations. To properly construct these inventories, a special version of MOVES2010 was provided to the State, MOVES2010bROP, which was designed by EPA to be used exclusively for VMT Offset demonstrations. MOVES2010bROP is identical to the original April 2012 release of MOVES2010b except that it allows users to set a base year other than 1990 for the purposes of the VMT offset calculation.

The base year (2002) on-road VOC emissions should be based on VMT in that year and it should reflect all enforceable TCSs and TCMs in place in the base year. This would include the vehicle emissions standards, State and local control programs such as inspection and maintenance programs or fuel rules, and any additional implemented TCSs and TCMs that were already required by or credited in the SIP as of that base year.

The first of the attainment year emissions calculations for the attainment year (2018) would be based on the projected VMT for that year, and assume that no new TCSs or TCMs beyond those already credited in the base year inventory have been put in place since the base year. This calculation demonstrates how emissions would hypothetically change if no new TCSs or TCMs were implemented, and VMT was allowed to grow at the projected rate from the base year. This estimate would show the potential for an increase in emissions due solely to growth in VMT. This represents a no–action-taken scenario. Emissions in the attainment year may be lower than those in the base year due to the fleet that was on the road in the base year gradually being replaced through fleet turnover, but they would still be higher than they would have been assuming VMT had held constant.

The second of the attainment year's emissions calculations for the attainment year would also assume that no new TCSs or TCMs beyond those already credited were added or implemented after the base year and would also assume that there was no growth in VMT between the base year and attainment year. This estimate would reflect the hypothetical emissions level that would have occurred had no further TCMs or TCSs been adopted or implemented and had VMT levels held constant. Like the first estimate, emissions in the attainment year may be lower than those in the base year due to the fleet that was on the road in the base year gradually being replaced through fleet turnover, but in this case they would not be influenced by any growth in VMT. This emissions estimate would reflect a ceiling on the emissions that should be allowed to occur under the statute as interpreted by the Court in the attainment year because it shows what would happen under a scenario in which no new TCSs or TCMs are put in place and VMT is ''held constant'' during the period from the area's base year to its attainment year. This represents a VMT ceiling scenario. This hypothetical status quo is a necessary step in identifying the target level of emissions from which states would determine whether further TCMs or TCSs would need to be adopted and implemented in order to offset ''any increase in emissions due solely to VMT'' as shown by the first calculation. The comparison of these first two calculations would thus identify whether there is a hypothetical growth in emissions from growth in VMT that would need to be offset.

Finally, the state would present the emissions that are actually expected to occur in the area's attainment year, giving credit to all enforceable post-baseline-year added and credited TCSs and TCMs that have actually been adopted. This estimate would be based on the VMT that is expected to occur in the attainment year (i.e., the VMT level from the first estimate) and all of the TCSs and TCMs that are in reality expected to be in place and for which the SIP will take credit in the area's attainment year, including any TCMs and TCSs adopted and credited since the baseline year. This represents the Attainment Year scenario (or the ''actual'' scenario). If this emissions estimate is less than or equal to the emissions ceiling that was established in the second of the attainment year calculations, the credited TCSs or TCMs for the attainment year would be sufficient to already offset the hypothetical growth in emissions represented by comparing the first two calculations. If, instead, the estimated attainment year emissions are greater than the ceiling which was established in the second of the emissions attainment year calculations, the state would need to implement additional TCSs or TCMs to further offset the growth in emissions and bring the actual emissions down to at least the ''had VMT held constant'' ceiling estimated in the second of the attainment year calculations.

3. What does Texas' demonstration show?

The May 6, 2013 VMT analysis provides a 2002 base year inventory based on VMT in that year and includes all enforceable TCSs and TCMs in place in that base year of 2002. It also provides the three different scenarios for the attainment year inventories including the No-Action scenario, the VMT Offset Ceiling scenario, and the 2018 Attainment Year (actual) scenario, as described above. These were prepared using MOVES2010bROP, as provided by EPA specifically for the VMT offset analysis. In addition, for the actual scenario, the State clearly identified all enforceable post-base year TCMs and TCSs, relied upon in the attainment demonstration SIP submittal. These include, among other things, the vehicle inspection and maintenance, federal on-road and non-road emission control programs, and state and federal clean fuel programs.[5] A comparison of the 2018 attainment year inventory with the VMT Offset Ceiling scenario's results (step 3 in the guidance) shows that the emissions level calculated in step 4 is less than the emissions level calculated in step 3. See Table 8 below and Table 7–45 in the May 6, 2013 submittal.

[5] Approval of the VMT Offset Plan requires approval of all the TCSs and TCMs that Texas relies on in the actual scenario. EPA has previously approved all such TCSs and TCMs. November 14, 2001, 66 FR 57195, 66 FR 57196, and 66 FR 57 261.

TABLE 8—VMT OFFSET INVENTORY SCENARIOS AND RESULTS

VMT Offset scenario	Description	VMT Year	Control year	Fleet turnover year	VOC Emissions
Scenario 1	Base Year	2002	2002	2002	124.47
Scenario 2	No Action	2018	2002	2018	87.32
Scenario 3	VMT Offset Ceiling	2002	2002	2018	58.15
Scenario 4	Attainment Year	2018	2018	2018	51.84

In this case, any increased emissions due to solely increased VMT identified in the difference between the levels of the No Action and VMT Offset Ceiling scenarios have been adequately offset by TCSs and TCMs used to identify emissions levels in the Attainment Year scenario. That is, the credited TCSs or TCMs for the attainment year will be sufficient to offset the hypothetical growth in emissions represented by comparing the first two calculations. So, the VMT Offset requirement is met, and no additional offsetting TCSs or TCMs beyond those already identified are required.

Therefore, we propose to approve the VMT Offset analysis for the HGB ozone nonattainment area.

G. Transportation Conformity Budgets

Transportation conformity is required by CAA section 176(c). The EPA's conformity rule requires that transportation plans, programs and projects conform to state air quality implementation plans and establishes the criteria and procedure for determining whether they do or not. Conformity to a SIP means that transportation activities will not produce new air quality violations, worsen existing violations, or delay timely attainment of the NAAQS. The MVEB is the mechanism to determine if the future transportation plans conform to the SIP. A MVEB is the maximum amount of emissions allowed in the SIP for on-road motor vehicles. The MVEB establishes an emissions ceiling for the regional transportation network. States must establish VOC and NO_X MVEBs for each of the milestone years up to the attainment year and submit the mobile budgets to the EPA for approval. Upon an adequacy determination or approval by the EPA, states must conduct transportation conformity analyses for their Transportation Improvement Programs and long range transportation plans to ensure highway vehicle emissions will not exceed relevant MVEBs.

Texas discusses MVEBs in Chapter 7 of the 2013 submittal and Chapter 5 in the 2010 submittal. The State worked with the Houston-Galveston Area Council to establish the budgets for 2008 and beyond. The mobile emission inventory was calculated using EPA's MOVES2010a mobile source emissions model.

Table 9 shows the total projected transportation emissions for milestone years 2008–2018, as submitted in Tables 7–43 through 7–47 of the 2013 SIP Submittal.

TABLE 9—RFP MOTOR VEHICLE EMISSIONS BUDGETS FOR HGB

Year	NO_X (Tons/Day)	VOC (Tons/Day)
2008	261.95	102.50
2011	234.92	93.56
2014	171.63	71.56
2017	130.00	59.76
2018	120.99	57.02

For the budgets to be approvable, they must meet, at a minimum, EPA's adequacy criteria (See 40 CFR 93.118(e)(4)). The Notice of Adequacy Determination for these RFP MVEBs finding the revised 2010 RFP MVEBs (also termed transportation conformity budgets) adequate because they meet all of the criteria in 40 CFR 93.118(e)(4) was signed by the Regional Administrator on July 19, 2013. In addition to the budgets being adequate for transportation conformity purposes, EPA found the procedures Texas used to develop the MVEBs to be reasonable. In this action we propose to approve the revised budgets submitted on May 6, 2013.

We are proposing to find that the MVEBs are fully consistent with RFP, and proposing to find that the RFP plan is fully approvable, as it sets the allowable on-road mobile emissions the HGB area can produce and use to continue to demonstrate RFP. These budgets are approvable because they conform to the emissions inventory projections provided for this RFP. Therefore, the 2013 budgets are proposed for approval.

IV. Proposed Action

The EPA's review of the 2008–2018 emission inventory, the RFP plan, the RFP contingency measures, the VMT Offset Plan, and the 2008–2018 transportation conformity budgets contained in the April 1, 2010 and May 6, 2013, submittals for the HGB nonattainment area fully address the CAA requirements, EPA's regulations, and are consistent with EPA guidance. Therefore, the EPA is proposing approval of these specific elements of the HGB 8-hour ozone plan. The EPA is soliciting public comments on the issues discussed in this document. These comments will be considered before taking final action.

V. Statutory and Executive Order Reviews

Under the Clean Air Act, the Administrator is required to approve a SIP submission that complies with the provisions of the CAA and applicable Federal regulations. 42 U.S.C. 7410(k); 40 CFR 52.02(a). Thus in reviewing SIP submissions, the EPA's role is to approve state choices, provided that they meet the criteria of the CAA. Accordingly, this action merely proposes to approve state law as meeting Federal requirements and does not impose additional requirements beyond those imposed by state law. For that reason, these proposed actions:

- Are not ''significant regulatory actions'' subject to review by the Office of Management and Budget under Executive Order 12866 (58 FR 51735, October 4, 1993);
- do not impose an information collection burden under the provisions of the Paperwork Reduction Act (44 U.S.C. 3501 et seq.);
- are certified as not having a significant economic impact on a substantial number of small entities under the Regulatory Flexibility Act (5 U.S.C. 601 et seq.);
- do not contain any unfunded mandate or significantly or uniquely affect small governments, as described in the Unfunded Mandates Reform Act of 1995 (Pub. L. 104–4);
- do not have Federalism implications as specified in Executive Order 13132 (64 FR 43255, August 10, 1999);
- are not economically significant regulatory actions based on health or safety risks subject to Executive Order 13045 (62 FR 19885, April 23, 1997);

• are not a significant regulatory action subject to Executive Order 13211 (66 FR 28355, May 22, 2001);

• are not subject to requirements of section 12(d) of the National Technology Transfer and Advancement Act of 1995 (15 U.S.C. 272 note) because application of those requirements would be inconsistent with the Clean Air Act; and

• do not provide EPA with the discretionary authority to address, as appropriate, disproportionate human health or environmental effects, using practicable and legally permissible methods, under Executive Order 12898 (59 FR 7629, February 16, 1994).

In addition, this rule does not have tribal implications as specified by Executive Order 13175 (65 FR 67249, November 9, 2000), because the SIP is not approved to apply in Indian country located in the state, and EPA notes that it will not impose substantial direct costs on tribal governments or preempt tribal law.

List of Subjects

40 CFR Part 52

Environmental protection, Air pollution control, Carbon monoxide, Incorporation by reference, Intergovernmental relations, Lead, Ozone, Nitrogen dioxide, Particulate matter, Reporting and recordkeeping requirements, Sulfur dioxide, Volatile organic compounds.

40 CFR Part 81

Environmental protection, Air pollution control, Intergovernmental relations, Nitrogen dioxide, Ozone, Reporting and recordkeeping requirements, Volatile organic compounds.

Authority: 42 U.S.C. 7401 *et seq.*

Dated: August 28, 2013.

Ron Curry,

Regional Administrator, Region 6.

[FR Doc. 2013–21883 Filed 9–6–13; 8:45 am]

BILLING CODE 6560–50–P

ENVIRONMENTAL PROTECTION AGENCY

40 CFR Part 52

[EPA–R06–OAR–2013–0387; FRL–9900–80–Region 6]

Approval and Promulgation of Implementation Plans; Texas; Attainment Demonstration for the Houston-Galveston-Brazoria 1997 8-Hour Ozone Nonattainment Area

AGENCY: Environmental Protection Agency (EPA).

ACTION: Proposed rule.

SUMMARY: EPA is proposing to approve State Implementation Plan (SIP) submittals from the State of Texas for the Houston-Galveston-Brazoria 1997 8-hour ozone nonattainment area (HGB area). EPA is proposing approval of the following SIP Clean Air Act required elements from Texas for the HGB area: The attainment demonstration for the 1997 ozone National Ambient Air Quality Standards (NAAQS), the reasonably available control measures (RACM) demonstration for the NAAQS, the contingency measures plan in the event of failure to attain the NAAQS by the applicable attainment date, and a Motor Vehicle Emissions Budget (MVEB) for 2018, which is the attainment year for the area. EPA is also proposing to approve revisions to the air pollution control measures and General Air Quality Definitions in the Texas SIP. The revisions to the air pollution control measures include revisions to the Mass Emissions Cap and Trade (MECT) program for nitrogen oxides (NO_X), revisions to the highly reactive volatile organic compound (HRVOC) emissions cap and trade (HECT) program, Voluntary Mobile Emissions Program (VMEP) measures, and Transportation Control Measures (TCMs). EPA is proposing these actions in accordance with section 110 and part D of the Clean Air Act (CAA or the Act).

DATES: Written comments must be received on or before October 9, 2013.

ADDRESSES: Submit your comments, identified by Docket No. EPA–R06–OAR–2013–0387, by one of the following methods:

• *www.regulations.gov.* Follow the online instructions.

• *Email: r6air_hgbozone@epa.gov.* Please also send a copy by email to the person listed in the **FOR FURTHER INFORMATION CONTACT** section below.

• *Mail or delivery:* Mr. Guy Donaldson, Chief, Air Planning Section (6PD–L), Environmental Protection Agency, 1445 Ross Avenue, Suite 1200, Dallas, Texas 75202–2733.

Instructions: Direct your comments to Docket No. EPA–R06–OAR–2013–0387. EPA's policy is that all comments received will be included in the public docket without change and may be made available online at *www.regulations.gov,* including any personal information provided, unless the comment includes information claimed to be Confidential Business Information (CBI) or other information whose disclosure is restricted by statute. Do not submit information through *www.regulations.gov* or email that you consider to be CBI or otherwise protected. The *www.regulations.gov* Web site is an ''anonymous access'' system, which means EPA will not know your identity or contact information unless you provide it in the body of your comment. If you send an email comment directly to EPA without going through *www.regulations.gov* your email address will be automatically captured and included as part of the comment that is placed in the public docket and made available on the Internet. If you submit an electronic comment, EPA recommends that you include your name and other contact information in the body of your comment and with any disk or CD–ROM you submit. If EPA cannot read your comment due to technical difficulties and cannot contact you for clarification, EPA may not be able to consider your comment. Electronic files should avoid the use of special characters, any form of encryption, and be free of any defects or viruses.

Docket: All documents in the docket are listed in the *www.regulations.gov* index. Although listed in the index, some information is not publicly available, e.g., CBI or other information whose disclosure is restricted by statute. Certain other material, such as copyrighted material, will be publicly available only in hard copy. Publicly available docket materials are available either electronically in *www.regulations.gov* or in hard copy at the Air Planning Section (6PD–L), Environmental Protection Agency, 1445 Ross Avenue, Suite 700, Dallas, Texas 75202–2733. Contact the person listed in the **FOR FURTHER INFORMATION CONTACT** paragraph below to make an appointment.

FOR FURTHER INFORMATION CONTACT: Carl Young, Air Planning Section (6PD–L), telephone (214) 665–6645, email *young.carl@epa.gov.*

SUPPLEMENTARY INFORMATION: Throughout this document wherever ''we,'' ''us,'' or ''our'' is used, we mean the EPA.

Table of Contents

I. Background
A. The 1997 Ozone NAAQS and the HGB Area
B. CAA and Regulatory Requirements for Ozone Nonattainment SIPs
C. State SIP Submittals
II. EPA's Evaluation
A. Attainment Demonstration Modeling and Weight-of-Evidence
1. Attainment Demonstration General
2. Photochemical Grid Modeling
3. Modeling Episodes
4. Modeling Emissions Inventory
5. Model Performance
6. Future Year Modeling
7. Results of 2018 Future Year Modeling

8. Additional Evidence
9. Attainment Demonstration Evaluation
B. Control Measures Relied Upon in the Attainment Demonstration
1. MECT
2. HECT
3. VMEP Measures and TCMs
4. Previously Approved State Measures and Federal Measures
5. Summary Regarding Control Measures Relied Upon in the Attainment Demonstration
C. RACM
D. Contingency Measures
E. MVEB
F. General Air Quality Definitions
III. Proposed Action
IV. Statutory and Executive Order Reviews

I. Background

A. The 1997 Ozone NAAQS and the HGB Area

Ground level ozone is formed when NO_X and volatile organic compounds (VOC) react in the presence of sunlight. These two pollutants, referred to as ozone precursors, are emitted by many types of pollution sources, including on-road and non-road motor vehicles and engines, power plants and industrial facilities, and smaller area sources such as lawn and garden equipment and paints. *See* 77 FR 30088, 30089 (May 21, 2012). Breathing ozone can trigger a variety of health problems including chest pain, coughing, throat irritation, and congestion. It can worsen bronchitis, emphysema, and asthma. Ground level ozone also can reduce lung function and inflame the linings of the lungs. Repeated exposure may permanently scar lung tissue. *See* 77 FR 30088, 30089 (May 21, 2012). For more information on ground level ozone please see *http://epa.gov/airquality/ozonepollution.*

In 1979, under section 109 of the CAA, EPA established primary and secondary NAAQS for ozone at 0.12 parts per million (ppm) averaged over a 1-hour period. *See* 44 FR 8202 (February 8, 1979). Primary standards are set to protect human health while secondary standards are set to protect public welfare. On July 18, 1997, EPA revised the primary and secondary NAAQS for ozone to set the acceptable level of ozone in the ambient air at 0.08 ppm, averaged over an 8-hour period. *See* 62 FR 38856 (July 18, 1997). EPA set the 8-hour ozone standard based on scientific evidence demonstrating that ozone causes adverse health effects at lower concentrations and over longer periods of time than was understood when the pre-existing 1-hour ozone standard was set. EPA determined that the 8-hour standard would be more protective of human health, especially children and adults who are active outdoors, and individuals with a pre-existing respiratory disease, such as asthma.[1]

In 2004, we classified the HGB area (Brazoria, Chambers, Fort Bend, Galveston, Harris, Liberty, Montgomery and Waller counties) as a moderate ozone nonattainment area for the 1997 ozone NAAQS. *See* 69 FR 23858 (April 30, 2004). In 2007, at the request of the State, and under CAA section 181(b)(3), we reclassified the HGB area to severe calling for attainment as expeditiously as practicable but no later than June 15, 2019. *See* 73 FR 56983 (October 1, 2008). Since 2018 is the first full year before the attainment deadline, we will judge attainment based on data through the end of 2018 and therefore, we refer to 2018 as the attainment year.

B. CAA and Regulatory Requirements for Ozone Nonattainment SIPs

States must implement the 1997 8-hour ozone standard under Title 1, Part D of the CAA, which includes section 172, ''Nonattainment plan provisions,'' and subpart 2, ''Additional Provisions for Ozone Nonattainment Areas'' (sections 181–185). We promulgated a regulation to implement the 1997 ozone NAAQS at 40 CFR part 51, subpart X (Provisions for Implementation of 8-hour Ozone National Ambient Air Quality Standard). The regulation addresses the requirements for modeling and attainment demonstrations, reasonably available control technology and measures (RACT and RACM), reasonable further progress (RFP), contingency measures, and new source review.

When we reclassified the HGB area, we also identified the SIP requirements for the area. The requirements being addressed in this notice are: (1) An attainment demonstration (40 CFR 51.908), (2) provisions for RACM (40 CFR 51.912), and (3) contingency measures to be implemented in the event of failure to attain the standard by the applicable attainment date (CAA 172(c)(9) and 182(c)(9)). In order to approve the attainment demonstration for the area we must also approve: (1) The measures relied on as necessary to demonstrate attainment, (2) an attainment MVEB for transportation conformity purposes, and (3) the RFP plan and the RFP contingency measures. *See Sierra Club* v. *EPA,* 294 F.3d 155, 163, (D.C. Cir. 2002). Some measures, relied upon as necessary for attainment, have been previously approved (section II.B.5). We are proposing to approve additional measures relied on as necessary to demonstrate attainment, and an attainment MVEB for 2018. In a separate proposal, we are addressing the RFP and RFP contingency measures requirements.[2] Current information on the status of HGB area SIP requirements for the 1997 ozone NAAQS can be found at: *http://epa.gov/air/urbanair/sipstatus.*

CAA section 172(c)(6) requires the attainment demonstration to include enforceable emission limitations, and such other control measures, means or techniques as well as schedules and timetables for compliance, as may be necessary to provide for attainment by the applicable attainment date. In order to be considered in the modeling, the measures must be permanent, enforceable and quantifiable. *See* 57 FR 13498, 13567 (April 16, 1992).

CAA sections 110(a)(1) and (2) and 110(l) require a state to provide reasonable public notice and opportunity for public hearing prior to the adoption and submission of a SIP or SIP revision. To meet this requirement, every SIP submittal should include evidence that adequate public notice was given and an opportunity for a public hearing was provided consistent with EPA's implementing regulations in 40 CFR 51.102.

C. State SIP Submittals

On April 6, 2010, Texas submitted for the HGB area: (1) An attainment demonstration, (2) revisions to the MECT program to protect the integrity of the NO_X cap in the HGB area, (3) revisions to the HECT program to reduce the HRVOC cap by 25% in Harris County and provide for a more equitable distribution of the HECT allowances, and (4) revisions to the General Air Quality definitions applicable to the entire Texas SIP.

On May 6, 2013, Texas submitted an update to the attainment demonstration. The update included: (1) Revised on-road mobile source emissions inventories and MVEBs using the more recent EPA MOVES mobile source emissions estimation model, (2) an update of the contingency measures analysis, and (3) updated discussions of emissions inventory, photochemical modeling, control strategies and required elements, and weight-of-evidence that the area will attain by its attainment date.

In addition to the revisions submitted on April 6, 2010, Texas previously

[1] Subsequently, we lowered the 8-hour ozone NAAQS to 0.075 ppm and classified the Houston area as a marginal nonattainment area for the 2008 ozone NAAQS. *See* 73 FR 16436 (March 27, 2008); 77 FR 30088, 30089 (May 21, 2012). This rulemaking does not address the 2008 ozone NAAQS.

[2] *See* docket EPA–R06–OAR–2010–0333 in *www.regulations.gov.*

submitted SIP revisions to the General Air Quality Definitions (30 TAC 101.1) on August 16, 2007. Texas later submitted additional revisions to 30 TAC 101.1 on March 11, 2011.

Each of the above identified submittals was given proper hearing and public notice by Texas as required by 40 CFR 51.102 and evidence of this was provided in the SIP submittal. Please see the submittals found in the electronic docket and our technical support document (TSD).

II. EPA's Evaluation

We have prepared a TSD for this rulemaking which details our evaluation. Our TSD may be accessed online at *http://www.regulations.gov,* Docket No. EPA–R06–OAR–2013–0387.

A. Attainment Demonstration Modeling and Weight-of-Evidence

Below, we briefly discuss the steps necessary to build an attainment demonstration, including photochemical modeling and supplemental weight of evidence and our evaluation of Texas' performance of these steps. Please see the TSD for this action for our full evaluation and conclusions.

1. Attainment Demonstration General. CAA 182 (c)(2)(A), and 40 CFR 51.908, 51.112, and Part 51 Appendix W—Guideline on Air Quality Models require that attainment demonstrations for ozone nonattainment areas classified as moderate or higher (severe in this case) be conducted with photochemical grid modeling or an equivalent technique approved by EPA. The CAA and regulations (including Appendix W) do not prescribe a specific photochemical grid model, but allow for EPA to judge the suitability of a model by considering multiple factors. These factors include choice of episode(s), emissions and meteorological inputs, model formulation, databases used, and how the model is used in the attainment test. Texas used the Comprehensive Air Quality Model with Extensions (CAMx) photochemical grid model in its demonstration that the control strategies for the HGB area will achieve attainment by 2018. The Texas Commission on Environmental Quality (TCEQ) also included a TSD, a number of appendices, and numerous electronic files that document model formulation, databases used, assumptions, judgements, evaluations of control strategy impacts, etc. EPA reviewed the available information and concluded that the use of CAMx is acceptable and TCEQ's modeling and documentation meets the photochemical modeling demonstration requirements of the CAA and 40 CFR 51.908, 51.112, and Part 51 Appendix W. Also, as allowed under EPA policy, TCEQ has introduced other evidence, referred to as weight of evidence, to supplement the modeling analysis.

2. Photochemical Grid Modeling. Photochemical grid models are the state-of-the-art method for predicting the effectiveness of control strategies in reducing ozone levels. The model uses a three-dimensional grid to represent conditions in the area of interest. In this case, TCEQ has developed a grid system that stretches from beyond Austin to the West, to the Atlantic Ocean to the East, to southern Canada to the North and into the Gulf of Mexico to the South. The model uses nested grid cells of 36 kilometers (km) on the outer portions, 12 km in east Texas and portions of nearby States, a 4 km grid cell covering the HGB and Beaumont Port Arthur (BPA) areas and a refined 2 km grid covering the HGB area. For more information on the modeling domain, please see Appendix A of the TSD. The model simulates the movement of air and emissions into and out of the three-dimensional grid cells (advection and dispersion); mixes pollutants upward and downward among layers; injects new emissions from sources such as point, area, mobile (both on-road and non-road), and biogenic into each cell; and uses chemical reaction equations to calculate ozone concentrations based on the concentration of ozone precursors and incoming solar radiation within each cell. Running the model requires large amounts of data regarding the emissions and meteorological conditions during an episode. Air quality planners choose historical episodes with high ozone levels to test the model. Modeling to duplicate conditions during a historical episode is referred to as the base case modeling and is used to verify that the model system can predict the historical ozone levels with an acceptable degree of accuracy. If the model can predict the ozone levels in the base case, it can then be used to project future ozone levels and the response of future ozone levels to proposed emission control strategies.

3. Modeling Episodes. Texas chose six recent historical episodes (2005: 5/19–6/3, 6/17–6/30, and 7/26–8/8; 2006: 5/31–6/15, 8/13–9/15, 9/16–10/11) that encompassed much of the time period of the Texas Air Quality Study (TexAQS II) 2005/6. During this study period, researchers from around the country participated in an intensive study of ozone formation in the HGB area, collecting additional meteorological and chemical data with the last two episodes occurring when the intensive field campaign occurred. This study provided a wealth of information to test the assumptions in the model. EPA believes that these episodes are acceptable episodes for development of the 1997 8-hour attainment plan. The episodes encompass a large number of exceedance days (55 days) and contain a variety of meteorological conditions which resulted in high concentrations of ozone in the area as measured on both a 1-hour and 8-hour basis. Day specific evaluation of these episode days confirms that overall, these episodes are representative of the conceptual model for high ozone in the HGB area. In summary, these episodes include most meteorological conditions that occur when ozone exceedances are monitored in HGB and the modeling and analyses were enhanced by having the TexAQS II field study data.

4. Modeling Emissions Inventory. TCEQ followed acceptable procedures for the development of the basecase inventory, following or building upon EPA guidance. They also included emissions during upsets and other day specific emissions. Despite these efforts, one of the original findings of the TexAQS 2000 study was that observed concentrations of certain compounds, especially light olefins such as ethylene and propylene, were much larger than represented in the reported emission inventory. As a result, TCEQ created an 'imputed' inventory (approximately 5.8 times the reported levels for these HRVOC species) in its 1-hour ozone attainment SIP. TCEQ also instituted rules to better regulate the industrial point sources that emit these compounds with ''HRVOC rules'' in a 2004 SIP modification approved by EPA (71 FR 52656, September 6, 2006). The more recent 2005/6 field study confirmed that these measures resulted in lower levels of these pollutants (approximately 42% lower on average than 2000 levels) but the HRVOC levels were still under reported with ambient measurements indicating that actual emissions were an average of 2–3 times reported levels. Field study data also confirmed that emission inventory estimates of other VOCs, in addition to the HRVOCs, were also under estimated, but these VOCs are harder to attribute to a specific category as they could be emitted from mobile, area, and non-road categories in addition to industrial point sources. As a result, TCEQ adjusted the estimates of the HRVOCs in the 2005/6 basecase emission inventories. This reconciliation with ambient data was performed using a combination of wind data and measurements from the Auto Gas Chromatographs that measure 56

different VOC species. The reconciliation resulted in upward adjustments of facility HRVOC emissions better match the ambient data. The adjustments ranged from less than two times greater than reported to more than ten times greater than reported in some cases.

We believe that the method TCEQ has used to reconcile ambient HRVOC emissions data with reported emissions is a reasonable approach to addressing the concern that reported emissions, despite being based on accepted estimation technologies, do not result in emission estimates that are consistent with ambient measurements. In addition, the ''reconciliation'' approach is more sophisticated and more accurate than the ''imputed'' approach used in past SIP revisions for the HGB area. The inventory, based on this reconciliation technique, also improved model performance. We continue to encourage TCEQ to find and resolve the issues that are resulting in these discrepancies between reported and actual emissions. As TCEQ works on attaining the 2008 8-hour ozone NAAQS, resolving these underestimated emissions of HRVOCs and other VOCs will continue to be very important.

5. Model Performance. Model performance is a term used to describe how well the basecase model predicts the ozone levels in a historical episode(s). As models have to make numerous simplifying assumptions and the system being modeled is very complex, model predictions will never be perfect. EPA and TCEQ evaluate a number of times series, diagnostic, and statistical metrics for the meteorological analysis that is used in the photochemical modeling analysis. EPA has developed various diagnostic, statistical and graphical analyses that TCEQ employed to evaluate the model's performance and determine if the model is working adequately to test control strategies. Overall the modeling over-predicted some maxima on lower ozone days and under-estimated some maxima on the higher ozone days. In addition, modeled ozone values at night do not drop as much as monitored ozone levels. EPA notes that the model's general tendency to under-predict on high days and over-predict on low days raises some uncertainty in the control strategy modeling. While the model had some problems with predicting the maxima in the HGB area, overall, the performance was adequate for moving forward using 37 of the initial 55 exceedance days in the control strategy analysis.

6. Future Year Modeling. Once the basecase/baseline modeling of historical episodes has been completed, the periods (days) with acceptable model performance can then be used to project future year ozone levels by replacing the basecase/baseline emissions with emissions estimates for future years. TCEQ developed a 2018 emission inventory using recent emission data information and projection tools. TCEQ used the meteorology files from the basecase episodes for the 2018 modeling estimates. Using meteorology from historical episodes allows one to assess whether the lower projected 2018 emission levels would be expected to result in attainment of the standard if the same meteorology occurs. For further details about 2018 emissions estimates and how they were generated, see our TSD and TCEQ's materials supporting this action.

7. Results of 2018 Future Year Modeling. The results of 2018 modeling are shown in Table 1. In estimating if the modeling is predicting attainment or nonattainment in the future year, we use a ratio that is based on the average of the 8-hour daily maximums predicted around a monitor in the future divided by the average of the 8-hour daily maximum predicted in the basecase. This ratio is called a Relative Response Factor (RRF). The RRF for a monitor is multiplied by the basecase 5-year average Design Value (DV) to obtain a future 5-year average DV.

Table 1 shows that all of the regulatory monitors except Deer Park and Bayland Park are predicted to have 2018 DVs below the 1997 8-hour NAAQS. For a full explanation of how these projections were calculated, see our TSD. Table 1 also shows that the Wallisville Rd. monitor that TCEQ has labeled as non-regulatory is also projected to be above the 1997 8-hour NAAQS in 2018 modeled DV projections. We have evaluated TCEQ's DV projections and confirm that they followed EPA's attainment demonstration guidance and methods as required by 40 CFR 51.112 and Appendix W of Part 51.

TABLE 1—FUTURE YEAR (2018) PROJECTED DESIGN VALUES

[Using the RRFs from the modeling]

Monitor designation	Site code	2006 DV_B (ppb) **	RRF	2018 DV_F (ppb) **
Houston East (CAMS 1)	HOEA	80.3	0.942	75.6
Aldine (CAMS 8)	HALC	**85.0**	0.916	77.9
Channelview (CAMS 15)	HCHV	82.7	0.937	77.5
Northwest Harris County (CAMS 26)	HNWA	**89.0**	0.877	78.1
Galveston Airport (CAMS 34)	GALC	81.7	0.927	75.7
Deer Park (CAMS 35)	DRPK	**92.0**	0.936	**86.1**
Seabrook Friendship Park (CAMS 45)	SBFP	**85.3**	0.924	78.8
Bayland Park (CAMS 53)	BAYP	**96.7**	0.899	**87.0**
Conroe Relocated (CAMS 78)	CNR2	83.0	0.877	72.8
Houston Regional Office (CAMS 81)	HROC	79.7	0.949	75.6
Manvel Croix Park (CAMS 84)	MACP	**90.7**	0.890	80.7
Clinton (CAMS 403)	C35C	79.0	0.947	74.8
North Wayside (CAMS 405)	HWAA	76.3	0.932	71.2
Swiss and Monroe (CAMS 406)	HSMA	**90.3**	0.917	82.9
Lang (CAMS 408)	HLAA	77.7	0.897	69.6
Croquet (CAMS 409)	HCQA	**87.0**	0.897	78.1
Shell Westhollow (CAMS 410)	SHWH	**92.3**	0.868	80.1
Houston Texas Avenue (CAMS 411)	HTCA	79.3	0.937	74.3
Haden Road (CAMS 603) *	H03H	84.0	0.943	79.2
Wallisville Road (CAMS 617) *	WALV	**92.0**	0.935	**86.0**
Danciger (CAMS 618) *	DNCG	80.3	0.881	70.8
Mustang Bayou (CAMS 619) *	MSTG	84.7	0.901	76.2
Texas City (CAMS 620) *	TXCT	84.3	0.921	77.7

TABLE 1—FUTURE YEAR (2018) PROJECTED DESIGN VALUES—Continued

[Using the RRFs from the modeling]

Monitor designation	Site code	2006 DV_B (ppb) **	RRF	2018 DV_F (ppb) **
Lynchburg Ferry (CAMS 1015)	LYNF	81.7	0.942	76.9
Lake Jackson (CAMS 1016)	LKJK	77.0	0.891	68.6

* Non-regulatory, industry-sponsored monitor.

** Values 85 parts per billion (ppb) or greater are shown in bold. The 1997 8-hour ozone NAAQS is 0.08 ppm, which equates to 84 ppb when rounding is considered.

EPA's 2007 Modeling Guidance also recommends that areas not near monitoring locations (unmonitored areas) in a nonattainment area be analyzed in an ''unmonitored area (UMA) analysis'' to determine if these areas would be expected to reach attainment. The standard attainment test (results in the table above) only applies at monitor locations, and the UMA analysis is intended to identify any areas not near a monitoring location that are at risk of not reaching attainment. The TCEQ chose to use its own procedure to conduct the UMA analysis instead of using EPA's Modeled Attainment Test Software (MATS). TCEQ's analysis uses similar approaches and we propose to accept its use for this SIP. TCEQ's UMA indicates that there are no areas in the HGB nonattainment area outside of the specific areas evaluated in the monitor based attainment test analysis that are at risk of not reaching attainment. In summary, EPA finds that TCEQ's photochemical modeling analysis indicates that all the monitors in HGB area will either be attaining or near attainment levels in 2018, all HGB unmonitored areas will be attainment, and TCEQ's evaluations conform with EPA's regulations and guidance.

8. Additional Evidence. The EPA's 1996 guidance entitled ''Guidance on Use of Modeled Results to Demonstrate Attainment of the Ozone NAAQS'' allows for the use of alternative analyses, called weight-of-evidence (WOE), to provide additional evidence that the proposed control strategy, although not modeling attainment, is nonetheless expected to achieve attainment by the attainment date. EPA continued to support WOE analyses in the 2007 Modeling Guidance. The intent of these guidance documents was to be cognizant of the fact that, under the structure of the standard some exceedances of the ozone NAAQS are allowed each year. Thus, even though the specific control strategy modeling may predict some areas to be above the NAAQS, this does not necessarily mean that with the implementation of the control strategy monitored attainment will not be achieved. In addition, as with other predictive tools, there are inherent uncertainties associated with modeling and its results. For example, there are uncertainties in the meteorological and emissions inputs and in the methodology used to assess the severity of an exceedance at individual sites. The EPA's guidance recognizes these limitations and provides a means for considering other evidence to help assess whether attainment of the NAAQS is likely. Since the future control case modeling in the Texas SIP revision predicts some areas still exceeding the ozone NAAQS, the TCEQ followed EPA Modeling Guidance to supplement the control strategy modeling with WOE analyses.

The strongest parts of the WOE analysis are the most recent 8-hour ozone monitoring trends and the continued reductions expected from vehicle fleet turnover. Ozone Design Value trends at most of the monitors in the HGB area show significant decreases over time and many of the monitors are currently attaining the 1997 8-hour ozone standard. Furthermore, the ozone precursor trends are generally showing a decrease that supports the HGB area's impact on ozone levels that exceed the standard is continuing to decrease.

The HGB area's most recent design value is 88 ppb through 2012. Additional reductions of precursor emissions are expected with six more years of fleet turnover bringing cleaner cars and off road equipment into the fleet. EPA believes that these reductions will bring about the additional 4 ppb of reduction necessary from 2012 monitored levels to reach attainment—supporting the proposed finding that HGB will attain by its attainment year.

To further support its WOE argument Texas submitted many additional analyses, which are discussed in the TSD for this action. These include: Corroborative analysis of the modeling, process analysis, application of source apportionment tools, highly detailed model performance evaluations, and analysis of model response to simulated emission reductions. Texas also provided an analysis of air quality data including: Ozone design value trends, trends in strength of ozone gradients, impact of Hurricane Ike on ozone levels, NO_X and VOC monitored trends, geographic patterns in HRVOC monitored values, meteorological adjusted trends, regional and Texas background ozone trends, and transport/surface wind trajectories.

Finally, to support the finding that the area would attain the standard, Texas documented additional control programs that were not included in the model but will provide emission reductions that will contribute to lower ozone levels. These include: Improved international marine diesel and fuel standards, SmartWay transport initiatives, car allowance rebates, improved control of VOCs from storage tanks, energy efficiency and renewable energy measures, Texas Emission Reduction Plan, Low Income Vehicle Repair Assistance/Retirement program, Clean School Bus program, Best Management Practices for barge emissions, and other local initiatives. In general, these measures are expected to reduce ozone concentrations but are difficult to quantify and therefore were not modeled. EPA agrees that these measures contribute to the evidence that the area will attain the standard by its attainment date.

One area of uncertainty in the attainment demonstration is the treatment of flare emissions in the modeling. The destruction efficiencies are projected to be high, with values from 98% to 99% depending on the compound. It is likely that flares not achieving these destruction efficiencies are one source of the documented under-estimation of the emissions inventory and the need to impute emissions based on ambient air concentrations for the base case/baseline emission inventory. We note that TCEQ has been working with industry on flare best management practices to try to insure good flare performance. These efforts should result in reduced flare emissions compared to current levels, but it is uncertain that all flares will achieve the projected destruction efficiencies in 2018 as

assumed in the modeling. How successful TCEQ's initiative is in reducing emissions of flares will likely have a significant impact on the success of the HGB area in continued ozone improvement. The details of our review of the WOE analysis and data can be reviewed in our TSD Appendix A—HGB MOAAD, Chapter 6. In accordance with 40 CFR 51.908, 51.112, and Appendix W of Part 51, the WOE analysis supports our proposed finding of attainment for HGB by its attainment date.

9. Attainment Demonstration Evaluation. EPA believes that the combination of photochemical modeling and other evidence (WOE) indicates that the HGB area will attain the NAAQS by 2018. This SIP revision represents a significant improvement over past efforts to model the HGB area. Texas has greatly improved the representation of the area's complex meteorology. In addition they have a much more refined emission inventory because of the better reconciliation of HRVOC emissions with ambient data. The modeling projects significant improvement in air quality and all but three of the monitors are projected to attain the standard and the three monitors not demonstrating attainment to the standard are projected to be only slightly above the standard. This modeling evidence taken together with the WOE discussed above, demonstrates that HGB will reach attainment of the 1997 8-hour NAAQS by the end of the ozone season of 2018. In reaching this conclusion, we have considered the uncertainties presented by discrepancies between reported emissions and ambient measurements and uncertainties regarding the performance of flares. We have also considered the significant improvements in ozone levels documented by ambient ozone data and the expected future reductions including those that were not modeled.

In summary, our analysis of TCEQs photochemical modeling and WOE concludes that the area will reach attainment of the 1997 8-hour ozone NAAQS by the end of 2018. Our review confirms that TCEQ's modeling and WOE conform to 40 CFR 51.908, 51.112, Appendix W of Part 51, EPA's guidance and methodologies. Our full evaluation of each modeling and WOE elements of the attainment demonstration submitted by TCEQ in this SIP revision is included in our TSD for this notice.

B. Control Measures Relied Upon in the Attainment Demonstration

1. MECT. The MECT is a portion of the SIP-approved control strategy for the HGB area that caps NO_X emissions beginning January 1, 2002, with a final reduction to the cap occurring in 2007 for stationary sources. The cap represents an approximate reduction in NO_X emissions of 80% from the applicable stationary sources (with some sources reducing more and some reducing less). Facilities are required to demonstrate compliance with the MECT on an annual basis by having sufficient allowances, or other credits as provided in the SIP, to equal the annual NO_X emissions from the previous year. EPA published a final rule approving the MECT program in 66 FR 57252 (November 14, 2001). We have subsequently approved revisions to the MECT on September 6, 2006 and July 16, 2009. *See* 71 FR 52698 and 74 FR 34503.

On March 10, 2010, TCEQ adopted revisions to the MECT Program at 30 TAC Chapter 101, Subchapter H, Division 3, Sections 101.350, 101.351, and 101.353. These revisions amend the SIP-approved MECT program to protect the integrity of the NO_X cap in HGB. Specifically, the TCEQ adopted revisions to 30 TAC 101.350 to revise the definition of ''uncontrolled design capacity'' to ''uncontrolled design capacity to emit'' to allow more flexibility for stationary diesel engines to determine how to comply with NO_X emission requirements in Chapter 117—either through participation in the MECT or through purchasing banked emission credits. The adopted revisions also revise the applicability of the MECT program at 30 TAC 101.351 to require subject sites to first determine the status as a major or minor source under 30 TAC Chapter 117. If the source is major, then it must participate in the MECT. If the source is minor then it can choose to participate under the MECT or meet reduction requirements through the purchase and retirement of banked emission credits. Finally, the adopted revisions modify the allocation of allowance requirements at 30 TAC 101.353 to discontinue the acceptance of late Level of Activity certification forms that could have inflated the cap. The TCEQ also adopted non-substantive revisions throughout to correct typographical errors and Texas Register formatting requirements.

EPA's complete evaluation of the revisions to the MECT adopted on March 10, 2010 and submitted April 6, 2010, is available in our TSD. In summary, we find that the revisions to the MECT will continue to achieve the reduction in stationary source NO_X emissions relied upon in the attainment demonstration.

2. HECT. The HECT program is a mandatory cap and trade program of HRVOCs for covered facilities including vent gas streams, flares, and cooling tower heat exchange systems that emit HRVOCs, as defined in 30 TAC Section 115.10, and that are located at a site subject to Chapter 115, Subchapter H. Facilities are required to meet HRVOC allowances on an annual basis. Facilities may purchase, bank, or sell their allowances for use in the following control period. EPA published final approval of the HECT program on September 6, 2006, as an integral component of the HGB 1-hour ozone attainment demonstration. *See* 71 FR 52659.

On March 10, 2010, the TCEQ adopted revisions to HECT Program at 30 TAC Chapter 101, Subchapter H, Division 6, Sections 101.390–101.394, 101.396 and 101.399–101.401. These revisions reduce the HRVOC cap in Harris County by 25%—a step taken to achieve the reductions shown necessary by the photochemical modeling for HGB 8-hour ozone attainment demonstration discussed in section II. The revisions also change the allocation methodology to promote equitable distribution of allowances as a result of comment and add necessary definitions to implement the allocation methodology changes. The TCEQ also adopted non-substantive revisions throughout to correct typographical errors and Texas Register formatting requirements.

EPA's complete evaluation of the revisions to the HECT adopted on March 10, 2010 and submitted April 6, 2010, is available in our TSD. In summary, we find that the revisions to the HECT to implement the reduction in the Harris County HRVOC cap by 25% will reduce ozone levels and achieve the reductions relied upon in the photochemical modeling for the attainment demonstration.

3. VMEP Measures and TCMs. The SIP included VMEP measures to reduce mobile source emissions of ozone precursors. VMEP measures consist of voluntary mobile source strategies that complement existing regulatory programs through voluntary, non-regulatory changes in local transportation activities or changes in in-use vehicle and engine composition. The types of HGB VMEP measures and NO_X emission reductions are listed in Table 2 and are expected to reduce NO_X emissions by 2.25 tons per day.

TABLE 2—VMEP TYPES AND NO_X EMISSION REDUCTIONS

Program type	NO_X reductions (tons per day)
Alternative Commuting	0.20

TABLE 2—VMEP TYPES AND NO_X EMISSION REDUCTIONS—Continued

Program type	NO_X reductions (tons per day)
Regional Traffic Flow Improvements	0.05
Vehicle Retrofit and Replacement	1.30
Off-road Measures	0.70
Total	2.25

Authority for our approval of VMEP measures is primarily grounded in section 110(a)(2) of the CAA, as well as sections 182(g)(4)(A) and 108. Section 110(a)(2) establishes that a SIP must include ''enforceable emissions limits and other control measures, means or techniques . . . as well as schedules and timetables for compliance, as may be necessary or appropriate to meet the applicable requirements of this chapter.'' In interpreting 110(a)(2) of the CAA, EPA issued a guidance document entitled, ''Guidance on Incorporating Voluntary Mobile Source Emission Reduction Programs in State Implementation Plans (SIPs),'' Memorandum from Richard D. Wilson, Acting Assistant Administrator for Air and Radiation, dated October 24, 1997, which allows for SIP credit for voluntary measures.[3] The Fifth Circuit Court of Appeals upheld, as a reasonable interpretation of the Act, EPA's VMEP policy and allowed the State to consider estimated emissions reductions from a VMEP in the HGB area 1-hour ozone attainment demonstration. *See BCCA Appeal Group* v. *EPA,* 355 F.3d 817, 825 (5th Cir. 2003).

Generally, to obtain credit for a VMEP, the SIP: (1) Identifies and describes a VMEP, (2) Contains projections of emission reductions attributable to the program, along with any relevant technical support documentation, (3) Commits to evaluation and reporting on program implementation and results, and (4) Commits to the timely remedy of any credit shortfall should the VMEP not achieve the anticipated emission reductions. The VMEP emission reduction credits should be quantifiable, surplus (i.e., they are not credited twice), enforceable, permanent, and adequately supported.[4] In addition, the VMEP must be consistent with attainment of the standard and with the reasonable further progress requirements and not interfere with other CAA requirements. The VMEP for an area can be revised by a SIP revision that substitutes or adds other VMEP measures if needed.

As in past commitments, we interpret the VMEP portion of the SIP to be enforceable because the State, through the Houston-Galveston Area Council (H–GAC), has committed to fill any shortfall in credit, thus any enforcement will be against the State. The H–GAC, as the regional metropolitan transportation planning agency for the HGA area, has committed to implement the projects and/or programs outlined in the HGA VMEP submittal. The H–GAC will be responsible for monitoring and reporting the emissions reductions to the TCEQ. The State, through the H–GAC, has committed to cover any VMEP shortfall (of the 2.25 tpd of NO_X committed). The State, through the H–GAC, will remedy any VMEP shortfall that might occur in the VMEP program.

A detailed analysis of all the VMEP measures can be found in our TSD. Each creditable VMEP measure was found to be quantifiable. The VMEP emission reductions are surplus because they are not substitutes for mandatory, required emission reductions. The commitment to monitor, assess and timely remedy any shortfall from implementation of the measures is enforceable against the State. The reductions will continue at least for as long as the time in which they are used by this SIP demonstration, so they are considered permanent. There is a commitment that each measure is adequately supported by personnel and program resources for implementation.

The HGB area's ozone SIP VMEP meets the criteria for credit in the SIP. The State has shown that the credits are quantifiable, surplus, enforceable, permanent, adequately supported, and consistent with the SIP and the CAA. We propose to approve the VMEP portion of the Texas SIP.

TCMs are transportation related projects or activities designed to reduce on-road mobile source emissions. TCMs used as a control measure in the attainment demonstration must be specific, permanent, enforceable and quantifiable.[5] We approved the Texas rule for implementing TCMs in the SIP (30 TAC 114.270) in 67 FR 72379 (December 5, 2002). The SIP included six projects identified by the Houston-Galveston Area Council to reduce mobile source emissions by enhancing pedestrian and bicycle pathways (table 3). The emission reductions estimated from these projects are 0.015 tons per day of NO_X . These projects would reduce NO_X emissions by facilitating non-automobile travel. As the TCMs are part of the SIP, the commitment to implement the TCMs is enforceable through the SIP. Because these projects are specific, permanent, enforceable, and quantifiable we propose to approve them.

TABLE 3—PEDESTRIAN AND BICYCLE TCM PROJECTS IN THE HGB SIP

Project No.	Description	NO_X Reductions (tons per day)
0912–72–145	Holman Street Pedestrian Improvements	0.0001862
0912–72–146	Pedestrian Improvements for Elgin, Ennis, and Alabama Streets	0.0004562
0912–72–147	Pedestrian/Transit Improvement Program for Westheimer Road	0.0137628
0912–71–544	Columbia Tap Rail to Trail Bikeway	0.0002721
0912–71–801	Columbia Tap Union Station Trail Shared Use Path with Bike Lane	0.0005840
0912–71–655	Phase 2 West Houston On-Street Bikeway Network (Terry Hershey Park)	0.0001653
Total		0.0154266

4. Previously Approved State Measures and Federal Measures. Texas also identified other previously approved State ozone control measures and Federal measures applicable to the HGB area which achieved reductions that are relied upon in this attainment demonstration. The State control measures included those approved by

[3] The 1997 guidance is available at *http://www.epa.gov/otaq/stateresources/policy/general/vmep-gud.pdf* .

[4] Id.

[5] Transportation Control Measures: State Implementation Plan Guidance, September 1990 (EPA 450/2–89–020), *http://www.epa.gov/otaq/stateresources/policy/transp/tcms/state_plan_guidance.pdf.*

EPA for: (1) The 1-hour ozone NAAQS (71 FR 52670, September 6, 2006) and (2) additional VOC emission controls for storage tanks, transport vessels and marine vessels in the HGB area (75 FR 15348, March 29, 2010). The Federal measures are regulations on vehicle emissions and fuel. As we have already approved the State measures and promulgated Federal measures to reduce ozone levels it is appropriate that they are relied upon in the attainment demonstration.

5. Summary Regarding Control Measures Relied Upon in the Attainment Demonstration. As noted earlier we must approve the measures relied on as necessary to demonstrate attainment in order to approve the attainment demonstration. These measures must be permanent, enforceable, quantifiable, and surplus. *BCCA Appeal Group,* 355 F.3d at 825. Our review of the control measures not yet approved found that they meet these criteria. We propose to approve these measures and to find that the SIP has sufficient measures to attain the 1997 ozone NAAQS in the HGB area as expeditiously as practicable but no later than June 15, 2019. Table 4 summarizes the measures relied upon for attainment.

TABLE 4—SUMMARY OF MEASURES RELIED UPON IN THE ATTAINMENT DEMONSTRATION

Measure	Comments
1-hour ozone NAAQS measures	Approved (71 FR 52670, September 6, 2006).
VOC emission controls for storage tanks, transport vessels and marine vessels	Approved (75 FR 15348, March 29, 2010).
Federal measures	Federal regulations affecting vehicle emissions.
Revisions to the MECT	Proposed for approval.
Revisions to the HECT	Proposed for approval.
VMEP, Transportation Control Measures	Proposed for approval.

C. RACM

Texas submitted a demonstration that the HGB area has adopted all RACM necessary to demonstrate attainment as expeditiously as practicable with the attainment demonstration as required by CAA section 172(c)(1) and 40 CFR 51.912(d). We consider a control measure to be necessary under the RACM requirement if it: (1) Is technologically feasible, (2) is economically feasible, (3) does not cause ''substantial widespread and long-term adverse impacts'', (4) is not absurd, unenforceable, or impracticable and (5) can advance the attainment date.

To demonstrate that the area meets the RACM requirement Texas (1) identified potentially available control measures with input from stakeholders and (2) analyzed whether the measure would be considered a RACM measure. Texas determined that only one potential control measure, reduction of the HRVOC cap for Harris County, should be adopted to meet the RACM requirement. As discussed above, Texas has adopted a rule to reduce the HRVOC cap for Harris County and we are proposing to approve that rule. We reviewed Texas' RACM process and analysis and believe that Texas has shown that the HGB area has met the CAA RACM requirement. Therefore we propose to approve the demonstration of RACM implementation. For more information please see our TSD.

D. Contingency Measures

CAA sections 172(c)(9) and 182(c)(9) require contingency measures to be implemented in the event of failure to attain the standard by the applicable attainment date. These contingency measures must be fully adopted rules or measures which are ready for implementation quickly upon failure to meet attainment. Implementation of the contingency measures would provide additional emissions reductions of up to three percent of the adjusted base year inventory.[6] For more information on contingency measures, please see the April 16, 1992 General Preamble (57 FR 13498, 13510) and the November 29, 2005 Phase 2 8-hour ozone standard implementation rule (70 FR 71612, 71650). As noted in the November 29, 2005 rule, contingency measures could include Federal measures already scheduled for implementation. In the May 6, 2013 SIP submittal, Texas provided a demonstration that the contingency measures requirement would be met through Federal rules affecting mobile emissions. Table 5 summarizes the contingency measure analysis provided by Texas. We reviewed the analysis provided in the SIP and found the contingency measures provide the necessary reductions in ozone precursor emissions for the year 2019 in the event that the area fails to attain the 1997 ozone NAAQS at the end of 2018. Therefore we propose to approve the failure to attain contingency measures plan as meeting the contingency measures requirements of CAA sections 172(c)(9) and 182(c)(9). For more information please see our TSD.

TABLE 5—2019 CONTINGENCY DEMONSTRATION FOR THE HGB AREA *

Description	NO_X Emissions (tons per day)	VOC Emissions (tons per day)
Adjusted 2018 Base Year Emissions Inventory	1003.92	935.59
Percent for Contingency Calculation (total of 3%)	2.00	1.00
2018 to 2019 Required Contingency Reductions	20.08	9.36
Federal On-Road Reformulated Gasoline (RFG)	6.80	−0.25
Federal On-Road Mobile New Vehicle Certification Standards	22.28	9.50
State Inspection and Maintenance and Anti-Tampering Programs	−0.67	−0.26
Texas Low Emission Diesel (TxLED)	−0.20	0
Federal Non-Road Mobile New Vehicle Certification Standards	3.56	1.78
Non-Road RFG Gasoline	0.00	0.03
Federal Tier I and II Locomotive Standards	0.68	0.01

[6] The adjusted base year inventory is that inventory specified by CAA section 182(b)(1)(B).

TABLE 5—2019 CONTINGENCY DEMONSTRATION FOR THE HGB AREA *—Continued

Description	NO_X Emissions (tons per day)	VOC Emissions (tons per day)
Federal Tier 2 Marine Diesel Standard	0.55	0.02
Total Contingency Reductions	**33.20**	**10.83**
Contingency Excess (+) or Shortfall (−)	**+12.92**	**+1.47**

*The reason for negative numbers for the RFG, Inspection and Maintenance/Anti-Tampering and TxLED programs is that there is a slightly higher benefit in 2018 than in 2019.

E. MVEB

The SIP included an attainment MVEB for 2018 (table 6). The MVEB represents the maximum level of on-road emissions of NO_X and VOC that can be produced in 2018—when considered with emissions from all other sources—which demonstrate attainment of the 1997 8-hour ozone NAAQS. The attainment MVEB submitted on April 6, 2010 was updated in the May 6, 2013 submittal using a more recent EPA mobile source emissions estimation model (MOVES). Previously we determined that the updated 2018 MVEB was ''adequate'' for transportation conformity purposes and must be used for future conformity determinations in the HGB area (78 FR 46947, August 2, 2013). All future transportation improvement programs, projects and plans developed, funded, or approved under Title 23 U.S.C. or the Federal Transit Laws for the HGB area will need to show that they do not result in emissions which exceed the MVEB (40 CFR 93.118). We propose to approve the 2018 MVEB into the SIP.

TABLE 6—2018 HGB ATTAINMENT MVEB

Pollutant	Summer weekday emissions (tons per day)
NO_X	103.34
VOC	50.13

F. General Air Quality Definitions

The April 6, 2010, SIP submittal included revisions to the General Air Quality Definitions at 30 TAC Section 101.1. The General Air Quality definitions are applicable to the entirety of the Texas SIP. While reviewing the April 6, 2010 SIP submittal, we also reviewed other pending revisions to the General Air Quality definitions at 30 TAC 101.1 submitted on June 10, 2005, August 16, 2007, and March 11, 2011. The revisions to the definitions were minor and non-controversial. Our complete evaluation of these pending revisions is available in our TSD. In summary, our analysis demonstrates that the revisions are consistent with the CAA and EPA's regulations at 40 CFR part 51, therefore we propose approval of the revisions to 30 TAC 101.1 submitted on June 10, 2005, August 16, 2007, April 6, 2010 and March 11, 2011. Please see Appendix C of our TSD for our analysis.

III. Proposed Action

We are proposing to approve SIP submittals from the State of Texas for the HGB ozone nonattainment area submitted on April 6, 2010, and May 6, 2013. Specifically, we are proposing to approve the following Texas SIP submittals for the HGB area:

- Attainment demonstration for the 1997 ozone NAAQS
- Revisions to the MECT air pollution control program
- Revisions to the HECT air pollution control program
- VMEP measures and TCMs
- A 2018 year MVEB
- Demonstration of RACM implementation
- Failure to attain contingency measures plan in the event of failure to attain the NAAQS by the applicable attainment date

We are also proposing to approve SIP revisions to the General Air Quality Definitions submitted by the State on June 10, 2005, August 16, 2007, April 6, 2010 and March 11, 2011. We are proposing these actions in accordance with section 110 and part D of the CAA.

IV. Statutory and Executive Order Reviews

Under the CAA, the Administrator is required to approve a SIP submission that complies with the provisions of the Act and applicable Federal regulations. 42 U.S.C. 7410(k); 40 CFR 52.02(a). Thus, in reviewing SIP submissions, EPA's role is to approve state choices, provided that they meet the criteria of the Clean Air Act. Accordingly, this action merely proposes to approve state law as meeting Federal requirements and does not impose additional requirements beyond those imposed by state law. For that reason, this action:

- Is not a ''significant regulatory action'' subject to review by the Office of Management and Budget under Executive Order 12866 (58 FR 51735, October 4, 1993);
- does not impose an information collection burden under the provisions of the Paperwork Reduction Act (44 U.S.C. 3501 *et seq.*);
- is certified as not having a significant economic impact on a substantial number of small entities under the Regulatory Flexibility Act (5 U.S.C. 601 *et seq.*);
- does not contain any unfunded mandate or significantly or uniquely affect small governments, as described in the Unfunded Mandates Reform Act of 1995 (Pub. L. 104–4);
- does not have Federalism implications as specified in Executive Order 13132 (64 FR 43255, August 10, 1999);
- is not an economically significant regulatory action based on health or safety risks subject to Executive Order 13045 (62 FR 19885, April 23, 1997);
- is not a significant regulatory action subject to Executive Order 13211 (66 FR 28355, May 22, 2001);
- is not subject to requirements of section 12(d) of the National Technology Transfer and Advancement Act of 1995 (15 U.S.C. 272 note) because application of those requirements would be inconsistent with the Clean Air Act; and
- does not provide EPA with the discretionary authority to address, as appropriate, disproportionate human health or environmental effects, using practicable and legally permissible methods, under Executive Order 12898 (59 FR 7629, February 16, 1994).

In addition, this proposed rule does not have tribal implications as specified by Executive Order 13175 (65 FR 67249, November 9, 2000), because the SIP is not approved to apply in Indian country located in the state, and EPA notes that it will not impose substantial direct costs on tribal governments or preempt tribal law.

List of Subjects in 40 CFR Part 52

Environmental protection, Air pollution control, Incorporation by reference, Nitrogen dioxide, Ozone, Volatile organic compounds.

Authority: 42 U.S.C. 7401 *et seq.*

Dated: August 28, 2013.

Samuel Coleman,

Acting Regional Administrator, Region 6.

[FR Doc. 2013–21886 Filed 9–6–13; 8:45 am]

BILLING CODE 6560–50–P

DEPARTMENT OF THE INTERIOR

Fish and Wildlife Service

50 CFR Part 17

[Docket No. FWS–R2–ES–2013–0102; FXES11130900000C6–123–FF09E32000]

Endangered and Threatened Wildlife and Plants; 90-Day Finding on a Petition To Delist or Reclassify From Endangered to Threatened Five Southwest Species

AGENCY: Fish and Wildlife Service, Interior.

ACTION: Notice of 90-day petition finding and initiation of status review.

SUMMARY: We, the U.S. Fish and Wildlife Service (Service), announce a 90-day finding on a petition to delist the *Eriogonum gypsophilum* (gypsum wild-buckwheat), and downlist the black-capped vireo (*Vireo atricapilla*), lesser long-nosed bat (*Leptonycteris curasoae yerbabuenae*), *Echinocereus fendleri* var. *kuenzleri* (Kuenzler hedgehog cactus), and *Sclerocactus brevihamatus* ssp. *tobuschii* (Tobusch fishhook cactus) from endangered to threatened under the Endangered Species Act. Based on our review, we find that the petition presents substantial scientific or commercial information indicating that the petitioned actions may be warranted. Therefore, with the publication of this notice, we are initiating a review of the status of these species to determine if the respective actions of delisting and reclassifying are warranted. Section 4(c)(2)(A) of the Act also requires a status review of listed species at least once every 5 years. We are, therefore, electing to conduct each of these 5-year reviews simultaneously with the corresponding 12-month finding. To ensure that this status review is comprehensive, we are requesting scientific and commercial data and other information regarding these species. Based on the status review, we will issue a 12-month finding on the petition, which will address whether the petitioned action is warranted, as provided in section 4(b)(3)(B) of the Act.

DATES: We request that we receive information to consider for the status review on or before November 8, 2013. The deadline for submitting information using the Federal eRulemaking Portal (see **ADDRESSES** section below) is 11:59 p.m. Eastern Time on this date. After November 8, 2013, you must submit information directly to the Division of Policy and Directives Management (see **ADDRESSES** section below). Please note that we might not be able to address or incorporate information that we receive after the above requested date.

ADDRESSES: *Document availability:* You may obtain copies of the July 11, 2012, petition and the 5-year reviews for petitioned species on the internet at *http://www.regulations.gov* at Docket No. FWS–R2–ES–2013–0102.

Written comments: You may submit information by one of the following methods:

(1) *Electronically:* Go to the Federal eRulemaking Portal: *http://www.regulations.gov.* Search for FWS–R2–ES–2013–0102, which is the docket number for this action. You may submit information for the status review by clicking on ''Comment Now!''

(2) *By hard copy:* Submit by U.S. mail or hand-delivery to: Public Comments Processing, Attn: FWS–R2–ES–2013–0102; Division of Policy and Directives Management; U.S. Fish and Wildlife Service; 4401 N. Fairfax Drive, MS 2042–PDM; Arlington, VA 22203.

We will not accept emails or faxes. We will post all information we receive on *http://www.regulations.gov.* This generally means that we will post any personal information you provide us (see the Request for Information section below for more details).

FOR FURTHER INFORMATION CONTACT: Michelle Shaughnessy, Assistant Regional Director, Southwest Regional Ecological Services Office, 500 Gold Avenue SW., Albuquerque, NM 87102; telephone 505/248–6920; facsimile 505/248–6788. If you use a telecommunications device for the deaf (TDD), please call the Federal Information Relay Service (FIRS) at 800–877–8339.

SUPPLEMENTARY INFORMATION:

Background

Section 4(b)(3)(A) of the Act (16 U.S.C. 1533(b)(3)(A)) requires that we make a finding on whether a petition to list, delist, or reclassify a species presents substantial scientific or commercial information indicating that the petitioned action may be warranted. We are to base this finding on information provided in the petition, supporting information submitted with the petition, and information otherwise available in our files. To the maximum extent practicable, we are to make this finding within 90 days of our receipt of the petition and publish our notice of the finding promptly in the **Federal Register**.

Our standard for substantial scientific or commercial information with regard to a 90-day petition finding is ''that amount of information that would lead a reasonable person to believe that the measure proposed in the petition may be warranted'' (50 CFR 424.14(b)). If we find that substantial scientific or commercial information was presented, we are required to promptly initiate a species status review, which we subsequently summarize in our 12-month finding.

Section 3(6) of the Act defines an ''endangered species'' as any species which is in danger of extinction throughout all or a significant portion of its range. A ''threatened species'' is any species that is likely to become an endangered species within the foreseeable future throughout all or a significant portion of its range. Under the Act, we maintain a List of Endangered and Threatened Wildlife and Plants at 50 CFR 17.11 (for animals) and 17.12 (for plants) (List). We amend the List by publishing final rules in the **Federal Register**. Section 4(c)(2)(A) of the Act requires that we conduct a review of listed species at least once every 5 years (5-year review). Section 4(c)(2)(B) requires that we determine: (1) Whether a species no longer meets the definition of threatened or endangered and should be removed from the List (delisted); (2) whether a species listed as endangered more properly meets the definition of threatened and should be reclassified to threatened (downlisted); or (3) whether a species listed as threatened more properly meets the definition of endangered and should be reclassified to endangered (uplisted). Our regulations at 50 CFR 424.21 require that we publish a notice in the **Federal Register** announcing those species currently under active review.

Petition History

On July 16, 2012, we received a petition dated July 11, 2012, from The Pacific Legal Foundation, Jim Chilton, the New Mexico Cattle Growers' Association, New Mexico Farm & Livestock Bureau, New Mexico Federal Lands Council, and Texas Farm Bureau requesting that the *Eriogonum gypsophilum* (gypsum wild-buckwheat) be delisted, and the black-capped vireo (*Vireo atricapilla*), lesser long-nosed bat (*Leptonycteris curasoae yerbabuenae*), *Echinocereus fendleri* var. *kuenzleri* (Kuenzler hedgehog cactus), and *Ancistrocactus tobuschii* (an accepted synonym for *Sclerocactus brevihamatus* ssp. *tobuschii*—Tobusch fishhook

cactus) be reclassified as threatened based on the analysis and recommendation contained in the most recent 5-year review for these taxa. The petition appeared to meet all of the requirements of 50 CFR 424.14(a).

Previous Federal Action

Gypsum Wild-Buckwheat

The gypsum wild-buckwheat was federally listed as threatened on February 18, 1981 (46 FR 5730, January 19, 1981). Critical habitat was designated at the time of listing for the Seven Rivers population in Eddy County, New Mexico. A recovery plan was issued March 30, 1984. The recovery plan has not been revised. A 5-year review was completed on November 9, 2007, in which the Service recommended delisting the species.

Black-Capped Vireo

The black-capped vireo was federally listed as endangered without critical habitat on November 5, 1987 (52 FR 37420, October 6, 1987). A recovery plan was issued September 30, 1991. The recovery plan has not been revised. A 5-year review was completed on July 26, 2007, in which the Service recommended downlisting the species to threatened.

Lesser Long-Nosed Bat

The lesser long-nosed bat was federally listed as endangered without critical habitat on October 31, 1988 (53 FR 38456, September 30, 1988). A recovery plan was issued on March 4, 1997. The recovery plan has not been revised. A 5-year review was completed on August 30, 2007, in which the Service recommended downlisting the species to threatened.

Kuenzler Hedgehog Cactus

The Kuenzler hedgehog cactus was federally listed as endangered without critical habitat on November 28, 1979 (44 FR 61924, October 26, 1979). A recovery plan was issued on March 28, 1985. The recovery plan has not been revised. A 5-year review was completed on June 7, 2005, in which the Service recommended downlisting the species to threatened.

Tobusch Fishhook Cactus

The Tobusch fishhook cactus was federally listed as endangered without critical habitat on December 7, 1979 (44 FR 64736, November 7, 1979). A recovery plan was issued on March 18, 1987. The recovery plan has not been revised. A 5-year review was completed on January 5, 2010, in which the Service recommended downlisting the species to threatened.

Species Information

Gypsum Wild-Buckwheat

Gypsum wild-buckwheat is a rare, regionally endemic, perennial plant species (Service 2007a, p. 8). It occupies gypsum soils and gypsum outcrops of the Permian-age Castile Formation. These habitats are dry and nearly barren except for common species of gypsophilic plants and gypsum wild-buckwheat. Gypsum wild-buckwheat reproduces both by producing seed and also by producing clone rosettes from rhizomes or rootsprouts. There are only three known populations of gypsum wild-buckwheat, and all occur in Eddy County, in southeastern New Mexico (Service 2007a, pp. 8–12). Only one population (Seven River Hills) was known at the time of listing. Two additional populations were discovered in 1988 in the Yeso Hills of southern Eddy County, New Mexico, one near Black River Village and another at Ben Slaughter Draw below Ben Slaughter Spring. For more information on the life history, biology, and distribution of gypsum wild-buckwheat, see the 2007 5-year review of the species.

Black-Capped Vireo

The black-capped vireo is a small (10 to 12 centimeters (cm) (4 to 5 inches (in)) long), insect-eating, migratory songbird (Service 2007b, p. 7). They nest from Oklahoma south through central Texas to the Edwards Plateau, then south to the northern portion of Mexico. Breeding habitat is quite variable across its range, but is generally shrublands with a distinctive patchy structure. The shrub vegetation is mostly deciduous and generally extends from the ground to about 2 meters (m) (6 feet (ft)) above ground and covers about 30 to 60 percent of the total area. Open grassland separates the clumps of shrubs. Black-capped vireos may live for more than 5 years, and usually return year after year to the same territory to breed. They begin to migrate to the wintering grounds on Mexico's western coast in July and are gone from Texas by mid-September (Service 2007b, p. 7). For more information on the life history, biology, and distribution of black-capped vireo, see the 2007 5-year review of the species.

Lesser Long-Nosed Bat

The lesser long-nosed bat is one of four members of the tropical bat family Phyllostomidae found in the United States. The bat's core diet is believed to consist of pollen, nectar, and fruits of columnar cacti and agaves. These bats depend on caves and abandoned mines and tunnels for day roosting sites. Night roosts include the bats' day roosts as well as other caves, mines, rock crevices, trees and shrubs, and occasionally abandoned buildings. They migrate seasonally from Mexico to southern Arizona and southwestern New Mexico. For more information on the life history, biology, and distribution of lesser long-nosed bat, see the 2007 5-year review of the species.

Kuenzler Hedgehog Cactus

A Kuenzler hedgehog cactus individual may be single stemmed or branched. The stems are normally 15 cm (6 in) long and 10 cm (4 in) wide. Typical Kuenzler hedgehog cactus habitat occurs on gentle, gravelly to rocky slopes and benches on limestone or limy sandstone along the lower fringes of the pinyon-juniper woodland at elevations of 1,600 to 2,000 m (5,200 to 6,600 ft). The recovery plan for Kuenzler hedgehog cactus identified two populations of cacti in the Rio Hondo and Rio Peñasco drainages in Lincoln County (Service 1985). However, by the time of the 2005 5-year review, there were 11 documented population centers (Service 2005). For more information on the life history, biology, and distribution of Kuenzler hedgehog cactus, see the 2005 5-year review of the species.

Tobusch Fishhook Cactus

The Tobusch fishhook cactus is a small, round cactus, usually 5.1 to 7.6 cm (2 to 3 in) tall and up to 8.9 cm (3.5 in) in diameter, with light yellow spines with red tips. The lower central spines are hooked at the tip, like a fishhook. It produces yellow to cream flowers about 3.0 to 3.8 cm (1 to 1.5 in) long and wide during February through March. The fruit is fleshy and green, ripening to pink or pinkish-brown by late spring or early summer. The seeds are black.

The Tobusch fishhook cactus grows in discontinuous patches of very shallow, moderately alkaline, rocky loams or clay soils (primarily of the Tarrant, Ector, or Eckrant series) over massive, fractured limestone bedrock (usually the Edwards formation or an equivalent formation). The sites are open, in full sunlight, with a thin herbaceous cover of grasses and other herbaceous species, but within a matrix of woodland or savanna of live oak-juniper woodland community. In 1979 when the species was federally listed as endangered, fewer than 200 individuals had been documented in Bandera and Kerr Counties, Texas. The Texas Parks and Wildlife Department Natural Diversity Database indicates that, by 1999, researchers had documented 3,395 extant individuals in 8 counties of the Edwards Plateau

(Bandera, Edwards, Kerr, Kimble, Kinney, Real, Uvalde, and Val Verde). For more information on the life history, biology, and distribution of Tobusch fishhook cactus, see the 2010 5-year review of the species.

Evaluation of Information for This Finding

Section 4 of the Act (16 U.S.C. 1533) and its implementing regulations at 50 CFR 424 set forth the procedures for adding a species to, or removing a species from, the Federal Lists of Endangered and Threatened Wildlife and Plants. A species may be determined to be an endangered or threatened species due to one or more of the five factors described in section 4(a)(1) of the Act:

(A) The present or threatened destruction, modification, or curtailment of its habitat or range;

(B) Overutilization for commercial, recreational, scientific, or educational purposes;

(C) Disease or predation;

(D) The inadequacy of existing regulatory mechanisms; or

(E) Other natural or manmade factors affecting its continued existence.

We must consider these same five factors in delisting a species. We may delist a species according to 50 CFR 424.11(d) if the best available scientific and commercial data indicate that the species is neither endangered nor threatened for the following reasons:

(1) The species is extinct,

(2) The species has recovered and is no longer endangered or threatened, or

(3) The original scientific data used at the time the species was classified were in error.

In considering what factors might constitute threats, we must look beyond the mere exposure of the species to the factor to determine whether the species responds to the factor in a way that causes actual impacts to the species. If there is exposure to a factor, but no response, or only a positive response, that factor is not a threat. If there is exposure and the species responds negatively, the factor may be a threat and we then attempt to determine how significant a threat it is. If the threat is significant, it may drive or contribute to the risk of extinction of the species such that the species may warrant listing as threatened or endangered as those terms are defined by the Act. This does not necessarily require empirical proof of a threat. The combination of exposure and some corroborating evidence of how the species is likely impacted could suffice. The mere identification of factors that could impact a species negatively may not be sufficient to compel a finding that listing may be warranted. The information shall contain evidence sufficient to suggest that these factors may be operative threats that act on the species to the point that the species may meet the definition of threatened or endangered under the Act.

In making this 90-day finding, we evaluated whether information regarding threats to the gypsum wild-buckwheat, black-capped vireo, lesser long-nosed bat, Kuenzler hedgehog cactus, and Tobusch fishhook cactus, as presented in the petition and other information available in our files, is substantial, thereby indicating that the petitioned action may be warranted. Our evaluation of this information is presented below.

Information Provided in the Petition

The petitioner requested the Service delist the gypsum wild-buckwheat and reclassify the black-capped vireo, lesser long-nosed bat, Kuenzler hedgehog cactus, and Tobusch fishhook cactus as threatened based on the analysis and recommendations contained in the most recent 5-year reviews of these taxa. The petition cited the 5-year reviews for each of these respective species as supporting information for the petition, but provided no other information.

Evaluation of Information Provided in the Petition and Available in Service Files

We completed 5-year reviews for each of these five species, which included recommendation of status changes. Each 5-year review contains general background and life-history information, an overview of recovery criteria, an analysis of threats to each taxon based on the five listing factors found in section 4 of the Act, and recommendation of status change. In each 5-year review conducted for the five petitioned species, we analyzed the threats specific to each taxon based on the five listing factors in section 4 of the Act.

Gypsum Wild-Buckwheat

The 2007 5-year review for the gypsum wild-buckwheat recommended delisting of the species. The rationale for this recommendation was that the primary threats to the species at the time of listing were no longer deemed significant (Service 2007a, p. 12).

At the time of listing, gypsum wild-buckwheat was known from only a single population on the Seven Rivers Hills. Since the time of listing, two additional populations of gypsum wild-buckwheat were documented at Black River and Ben Slaughter Draw in Eddy County, Texas (Service 2007a, p. 12). All three known populations contain between 11,000 and 18,000 plants.

The listing determination for gypsum wild-buckwheat cited off-road-vehicles, grazing, and reservoir development as threats to this species (Service 2007a, p. 12). Due to the expanded range of the species at the time of the 5-year review, these stressors were no longer cited as threats to the species. However, all of the known gypsum wild-buckwheat habitat occurs in areas that are now known to have high potential for mineral extraction and associated development, especially oil and gas. At the time of the 5-year review, this new threat was thought to be mitigated by the Bureau of Land Management's Special Management Areas classification on significant portions of each gypsum wild-buckwheat population.

In summary, we found that the threats previously identified may no longer be acting on the species at a level that causes the species to be in danger of extinction. Further, the range of the species has expanded, and there is some level of management of newly identified threats in those areas. Therefore, we find there is substantial information indicating that the species may no longer in danger of extinction now or in the foreseeable future, and that delisting may be warranted. This conclusion is based primarily on the analyses found in the 2007 5-year review, which was based on the best scientific information available at that time. Since the time of the 5-year review, we have received no information that would conflict with the conclusions found in that review.

Black-Capped Vireo

The 2007 5-year review for the black-capped vireo recommended reclassification of the species from endangered to threatened. The primary rationale for this recommendation was that the magnitude of threats to the species has been reduced since the time of listing, and that the range of the species has expanded (Service 2007b, pp. 22–24).

At the time of listing, the estimated population of black-capped vireos consisted of 256 to 525 pairs in Oklahoma (4 counties), Texas (21 counties), and Mexico (1 state). Since 2000, the known population consists of 6,200 vireos in Oklahoma (3 counties), Texas (38 counties), and Mexico (3 states) (Service 2007b, p. 22).

The major threats to the black-capped vireo identified at the time of listing included habitat loss through land use conversion, grazing and browsing by domestic and wild herbivores, and brood parasitism by brown-headed

cowbirds (*Molothrus ater*). As discussed in the 5-year review, the threat of habitat destruction by domestic livestock appears to have decreased, based upon the decrease in density and abundance of livestock in those regions of particular concern during the original listing. However, it appears the density of white-tailed deer (*Odocoileus virginianus*) and exotic ungulates may have increased in the same regions, which may be a concern for habitat availability. Information discussed in the 5-year review concerning brown-headed cowbirds suggests that the species may be decreasing in abundance where its range overlaps the black-capped vireo, at least in Texas. Additionally, in the black-capped vireo's U.S. range, brood parasitism appears to be effectively managed at the major black-capped vireo populations occurring on public land, and supplemented by cowbird control programs on private lands.

In summary, we found that threats to the species identified at the time of listing do not appear to be acting on the species as severely as previously thought. Further, the range and abundance of the species appears to have expanded, and some level of management exists in regard to threats in those areas. Therefore, we find there is substantial information that the species may no longer be in imminent danger of extinction, and that reclassification may be warranted. This conclusion is based primarily on the analysis found in the 2007 5-year review, which was based on the best scientific information available at that time. Since the time of the 5-year review, we have received no information that would conflict with the conclusions of that review.

Lesser Long-Nosed Bat

The 2007 5-year review for the lesser long-nosed bat recommended reclassification of the species from endangered to threatened. The primary rationale for this recommendation was that information indicates the species may be more abundant than was known at the time of listing (Service 2007c).

At the time of listing, the lesser long-nosed bat occurred at relatively low population numbers (about 500 individuals in Arizona) and exhibited a declining trend (Service 2007c). Information gathered since the listing shows higher population numbers and a generally stable-to-increasing trend (Service 2007c).

The primary threats identified at the time of listing were habitat destruction and disruption, disturbance of roosting sites, loss of food sources, and direct killing by humans. Information in the 5-year review suggests that these threats persist and may actually be increasing in some areas. However, the severity of these threats may be reduced as a result of the increased abundance of the species.

In summary, we found that, while threats to the lesser long-nosed bat persist, the magnitude of these threats may be reduced due to the potential increased abundance of the species since the time of listing. Therefore, we find there is substantial information that the species may no longer be in imminent danger of extinction, and that reclassification may be warranted. This conclusion is based primarily on the analyses found in the 2007 5-year review which was based on the best scientific information available at that time. Since the time of the 5-year review, we have received no information that would conflict with the conclusions found in the review.

Kuenzler Hedgehog Cactus

The 5-year review for the Kuenzler hedgehog cactus recommended reclassification of the species from endangered to threatened. The primary rationale for this recommendation was that the threats to the species have been reduced as compared to the threats at the time of listing, and the distribution and abundance of the species has increased (Service 2005).

At the time of listing, only two populations with fewer than 200 individuals were known. However, by the time of the 5-year review, an estimated 11 populations had a total of more than 5,000 individuals. While these populations are scattered and usually not locally abundant, this distribution reflects a wider range and higher overall abundance than was known at the time of listing. Further, most of the known populations of Kuenzler hedgehog cactus occur on Federal lands. Federal land management agencies have inventoried most of the Kuenzler hedgehog cactus habitats within their jurisdictions in order to consult with the Service and avoid serious impacts to occupied habitats.

Threats at the time of listing were collection and habitat degradation due to road improvements, grazing, and real estate development. As discussed in the 5-year review, collection of Kuenzler hedgehog cactus from its natural habitats has not had a significant observable impact on the known populations. The potential threat of collection is likely mitigated to some extent by the fact that most populations are relatively remote and less likely to be impacted by casual collectors. Further, commercial growers are offering greenhouse-grown plants and seeds to hobbyists who might have otherwise obtained their plants or seeds from natural populations.

Habitat destruction due to road construction and home building has affected a very small portion of the area occupied by Kuenzler hedgehog cactus. At the time of the 5-year review, no significant mining or oil and gas production activities took place within the habitat of this cactus. Most of the known occupied habitats occur in relatively remote areas, which are unlikely to be converted to land uses other than open range for livestock grazing. Evidence continues to indicate that livestock grazing may continue to impact Kuenzler hedgehog cactus through increased erosion and removal of insulating cover that may affect the success of seedling establishment.

In summary, we found that, while livestock grazing may continue to affect the species, collection and habitat modification due to development do not appear to be as severe as they were thought to be at the time of listing. Further, the range of the species appears to have expanded, and some level of management occurs in those areas. Therefore, we find there is substantial information that the species may no longer be in imminent danger of extinction, and that reclassification may be warranted. This conclusion is based primarily on the analyses found in the 2005 5-year review, which was based on the best scientific information available at that time. Since the time of that 5-year review, we have received no readily available information that would conflict with the conclusions found in the review.

Tobusch Fishhook Cactus

The 5-year review for the Tobusch fishhook cactus recommended reclassification from endangered to threatened. The primary rationale for this recommendation was that the primary threats to the species at the time of listing have been reduced or were not as severe as originally determined, and that the distribution and abundance of the species have increased (Service 2010).

At the time of listing, only 200 individuals were known. The status of Tobusch fishhook cactus is now thought to be significantly more secure than when it was listed. The cactus has been documented at 10 protected sites, and its known range now extends to eight counties in the Edwards Plateau of central Texas.

The threats identified at the time of listing were collection and habitat

modification and loss due to real estate development, livestock damage, and other natural factors. As discussed in the 2010 5-year review, legally propagated Tobusch fishhook cactus are now available, which suggests the threat of illegal collection may no longer be as severe a threat as it was at the time of listing. Further, livestock trampling and herbivory were not identified as significant causes of mortality or damage to Tobusch fishhook cactus plants. While a significant ongoing trend of subdividing large ranches persists in Texas, relatively little urban or industrial development was occurring within the range of the species at the time of the 5-year review. However, information discussed in the 5-year review indicates that the Tobusch fishhook cactus weevil parasitizes and kills plants, and further suggests that the weevil may have caused significant declines in some populations.

In summary, we found that, while development and weevil parasitism may continue to impact the species, collection and livestock grazing do not appear to be acting on the species as severely as they were thought to be at the time of listing. Further, the range of the species appears to have expanded. Therefore, we find there is substantial information that the species may no longer be in imminent danger of extinction, and that reclassification may be warranted. This conclusion is based primarily on the analyses found in the 2010 5-year review, which was based on the best scientific information available at that time. Since the time of the 5-year review, we have received no readily available information that would conflict with the conclusions found in the review.

Finding

On the basis of our determination under section 4(b)(3)(A) of the Act, we find that information in the petition and readily available in our files presents substantial scientific or commercial information indicating that delisting the gypsum wild-buckwheat and reclassifying black-capped vireo, lesser long-nosed bat, Kuenzler hedgehog cactus, and Tobusch fishhook cactus from endangered to threatened may be warranted.

Because we have found that the petition presents substantial information indicating that delisting the gypsum wild-buckwheat, and reclassifying black-capped vireo, lesser long-nosed bat, Kuenzler hedgehog cactus, and Tobusch fishhook cactus may be warranted, we are initiating status reviews for each taxon to determine whether the petitioned actions are warranted.

The ''substantial information'' standard for a 90-day finding, under section 4(b)(3)(A) of the Act and 50 CFR 424.14(b) of our regulations, differs from the Act's ''best scientific and commercial data'' standard that applies to a status review to determine whether a petitioned action is warranted. A 90-day finding does not constitute a status review under the Act. In a 12-month finding, we will determine whether a petitioned action is warranted after we have completed a thorough status review of the species, which is conducted following a substantial 90-day finding. Because the Act's standards for 90-day and 12-month findings are different, as described above, a substantial 90-day finding does not mean that the 12-month finding will result in a warranted finding.

5-Year Reviews

Section 4(c)(2)(A) of the Act requires that we conduct a review of listed species at least once every 5 years. We are then, under section 4(c)(2)(B), to determine, on the basis of such a review, whether or not any species should be removed from the List (delisted), or reclassified from endangered to threatened, or threatened to endangered. Our regulations at 50 CFR 424.21 require that we publish a notice in the **Federal Register** announcing those species currently under review. This notice announces our active review of the gypsum wild-buckwheat, black-capped vireo, lesser long-nosed bat, Kuenzler hedgehog cactus, and Tobusch fishhook cactus.

Request for Information

When we make a finding that a petition presents substantial information indicating that delisting or reclassifying a species may be warranted, we are required to promptly initiate review of the status of the species (status review). For the status review to be complete and based on the best available scientific and commercial information, we request information on gypsum wild-buckwheat, black-capped vireo, lesser long-nosed bat, Kuenzler hedgehog cactus, and Tobusch fishhook cactus from governmental agencies, Native American tribes, the scientific community, industry, and any other interested parties. We seek information on:

(1) The species' biology, range, and population trends, including:

(a) Habitat requirements for feeding, breeding, and sheltering;

(b) Genetics and taxonomy;

(c) Historical and current range including distribution patterns;

(d) Historical and current population levels, and current and projected trends; and

(e) Past and ongoing conservation measures for the species, its habitat or both.

(2) The factors that are the basis for making delisting and downlisting determinations for a species under section 4(a) of the Act (16 U.S.C. 1531 *et seq.*), which are:

(a) The present or threatened destruction, modification, or curtailment of its habitat or range;

(b) Overutilization for commercial, recreational, scientific, or educational purposes;

(c) Disease or predation;

(d) The inadequacy of existing regulatory mechanisms; or

(e) Other natural or manmade factors affecting its continued existence.

Please include sufficient information with your submission (such as scientific journal articles or other publications) to allow us to verify any scientific or commercial information you include.

Submissions merely stating support for or opposition to the action under consideration without providing supporting information, although noted, will not be considered in making a determination. Section 4(b)(1)(A) of the Act directs that determinations as to whether any species is an endangered or threatened species must be made ''solely on the basis of the best scientific and commercial data available.''

You may submit your information concerning this status review by one of the methods listed in the **ADDRESSES** section. If you submit information via *http://www.regulations.gov,* your entire submission—including any personal identifying information—will be posted on the Web site. If your submission is made via a hardcopy that includes personal identifying information, you may request at the top of your document that we withhold this personal identifying information from public review. However, we cannot guarantee that we will be able to do so. We will post all hardcopy submissions on *http://www.regulations.gov.*

Information and supporting documentation that we received and used in preparing this finding is available for you to review at *http://www.regulations.gov,* or by appointment, during normal business hours, at the U.S. Fish and Wildlife Service, Southwesten Region Ecological Services Office (see **FOR FURTHER INFORMATION CONTACT**).

References Cited

A complete list of references cited is available on the Internet at *http://www.regulations.gov* and upon request from the Southwest Region Ecological Services Office (see **FOR FURTHER INFORMATION CONTACT**).

Authors

The primary authors of this notice are the staff members of the Southwest Region Ecological Services Office.

Authority

The authority for this action is the Endangered Species Act of 1973, as amended (16 U.S.C. 1531 *et seq.*).

Dated: August 26, 2013.

Rowan W. Gould,

Acting Director, U.S. Fish and Wildlife Service.

[FR Doc. 2013–21809 Filed 9–6–13; 8:45 am]

BILLING CODE 4310–55–P

Notices

Federal Register

Vol. 78, No. 174

Monday, September 9, 2013

This section of the FEDERAL REGISTER contains documents other than rules or proposed rules that are applicable to the public. Notices of hearings and investigations, committee meetings, agency decisions and rulings, delegations of authority, filing of petitions and applications and agency statements of organization and functions are examples of documents appearing in this section.

DEPARTMENT OF AGRICULTURE

Food and Nutrition Service

Agency Information Collection Activities: Proposed Collection; Comment Request—Form FNS–13, Annual Report of State Revenue Matching (National School Lunch Program)

AGENCY: Food and Nutrition Service (FNS), USDA.

ACTION: Notice.

SUMMARY: In accordance with the Paperwork Reduction Act of 1995, this notice invites the general public and other public agencies to comment on this proposed information collection which concerns the appropriation and use of State funds for the National School Lunch, School Breakfast and Special Milk Programs. This collection is a revision of a currently approved collection.

DATES: Written comments must be received on or before November 8, 2013.

ADDRESSES: Comments are invited on: (a) Whether the proposed collection of information is necessary for the proper performance of the functions of the agency, including whether the information shall have practical utility; (b) the accuracy of the agency's estimate of the burden of the proposed collection of information, including the validity of the methodology and assumptions that were used; (c) ways to enhance the quality, utility, and clarity of the information to be collected; and (d) ways to minimize the burden of the collection of information on those who are to respond, including use of appropriate automated, electronic, mechanical, or other technological collection techniques or other forms of information technology. Written comments may be sent to Jon Garcia, Acting Branch Chief, Program Analysis and Monitoring Branch, Food and Nutrition Service, U.S. Department of Agriculture, 3101 Park Center Drive, Room 640, Alexandria, VA 22302. Comments will also be accepted through the Federal eRulemaking Portal. Go to *http://www.regulations.gov,* and follow the online instructions for submitting comments electronically.

All written comments will be open for public inspection at the office of the Food and Nutrition Service during regular business hours (8:30 a.m. to 5 p.m. Monday through Friday) at 3101 Park Center Drive, Room 640, Alexandria, Virginia 22302.

All responses to this notice will be summarized and included in the request for Office of Management and Budget approval. All comments will be a matter of public record.

FOR FURTHER INFORMATION CONTACT: Requests for additional information or copies of this information collection should be directed to Jon Garcia at (703) 305–2600.

SUPPLEMENTARY INFORMATION: *Title:* 7 CFR Part 210, National School Lunch Program.

Form Number: FNS–13.

OMB Number: 0584–0075.

Expiration Date: 2/28/2014.

Type of Request: Revision of a currently approved collection.

Abstract: FNS uses the Annual Report of State Revenue Matching, Form FNS–13, to collect data on State revenue matching to meet the reporting required by 7 CFR 210.17(g). The Food and Nutrition Service administers the National School Lunch Program, the School Breakfast Program, and the Special Milk Program as mandated by the Richard B. Russell National School Lunch Act (NSLA), as amended (42 U.S.C. 1751, *et seq.*), and the Child Nutrition Act of 1966, as amended (42 U.S.C. 1771, *et seq.*). Information on school program operations is collected from State agencies on a yearly basis to monitor and make adjustments to State agency funding requirements. As provided in 7 CFR 210.17, each school year, State revenues must be appropriated or used specifically by the State for Federal school lunch program purposes. The amount that must be appropriated or used generally is at least 30% of the funds received by the State under Section 4 of the NSLA (42 U.S.C. 1753) during the school year beginning July 1, 1980, unless exemptions or waivers are met, as described in 7 CFR 210.17. The form is an intrinsic part of the accounting system currently being used by the subject programs to ensure proper reimbursement as well as to facilitate adequate recordkeeping. The FNS–13 form is provided to States through a web-based Federal reporting system and, 100 percent of the information is collected through electronic means. There are no changes required for the instructions on FNS–13. However, this revision made significant program adjustment to reporting burden hours as a result of automation and the advancement of State systems technology. The response time (estimated average number of hours per response) is decreased from the previously approved 80 hours to 8 hours and hence the total number of burden hours is reduced from 4,560 to 456 hours.

Affected Public: State agencies.

Estimated Number of Respondents: 57 State agencies.

Estimated Number of Responses per Respondent: 1.

Estimated Total Annual Responses: 57.

Estimated Time per Response: 8 hours.

Estimated Total Annual Burden on Respondents: 456 hours.

See the table below for estimated total annual burden for each type of respondent.

Respondent	Estimated number of respondent	Responses annually per respondent	Total annual responses	Estimated average number of hours per response	Estimated total hours
Reporting Burden: State agency	57	1.00	57	8	456

Respondent	Estimated number of respondent	Responses annually per respondent	Total annual responses	Estimated average number of hours per response	Estimated total hours
Total Reporting Burden	57	1.00	57	8	456

Dated: August 30, 2013.

Audrey Rowe,

Administrator, Food and Nutrition Service.

Attachment: Appendix A: FNS–13 Annual Report of State Revenue Matching.

Appendix A—Sample Version of the Proposed FNS–13 and Instructions

BILLING CODE 3410–30–P

FORM APPROVED OMB 0584-0075
Expiration Date: XX/XX/XXXX

U.S. DEPARTMENT OF AGRICULTURE
FOOD AND NUTRITION SERVICE

ANNUAL REPORT OF STATE REVENUE MATCHING

See Instructions on Reverse

Submit original to the Regional Administrator, Food and Nutrition Service, Retain one copy. Report must be submitted by October 31.

According to the Paperwork Reduction Act of 1995, no persons are required to respond to a collection of information unless it displays a valid OMB control number. The valid OMB control number for this information collection is 0584-0075. The time required to complete this information collection is estimated to average 8 hours per response, including the time for reviewing instructions, searching existing data sources, gathering and maintaining the data needed, and completing and reviewing the collection of information.

1. STATE	2A. STATE AGENCY	3. REPORT FOR SCHOOL YEAR ENDING	4. FINAL REPORT *("X" One)*
	2B. AGENCY CODE (7 Digits)	June 30,	☐ YES ☐ NO

NON-FEDERAL REVENUES	5. STATE REVENUES TO BE COUNTED TOWARD THE STATE REVENUE MATCHING REQUIREMENT
(NOTE: Do not enter cents in Item 5. All amounts must be rounded to nearest whole dollar.)	

6. REMARKS

7. CERTIFICATION

I certify that this report is true and correct to the best of my knowledge and belief.

8. SIGNATURE	9. TITLE	10. DATE SIGNED

FORM FNS-10 (07-13) Previous Editions Obsolete — Electronic Form Version Designed in Adobe 10.0 Version

No further monies or other benefits may be paid out under these programs unless this report is complete and filed as required by existing regulations (7 CFR - 210).

SBU

INSTRUCTIONS

PREPARATION AND DISTRIBUTION - Submit on-line via the Food Programs Reporting System (FPRS).

PURPOSE - This report provides data necessary to monitor the State Revenue Matching Requirement under the National School Lunch Program (NSLP).

REPORTING PERIOD - The period covered by this report shall be the school year (July 1 - June 30). The report must be submitted on-line via FPRS by October 31.

STATE AGENCY RESPONSIBILITIES - Each State agency is responsible for submitting a report on "actual data." Further, the State agency must provide, at the request of FNS, adequate corrections and/or clarifications on a timely basis.

All items are self-explanatory except.

ITEM 4 - If this is not a final report, indicate in the "Remarks" section why it is not the final report and when the final report will be submitted.

ITEM 5 - Enter the amount of non-Federal revenue applicable to the State Revenue Matching Requirement (SRMR). This refers to those revenues used specifically by the State for school nutrition program purposes (NSLP, SBP, and SMP in schools) as defined in the NSLP regulations and must be documented by an audit trail to ensure that revenues provided are used for the stated purpose. For example: funds appropriated by a State and used for reimbursing schools on a per-meal basis for meals served could be counted in this item.

[FR Doc. 2013–21764 Filed 9–6–13; 8:45 am]

BILLING CODE 3410–30–C

DEPARTMENT OF AGRICULTURE

Forest Service

Beaverhead-Deerlodge National Forest, Montana; Supplemental Environmental Impact Statement for the Beaverhead-Deerlodge National Forest Land and Resource Management Plan To Comply With a District of Montana Court Order (Temporary Roads)

AGENCY: Forest Service, USDA.

ACTION: Notice of intent to prepare a supplemental environmental impact statement.

SUMMARY: The Beaverhead-Deerlodge National Forest will prepare a Supplemental Environmental Impact Statement (SEIS) to the 2009 Beaverhead-Deerlodge National Forest Land and Resource Management Plan (Forest Plan) environmental analysis in response to a May 24, 2013 Order from the U.S. District Court for the District of Montana. The Court directed the Forest Service to ''. . . supplement its EIS for the Forest Plan to explain or support, if possible, its decision to exclude temporary roads from the road density objectives . . . .'' The supplement will address the Forest Plan Goal for Wildlife Security and density of roads and trails open to motorized use displayed in Tables 13 and 14 on pages 45–47 of the Forest Plan.

DATES: Scoping is not required for supplements to environmental impact statements (40 CFR 1502.9(c)(4)). Review and comments will be solicited once the Draft SEIS is filed with EPA. The Draft SEIS is expected in February, 2014.

ADDRESSES: The line officer responsible for the decision is the Beaverhead-Deerlodge National Forest Supervisor, 420 Barrett Street, Dillon, MT 59725.

FOR FURTHER INFORMATION CONTACT: Jan Bowey at 406–842–5432 or email *jbowey@fs.fed.us*. Individuals who use telecommunication devices for the deaf (TDD) may call the Federal Information Relay Service (FIRS) at 1–800–877–8339 between 8 a.m. and 8 p.m., Eastern Time, Monday through Friday.

SUPPLEMENTARY INFORMATION:

Purpose and Need for Action

The Forest Plan provides management direction for activities on the Beaverhead-Deerlodge National Forest for the next 10 to 15 years, including direction on eight revision topics (vegetation, wildlife, aquatic resources, recreation and travel management, fire management, livestock grazing, timber and recommended wilderness). In 2012, Native Ecosystems Council and Alliance for the Wild Rockies filed a complaint in U.S. District Court for the District of Montana (case 9:12–cv–00027–DLC) alleging the Forest Plan failed to ensure elk viability because the Forest Service did not disclose and consider the best available science in its analysis of road density. In a May 24, 2013 Order, the U.S. District Court for the District of Montana found the Forest Service ''. . . complied with the general requirements of the 1982 viability regulation for elk and adequately disclosed the science upon which it relied to determine appropriate road density levels for areas with different management goals. . . . However, the Forest Service did not explain or support its decision to exclude temporary roads from the road density objectives.'' Therefore, there is a need to evaluate the effects of temporary roads to comply with the court's order.

Proposed Action

We are uncertain if there is a need to change management direction in the Forest Plan. A determination will be made based upon the analysis of the effects of temporary road construction and use. The Draft SEIS may or may not propose an amendment to the Forest Plan.

We expect to have a Draft SEIS available for public review and comment in February, 2014. The comment period for the Draft SEIS will be 90 days from the date the Environmental Protection Agency publishes the notice of availability in the **Federal Register**. We believe, at this early stage, it is important to give reviewers notice of several court rulings related to public participation in the environmental review process. First, reviewers of draft environmental impact statements must structure their participation in the environmental review of the proposal so that it is meaningful and alerts an agency to the reviewer's position and contentions. *Vermont Yankee Nuclear Power Corp.* v.

NRDC, 435 U.S. 519, 553 (1978). Also, environmental objections that could have been raised at the draft environmental impact statement stage but are not raised until after completion of the final environmental impact statement may be waived or dismissed by the courts. *City of Angoon* v. *Hodel,* 803 F.2d 1016, 1022 (9th Circ. 1986) and *Wisconsin Heritages, Inc.* v. *Harris,* 490 F. Supp. 1334, 1338 (E.D. Wis. 1980). Because of these court rulings, it is very important that those interested in this analysis participate by the close of the 90-day comment period so substantive comments and objections are made available to the Forest Service at a time when it can meaningfully consider and respond to them in the Final SEIS.

Nature of Decision To Be Made

Based on the SEIS, the Forest Supervisor will determine whether or not additional management direction will be incorporated into the Beaverhead-Deerlodge National Forest Land and Resource Management Plan.

Dated: August 29, 2013.

Timothy Garcia,

Acting Forest Supervisor.

[FR Doc. 2013–21806 Filed 9–6–13; 8:45 am]

BILLING CODE 3410–11–P

DEPARTMENT OF COMMERCE

Economic Development Administration

Notice of Petitions by Firms for Determination of Eligibility To Apply for Trade Adjustment Assistance

AGENCY: Economic Development Administration, Department of Commerce.

ACTION: Notice and opportunity for public comment.

SUMMARY: Pursuant to Section 251 of the Trade Act 1974, as amended (19 U.S.C. 2341 *et seq.*), the Economic Development Administration (EDA) has received petitions for certification of eligibility to apply for Trade Adjustment Assistance from the firms listed below. Accordingly, EDA has initiated investigations to determine whether increased imports into the United States of articles like or directly competitive with those produced by each of these firms contributed importantly to the total or partial separation of the firm's workers, or threat thereof, and to a decrease in sales or production of each petitioning firm.

LIST OF PETITIONS RECEIVED BY EDA FOR CERTIFICATION ELIGIBILITY TO APPLY FOR TRADE ADJUSTMENT ASSISTANCE

[8/22/2013 through 9/3/2013]

Firm name	Firm address	Date accepted for investigation	Product(s)
Omaha Printing Company	4700 F St., Omaha, NE 68117	8/22/2013	The firm manufactures commercial printed products.
Military Truck Parts, Inc	37910 HWY. 191, Many, LA 71449	8/30/2013	The firm is a manufacturer of specialty vehicles such as military transport and civilian first responder utility vehicles.
Nedza International Inc. (dba The Greenbriar).	4240 Colham Ferry Road, Watkinsville, GA 30677.	8/30/2013	The firm manufactures hi-fire functional stoneware.

Any party having a substantial interest in these proceedings may request a public hearing on the matter. A written request for a hearing must be submitted to the Trade Adjustment Assistance for Firms Division, Room 71030, Economic Development Administration, U.S. Department of Commerce, Washington, DC 20230, no later than ten (10) calendar days following publication of this notice.

Please follow the requirements set forth in EDA's regulations at 13 CFR 315.9 for procedures to request a public hearing. The Catalog of Federal Domestic Assistance official number and title for the program under which these petitions are submitted is 11.313, Trade Adjustment Assistance for Firms.

Dated: September 3, 2013.

Michael DeVillo,

Eligibility Examiner.

[FR Doc. 2013–21837 Filed 9–6–13; 8:45 am]

BILLING CODE 3510–WH–P

DEPARTMENT OF COMMERCE

Foreign-Trade Zones Board

[Order No. 1913]

Approval for Manufacturing (Production) Authority; Foreign-Trade Zone 141; Firth Rixson, Inc. d/b/a Firth Rixson Monroe (Aircraft Turbine Components); Rochester, New York

Pursuant to its authority under the Foreign-Trade Zones Act of June 18, 1934, as amended (19 U.S.C. 81a–81u), the Foreign-Trade Zones Board (the Board) adopts the following Order:

Whereas, Monroe County, New York, grantee of Foreign-Trade Zone 141, has requested manufacturing (production) authority on behalf of Firth Rixson, Inc. d/b/a Firth Rixson Monroe (Firth Rixson), within FTZ 141 in Rochester, New York (FTZ Docket 30–2011, filed 4–29–2011);

Whereas, notice inviting public comment has been given in the **Federal Register** (76 FR 25300–25301, 5–4–2011; 77 FR 43572–43573, 7–25–2012; 78 FR 2658, 1–14–2013; 78 FR 9033, 2–7–2013) and the application has been processed pursuant to the FTZ Act and the Board's regulations; and,

Whereas, the Board adopts the findings and recommendations of the examiner's report, and finds that the requirements of the FTZ Act and the Board's regulations would be satisfied, and that the proposal would be in the public interest if approval were subject to restriction;

Now, therefore, the Board hereby orders:

The application for manufacturing (production) authority under zone procedures within FTZ 141 on behalf of Firth Rixson, as described in the application and **Federal Register** notice, is approved, subject to the FTZ Act and the Board's regulations, including Section 400.13, and further subject to a restriction requiring that Firth Rixson admit all foreign-status titanium products to the zone under privileged foreign status (19 CFR 146.41).

Signed at Washington, DC, this 29th day of August 2013.

Paul Piquado,

Assistant Secretary of Commerce for Import Administration, Alternate Chairman, Foreign-Trade Zones Board.

Attest:

Andrew McGilvray,

Executive Secretary.

[FR Doc. 2013–21904 Filed 9–6–13; 8:45 am]

BILLING CODE 3510–DS–P

DEPARTMENT OF COMMERCE

Foreign-Trade Zones Board

[B–47–2013]

Authorization of Production Activity, Foreign-Trade Subzone 123E, Vestas Nacelles America, Inc., (Wind Turbines), Brighton, Denver, Pueblo, and Windsor, Colorado

On May 3, 2013, Vestas Nacelles America, Inc., operator of Subzone 123E in Brighton, Denver, Pueblo, and Windsor, Colorado, submitted a notification of proposed production activity to the Foreign-Trade Zones (FTZ) Board.

The notification was processed in accordance with the regulations of the FTZ Board (15 CFR part 400), including notice in the **Federal Register** inviting public comment (78 FR 31517, 5–24–2013). The FTZ Board has determined that no further review of the activity is warranted at this time. The production activity described in the notification is authorized, subject to the FTZ Act and the Board's regulations, including Section 400.14.

Dated: September 3, 2013.

Andrew McGilvray,

Executive Secretary.

[FR Doc. 2013–21897 Filed 9–6–13; 8:45 am]

BILLING CODE 3510–DS–P

DEPARTMENT OF COMMERCE

Foreign-Trade Zones Board

[B–42–2013]

Foreign-Trade Zone 134—Chattanooga, Tennessee; Authorization of Production Activity; Komatsu America Corporation, (Construction and Forestry Equipment), Chattanooga, Tennessee

On May 6, 2013, the Chattanooga Chamber Foundation, grantee of FTZ 134, submitted a notification of proposed production activity to the Foreign-Trade Zones (FTZ) Board on behalf of Komatsu America Corporation, within FTZ 134-Site 14, in Chattanooga, Tennessee.

The notification was processed in accordance with the regulations of the FTZ Board (15 CFR part 400) including notice in the **Federal Register** inviting public comment (78 FR 28190, 05–14–2013). The FTZ Board has determined that no further review of the activity is warranted at this time. The production activity described in the notification is authorized, subject to the FTZ Act and the Board's regulations, including Section 400.14.

Dated: September 3, 2013.

Andrew McGilvray,

Executive Secretary.

[FR Doc. 2013–21899 Filed 9–6–13; 8:45 am]

BILLING CODE 3510–DS–P

DEPARTMENT OF COMMERCE

Foreign-Trade Zones Board

[B–45–2013]

Subzone 29J, Authorization of Production Activity, LLFlex, LLC; (Foil Backed Paperboard), Louisville, Kentucky

On May 6, 2013, LLFlex, LLC submitted a notification of proposed production activity to the Foreign-Trade Zones (FTZ) Board for its facility within Subzone 29J, in Louisville, Kentucky.

The notification was processed in accordance with the regulations of the FTZ Board (15 CFR part 400), including notice in the **Federal Register** inviting public comment (78 FR 28577–28578, 5–15–2013). The FTZ Board has determined that no further review of the activity is warranted at this time. The production activity described in the notification is authorized, subject to the FTZ Act and the Board's regulations, including Section 400.14.

Dated: September 3, 2013.

Andrew McGilvray,

Executive Secretary.

[FR Doc. 2013–21898 Filed 9–6–13; 8:45 am]

BILLING CODE 3510–DS–P

DEPARTMENT OF COMMERCE

Foreign-Trade Zones Board

[Order No. 1914]

Authority To Manufacture Carbon Fiber for the U.S. Market Not Approved; Foreign-Trade Subzone 148C; Toho Tenax America, Inc.; Rockwood, Tennessee

Pursuant to its authority under the Foreign-Trade Zones Act of June 18, 1934, as amended (19 U.S.C. 81a–81u), the Foreign-Trade Zones Board (the Board) adopts the following Order:

Whereas, the Industrial Development Board of Blount County, grantee of Foreign-Trade Zone 148, has requested authority on behalf of Toho Tenax America, Inc. (TTA), to manufacture carbon fiber under zone procedures for the U.S. market within Subzone 148C at the TTA facility in Rockwood, Tennessee, (FTZ Docket 57–2010, filed September 29, 2010);

Whereas, notice inviting public comment has been given in the **Federal Register** (75 FR 61696, 10/6/2010; 75 FR 74002, 11/30/2010; 77 FR 73978, 12/12/2012; and 77 FR 75972, 12/26/2012) and the application has been processed pursuant to the FTZ Act and the Board's regulations; and,

Whereas, the Board adopts the findings and recommendations of the examiner's report, and finds that the requirements of the FTZ Act and the Board's regulations have not been satisfied;

Now, therefore, the Board hereby does not approve the application requesting authority to manufacture carbon fiber for the U.S. market under zone procedures within Subzone 148C at the TTA facility located in Rockwood, Tennessee.

Signed at Washington, DC, this 29th day of August 2013.

Paul Piquado,

Assistant Secretary of Commerce, Alternate Chairman, Foreign-Trade Zones Board.

Attest:

Andrew McGilvray,

Executive Secretary.

[FR Doc. 2013–21900 Filed 9–6–13; 8:45 am]

BILLING CODE 3510–DS–P

DEPARTMENT OF COMMERCE

International Trade Administration

[A–580–816]

Corrosion-Resistant Carbon Steel Flat Products from the Republic of Korea: Preliminary Results of Antidumping Duty Administrative Review; 2011–2012

AGENCY: Import Administration, International Trade Administration, Department of Commerce.

SUMMARY: In response to requests from interested parties, the Department of Commerce (the Department) is conducting an administrative review of the antidumping duty order on corrosion-resistant carbon steel flat products (CORE) from the Republic of Korea (Korea), covering the period

August 1, 2011, through February 14, 2012.[1] [2] The review covers two mandatory respondents, Dongbu Steel Co., Ltd., (Dongbu), and Hyundai HYSCO (HYSCO), and five non-selected companies.[3] We preliminarily determine that Dongbu sold subject merchandise at less than normal value (NV) during the POR. We preliminarily determine that HYSCO did not sell subject merchandise at less than NV during the POR.

DATES: *Effective Date:* September 9, 2013.

FOR FURTHER INFORMATION CONTACT: Stephanie Moore (Dongbu) or Christopher Hargett (HYSCO), AD/CVD Operations, Office 8, Import Administration, International Trade Administration, U.S. Department of Commerce, 14th Street and Constitution Avenue NW., Washington, DC 20230; telephone: (202) 482–3692 or (202) 482–4161, respectively.

SUPPLEMENTARY INFORMATION:

Scope of the Order

Imports covered by the order are shipments of flat-rolled carbon steel products. The merchandise subject to review is currently classifiable under items 7210.30.0030, 7210.30.0060, 7210.41.0000, 7210.49.0030, 7210.49.0090, 7210.49.0091, 7210.49.0095, 7210.61.0000, 7210.69.0000, 7210.70.6030, 7210.70.6060, 7210.70.6090, 7210.90.1000, 7210.90.6000, 7210.90.9000, 7212.20.0000, 7212.30.1030, 7212.30.1090, 7212.30.3000, 7212.30.5000, 7212.40.1000, 7212.40.5000, 7212.50.0000, 7212.60.0000, 7215.90.1000, 7215.90.3000, 7215.90.5000, 7217.20.1500, 7217.30.1530, 7217.30.1560, 7217.90.1000, 7217.90.5030, 7217.90.5060, and 7217.90.5090 of the Harmonized Tariff Schedule of the United States (HTSUS). Although the HTSUS subheadings are provided for convenience and customs purposes, the written description of the merchandise subject to the order is dispositive. For a full description of the scope of the order, *see* the ''Decision Memorandum for the Preliminary Results of Antidumping Duty Administrative Review: Corrosion-Resistant Carbon Steel Flat Products from the Republic of Korea'' from Gary Taverman, Senior Advisor for Antidumping and Countervailing Duty Operations, to Paul Piquado, Assistant Secretary for Import Administration, (Preliminary Decision Memorandum) dated concurrently with these results and hereby adopted by this notice.

The Preliminary Decision Memorandum is a public document and is on file electronically via Import Administration's Antidumping and Countervailing Duty Centralized Electronic Service System (IA ACCESS). IA ACCESS is available to registered users at *http://iaaccess.trade.gov,* and it is available to all parties in the Central Records Unit, room 7046 of the main Department of Commerce building. In addition, a complete version of the Preliminary Decision Memorandum can be accessed directly on the Internet at *http://www.trade.gov/ia/.* The signed Preliminary Decision Memorandum and the electronic versions of the Preliminary Decision Memorandum are identical in content.

Methodology

The Department has conducted this review in accordance with section 751(a)(2) of the Tariff Act of 1930, as amended (the Act). Constructed export price (CEP) is calculated in accordance with section 772 of the Act. NV is calculated in accordance with section 773 of the Act. For a full description of the methodology underlying our conclusions, *see* Preliminary Decision Memorandum.

Preliminary Results of the Review

As a result of this review, we preliminarily determine the following weighted-average dumping margins[4] for the period August 1, 2011, through February 14, 2012:

Producer and/or exporter	Weighted-average dumping margin (percent)
Dongbu Steel Co., Ltd	7.64
Hyundai HYSCO	0.00
Dongkuk Industries Co., Ltd	7.64
Haewon MSC Co. Ltd	7.64
LG Chem., Ltd	7.64
LG Hausys, Ltd	7.64
Union Steel Manufacturing Co., Ltd	7.64

Disclosure and Public Comment

The Department will disclose to parties to this proceeding the calculations performed in reaching the preliminary results within five days of the date of publication of these preliminary results.[5] Interested parties may submit written comments (case briefs) within 30 days of publication of the preliminary results and rebuttal comments (rebuttal briefs) within five days after the time limit for filing case briefs.[6] Rebuttal briefs must be limited to issues raised in the case briefs.[7] Parties who submit arguments are requested to submit with the argument: (1) A statement of the issue; (2) a brief summary of the argument; and (3) a table of authorities.[8] All case and rebuttal briefs must be filed electronically using IA ACCESS, and must also be served on interested parties.[9] An electronically filed document must be received successfully in its entirety by the Department's electronic records system, IA ACCESS, by 5:00 p.m. Eastern Standard Time within 30 days after the date of publication of this notice. Executive summaries should be limited to five pages total, including footnotes.

Within 30 days of the date of publication of this notice, interested parties who wish to request a hearing, or to participate if one is requested, must submit a written request to the Assistant Secretary for Import Administration, U.S. Department of Commerce, using Import Administration's IA ACCESS system.[10] Requests should contain the party's name, address, and telephone number, the number of participants, and a list of the issues to be discussed. If a request

[1] *See Initiation of Antidumping and Countervailing Duty Administrative Reviews and Requests for Revocation in Part,* 77 FR 59168 (September 26, 2012).

[2] The period of review (POR) ends on February 14, 2012 because the antidumping duty order on CORE from Korea was revoked effective this date. *See Corrosion-Resistant Carbon Steel Flat Products from Germany and the Republic of Korea: Revocation of Antidumping and Countervailing Duty Orders,* 78 FR 16832 (March 19, 2013) (*CORE Revocation*).

[3] The non-selected companies are: Dongkuk Industries Co., Ltd. (Dongkuk), Haewon MSC Co. Ltd. (Haewon), LG Chem., Ltd. (LG Chem), LG Hausys, Ltd. (Hausys), and Union Steel Manufacturing Co., Ltd. (Union); *see also* Memorandum to Melissa G. Skinner, Director, Office 3, AD/CVD Operations through Eric Greynolds, Program Manager, Office 3, AD/CVD Operations from Christopher Hargett, Senior International Trade Compliance Analyst, Office 3, AD/CVD Operations, titled ''Selection of Respondents for Individual Review,'' dated November 19, 2012.

[4] Because there was only one margin that was not zero or *de minimis,* we preliminarily are using this margin (Dongbu's) as the rate for the non-selected companies. Due to the revocation of this antidumping duty order effective February 14, 2012, the weighted-average margins listed in the rate chart will only be used to calculate the liquidation rate for the five non-selected companies in the instant review. If the final results of this review are unchanged from the *Preliminary Results,* the Department will liquidate entries for Dongbu based on the business proprietary assessment rates which the Department calculates for Dongbu in the instant review.

[5] *See* 19 CFR 351.224(b).

[6] *See* 19 CFR 351.309(c)(1)(ii) and 351.309(d)(1).

[7] *See* 19 CFR 351.309(d)(2).

[8] *See* 19 CFR 351.309(c)(2) and (d)(2).

[9] *See* 19 CFR 351.303(f).

[10] *See* 19 CFR 351.310(c).

for a hearing is made, we will inform parties of the scheduled date for the hearing which will be held at the U.S. Department of Commerce, 14th Street and Constitution Avenue NW., Washington, DC 20230, at a time and location to be determined.[11] Parties should confirm by telephone the date, time, and location of the hearing. Issues raised in the hearing will be limited to those raised in the respective case briefs.

Unless the deadline is extended pursuant to section 751(a)(3)(A) of the Act, the Department will issue the final results of this administrative review, including the results of our analysis of the issues raised by the parties in their comments, within 120 days of publication of these preliminary results.

Assessment Rates

Upon issuance of the final results, the Department shall determine, and U.S. Customs and Border Protection (CBP) shall assess, antidumping duties on all appropriate entries covered by this review.[12] If the weighted-average dumping margin for Dongbu or HYSCO is not zero or *de minimis* (*i.e.,* less than 0.5 percent), we will calculate importer-specific *ad valorem* antidumping duty assessment rates based on the ratio of the total amount of dumping calculated for the importer's examined sales to the total entered value of those same sales in accordance with 19 CFR 351.212(b)(1).[13] We will instruct CBP to assess antidumping duties on all appropriate entries covered by this review when the importer-specific assessment rate calculated in the final results of this review is not zero or *de minimis.* Where either the respondent's weighted-average dumping margin is zero or *de minimis,* or an importer-specific assessment rate is zero or *de minimis,* we will instruct CBP to liquidate the appropriate entries without regard to antidumping duties.[14] The final results of this review shall be the basis for the assessment of antidumping duties on entries of merchandise covered by the final results of this review where applicable.

The Department clarified its ''automatic assessment'' regulation on May 6, 2003. This clarification will apply to entries of subject merchandise during the POR produced by each respondent for which they did not know that their merchandise was destined for the United States. In such instances, we will instruct CBP to liquidate unreviewed entries at the all-others rate if there is no rate for the intermediate company(ies) involved in the transaction. For a full discussion of this clarification, *see Antidumping and Countervailing Duty Proceedings: Assessment of Antidumping Duties,* 68 FR 23954 (May 6, 2003).

We intend to issue instructions to CBP 15 days after publication of the final results of this review.

Cash Deposit Requirements

The Department notified CBP to discontinue the collection of cash deposits on entries of the subject merchandise, entered or withdrawn from warehouse, on or after February 14, 2012.[15]

Notifications

This notice serves as a preliminary reminder to importers of their responsibility under 19 CFR 351.402(f)(2) to file a certificate regarding the reimbursement of antidumping duties prior to liquidation of the relevant entries during this review period. Failure to comply with this requirement could result in the Secretary's presumption that reimbursement of antidumping duties occurred and the subsequent assessment of double antidumping duties.

These preliminary results of review are issued and published in accordance with sections 751(a)(1) and 777(i)(1) of the Act.

Dated: August 30, 2013.

Paul Piquado,

Assistant Secretary for Import Administration.

Appendix—*List of Topics Discussed in the Preliminary Decision Memorandum*

1. Background
2. Period of Review
3. Scope of the Order
4. Discussion of Methodology

[FR Doc. 2013–21890 Filed 9–6–13; 8:45 am]

BILLING CODE 3510–DS–P

[11] *See* 19 CFR 351.310.

[12] *See* 19 CFR 351.212(b)(1).

[13] In these preliminary results, the Department applied the weighted-average dumping margin calculation method adopted in *Antidumping Proceedings: Calculation of the Weighted-Average Dumping Margin and Assessment Rate in Certain Antidumping Duty Proceedings; Final Modification,* 77 FR 8101 (February 14, 2012).

[14] *See* 19 CFR 351.106(c)(2).

[15] *See CORE Revocation,* 78 FR 16832.

DEPARTMENT OF COMMERCE

International Trade Administration

[C–570–978]

High Pressure Steel Cylinders from the People's Republic of China: Rescission of Countervailing Duty Administrative Review; 2011–2012

AGENCY: Import Administration, International Trade Administration, Department of Commerce.

SUMMARY: The Department of Commerce (Department) is rescinding the administrative review of the countervailing duty order on high pressure steel cylinders (cylinders) from the People's Republic of China (PRC) for the period October 18, 2011, through December 31, 2012.

DATES: *Effective Date:* September 9, 2013.

FOR FURTHER INFORMATION CONTACT: Joseph Shuler, AD/CVD Operations, Office 1, Import Administration, U.S. Department of Commerce, 14th Street and Constitution Avenue NW., Washington, DC 20230; telephone: (202) 482–1293.

SUPPLEMENTARY INFORMATION:

Background

On August 1, 2013, the Department initiated an administrative review of the countervailing duty order on cylinders from the PRC for the period October 18, 2011, through December 31, 2012,[1] based on a request by Beijing Tianhai Industry Co., Ltd. (BTIC) for a review of itself.[2] BTIC withdrew its request for an administrative review on August 23, 2013, and no other party requested a review of BTIC.[3]

Rescission of Review

Pursuant to 19 CFR 351.213(d)(1), the Department will rescind an administrative review, in whole or in part, if the party that requested the review withdraws its request within 90 days of the publication of the notice of initiation of the requested review. In this case, BTIC withdrew its request within the 90-day deadline, and no other parties requested an administrative review of the

[1] *See Initiation of Antidumping and Countervailing Duty Administrative Reviews and Request for Revocation in Part,* 78 FR 46566, 46568 (August 1, 2013).

[2] *See* BTIC's July 1, 2013 letter, ''Request for the First Administrative Review of the Countervailing Duty Order on High Pressure Steel Cylinders from the People's Republic of China.''

[3] *See* BTIC's August 23, 2013 letter, ''Withdrawal of Review Request in the Administrative Review of Countervailing Duty Order on High Pressure Steel Cylinders from the People's Republic of China.''

countervailing duty order. Therefore, we are rescinding the administrative review of cylinders from the PRC covering the period October 18, 2011, through December 31, 2012, in its entirety, in accordance with 19 CFR 351.213(d)(1).

Assessment

The Department will instruct U.S. Customs and Border Protection (CBP) to assess countervailing duties on all entries of cylinders from the PRC. Countervailing duties shall be assessed at rates equal to the cash deposit of estimated countervailing duties required at the time of entry, or withdrawal from warehouse, for consumption, in accordance with 19 CFR 351.212(c)(1)(i). The Department intends to issue appropriate assessment instructions to CBP 15 days after the date of publication of this notice in the **Federal Register**, if appropriate.

Notifications

This notice also serves as a final reminder to parties subject to administrative protective order (APO) of their responsibility concerning the return or destruction of proprietary information disclosed under APO in accordance with 19 CFR 351.305(a)(3). Timely written notification of the return/destruction of APO materials or conversion to judicial protective order is hereby requested. Failure to comply with the regulations and terms of an APO is a violation that is subject to sanction.

This notice is issued and published in accordance with sections 751(a)(1) and 777(i)(1) of the Tariff Act of 1930, as amended, and 19 CFR 351.213(d)(4).

Dated: September 3, 2013.

Gary Taverman,

Senior Advisor for Antidumping and Countervailing Duty Operations.

[FR Doc. 2013–21894 Filed 9–6–13; 8:45 am]

BILLING CODE 3510–DS–P

DEPARTMENT OF COMMERCE

National Oceanic and Atmospheric Administration

Proposed Information Collection; Comment Request; Expanded Vessel Monitoring System Requirement in the Pacific Coast Groundfish Fishery

AGENCY: National Oceanic and Atmospheric Administration, Commerce.

ACTION: Notice.

SUMMARY: The Department of Commerce, as part of its continuing effort to reduce paperwork and respondent burden, invites the general public and other Federal agencies to take this opportunity to comment on proposed and/or continuing information collections, as required by the Paperwork Reduction Act of 1995.

DATES: Written comments must be submitted on or before November 8, 2013.

ADDRESSES: Direct all written comments to Jennifer Jessup, Departmental Paperwork Clearance Officer, Department of Commerce, Room 6616, 14th and Constitution Avenue NW., Washington, DC 20230 (or via the Internet at *JJessup@doc.gov*).

FOR FURTHER INFORMATION CONTACT: Requests for additional information or copies of the information collection instrument and instructions should be directed to Becky Renko, (206) 526–6110 or *Becky.Renko@noaa.gov.*

SUPPLEMENTARY INFORMATION:

I. Abstract

This request is for extension of a currently approved information collection.

NOAA has established large-scale depth-based management areas, referred to as Groundfish Conservation Areas (GCAs), where groundfish fishing is prohibited or restricted. These areas were specifically designed to reduce the catch of species while allowing healthy fisheries to continue in areas and with gears where little incidental catch of overfished species is likely to occur. Because NOAA needs methods to effectively enforce area restrictions, certain commercial fishing vessels are required to install and use a vessel monitoring system (VMS) that automatically sends hourly position reports. Exemptions from the reporting requirement are available for inactive vessels or vessels fishing outside the monitored area. The vessels are also required to declare what gear will be used.

To ensure the integrity of the GCAs and Rockfish Conservation Areas (RCA), a pilot VMS program was implemented on January 1, 2004. The pilot program required vessels registered to Pacific Coast groundfish fishery limited entry permits to carry and use VMS transceiver units while fishing off the coasts of Washington, Oregon and California. On January 1, 2007, the VMS program coverage was expanded on to include all open access fisheries in addition to the limited entry fisheries.

II. Method of Collection

The installation/activation reports are available over the Internet. Due to the need for the owner's signature, installation reports must be faxed or mailed to NMFS. Hourly position reports are automatically sent from VMS transceivers installed aboard vessels. Exemption reports and declaration reports are submitted via a toll-free telephone number.

III. Data

OMB Control Number: 0648–0573.

Form Number: None.

Type of Review: Regular submission (extension of a currently approved collection).

Affected Public: Business or other for-profits organizations; individuals or households.

Estimated Number of Respondents: 1,000.

Estimated Time per Response: VMS installation: 4 hours; VMS maintenance: 4 hours; installation, exemption and activation reports: 5 minutes each; and declaration reports: 4 minutes.

Estimated Total Annual Burden Hours: 5,800.

Estimated Total Annual Cost to Public: $1,933,250.

IV. Request for Comments

Comments are invited on: (a) Whether the proposed collection of information is necessary for the proper performance of the functions of the agency, including whether the information shall have practical utility; (b) the accuracy of the agency's estimate of the burden (including hours and cost) of the proposed collection of information; (c) ways to enhance the quality, utility, and clarity of the information to be collected; and (d) ways to minimize the burden of the collection of information on respondents, including through the use of automated collection techniques or other forms of information technology.

Comments submitted in response to this notice will be summarized and/or included in the request for OMB approval of this information collection; they also will become a matter of public record.

Dated: September 3, 2013.

Gwellnar Banks,

Management Analyst, Office of the Chief Information Officer.

[FR Doc. 2013–21800 Filed 9–6–13; 8:45 am]

BILLING CODE 3510–22–P

DEPARTMENT OF COMMERCE

National Oceanic and Atmospheric Administration

Proposed Information Collection; Comment Request; Applications and Reports for Registration as a Tanner or Agent

AGENCY: National Oceanic and Atmospheric Administration, Commerce.

ACTION: Notice.

SUMMARY: The Department of Commerce, as part of its continuing effort to reduce paperwork and respondent burden, invites the general public and other Federal agencies to take this opportunity to comment on proposed and/or continuing information collections, as required by the Paperwork Reduction Act of 1995.

DATES: Written comments must be submitted on or before November 8, 2013.

ADDRESSES: Direct all written comments to Jennifer Jessup, Departmental Paperwork Clearance Officer, Department of Commerce, Room 6616, 14th and Constitution Avenue NW., Washington, DC 20230 (or via the Internet at *JJessup@doc.gov*).

FOR FURTHER INFORMATION CONTACT: Requests for additional information or copies of the information collection instrument and instructions should be directed to Les Cockreham, (907) 271–3021 or *les.cockreham@noaa.gov.*

SUPPLEMENTARY INFORMATION:

I. Abstract

The Marine Mammal Protection Act exempts Alaskan natives from the prohibitions on taking, killing, or injuring marine mammals if the taking is done for subsistence or for creating and selling authentic native articles of handicraft or clothing. The natives need no permit, but non-natives who wish to act as a tanner or agent for such native products must register with NOAA and maintain and submit certain records. The information is necessary for law enforcement purposes.

II. Method of Collection

Paper documentation is submitted to meet the requirements found at 50 CFR 216.23(c).

III. Data

OMB Control Number: 0648–0179.

Form Number: None.

Type of Review: Regular submission (extension of a current information collection).

Affected Public: Business or other for-profit organizations.

Estimated Number of Respondents: 53.

Estimated Time per Response: 2 hours for an application and 2 hours for a report.

Estimated Total Annual Burden Hours: 106.

Estimated Total Annual Cost to Public: $53.

IV. Request for Comments

Comments are invited on: (a) Whether the proposed collection of information is necessary for the proper performance of the functions of the agency, including whether the information shall have practical utility; (b) the accuracy of the agency's estimate of the burden (including hours and cost) of the proposed collection of information; (c) ways to enhance the quality, utility, and clarity of the information to be collected; and (d) ways to minimize the burden of the collection of information on respondents, including through the use of automated collection techniques or other forms of information technology.

Comments submitted in response to this notice will be summarized and/or included in the request for OMB approval of this information collection; they also will become a matter of public record.

Dated: September 3, 2013.

Gwellnar Banks,

Management Analyst, Office of the Chief Information Officer.

[FR Doc. 2013–21799 Filed 9–6–13; 8:45 am]

BILLING CODE 3510–22–P

DEPARTMENT OF COMMERCE

National Oceanic and Atmospheric Administration

RIN 0648–XC860

North Pacific Fishery Management Council; Public Meetings

AGENCY: National Marine Fisheries Service (NMFS), National Oceanic and Atmospheric Administration (NOAA), Commerce.

ACTION: Notice of public meetings.

SUMMARY: The North Pacific Fishery Management Council (Council) and its advisory committees will hold public meetings in Anchorage, AK.

DATES: The meetings will be held September 30, 2013 through October 10, 2013. See **SUPPLEMENTARY INFORMATION** for specific dates and times. The Council will begin its plenary session at 8 a.m. on Wednesday, October 2, continuing through Tuesday, October 8, 2013. The Scientific Statistical Committee (SSC) will begin at 8 a.m. on Monday, September 30 and continue through Wednesday, October 2, the Council's Advisory Panel (AP) will begin at 8 a.m. on Tuesday, October 3 and continue through Saturday, October 5. Sablefish Gear Committee, September 30, 10 a.m. at Council office, Room 205. All meetings are open to the public, except executive sessions.

ADDRESSES: The meetings will be held on Hilton Hotel, 500 West 3rd Avenue, Anchorage, AK.

Council address: North Pacific Fishery Management Council, 605 W 4th Avenue, Suite 306, Anchorage, AK 99501–2252.

FOR FURTHER INFORMATION CONTACT: David Witherell, Council staff; telephone: (907) 271–2809.

SUPPLEMENTARY INFORMATION: The Council will begin its plenary session at 8 a.m. on Wednesday, October 2, continuing through Tuesday, October 8, 2013. The Scientific Statistical Committee (SSC) will begin at 8 a.m. on Monday, September 30 and continue through Wednesday, October 2, the Council's Advisory Panel (AP) will begin at 8 a.m. on Tuesday, October 3 and continue through Saturday, October 5. Sablefish Gear Committee, September 30, 10 a.m. at Council office, Room 205. All meetings are open to the public, except executive sessions.

Council Plenary Session: The agenda for the Council's plenary session will include the following issues. The Council may take appropriate action on any of the issues identified.

1. Executive Director's Report

NMFS Management Report (including Update on Limited Access Privilege Program (LAPP) Cost Recovery, Flow Scale analysis/regulations update)

ADF&G Report (including review of Board of Fisheries Statewide Pacific cod proposals)

U.S. Coast Guard Report

U.S. Fish and Wildlife Service Report

Protected Species Report

2. Observer Program: Report from NMFS on information requests; Observer Program 2014 year deployment plan; Receive Observer Advisory Committee report and take action as necessary; Electronic Monitoring (EM).(T)

3. Steller Sea Lion (SSL) Issues: Final action on the SSL Environmental Impact Statement (EIS).

4. Bering Sea Aleutian Island (BSAI) Crab Management: Receive Plan Team report; Final Overfishing Level (OFL)/ Allowable Biological Catch (ABC) specifications for 6 stocks.

5. Groundfish Specifications: Stock Structure Workshop Report; Groundfish Harvest Specifications: Adopt proposed specifications; report on Bering Sea Sablefish Total Allowable Catch (TAC) apportionment.

6. GOA Trawl Issues: Updated discussion paper on GOA Trawl Bycatch Management; Final action on GOA Trawl Data Collection; Initial review of GOA Rockfish Chinook Cap rollover.

7. BSAI Salmon Bycatch: Seashare report on the Salmon Donation Program; Industry Incentive Program Agreements (IPA) report for BSAI chum salmon; Review BSAI Chinook Salmon Report.

8. Miscellaneous Issues: Discussion paper on Aleutian Island Pacific cod processing (T); GOA Gear Committee Report on implementing a sablefish pot fishery.

10. Staff Tasking: Review Committees and tasking; Ecosystem Committee Report on Ecosystem Based Fished Management Workplan.

The Advisory Panel will address most of the same agenda issues as the Council except B reports.

The SSC agenda will include the following issues:

1. BS/AI Crab
2. Groundfish Specifications
3. Observer Program
4. GOA Trawl Issues

In addition to providing ongoing scientific advice for fishery management decisions, the SSC functions as the Councils primary peer review panel for scientific information as described by the Magnuson-Stevens Act section 302(g)(1)(e), and the National Standard 2 guidelines (78 FR 43066). The peer review process is also deemed to satisfy the requirements of the Information Quality Act, including the OMB Peer Review Bulletin guidelines. The Agenda is subject to change, and the latest version will be posted at *http://www.alaskafisheries.noaa.gov/npfmc/*. Background documents, reports, and analyses for review are posted on the Council Web site in advance of the meeting. The names and organizational affiliations of SSC members are also posted on the Web site.

Although non-emergency issues not contained in this agenda may come before this group for discussion, those issues may not be the subject of formal action during these meetings. Action will be restricted to those issues specifically listed in this notice and any issues arising after publication of this notice that require emergency action under section 305(c) of the Magnuson-Stevens Fishery Conservation and Management Act, provided the public has been notified of the Council's intent to take final action to address the emergency.

Special Accommodations

These meetings are physically accessible to people with disabilities. Requests for sign language interpretation or other auxiliary aids should be directed to Gail Bendixen at (907) 271–2809 at least 7 working days prior to the meeting date.

Dated: September 4, 2013.

Tracey L. Thompson,

Acting Deputy Director, Office of Sustainable Fisheries, National Marine Fisheries Service.

[FR Doc. 2013–21884 Filed 9–6–13; 8:45 am]

BILLING CODE 3510–22–P

DEPARTMENT OF COMMERCE

National Oceanic and Atmospheric Administration

RIN 0648–XC858

Western Pacific Fishery Management Council; Public Meetings

AGENCY: National Marine Fisheries Service (NMFS), National Oceanic and Atmospheric Administration (NOAA), Commerce.

ACTION: Notice of public meetings.

SUMMARY: The Western Pacific Fishery Management Council (Council) will hold a meeting of its Non-Commercial Fisheries Advisory Committee which may make recommendations on fishery management issues in the Western Pacific Region.

DATES: The Non-Commercial Fisheries Advisory Committee Meeting will be held on September 25–26, 2013. For specific times and agendas, see **SUPPLEMENTARY INFORMATION**.

ADDRESSES: The Non-Commercial Fisheries Advisory Committee will meet at the Council Office, 1164 Bishop St., Suite 1400, Honolulu, HI 96813, telephone: (808) 522–8220; and by teleconference (1–888–482–3560, Access Code: 5228220).

FOR FURTHER INFORMATION CONTACT: Kitty M. Simonds, Executive Director; telephone: (808) 522–8220.

SUPPLEMENTARY INFORMATION: In addition to the agenda items listed here, the Non-Commercial Fisheries Advisory Committee may receive reports and make recommendations on emerging fishery issues in the Western Pacific Region. A public comment period will be provided in the agenda. The order in which agenda items are addressed may change. The meetings will run as late as necessary to complete scheduled business.

Schedule and Agenda for Non-Commercial Fisheries Advisory Committee Meeting:

Wednesday, September 25, 2013, 8:30 a.m.–5 p.m.

1. Welcome and Introductions
2. Non-commercial fishery agencies in the Western Pacific
   a. National Marine Fisheries Service (NMFS)
   b. Western Pacific resource agencies
   c. Western Pacific Regional Fishery Management Council
3. About the Non-Commercial Fisheries Advisory Committee
4. Non-commercial fisheries in the Western Pacific
   a. Historical overview
   b. Recreational fishing today
5. Data collection initiatives for non-commercial fishing
   a. Hawaii Marine Recreational Fisheries Survey
   b. Western Pacific creel surveys
   c. Marine Recreational Information Program (MRIP)
      i. Overview of MRIP
      ii. MRIP in the Western Pacific
6. NMFS Initiatives for non-commercial fishing
7. Current issues facing non-commercial fishing in the Western Pacific
   a. Pelagic Issues
   b. Protected species
   c. Definitions
   d. Annual Catch Limits
   e. Other issues
      i. Area Restrictions
      ii. Climate Change
      iii. Coastal Marine Spatial Planning
      iv. Essential Fish Habitat
      v. Traditional/Indigenous Fishing
8. Round-table discussion on non-commercial fishing issues
9. Public Comment
10. Discussion and Recommendations from Day 1

Thursday, September 26, 2013, 8:30 a.m.–12 noon

11. Non-Commercial Fisheries Program and Priorities
12. Non-Commercial Fisheries Issues and Challenges
13. Redeveloping the Council Non-commercial Fisheries Program
14. Next steps
15. Other Business
16. Public Comment
17. Discussion and Recommendations from Day 2

Although non-emergency issues not contained in this agenda may come before this group for discussion, those issues may not be the subject of formal action during these meetings. Action will be restricted to those issues

specifically listed in this notice and any issues arising after publication of this notice that require emergency action under section 305(c) of the Magnuson-Stevens Fishery Conservation and Management Act, provided the public has been notified of the Council's intent to take final action to address the emergency.

Special Accommodations

These meetings are physically accessible to people with disabilities. Requests for sign language interpretation or other auxiliary aids should be directed to Kitty M. Simonds, (808) 522–8220 (voice) or (808) 522–8226 (fax), at least 5 days prior to the meeting date.

Authority: 16 U.S.C 1801 *et seq.*

Dated: September 4, 2013.

Tracey L. Thompson,

Acting Deputy Director, Office of Sustainable Fisheries, National Marine Fisheries Service.

[FR Doc. 2013–21874 Filed 9–6–13; 8:45 am]

BILLING CODE 3510–22–P

DEPARTMENT OF COMMERCE

National Oceanic and Atmospheric Administration

U.S. Integrated Ocean Observing System (IOOS®) Advisory Committee

AGENCY: National Ocean Service, National Oceanic and Atmospheric Administration (NOAA), Department of Commerce.

ACTION: Notice of open meeting (via webinar and teleconference).

SUMMARY: Notice is hereby given of a virtual meeting of the U.S. Integrated Ocean Observing System (IOOS®) Advisory Committee (Committee).

Dates and Times: The public meeting will be held on Tuesday September 24, 2013, from 10:00 a.m. to 2:30 p.m. EDT. These times and the agenda topics described below are subject to change. Refer to the Web page listed below for the most up-to-date meeting agenda.

FOR FURTHER INFORMATION CONTACT: Jessica Snowden, Alternate Designated Federal Official, U.S. IOOS Advisory Committee, U.S. IOOS Program, 1100 Wayne Ave., Suite 1225, Silver Spring, MD 20910; Phone 301–427–2453; Fax 301–427–2073; Email *Jessica.snowden@noaa.gov* or visit the U.S. IOOS Advisory Committee Web site at *http://www.ioos.noaa.gov/advisorycommittee.*

SUPPLEMENTARY INFORMATION: The IOOS Advisory Committee meeting will be held via webinar and teleconference. Members of the public who wish to participate in the meeting must register in advance by September 18, 2013. Please register by contacting Jessica Snowden, Alternate Designated Federal Official at email: *Jessica.snowden@noaa.gov* or tel (301) 427–2453. Webinar and teleconference information will be provided to registrants prior to the meeting. While the meeting will be open to the public, webinar and teleconference capacity may be limited.

The Committee was established by the NOAA Administrator as directed by Section 12304 of the Integrated Coastal and Ocean Observation System Act, part of the Omnibus Public Land Management Act of 2009 (Public Law 111–11). The Committee advises the NOAA Administrator and the Interagency Ocean Observation Committee (IOOC) on matters related to the responsibilities and authorities set forth in section 12302 of the Integrated Coastal and Ocean Observation System Act of 2009 and other appropriate matters as the Under Secretary refers to the Committee for review and advice.

The Committee will provide advice on:

(a) administration, operation, management, and maintenance of the System;

(b) expansion and periodic modernization and upgrade of technology components of the System;

(c) identification of end-user communities, their needs for information provided by the System, and the System's effectiveness in dissemination information to end-user communities and to the general public; and

(d) any other purpose identified by the Under Secretary of Commerce for Oceans and Atmosphere or the Interagency Ocean Observation Committee.

The meeting will be open to public participation with a 15-minute public comment period on September 24, 2013, from 2:15 p.m. to 2:30 p.m. (check agenda on Web site to confirm time.) The Committee expects that public statements presented at its meetings will not be repetitive of previously submitted verbal or written statements. In general, each individual or group making a verbal presentation will be limited to a total time of three (3) minutes. Written comments should be received by the Designated Federal Official by September 16, 2013 to provide sufficient time for Committee review. Written comments received after September 16, 2013, will be distributed to the Committee, but may not be reviewed prior to the meeting date.

Matters To Be Considered: The meeting will focus on discussing various business investment models for consideration by U.S. IOOS. The agenda is subject to change. The latest version will be posted at *http://www.ioos.noaa.gov/advisorycommittee.*

Dated: August 30, 2013.

Christopher C. Cartwright,

Associate Assistant Administrator for Management and CFO/CAO, National Ocean Service, National Oceanic and Atmospheric Administration.

[FR Doc. 2013–21805 Filed 9–6–13; 8:45 am]

BILLING CODE 3510–22–P

DEPARTMENT OF COMMERCE

National Oceanic and Atmospheric Administration

RIN 0648–XC857

Mid-Atlantic Fishery Management Council (MAFMC); Public Meeting

AGENCY: National Marine Fisheries Service (NMFS), National Oceanic and Atmospheric Administration (NOAA), Commerce.

ACTION: Notice of public meeting.

SUMMARY: The Spiny Dogfish Monitoring Committee of the Mid-Atlantic Fishery Management Council (Council) will hold a meeting.

DATES: The Monitoring Committee will meet Monday, September 23, 2013 beginning at 10 a.m. and conclude by 3 p.m.

ADDRESSES: The meeting will be held via webinar with a listening station also available at the Council address below. Webinar link: *http://mafmc.adobeconnect.com/dogfish/*

Council address: Mid-Atlantic Fishery Management Council, 800 N State Street, Suite 201, Dover, DE 19901; telephone: (302) 674–2331.

FOR FURTHER INFORMATION CONTACT: Christopher M. Moore Ph.D., Executive Director, Mid-Atlantic Fishery Management Council, 800 N State Street, Suite 201, Dover, DE 19901; telephone: (302) 526–5255.

SUPPLEMENTARY INFORMATION: The Spiny Dogfish Monitoring Committee will review the annual catch target (ACT) and other management measures that have been established for the 2014 fishing year in light of the recent assessment update and September 17, 2013 review by the Council's Scientific and Statistical Committee.

Special Accommodations:

The meeting is physically accessible to people with disabilities. Requests for

sign language interpretation or other auxiliary aids should be directed to M. Jan Saunders at the Mid-Atlantic Council Office, (302) 526–5251, at least 5 days prior to the meeting date.

Dated: September 4, 2013.

Tracey L. Thompson,

Acting Deputy Director, Office of Sustainable Fisheries, National Marine Fisheries Service.

[FR Doc. 2013–21873 Filed 9–6–13; 8:45 am]

BILLING CODE 3510–22–P

DEPARTMENT OF COMMERCE

National Oceanic and Atmospheric Administration

Solicitation for Members of the NOAA Science Advisory Board (SAB) Gulf Coast Ecosystem Restoration Science Program Advisory Working Group (RSPAWG)

AGENCY: National Oceanic and Atmospheric Administration (NOAA), Office of Oceanic and Atmospheric Research.

ACTION: Notice.

Docket Number: 130823747–3747–01.
RIN: 0648–XC834.

SUMMARY: The National Oceanic and Atmospheric Administration is publishing this notice to solicit nominations for the NOAA Science Advisory Board Gulf Coast Ecosystem Restoration Science Program Advisory Working Group (RSPAWG). The RSPAWG is being formed to provide independent guidance and review of the RESTORE Act Science Program along with general programmatic advice and recommendations. The RSPAWG will also provide a mechanism for formal coordination between the multiple organizations conducting RESTORE-related science within the Gulf of Mexico. Members appointed to the RSPAWG will serve for three-year terms.

DATES: Nominations must be received by October 9, 2013.

ADDRESSES: Nominations should be submitted electronically to *noaa.rspawg.nominees@noaa.gov.*

The Terms of Reference for the RSPAWG is posted at: *http://www.sab.noaa.gov/Working_Groups/standing/docs/2013/RSPAWGTermsOfReference_Final_SABapprovedJul2013.pdf.htm.*

FOR FURTHER INFORMATION CONTACT: Dr. Cynthia Decker, Executive Director, Science Advisory Board, NOAA, Rm. 11230, 1315 East-West Highway, Silver Spring, Maryland 20910. Phone: 301–734–1156, Fax: 301–713–1459, Email: *Cynthia.Decker@noaa.gov.*

SUPPLEMENTARY INFORMATION:

Background

The Under Secretary of Commerce for Oceans and Atmosphere has requested the NOAA Science Advisory Board (SAB) to provide it with timely and expert advice and oversight of the Gulf Coast Ecosystem Restoration Science, Observation, Monitoring and Technology Program, commonly known as the NOAA RESTORE Act Science Program. The SAB is chartered under the Federal Advisory Committee Act and is the only Federal Advisory Committee with the responsibility to advise the Under Secretary on long- and short-range strategies for research, education, and application of science to resource management, and environmental assessment and prediction.

The SAB is forming an external panel that will be known as the Gulf Coast Ecosystem Restoration Science Program Advisory Working Group (RSPAWG). The RSPAWG shall provide independent guidance and review of the RESTORE Act Science Program along with general programmatic advice and recommendations. The RSPAWG will also provide a mechanism for formal coordination between the multiple organizations conducting RESTORE-related science within the Gulf of Mexico. RSPAWG will provide its findings and results to the Science Advisory Board, which will deliberate on the input before forwarding it to NOAA.

The RSPAWG will include approximately twelve Subject Matter Experts from academia, government, industry, and other ocean-related institutions as well as representatives from specific Gulf of Mexico organizations named in the RESTORE Act (i.e., the Gulf States Marine Fisheries Commission, Gulf of Mexico Fishery Management Council, and RESTORE Centers of Excellence in Florida, Alabama, Mississippi, Louisiana, and Texas).

Solicitation of Nominations

This notice solicits nominations to the RSPAWG. NOAA is seeking twelve Subject Matter Experts that have national and international reputations and degrees or professional qualifications in: Physical, chemical, or biological oceanography; economics or social sciences; wetlands ecology; fishery, wildlife, and marine mammal ecology; ecosystem modeling; toxicology; observing and monitoring systems; and ecosystem management. Nominees should be familiar with NOAA's organization and Strategic Plan and have scientific credentials and/or relevant experience that will enable them to provide expert advice concerning the RESTORE Act Science Program's roles within the context of NOAA's ocean missions and policies. They should be also familiar with the organization and management of complex, interdisciplinary science programs.

Members will be appointed for three-year terms, renewable once, and serve at the discretion of the Secretary. Vacancy appointments shall be for the remainder of the unexpired term of the vacancy, and shall be renewable twice if the unexpired term is less than one year.

Anyone is eligible to nominate and self-nominations will be accepted. Nominations should provide: (1) The nominee's full name, title, institutional affiliation, and contact information; (2) the nominee's area(s) of expertise; (3) a short description of his/her qualifications relative to the kinds of advice being solicited, and (4) a resume or CV not to exceed four (4) pages in length.

The intent is to select from the nominees; however, NOAA retains the prerogative to nominate people to the working group that were not nominated through the process outlined in this FRN if it deems it is necessary to achieve the desired balance. Once selected, the SAB will post the working group members' names at *http://www.sab.noaa.gov/Working_Groups/standing/index.html.*

Dated: September 3, 2013.

Jason Donaldson,

Chief Financial Officer/Chief Administrative Officer, Office of Oceanic and Atmospheric Research, National Oceanic and Atmospheric Administration, Atmospheric Administration.

[FR Doc. 2013–21759 Filed 9–6–13; 8:45 am]

BILLING CODE 3510–KD–P

DEPARTMENT OF COMMERCE

National Telecommunications and Information Administration

First Responder Network Authority Board Special Review Committee Meeting

AGENCY: National Telecommunications and Information Administration, U.S. Department of Commerce.

ACTION: Notice of Public Meeting of the First Responder Network Authority Special Review Committee.

SUMMARY: The First Responder Network Authority (FirstNet) Board Special

Review Committee will hold a Special Meeting via telephone conference (teleconference) on September 12, 2013.

DATES: The Special Meeting will be held on Thursday, September 12, 2013, from 4:00 to 5:00 p.m. Eastern Daylight Time.

ADDRESSES: The Special Review Committee Meeting will be conducted via teleconference. Members of the public may listen to the meeting by dialing toll-free 1 (888) 469–3306 and using passcode ''FirstNet.'' Due to the limited number of ports, attendance via teleconference will be on a first-come, first-served basis.

FOR FURTHER INFORMATION CONTACT: Uzoma Onyeije, Secretary, FirstNet, U.S. Department of Commerce, 1401 Constitution Avenue NW., Washington, DC 20230: Telephone (202) 482–0016; email *uzoma@firstnet.gov.* Please direct media inquiries to NTIA's Office of Public Affairs, (202) 482–7002.

SUPPLEMENTARY INFORMATION:

Background: The Middle Class Tax Relief and Job Creation Act of 2012 (Act), Public Law 112–96, 126 Stat. 156 (2012), created FirstNet as an independent authority within NTIA. The Act directs FirstNet to establish a single nationwide, interoperable public safety broadband network. The FirstNet Board is responsible for making strategic decisions regarding FirstNet's operations.

On April 23, 2013, at a regularly scheduled FirstNet Board meeting, Sheriff Paul Fitzgerald made a motion that the Board adopt a resolution expressing concerns about FirstNet's operations. During the meeting, Sheriff Fitzgerald's motion was tabled by a vote of the Board and FirstNet Chairman Samuel Ginn requested a review of the matter. On May 8, 2013, the FirstNet Board established the Special Review Committee to look at FirstNet's compliance with applicable federal hiring and procurement rules, conflict of interest rules and open meeting requirements.

The Special Review Committee, through this Notice, provides at least two days' notice of its meeting to be held on September 12, 2013. The Special Review Committee may, by a majority vote, close a portion of the meeting as necessary to preserve the confidentiality of commercial or financial information that is privileged or confidential, to discuss personnel matters, or to discuss legal matters affecting FirstNet, including pending or potential litigation. *See* 47 U.S.C. 1424(e)(2).

Matters to Be Considered: NTIA will post an agenda for the Special Review Committee Meeting on its Web site at *http://www.ntia.doc.gov/category/firstnet* prior to the meeting. The agenda topics are subject to change.

Time and Date: The Special Review Committee Meeting will be held on September 12, 2013, from 4:00 to 5:00 p.m. Eastern Daylight Time. The times and dates are subject to change. Please refer to NTIA's Web site at *http://www.ntia.doc.gov/category/firstnet* for the most up-to-date information.

Other Information: The teleconference for the Special Review Committee Meeting is open to the public. On the date and time of the Special Meeting, members of the public may call toll-free 1 (888) 469–3306 and use passcode ''FirstNet'' to listen to the meeting. If you experience technical difficulty, please contact Helen Shaw by telephone (202) 482–1157; or via email *hshaw@ntia.doc.gov.* Public access will be limited to listen-only. Due to the limited number of ports, attendance via teleconference will be on a first-come, first-served basis.

The Special Review Committee Meeting is accessible to people with disabilities. Individuals requiring accommodations are asked to notify Mr. Onyeije, by telephone (202) 482–0016 or email *uzoma@firstnet.gov,* at least two days (2) business days before the meeting.

Records: NTIA maintains records of all Board proceedings. Board minutes will be available at *http://www.ntia.doc.gov/category/firstnet.*

Dated: September 4, 2013.

Kathy D. Smith,

Chief Counsel.

[FR Doc. 2013–21865 Filed 9–6–13; 8:45 am]

BILLING CODE 3510–60–P

DEPARTMENT OF DEFENSE

Office of the Secretary

Meeting of the Defense Advisory Committee on Women in the Services (DACOWITS)

AGENCY: Department of Defense.

ACTION: Notice.

SUMMARY: The Department of Defense is publishing this notice to announce that the following Federal Advisory Committee meeting of the Defense Advisory Committee on Women in the Services (DACOWITS) will take place.

DATES: Thursday, September 26, 2013, from 8:30 a.m. to 5:30 p.m.; Friday, September 27, 2013, from 1:30 p.m. to 4:30 p.m.

ADDRESSES: Sheraton National Hotel-Pentagon City, 900 South Orme St., Arlington, VA 22204.

FOR FURTHER INFORMATION CONTACT: Mr. Robert Bowling or DACOWITS Staff at 4000 Defense Pentagon, Room 5A734, Washington, DC 20301–4000. *Robert.d.bowling1.civ@mail.mil.* Telephone (703) 697–2122. Fax (703) 614–6233.

SUPPLEMENTARY INFORMATION:

Pursuant to the Federal Advisory Committee Act of 1972 (5 U.S.C. Appendix, as amended), the Government in the Sunshine Act of 1976 (5 U.S.C. 552b), and Section 10(a), Public Law 92–463, as amended, notice is hereby given of a forthcoming meeting of the Defense Advisory Committee on Women in the Services (DACOWITS).

The purpose of the meeting is to receive briefings and updates relating to the Committee's current work. The Committee will receive a briefing on the Navy's Family Planning Initiatives. The Committee will also receive an update briefing on the Sexual Harassment Prevention Program, and a briefing on the Army's Sexual Harassment and Assault Response Prevention (SHARP) Program. Additionally, the Committee will receive briefings from the Services on their recruiting goals and outreach programs. The Committee will also receive an update briefing on the fielding of combat uniforms and equipment for females. Finally, the Committee will propose and vote on their 2013 recommendations.

Pursuant to 41 CFR 102–3.105(j) and 102–3.140, and section 10(a)(3) of the Federal Advisory Committee Act of 1972, interested persons may submit a written statement for consideration by the Defense Advisory Committee on Women in the Services. Individuals submitting a written statement must submit their statement to the point of contact listed at the address in **FOR FURTHER INFORMATION CONTACT** no later than 5:00 p.m., Tuesday, September 24, 2013. If a written statement is not received by Tuesday, September 24, 2013, prior to the meeting, which is the subject of this notice, then it may not be provided to or considered by the Defense Advisory Committee on Women in the Services until its next open meeting. The Designated Federal Officer will review all timely submissions with the Defense Advisory Committee on Women in the Services Chair and ensure they are provided to the members of the Defense Advisory Committee on Women in the Services. If members of the public are interested in making an oral statement, a written statement should be submitted. After reviewing the written comments, the Chair and the Designated Federal

Officer will determine who of the requesting persons will be able to make an oral presentation of their issue during an open portion of this meeting or at a future meeting. Pursuant to 41 CFR 102–3.140(d), determination of who will be making an oral presentation is at the sole discretion of the Committee Chair and the Designated Federal Officer and will depend on time available and if the topics are relevant to the Committee's activities. Two minutes will be allotted to persons desiring to make an oral presentation. Oral presentations by members of the public will be permitted only on Friday, September 27, 2013 from 1:45 p.m. to 2:15 p.m. in front of the full Committee. The number of oral presentations to be made will depend on the number of requests received from members of the public.

Pursuant to 5 U.S.C. 552b and 41 CFR 102–3.140 through 102–3.165, this meeting is open to the public, subject to the availability of space.

Meeting agenda:

Thursday, September 26, 2013, from 8:30 a.m. to 5:30 p.m.

—Welcome, Introductions, Announcements
—Briefing—Request for Information Update
—Briefing—Navy Family Planning Initiatives
—Briefing—Sexual Harassment Prevention Program Update
—Briefing—Army Sexual Harassment and Assault Response Prevention Program
—Briefing—Services Recruiting Goals
—Briefing—Services Outreach Programs
—Fielding of Combat Uniforms and Equipment for Females Update

Friday, September 27, 2013, from 1:30 p.m. to 4:30 p.m.

—Announcements
—Public Comment Period
—Committee Recommendation Proposals and Voting

Dated: September 4, 2013.

Aaron Siegel,

Alternate OSD Federal Register Liaison Officer, Department of Defense.

[FR Doc. 2013–21861 Filed 9–6–13; 8:45 am]

BILLING CODE 5001–06–P

DEPARTMENT OF DEFENSE

Department of the Air Force

[Docket ID: USAF–2013–0014]

Privacy Act of 1974; System of Records

AGENCY: Department of the Air Force, DoD.

ACTION: Notice to alter a system of records.

SUMMARY: The Department of the Air Force proposes to alter a system of records notice in its existing inventory of records systems subject to the Privacy Act of 1974 (5 U.S.C. 552a), as amended.

DATES: This proposed action will be effective on October 10, 2013 unless comments are received which result in a contrary determination. Comments will be accepted on or about October 9, 2013.

ADDRESSES: You may submit comments, identified by docket number and title, by any of the following methods:

* *Federal Rulemaking Portal: http://www.regulations.gov.*

Follow the instructions for submitting comments.

* *Mail:* Federal Docket Management System Office, 4800 Mark Center Drive East Tower, 2nd Floor, Suite 02G09, Alexandria, VA 22350–3100.

Instructions: All submissions received must include the agency name and docket number for this **Federal Register** document. The general policy for comments and other submissions from members of the public is to make these submissions available for public viewing on the Internet at *http://www.regulations.gov* as they are received without change, including any personal identifiers or contact information.

FOR FURTHER INFORMATION CONTACT: Mr. Charles J. Shedrick, Department of the Air Force Privacy Office, Air Force Privacy Act Office, Office of Warfighting Integration and Chief Information officer, ATTN: SAF/CIO A6, 1800 Air Force Pentagon, Washington, DC 20330–1800, or by phone at (202) 404–6575.

SUPPLEMENTARY INFORMATION: The Department of the Air Force's notices for systems of records subject to the Privacy Act of 1974 (5 U.S.C. 552a), as amended, have been published in the **Federal Register** and are available from the address in **FOR FURTHER INFORMATION CONTACT**.

The proposed systems reports, as required by 5 U.S.C. 552a(r) of the Privacy Act, were submitted on February 21, 2013 to the House Committee on Oversight and Government Reform, the Senate Committee on Homeland Security and Governmental Affairs, and the Office of Management and Budget (OMB) pursuant to paragraph 4c of Appendix I to OMB Circular No. A–130, ''Federal Agency Responsibilities for Maintaining Records About Individuals,'' dated February 8, 1996, (February 20, 1996, 61 FR 6427).

Dated: September 4, 2013.

Aaron Siegel,

Alternate OSD Federal Register Liaison Officer, Department of Defense.

F036 AF PC D

System Name:

Officer Performance Report (OPR)/Enlisted Performance Report (EPR) Appeal Case Files (January 22, 2009, 74 FR 4015)

CHANGES:

Change System ID to read ''F036 AFPC T.''

* * * * *

SYSTEM LOCATION:

Delete entry and replace with ''Air Force Personnel Center (AFPC), 550 C Street West, Randolph Air Force Base, TX 78150–4709; Air Reserve Personnel Center, Denver, 18420 East Silver Creek Avenue, Building 390, 68, Buckley Air Force Base, CO 80011–9502; and Military Personnel Sections (MPS). Official mailing addresses are published as an appendix to the Air Force's compilation of systems of records notices.''

CATEGORIES OF INDIVIDUALS COVERED BY THE SYSTEM:

Delete entry and replace with ''Air Force Active Duty, Reserve, Air National Guard, retired and separated personnel who submit an appeal for correction of records.''

CATEGORIES OF RECORDS IN THE SYSTEM:

Delete entry and replace with ''Individual's full name, Social Security Number (SSN) and/or DoD Identification Number (DoD ID Number), address, copy of applications, supporting documents, endorsements, and correspondence reflecting the board's decision on the case and other official records.''

AUTHORITY FOR MAINTENANCE OF THE SYSTEM:

Delete entry and replace with ''10 U.S.C. 8013, Secretary of the Air Force; Department of Defense Directive 1332.41, Boards for Correction of Military Records (BCMRs) and Discharge Review Boards (DRBs); Air Force Policy Directive 36–24, Military Evaluations; Air Force Instruction 36–2603, Air Force Board for Correction of Military Records; Air Force Instruction 36–2401, Correcting Officer and Enlisted Evaluation Reports; and E.O. 9397 (SSN) as amended.''

* * * * *

RETRIEVABILITY:

Delete entry and replace with ''Name and/or SSN.''

SAFEGUARDS:

Delete entry and replace with ''Records are accessed by the program manager and by persons cleared for need-to-know. Records are stored in file cabinets in the building that are either locked or have controlled access entry requirements. Electronic files are only accessed by authorized personnel with a Secure Common Access Card (CAC) and need-to-know.''

RETENTION AND DISPOSAL:

Delete entry and replace with ''Air Force Personnel Center and Air Reserve Personnel Center case files are maintained for three calendar years from date of last action as indicated in the file, then destroyed. Military Personnel section files are maintained for two calendar years from date of last action as indicated in the file, and then destroyed. Paper records are destroyed by tearing into pieces, shredding, pulping, macerating, or burning. Electronic records are destroyed by erasing, deleting, or overwriting.''

* * * * *

NOTIFICATION PROCEDURE:

Delete entry and replace with ''Individuals seeking to determine whether this system of records contains information on themselves should address written requests to Air Force Personnel Center, Evaluations Programs Section, (HQ AFPC/DPSID), 550 C Street West, Suite 7, Randolph Air Force Base, TX 78150–4709 or to the Military Personnel Section where the appeal was processed.

Official mailing addresses are published as an appendix to the Air Force's compilation of systems of records notices.

Written request should contain full name, SSN and complete mailing address with notarized signature as below.

An unsworn declaration under penalty of perjury in accordance with section 1746 of 28 U.S.C. or notarized signatures are acceptable as a means of proving the identity of the individual.

If an unsworn declaration is executed within the United States, its territories, possessions, or commonwealths, it shall read 'I declare (or certify, verify, or state) under penalty of perjury that the foregoing is true and correct. Executed on (date). (Signature).'

If an unsworn declaration is executed outside the United States, it shall read 'I declare (or certify, verify, or state) under penalty of perjury under the laws of the United States of America that the foregoing is true and correct. Executed on (date). (Signature).' ''

RECORD ACCESS PROCEDURES:

Delete entry and replace with ''Individuals seeking to access records about themselves contained in this system should address written requests to the Air Force Personnel Center, Evaluations Programs Section, Air Force Personnel Center, (HQ AFPC/DPSID), 550 C Street West, Randolph Air Force Base, TX 78150–4709 or to the Military Personnel Section where the appeal was processed.

Official mailing addresses are published as an appendix to the Air Force's compilation of systems of records notices.''

Written request should contain full name, SSN and complete mailing address with notarized signature as below.

An unsworn declaration under penalty of perjury in accordance with section 1746 of 28 U.S.C. (Reference (n)) or notarized signatures are acceptable as a means of proving the identity of the individual.

If an unsworn declaration is executed within the United States, its territories, possessions, or commonwealths, it shall read 'I declare (or certify, verify, or state) under penalty of perjury that the foregoing is true and correct. Executed on (date). (Signature).'

If an unsworn declaration is executed outside the United States, it shall read 'I declare (or certify, verify, or state) under penalty of perjury under the laws of the United States of America that the foregoing is true and correct. Executed on (date). (Signature).' ''

* * * * *

[FR Doc. 2013–21875 Filed 9–6–13; 8:45 am]

BILLING CODE 5001–05–P

DEPARTMENT OF DEFENSE

Department of the Navy

[Docket ID: USN–2013–0034]

Proposed Collection; Comment Request

AGENCY: Headquarters Marine Corps, Plans, Policies and Operations, DoD.

ACTION: Notice.

SUMMARY: In compliance with Section 3506(c)(2)(A) of the *Paperwork Reduction Act of 1995,* Headquarters Marine Corps, Plans, Policies and Operations, announces a proposed public information collection and seeks public comment on the provisions thereof. Comments are invited on: (a) Whether the proposed collection of information is necessary for the proper performance of the functions of the agency, including whether the information shall have practical utility; (b) the accuracy of the agency's estimate of the burden of the proposed information collection; (c) ways to enhance the quality, utility, and clarity of the information to be collected; and (d) ways to minimize the burden of the information collection on respondents, including through the use of automated collection techniques or other forms of information technology.

DATES: Consideration will be given to all comments received by November 8, 2013.

ADDRESSES: You may submit comments, identified by docket number and title, by any of the following methods:

- *Federal eRulemaking Portal: http://www.regulations.gov.* Follow the instructions for submitting comments.
- *Mail:* Federal Docket Management System Office, 4800 Mark Center Drive, East Tower, Suite 02G09, Alexandria, VA 22350–3100.

Instructions: All submissions received must include the agency name, docket number and title for this **Federal Register** document. The general policy for comments and other submissions from members of the public is to make these submissions available for public viewing on the Internet at *http://www.regulations.gov* as they are received without change, including any personal identifiers or contact information.

FOR FURTHER INFORMATION CONTACT: To request more information on this proposed information collection or to obtain a copy of the proposal and associated collection instruments, please write to Headquarters Marine Corps, Plans Policies and Operations, Security Division (PS), Security Branch, Security Technologies Section, ATTN: Charles Pierce/Le'Ron Lawrence, 3000 Marine Corps Pentagon Rm 4A324, Washington, DC 20350–3000, or call 703–692–4333/703–634–2638.

SUPPLEMENTARY INFORMATION:

Title; Associated Form; and OMB Number: Department of Navy Local Population Access Registration Form; MC–XXX; OMB Control Number 0703–TBD.

Needs and Uses: The information collection requirement is necessary to control physical access to Department of Defense (DOD), Department of the Navy (DON) or U.S. Marine Corps Installations/Units controlled information, installations, facilities, or areas over which DOD, DON or U.S. Marine Corps has security responsibilities by identifying or verifying an individual through the use of biometric databases and associated

data processing/information services for designated populations for purposes of protecting U.S./Coalition/allied government/national security areas of responsibility and information; to issue badges, replace lost badges and retrieve passes upon separation; to maintain visitor statistics; collect information to adjudicate access to facility; and track the entry/exit of personnel.

Affected Public: General Public; Business or other for profit; Not-for-profit institutions.

Annual Burden Hours: 327,289.

Number of Respondents: 1,963,733.

Responses per Respondent: 1.

Average Burden per Response: 10 minutes.

Frequency: Annually.

Respondents are members of the general public, businesses or other for profit and not-for-profit institutions who are seeking to access DOD, DON or U.S. Marine Corps Installations/Bases, installations, facilities, or areas over which DOD, DON or U.S. Marine Corps has security responsibilities. The Department of the Navy Local Population Access Registration Form, MC–XXX records the personal identifiable information that is used at the time of registration for I–9 Identity proofing and to perform background checks to determine the fitness of personnel entering military installations. The completed form is used by the Marine Corps Installation Provost Marshal's Office/Police Departments to enter the records into the Installation's/Base's Physical Access Control System and the DOD's authoritative data source for the purpose of issuing a Installation Access Pass/Badge/ID and for the purpose of performing background checks. Respondents who provide their personal identifiable information are consenting to collection of information by their action of voluntarily offering their I–9 documents, or fingerprints, irises, and facial profiles for biometric collection. Failure to provide requested information may result in denial of access to DOD installations, facilities, and buildings.

Dated: September 3, 2013.

Aaron Siegel,

Alternate OSD Federal Register Liaison Officer, Department of Defense.

[FR Doc. 2013–21754 Filed 9–6–13; 8:45 am]

BILLING CODE 5001–06–P

DEPARTMENT OF EDUCATION

[Docket ID ED–2013–OELA–0117]

Request for Information To Inform the Title III Evaluation and Research Studies Agenda

AGENCY: Office of English Language Acquisition, Language Enhancement, and Academic Achievement for Limited English Proficient Students, Department of Education.

ACTION: Request for information.

SUMMARY: The U.S. Department of Education (Department) requests information on priorities for future evaluation and research studies needed to inform effective instruction, assessment, and professional development that is responsive to the needs of English learners (ELs).

DATES: Written submissions must be received by the Department by October 9, 2013.

ADDRESSES: Submit your comments through the Federal eRulemaking Portal or via postal mail, commercial delivery, or hand delivery. We will not accept comments by fax or by email. To ensure that we do not receive duplicate copies, please submit your comments only once. In addition, please include the Docket ID and the term ''Evaluation Studies'' at the top of your comments.

- *Federal eRulemaking Portal:* Go to *www.regulations.gov* to submit your comments electronically. Information on using Regulations.gov, including instructions for accessing agency documents, submitting comments, and viewing the docket, is available on the site under ''Are you new to this site?''
- *Postal Mail, Commercial Delivery, or Hand Delivery:* If you mail or deliver your comments, address them to Elizabeth Judd, Office of English Language Acquisition, Attention: Evaluation RFI, U.S. Department of Education, 400 Maryland Avenue SW., Room 5C126, Washington, DC 20202–6132.
- *Privacy Note:* The Department's policy for comments received from members of the public (including comments submitted by mail, commercial delivery, or hand delivery) is to make these submissions available for public viewing in their entirety on the Federal eRulemaking Portal. at *www.regulations.gov.* Therefore, commenters should be careful to include in their comments only information that they wish to make publicly available on the Internet.

Submission of Proprietary Information: Given the subject matter, some comments may include proprietary information as it relates to confidential commercial information. The Freedom of Information Act defines ''confidential commercial information'' as information the disclosure of which could reasonably be expected to cause substantial competitive harm. You may wish to request that we not disclose what you regard as confidential commercial information.

To assist us in making a determination on your request, we encourage you to identify any specific information in your comments that you consider confidential commercial information. Please list the information by page and paragraph numbers.

This Request for Information (RFI) is issued solely for information and planning purposes and is not a request for proposals (RFP), a notice inviting applications (NIA), or a promise to issue an RFP or NIA. This RFI does not commit the Department to contract for any supply or service whatsoever. Further, the Department is not now seeking proposals and will not accept unsolicited proposals. The Department will not pay for any information or administrative costs that you may incur in responding to this RFI.

If you do not respond to this RFI, you may still apply for future contracts and grants. The Department posts RFPs on the Federal Business Opportunities Web site (*www.fbo.gov*). The Department announces grant competitions in the **Federal Register** (*www.gpo.gov/fdsys*). It is your responsibility to monitor these sites to determine whether the Department issues an RFP or NIA after considering the information received in response to this RFI.

The documents and information submitted in response to this RFI become the property of the U.S. Government and will not be returned.

FOR FURTHER INFORMATION CONTACT: Elizabeth Judd, U.S. Department of Education, 400 Maryland Avenue SW., Room 5C126, Washington, DC 20202–6132 or by phone at 202–401–1407.

If you use a telecommunications device for the deaf (TDD) or a text telephone (TTY), call the Federal Relay Service (FRS), toll free, at 1–(800) 877–8339.

SUPPLEMENTARY INFORMATION:

Introduction

The Elementary and Secondary Education Act (ESEA) of 1965, as amended, holds States accountable for closing achievement gaps and ensuring that all children, including children with limited English proficiency, meet the same challenging academic and achievement standards all students are

expected to meet. To this end, Title III of the ESEA requires States to develop English language proficiency (ELP) standards that are aligned with challenging State academic content and student academic achievement standards. States must also develop and administer ELP assessments that are aligned with those standards, and must develop annual measurable achievement objectives (AMAOs) for English language proficiency.

To support EL student achievement, States, school districts and schools need information on effective EL instruction, assessment, and professional development practices that is informed by data from current research. With this RFI we seek to gather information on the evaluation and research studies needs of the field, which may include the needs of administrators, teachers, teacher trainers, researchers, and other members of the English learner community. The Department anticipates making use of this information to inform the development of our evaluation and research agenda in the coming years and to guide future evaluation and research studies addressing the needs of ELs.

Information on Department studies related to the needs of English learners is posted on the following Web site: *http://www.ncela.gwu.edu/edpubs/.*

Once we receive responses to this RFI, the Department will summarize the recommendations made by the public and post that summary on the Office of English language Acquisition, Language Enhancement, and Academic Achievement for Limited English Proficient Students (OELA) and the National Clearinghouse for English Language Acquisition (NCELA) Web sites for viewing. We will use the information received through this RFI to develop an agenda for evaluation and research studies that we will also publish on the OELA and NCELA Web sites.

Context for Responses

The primary goal of this RFI is to gather information that will help shape the Department's evaluation and research studies agenda.

We have developed a question with topic areas. We request information about evaluation and research studies that would be most helpful in shaping the Department's evaluation and research agenda. You do not have to respond to each topic area included in the question; however, it would be helpful if you would elaborate on each topic you choose to address. You may provide comments in any convenient format, and you may also provide relevant information that is not directly responsive to a particular topic but may, nevertheless, be helpful.

General Question Regarding potential evaluation and research studies.

In which of the following areas should the Department conduct new studies or conduct a review of the literature on existing studies?

a. Identification, screening, and assessment practices of ELs in general, or in particular, who are (1) Early learners, (2) students with disabilities, (3)secondary students, (4) students with interrupted formal education, or (5) other category of ELs.

b. Strategies for data collection, data analysis, and data-based decision-making with respect to EL assessment data.

c. The alignment of ELP standards with college- and career-ready standards and the alignment of ELP assessments with ELP standards, including assessments that are accessible to, and usable with, ELs with disabilities.

d. Key features of instruction for ELs that promote language acquisition, including academic language, social language, and content knowledge in various educational programs that provide instruction in English or in English and another language.

e. Technology-based instructional strategies that promote EL achievement.

f. Characteristics of professional development that prepares prospective teachers or currently practicing teachers who are language development specialists or content teachers of ELs to design and deliver instruction that promotes language acquisition and content knowledge.

Accessible Format: Individuals with disabilities can obtain this document in an accessible format (e.g., braille, large print, audiotape, or compact disc) upon request to the program contact person listed under **FOR FURTHER INFORMATION CONTACT**.

Electronic Access to This Document: The official version of this document is the document published in the **Federal Register.** Free Internet access to the official edition of the **Federal Register** and the Code of Federal Regulations is available via the Federal Digital System at: *www.gpo.gov/fdsys.* At this site you can view this document, as well as all other documents of this Department published in the **Federal Register,** in text or Adobe Portable Document Format (PDF). To use PDF you must have Adobe Acrobat Reader, which is available free at the site.

You may also access documents of the Department published in the **Federal Register** by using the article search feature at: *www.federalregister.gov.* Specifically, through the advanced search feature at this site, you can limit your search to documents published by the Department.

Program Authority: 20 U.S.C. 6801–7014.

Dated: September 3, 2013.

Joseph C. Conaty,

Acting Director, Office of English Language Acquisition, Language Enhancement, and Academic Achievement for Limited English Proficient Students.

[FR Doc. 2013–21767 Filed 9–6–13; 8:45 am]

BILLING CODE 4000–01–P

DEPARTMENT OF ENERGY

Federal Energy Regulatory Commission

[Project No. 14383–005]

Whitewater Green Energy, LLC; Notice of Intent to File License Application, Filing of Pre-Application Document (Pad), Commencement of Pre-Filing Process, and Scoping; Request for Comments on the Pad and Scoping Document, and Identification of Issues and Associated Study Requests

a. *Type of Filing:* Notice of Intent to File License Application for an Original License and Commencing Pre-filing Process.

b. *Project No.:* 14383–005.

c. *Dated Filed:* July 8, 2013.

d. *Submitted By:* Whitewater Green Energy, LLC.

e. *Name of Project:* Whitewater Creek Hydroelectric Project.

f. *Location:* On Whitewater and Russell creeks near Detroit, in Marion and Linn counties, Oregon. The project would be located entirely on federal lands administered by the U.S. Forest Service.

g. *Filed Pursuant to:* 18 CFR Part 5 of the Commission's Regulations.

h. *Applicant Contact:* David Harmon, Project Manager, Whitewater Green Energy, LLC, 601 7th Ave., Sweet Home, OR; Telephone: (541) 405–5236.

i. *FERC Contact:* Aaron Liberty at (202) 502–6862 or email at *aaron.liberty@ferc.gov.*

j. *Cooperating agencies:* Federal, state, local, and tribal agencies with jurisdiction and/or special expertise with respect to environmental issues that wish to cooperate in the preparation of the environmental document should follow the instructions for filing such requests described in item n below. Cooperating agencies should note the Commission's policy that agencies that cooperate in the preparation of the environmental document cannot also intervene. *See* 94 FERC ¶ 61,076 (2001).

k. With this notice, we are initiating informal consultation with: (a) the U.S. Fish and Wildlife Service and/or NOAA Fisheries under section 7 of the Endangered Species Act and the joint agency regulations thereunder at 50 CFR, Part 402; (b) NOAA Fisheries under section 305(b) of the Magnuson-Stevens Fishery Conservation and Management Act and implementing regulations at 50 CFR 600.920; and (c) the State Historic Preservation Officer, as required by section 106, National Historical Preservation Act, and the implementing regulations of the Advisory Council on Historic Preservation at 36 CFR 800.2.

l. Whitewater Green Energy, LLC, filed with the Commission a Pre-Application Document (PAD; including a proposed process plan and schedule), pursuant to 18 CFR 5.6 of the Commission's regulations.

m. A copy of the PAD is available for review at the Commission in the Public Reference Room or may be viewed on the Commission's Web site (*http://www.ferc.gov*), using the ''eLibrary'' link. Enter the docket number, excluding the last three digits in the docket number field to access the document. For assistance, contact FERC Online Support at *FERCOnlineSupport@ferc.gov* or toll free at 1–866–208–3676, or for TTY, (202) 502–8659. A copy is also available for inspection and reproduction at the address in paragraph h.

Register online at *http://www.ferc.gov/docs-filing/esubscription.asp* to be notified via email of new filing and issuances related to this or other pending projects. For assistance, contact FERC Online Support.

n. With this notice, we are soliciting comments on the PAD and Commission's staff Scoping Document 1 (SD1), as well as study requests. All comments on the PAD and SD1, and study requests should be sent to the address above in paragraph h. In addition, all comments on the PAD and SD1, study requests, requests for cooperating agency status, and all communications to and from Commission staff related to the merits of the potential application must be filed with the Commission. Documents may be filed electronically via the Internet. See 18 CFR 385.2001(a)(1)(iii) and the instructions on the Commission's Web site *http://www.ferc.gov/docs-filing/efiling.asp.* Commenters can submit brief comments up to 6,000 characters, without prior registration, using the eComment system at *http://www.ferc.gov/docs-filing/ecomment.asp.* You must include your name and contact information at the end of your comments. For assistance, please contact FERC Online Support. Although the Commission strongly encourages electronic filing, documents may also be paper-filed. To paper-file, send documents to: Kimberly D. Bose, Secretary, Federal Energy Regulatory Commission, 888 First Street NE., Washington, DC 20426.

All filings with the Commission must include on the first page, project name (Whitewater Creek Hydroelectric Project) and number (P–14383–005), and bear the appropriate heading: ''Comments on Pre-Application Document,'' ''Study Requests,'' ''Comments on Scoping Document 1,'' ''Request for Cooperating Agency Status,'' or ''Communications to and from Commission Staff.'' Any individual or entity interested in submitting study requests, commenting on the PAD or SD1, and any agency requesting cooperating status must do so by October 29, 2013.

o. Although our current intent is to prepare an environmental assessment (EA), there is the possibility that an Environmental Impact Statement (EIS) will be required. Nevertheless, this meeting will satisfy the NEPA scoping requirements, irrespective of whether an EA or EIS is issued by the Commission.

Scoping Meetings

Commission staff will hold two scoping meetings in the vicinity of the project at the time and place noted below. The daytime meeting will focus on resource agency, Indian tribes, and non-governmental organization concerns, while the evening meeting is primarily for receiving input from the public. We invite all interested individuals, organizations, and agencies to attend one or both of the meetings, and to assist staff in identifying particular study needs, as well as the scope of environmental issues to be addressed in the environmental document. The times and locations of these meetings are as follows:

Evening Scoping Meeting

Date and Time: Wednesday, September 18, 2013, 6:00 p.m. (PST).

Location: Detroit Ranger Station, 44125 North Santiam Highway SE., Detroit, OR 97342.

Phone Number: (541) 405–5236.

Daytime Scoping Meeting

Date and Time: Thursday, September 19, 2013, 9:00 a.m. (PST).

Location: Detroit Ranger Station, 44125 North Santiam Highway SE., Detroit, OR 97342.

Phone Number: (541) 405–5236.

Scoping Document 1 (SD1), which outlines the subject areas to be addressed in the environmental document, was mailed to the individuals and entities on the Commission's mailing list. Copies of SD1 will be available at the scoping meetings, or may be viewed on the web at *http://www.ferc.gov,* using the ''eLibrary'' link. Follow the directions for accessing information in paragraph m. Based on all oral and written comments, a Scoping Document 2 (SD2) may be issued. SD2 may include a revised process plan and schedule, as well as a list of issues, identified through the scoping process.

Environmental Site Review

The applicant and Commission staff will conduct an *Environmental Site Review* of the project on Thursday, September 19, 2013, immediately following the daytime scoping meeting. All participants should meet at the Detroit Ranger Station. All participants are responsible for their own transportation. Anyone with questions about the site visit should contact Mr. David Harmon of Whitewater Green Energy, LLC at (541) 405–5236. Please notify Mr. Harmon by September 12, 2013 if you plan to attend the environmental site review.

Meeting Objectives

At the scoping meetings, staff will: (1) Initiate scoping of the issues; (2) review and discuss existing conditions and resource management objectives; (3) review and discuss existing information and identify preliminary information and study needs; (4) review and discuss the process plan and schedule for pre-filing activity that incorporates the time frames provided for in Part 5 of the Commission's regulations and, to the extent possible, maximizes coordination of federal, state, and tribal permitting and certification processes; and (5) discuss the appropriateness of any federal or state agency or Indian tribe acting as a cooperating agency for development of an environmental document.

Meeting participants should come prepared to discuss their issues and/or concerns. Please review the PAD in preparation for the scoping meetings. Directions on how to obtain a copy of the PAD and SD1 are included in item m of this document.

Meeting Procedures

The meetings will be recorded by a stenographer and will be placed in the public records of the project.

Dated: August 30, 2013.

Kimberly D. Bose,

Secretary.

[FR Doc. 2013–21831 Filed 9–6–13; 8:45 am]

BILLING CODE 6717–01–P

DEPARTMENT OF ENERGY

Federal Energy Regulatory Commission

[Project No. 2337–076]

PacifiCorp Energy; Notice of Intent To File License Application, Filing of Pre-Application Document (Pad), Commencement of Pre-Filing Process, and Scoping; Request for Comments on the Pad and Scoping Document, and Identification of Issues and Associated Study Requests

a. *Type of Filing:* Notice of Intent to File License Application for a New License and Commencing Pre-filing Process.

b. *Project No.:* 2337–076.

c. *Date Filed:* July 1, 2013.

d. *Submitted By:* PacifiCorp Energy.

e. *Name of Project:* Prospect No. 3 Hydroelectric Project.

f. *Location:* On the South Fork Rogue River, in Jackson County, Oregon. The project occupies 38.1 acres of United States lands within the Rogue River-Siskiyou National Forest under the jurisdiction of the U.S. Forest Service.

g. *Filed Pursuant to:* 18 CFR Part 5 of the Commission's Regulations.

h. *Applicant Contact:* Steve Albertelli, Relicensing Project Manager, PacifiCorp Energy, 925 South Grape Street, Building 5, Medford, OR 97501; (541) 776–6676 or email at *steve.albertelli@pacificorp.com.*

i. *FERC Contact:* Dianne Rodman at (202) 502–6077 or email at *dianne.rodman@ferc.gov.*

j. *Cooperating agencies:* Federal, state, local, and tribal agencies with jurisdiction and/or special expertise with respect to environmental issues that wish to cooperate in the preparation of the environmental document should follow the instructions for filing such requests described in item o below. Cooperating agencies should note the Commission's policy that agencies that cooperate in the preparation of the environmental document cannot also intervene. *See* 94 FERC ¶ 61,076 (2001).

k. *With this notice, we are initiating informal consultation with:* (a) The U.S. Fish and Wildlife Service and/or National Marine Fisheries Service under section 7 of the Endangered Species Act and the joint agency regulations thereunder at 50 CFR, Part 402 and (b) the State Historic Preservation Officer, as required by section 106, National Historical Preservation Act, and the implementing regulations of the Advisory Council on Historic Preservation at 36 CFR 800.2.

l. With this notice, we are designating PacifiCorp Energy as the Commission's non-federal representative for carrying out informal consultation, pursuant to section 7 of the Endangered Species Act and section 106 of the National Historic Preservation Act.

m. PacifiCorp Energy filed with the Commission a Pre-Application Document (PAD; including a proposed process plan and schedule), pursuant to 18 CFR 5.6 of the Commission's regulations.

n. A copy of the PAD is available for review at the Commission in the Public Reference Room or may be viewed on the Commission's Web site (*http://www.ferc.gov*), using the ''eLibrary'' link. Enter the docket number, excluding the last three digits in the docket number field, to access the document. For assistance, contact FERC Online Support at *FERCOnlineSupport@ferc.gov,* (866) 208–3676 (toll free), or (202) 502–8659 (TTY). A copy is also available for inspection and reproduction at the address in paragraph h.

Register online at *http://www.ferc.gov/docs-filing/esubscription.asp* to be notified via email of new filing and issuances related to this or other pending projects. For assistance, contact FERC Online Support.

o. With this notice, we are soliciting comments on the PAD and Commission's staff Scoping Document 1 (SD1), as well as study requests. All comments on the PAD and SD1, and study requests should be sent to the address above in paragraph h. In addition, all comments on the PAD and SD1, study requests, requests for cooperating agency status, and all communications to and from Commission staff related to the merits of the potential application must be filed with the Commission.

The Commission strongly encourages electronic filing. Please file all documents using the Commission's eFiling system at *http://www.ferc.gov/docs-filing/efiling.asp.* Commenters can submit brief comments up to 6,000 characters, without prior registration, using the eComment system at *http://www.ferc.gov/docs-filing/ecomment.asp.* You must include your name and contact information at the end of your comments. For assistance, please contact FERC Online Support at *FERCOnlineSupport@ferc.gov.* In lieu of electronic filing, please send a paper copy to: Secretary, Federal Energy Regulatory Commission, 888 First Street NE., Washington, DC 20426. The first page of any filing should include docket number P–2337–076.

All filings with the Commission must bear the appropriate heading: ''Comments on Pre-Application Document,'' ''Study Requests,'' ''Comments on Scoping Document 1,'' ''Request for Cooperating Agency Status,'' or ''Communications to and from Commission Staff.'' Any individual or entity interested in submitting study requests, commenting on the PAD or SD1, and any agency requesting cooperating status must do so by October 29, 2013.

p. Although our current intent is to prepare an environmental assessment (EA), there is the possibility that an Environmental Impact Statement (EIS) will be required. Nevertheless, this meeting will satisfy the NEPA scoping requirements, irrespective of whether an EA or EIS is issued by the Commission.

Scoping Meetings

Commission staff will hold two scoping meetings in the vicinity of the project at the time and place noted below. The daytime meeting will focus on resource agency, Indian tribes, and non-governmental organization concerns, while the evening meeting is primarily for receiving input from the public. We invite all interested individuals, organizations, and agencies to attend one or both of the meetings, and to assist staff in identifying particular study needs, as well as the scope of environmental issues to be addressed in the environmental document. The times and locations of these meetings are as follows:

Daytime Scoping Meeting

Date and Time: Tuesday, September 24, 2013, 9:00 a.m. (PST).

Location: Ramada Medford, 2250 Biddle Road, Medford, OR 97504.

Phone Number: (541) 779–3141.

Evening Scoping Meeting

Date and Time: Tuesday, September 24, 2013, 7:00 p.m. (PST).

Location: Ramada Medford, 2250 Biddle Road, Medford, OR 97504.

Phone Number: (541) 779–3141.

Scoping Document 1 (SD1), which outlines the subject areas to be addressed in the environmental document, was mailed to the individuals and entities on the Commission's mailing list. Copies of SD1 will be available at the scoping meetings, or may be viewed on the web at *http://www.ferc.gov,* using the

''eLibrary'' link. Follow the directions for accessing information in paragraph n. Based on all oral and written comments, a Scoping Document 2 (SD2) may be issued. SD2 may include a revised process plan and schedule, as well as a list of issues, identified through the scoping process.

Environmental Site Review

PacifiCorp Energy and Commission staff will conduct an Environmental Site Review of the project on Tuesday, September 24, 2013, starting at 1:00 p.m. (PST). All participants should meet at the Prospect Warehouse, located at 1111 Mill Creek Drive, Prospect, OR 97536. Please contact Mr. Steve Albertelli at (541) 776–6676 or *steve.albertelli@pacificorp.com* by September 23, 2013, if you plan to attend the environmental site review.

Meeting Objectives

At the scoping meetings, staff will: (1) Initiate scoping of the issues; (2) review and discuss existing conditions and resource management objectives; (3) review and discuss existing information and identify preliminary information and study needs; (4) review and discuss the process plan and schedule for pre-filing activity that incorporates the time frames provided for in Part 5 of the Commission's regulations and, to the extent possible, maximizes coordination of federal, state, and tribal permitting and certification processes; and (5) discuss the appropriateness of any federal or state agency or Indian tribe acting as a cooperating agency for development of an environmental document.

Meeting participants should come prepared to discuss their issues and/or concerns. Please review the PAD in preparation for the scoping meetings. Directions on how to obtain a copy of the PAD and SD1 are included in item n. of this document.

Meeting Procedures

The meetings will be recorded by a stenographer and will be placed in the public records of the project.

Dated: August 30, 2013.

Kimberly D. Bose,

Secretary.

[FR Doc. 2013–21829 Filed 9–6–13; 8:45 am]

BILLING CODE 6717–01–P

DEPARTMENT OF ENERGY

Federal Energy Regulatory Commission

[Project No. 12693–003]

Sutton Hydroelectric Company, LLC; Notice of Preliminary Permit Application Accepted for Filing and Soliciting Comments, Motions To Intervene, and Competing Applications

On March 1, 2013, Sutton Hydroelectric Company, LLC filed an application for a successive preliminary permit, pursuant to section 4(f) of the Federal Power Act (FPA), proposing to study the feasibility of the Sutton Hydroelectric Project (project) to be located at the U.S. Army Corps of Engineers Sutton Dam, on the Elk River, in Sutton, Braxton County, West Virginia. The sole purpose of a preliminary permit, if issued, is to grant the permit holder priority to file a license application during the permit term. A preliminary permit does not authorize the permit holder to perform any land-disturbing activities or otherwise enter upon lands or waters owned by others without the owners' express permission.

The proposed project would utilize the existing U.S. Army Corps of Engineers' Sutton Dam and would consist of: (1) A proposed powerhouse containing three generating units with a total generating capacity of 9.2 megawatts; (2) a 12-foot-diameter penstock; (3) a proposed 4,000-foot-long, 138-kilovolt transmission line; (4) a tailrace, and (5) appurtenant facilities. The project would have an estimated average annual generation of 36.0 gigawatt-hours.

Applicant Contact: Mr. David C. Sinclair, President, Advanced Hydro Solutions, LLC, 3000 Auburn Drive, Suite 430, Beachwood, OH 4122–4340; phone: (216) 472–5581.

FERC Contact: Tim Looney; phone: (202) 502–6096.

Deadline for filing comments, motions to intervene, competing applications (without notices of intent), or notices of intent to file competing applications: 60 days from the issuance of this notice. Competing applications and notices of intent must meet the requirements of 18 CFR 4.36.

The Commission strongly encourages electronic filing. Please file comments, motions to intervene, notices of intent, and competing applications using the Commission's eFiling system at *http://www.ferc.gov/docs-filing/efiling.asp.* Commenters can submit brief comments up to 6,000 characters, without prior registration, using the eComment system at *http://www.ferc.gov/docs-filing/ecomment.asp.* You must include your name and contact information at the end of your comments. For assistance, please contact FERC Online Support at *FERCOnlineSupport@ferc.gov,* (866) 208–3676 (toll free), or (202) 502–8659 (TTY). In lieu of electronic filing, please send a paper copy to: Secretary, Federal Energy Regulatory Commission, 888 First Street NE., Washington, DC 20426. The first page of any filing should include docket number P–12693–003.

More information about this project, including a copy of the application, can be viewed or printed on the ''eLibrary'' link of Commission's Web site at *http://www.ferc.gov/docs-filing/elibrary.asp.* Enter the docket number (P–12693) in the docket number field to access the document. For assistance, contact FERC Online Support.

Dated: August 30, 2013.

Kimberly D. Bose,

Secretary.

[FR Doc. 2013–21830 Filed 9–6–13; 8:45 am]

BILLING CODE 6717–01–P

DEPARTMENT OF ENERGY

Federal Energy Regulatory Commission

[Docket No. CP13–523–000]

Transcontinental Gas Pipe Line Company, LLC; Notice of Intent To Prepare an Environmental Assessment for the Proposed Mobile Bay South III Expansion Project and Request for Comments on Environmental Issues

The staff of the Federal Energy Regulatory Commission (FERC or Commission) will prepare an environmental assessment (EA) that will discuss the environmental impacts of the Mobile Bay South III Expansion Project involving construction and operation of facilities by Transcontinental Gas Pipe Line Company, LLC (Transco) in Mobile County, Alabama. The Commission will use this EA in its decision-making process to determine whether the project is in the public convenience and necessity.

This notice announces the opening of the scoping process the Commission will use to gather input from the public and interested agencies on the project. Your input will help the Commission staff determine what issues they need to evaluate in the EA. Please note that the scoping period will close on September 30, 2013.

This notice is being sent to the Commission's current environmental

mailing list for this project. State and local government representatives should notify their constituents of this proposed project and encourage them to comment on their areas of concern.

If you are a landowner receiving this notice, a pipeline company representative may contact you about the acquisition of an easement to construct, operate, and maintain the proposed facilities. The company would seek to negotiate a mutually acceptable agreement. However, if the Commission approves the project, that approval conveys with it the right of eminent domain. Therefore, if easement negotiations fail to produce an agreement, the pipeline company could initiate condemnation proceedings where compensation would be determined in accordance with state law.

Transco provided landowners with a fact sheet prepared by the FERC entitled ''An Interstate Natural Gas Facility On My Land? What Do I Need To Know?'' This fact sheet addresses a number of typically-asked questions, including the use of eminent domain and how to participate in the Commission's proceedings. It is also available for viewing on the FERC Web site (*www.ferc.gov*).

Summary of the Proposed Project

Transco proposes to add a new compressor unit to its existing Compressor Station 85 in Choctaw County, Alabama and up-rate an existing compressor unit at its existing Compressor Station 83 in Mobile County, Alabama. The Mobile Bay South III Expansion Project would enable firm transportation service of 225,000 dekatherms per day (dth/d) from Compressor Station 85 Receipt Points southward to the Citronelle and Bay Gas Storage Interconnections while preserving Transco's capability to provide its existing certificated levels of northbound and southbound firm transportation service on the Mobile Bay Lateral.

The Mobile Bay South III Expansion Project would consist of the following facilities:

- Adding 20,500-horsepower (hp) of compression at Transco's existing Compressor Station 85 located at the interconnection of the Mobile Bay Lateral and Transco's main line in Choctaw County, Alabama;
- Constructing approximately 2,500 feet of 30-inch-diameter pipeline to connect high pressure supply from the interconnection between the suction header of the new unit and existing units at Compressor Station 85;
- Modifying existing compressors 1, 2 and 3 at Compressor Station 85 to allow for operation at higher suction and discharge pressures; and
- Rewheeling, installing associated inlet air cooling for and up-rating an existing 15,000-hp compressor to 16,000-hp at Transco's existing Compressor Station 83 in Mobile County, Alabama.

The general location of the project facilities is shown in appendix 1.[1]

Land Requirements for Construction

Construction of the proposed facilities would disturb about 38.18 acres of land, including the aboveground facilities and associated pipeline construction. Following construction, the Project would permanently impact approximately 2.20 acres for operation of the facilities; the remaining acreage would revert to former uses.

The EA Process

The National Environmental Policy Act (NEPA) requires the Commission to take into account the environmental impacts that could result from an action whenever it considers the issuance of a Certificate of Public Convenience and Necessity. NEPA also requires us[2] to discover and address concerns the public may have about proposals. This process is referred to as ''scoping.'' The main goal of the scoping process is to focus the analysis in the EA on the important environmental issues. By this notice, the Commission requests public comments on the scope of the issues to address in the EA. We will consider all filed comments during the preparation of the EA.

In the EA we will discuss impacts that could occur as a result of the construction and operation of the proposed project under these general headings:

- Geology and soils;
- Land use;
- Water resources and wetlands;
- Cultural resources;
- Vegetation and wildlife;
- Endangered and threatened species;
- Air quality and noise;
- Public safety; and
- Cumulative impacts.

We will also evaluate reasonable alternatives to the proposed project or portions of the project, and make recommendations on how to lessen or avoid impacts on the various resource areas.

The EA will present our independent analysis of the issues. The EA will be available in the public record through eLibrary. Depending on the comments received during the scoping process, we may also publish and distribute the EA to the public for an allotted comment period. We will consider all comments on the EA before making our recommendations to the Commission. To ensure we have the opportunity to consider and address your comments, please carefully follow the instructions in the Public Participation section beginning on page 5.

With this notice, we are asking agencies with jurisdiction by law and/or special expertise with respect to the environmental issues of this project to formally cooperate with us in the preparation of the EA.[3] Agencies that would like to request cooperating agency status should follow the instructions for filing comments provided under the Public Participation section of this notice.

Consultations Under Section 106 of the National Historic Preservation Act

In accordance with the Advisory Council on Historic Preservation's implementing regulations for section 106 of the National Historic Preservation Act, we are using this notice to initiate consultation with applicable State Historic Preservation Office (SHPO), and to solicit their views and those of other government agencies, interested Indian tribes, and the public on the project's potential effects on historic properties.[4] We will define the project-specific Area of Potential Effects (APE) in consultation with the SHPO as the project develops. On natural gas facility projects, the APE at a minimum encompasses all areas subject to ground disturbance (examples include construction right-of-way, contractor/pipe storage yards, compressor stations, and access roads). Our EA for this project will document our findings on the impacts on historic properties and summarize the status of consultations under section 106.

[1] The appendices referenced in this notice will not appear in the **Federal Register**. Copies of appendices were sent to all those receiving this notice in the mail and are available at *www.ferc.gov* using the link called ''eLibrary'' or from the Commission's Public Reference Room, 888 First Street NE., Washington, DC 20426, or call (202) 502–8371. For instructions on connecting to eLibrary, refer to the last page of this notice.

[2] ''We,'' ''us,'' and ''our'' refer to the environmental staff of the Commission's Office of Energy Projects.

[3] The Council on Environmental Quality regulations addressing cooperating agency responsibilities are at Title 40, Code of Federal Regulations, § 1501.6.

[4] The Advisory Council on Historic Preservation's regulations are at Title 36, Code of Federal Regulations, Part 800. Those regulations define historic properties as any prehistoric or historic district, site, building, structure, or object included in or eligible for inclusion in the National Register of Historic Places.

Currently Identified Environmental Issues

We have already identified several issues that we think deserve attention based on a preliminary review of the proposed facilities and the environmental information provided by Transco. This preliminary list of issues may be changed based on your comments and our analysis.

- Cumulative noise impacts on the communities in the vicinity of Compressor Station 85

Public Participation

You can make a difference by providing us with your specific comments or concerns about the project. Your comments should focus on the potential environmental effects, reasonable alternatives, and measures to avoid or lessen environmental impacts. The more specific your comments, the more useful they will be. To ensure that your comments are timely and properly recorded, please send your comments so that the Commission receives them in Washington, DC on or before September 30, 2013.

For your convenience, there are three methods which you can use to submit your comments to the Commission. In all instances please reference the project docket number (CP13–523–000) with your submission. The Commission encourages electronic filing of comments and has expert staff available to assist you at (202) 502–8258 or *efiling@ferc.gov.*

(1) You can file your comments electronically using the *eComment* feature on the Commission's Web site (*www.ferc.gov*) under the link to *Documents and Filings.* This is an easy method for interested persons to submit brief, text-only comments on a project;

(2) You can file your comments electronically using the *eFiling* feature on the Commission's Web site (*www.ferc.gov*) under the link to *Documents and Filings.* With eFiling, you can provide comments in a variety of formats by attaching them as a file with your submission. New eFiling users must first create an account by clicking on ''*eRegister.''* You must select the type of filing you are making. If you are filing a comment on a particular project, please select ''Comment on a Filing''; or

(3) You can file a paper copy of your comments by mailing them to the following address: Kimberly D. Bose, Secretary, Federal Energy Regulatory Commission, 888 First Street NE., Room 1A, Washington, DC 20426.

Environmental Mailing List

The environmental mailing list includes federal, state, and local government representatives and agencies; elected officials; environmental and public interest groups; Native American Tribes; other interested parties; and local libraries and newspapers. This list also includes all affected landowners (as defined in the Commission's regulations) who are potential right-of-way grantors, whose property may be used temporarily for project purposes, or who own homes within certain distances of aboveground facilities, and anyone who submits comments on the project. We will update the environmental mailing list as the analysis proceeds to ensure that we send the information related to this environmental review to all individuals, organizations, and government entities interested in and/or potentially affected by the proposed project.

If we publish and distribute the EA, copies will be sent to the environmental mailing list for public review and comment. If you would prefer to receive a paper copy of the document instead of the CD version or would like to remove your name from the mailing list, please return the attached Information Request (appendix 2).

Becoming an Intervenor

In addition to involvement in the EA scoping process, you may want to become an ''intervenor'' which is an official party to the Commission's proceeding. Intervenors play a more formal role in the process and are able to file briefs, appear at hearings, and be heard by the courts if they choose to appeal the Commission's final ruling. An intervenor formally participates in the proceeding by filing a request to intervene. Instructions for becoming an intervenor are in the User's Guide under the ''e-filing'' link on the Commission's Web site.

Additional Information

Additional information about the project is available from the Commission's Office of External Affairs, at (866) 208–FERC, or on the FERC Web site at *www.ferc.gov* using the ''eLibrary'' link. Click on the eLibrary link, click on ''General Search'' and enter the docket number, excluding the last three digits in the Docket Number field (i.e., CP13–523). Be sure you have selected an appropriate date range. For assistance, please contact FERC Online Support at *FercOnlineSupport@ferc.gov* or toll free at (866) 208–3676, or for TTY, contact (202) 502–8659. The eLibrary link also provides access to the texts of formal documents issued by the Commission, such as orders, notices, and rulemakings.

In addition, the Commission now offers a free service called eSubscription which allows you to keep track of all formal issuances and submittals in specific dockets. This can reduce the amount of time you spend researching proceedings by automatically providing you with notification of these filings, document summaries, and direct links to the documents. Go to *www.ferc.gov/esubscribenow.htm.*

Finally, public meetings or site visits will be posted on the Commission's calendar located at *www.ferc.gov/EventCalendar/EventsList.aspx* along with other related information.

Dated: August 30, 2013.

Kimberly D. Bose,

Secretary.

[FR Doc. 2013–21828 Filed 9–6–13; 8:45 am]

BILLING CODE 6717–01–P

FARM CREDIT SYSTEM INSURANCE CORPORATION

Farm Credit System Insurance Corporation Board; Regular Meeting

AGENCY: Farm Credit System Insurance Corporation.

SUMMARY: Notice is hereby given of the regular meeting of the Farm Credit System Insurance Corporation Board (Board).

DATE AND TIME: The meeting of the Board will be held at the offices of the Farm Credit Administration in McLean, Virginia, on September 12, 2013, from 1:00 p.m. until such time as the Board concludes its business.

FOR FURTHER INFORMATION CONTACT: Dale L. Aultman, Secretary to the Farm Credit System Insurance Corporation Board, (703) 883–4009, TTY (703) 883–4056.

ADDRESSES: Farm Credit System Insurance Corporation, 1501 Farm Credit Drive, McLean, Virginia 22102.

SUPPLEMENTARY INFORMATION: Parts of this meeting of the Board will be open to the public (limited space available) and parts will be closed to the public. In order to increase the accessibility to Board meetings, persons requiring assistance should make arrangements in advance. The matters to be considered at the meeting are:

Closed Session

- Confidential Report on Farm Credit System Performance

Open Session

A. Approval of Minutes

- June 13, 2013

B. Business Reports

- FCSIC Quarterly Financial Reports
- Report on Insured and Other Obligations
- Quarterly Report on Annual Performance Plan

C. New Business

- Annual Performance Plan FY 2014–2015
- Proposed 2014 and 2015 Budgets
- Insurance Fund Progress Review and Setting of Premium Range Guidance for 2014

Dated: September 4, 2013.

Dale L. Aultman,

Secretary, Farm Credit System Insurance Corporation Board.

[FR Doc. 2013–21855 Filed 9–6–13; 8:45 am]

BILLING CODE 6710–01–P

FEDERAL COMMUNICATIONS COMMISSION

Radio Broadcasting Services; AM or FM Proposals To Change the Community of License

AGENCY: Federal Communications Commission.

ACTION: Notice.

SUMMARY: The following applicants filed AM or FM proposals to change the community of license: CONNOISSEUR MEDIA OF ERIE, LLC, Station NEW, Facility ID 191524, BNPH–20130724ABK, From ERIE, PA, To MINA, NY; CRAWFORD, CHARLES E, Station NEW, Facility ID 191559, BNPH–20130723AEA, From CROWELL, TX, To LUEDERS, TX; CRAWFORD, CHARLES E, Station NEW, Facility ID 191560, BNPH–20130723AEB, From SONORA, TX, To CHRISTOVAL, TX; DAIJ MEDIA, LLC, Station KJOZ, Facility ID 20625, BP–20120731AAA, From CONROE, TX, To BAYTOWN, TX; DALHART RADIO, INC., Station NEW, Facility ID 191569, BNPH–20130724AGO, From LEAKEY, TX, To COMSTOCK, TX; DMC BROADCASTING INC., Station NEW, Facility ID 191511, BNPH–20130724AGJ, From TAOS PUEBLO, NM, To SPRINGER, NM; GALAXY SYRACUSE LICENSEE LLC, Station WKRH, Facility ID 56996, BPH–20130708ABZ, From MINETTO, NY, To FAIR HAVEN, NY; GALAXY SYRACUSE LICENSEE LLC, Station WTKV, Facility ID 24131, BPH–20130708ACD, From OSWEGO, NY, To MINETTO, NY; HISPANIC TARGET MEDIA INC., Station NEW, Facility ID 191516, BNPH–20130724AGP, From SAN JOAQUIN, CA, To KETTLEMAN CITY, CA; HISPANIC TARGET MEDIA INC., Station NEW, Facility ID 191515, BNPH–20130724AGR, From ROSWELL, NM, To CAPITAN, NM; INDIANA COMMUNITY RADIO CORPORATION, Station WBOO, Facility ID 174726, BPED–20130628AII, From MORGANFIELD, KY, To ROSICLARE, IL; JACKMAN HOLDING COMPANY, LLC, Station NEW, Facility ID 191565, BNPH–20130724AGN, From BEAVER, UT, To PARAGONAH, UT; KBI, Station NEW, Facility ID 191545, BNPH–20130724AEB, From PRAIRIE CITY, OR, To ISLAND CITY, OR; KONA COAST RADIO, LLC, Station NEW, Facility ID 191490, BNPH–20130724AGQ, From WHEATLAND, WY, To LINGLE, WY; KXOJ, INC., Station NEW, Facility ID 191580, BNPH–20130625ADA, From HOLDENVILLE, OK, To WAYNE, OK; L. TOPAZ ENTERPRISES, INC., Station NEW, Facility ID 191561, BNPH–20130722AAB, From MONUMENT, OR, To HAINES, OR; MULTI–CULTURAL DIVERSITY RADIO, INC., Station NEW, Facility ID 191574, BNPH–20130708ABP, From TIGERTON, WI, To CAROLINE, WI; POINT FIVE LLC, Station NEW, Facility ID 191523, BNPH–20130724ABX, From MOJAVE, CA, To METTLER, CA; RUDEX BROADCASTING LIMITED CORPORATION, Station KSDT, Facility ID 36830, BP–20130702AAA, From HEMET, CA, To REDLANDS, CA; SYNERGY LAKESHORE LICENSES, LLC, Station WLDN, Facility ID 189561, BPH–20130801AON, From PENTWATER, MI, To LUDINGTON, MI; SYNERGY MEDIA, INC., Station WKLA, Facility ID 10809, BPH–20130801AOK, From LUDINGTON, MI, To THOMPSONVILLE, MI; THE MONTANA RADIO COMPANY, LLC, Station KTRO, Facility ID 183371, BPH–20130625ADB, From ROUNDUP, MT, To STANFORD, MT; THE WORSHIP CENTER OF KINGSVILLE, Station KZTX, Facility ID 174991, BMPED–20130701AAA, From FALFURRIAS, TX, To ENCINO, TX; UNITED BROADCASTING COMPANY, INC, Station KTKK, Facility ID 14890, BP–20130701AAQ, From SANDY, UT, To KEARNS, UT.

DATES: The agency must receive comments on or before November 8, 2013.

ADDRESSES: Federal Communications Commission, 445 Twelfth Street SW., Washington, DC 20554.

FOR FURTHER INFORMATION CONTACT: Tung Bui, 202–418–2700.

SUPPLEMENTARY INFORMATION: The full text of these applications is available for inspection and copying during normal business hours in the Commission's Reference Center, 445 12th Street SW., Washington, DC 20554 or electronically via the Media Bureau's Consolidated Data Base System, *http://svartifoss2.fcc.gov/prod/cdbs/pubacc/prod/cdbs_pa.htm.* A copy of this application may also be purchased from the Commission's duplicating contractor, Best Copy and Printing, Inc., 445 12th Street SW., Room CY–B402, Washington, DC 20554, telephone 1–800–378–3160 or *www.BCPIWEB.com.*

Federal Communications Commission.

James D. Bradshaw,

Deputy Chief, Audio Division, Media Bureau.

[FR Doc. 2013–21774 Filed 9–6–13; 8:45 am]

BILLING CODE 6712–01–P

FEDERAL DEPOSIT INSURANCE CORPORATION

Agency Information Collection Activities: Submission for OMB Review; Comment Request Re: Certified Statement for Semiannual Deposit Insurance Assessment

AGENCY: Federal Deposit Insurance Corporation (FDIC).

ACTION: Notice and request for comment.

SUMMARY: In accordance with the requirements of the Paperwork Reduction Act (PRA) of 1995 (44 U.S.C. chapter 35), the FDIC may not conduct or sponsor, and the respondent is not required to respond to, an information collection unless it displays a currently valid Office of Management and Budget (OMB) control number. As part of its continuing effort to reduce paperwork and respondent burden, the FDIC invites the general public and other Federal agencies to take this opportunity to comment on renewal of an existing information collection, as required by the Paperwork Reduction Act of 1995 (44 U.S.C. chapter 35). On July 3, 2013 (78 FR 40142), the FDIC requested comment for 60 days on renewal of its *Certified Statement for Semiannual Deposit Insurance Assessment* information collection, which is currently approved under OMB Control No. 3064–0057. No comments were received on the proposal. The FDIC hereby gives notice of submission to OMB of its request to renew the collection. The information collection request to OMB proposes to

change the name of the collection to *Quarterly Certified Statement Invoice for Deposit Insurance Assessment* to more accurately reflect current practice and corrects the frequency of response to quarterly.

DATES: Comments must be submitted on or before October 9, 2013.

ADDRESSES: Interested parties are invited to submit written comments to the FDIC by any of the following methods:

- *http://www.FDIC.gov/regulations/laws/federal/notices.html.*
- *Email: comments@fdic.gov.* Include the name of the collection in the subject line of the message.
- *Mail:* Leneta G. Gregorie (202–898–3719), Counsel, Room NY–5050, Federal Deposit Insurance Corporation, 550 17th Street NW., Washington, DC 20429.
- *Hand Delivery:* Comments may be hand-delivered to the guard station at the rear of the 17th Street Building (located on F Street), on business days between 7:00 a.m. and 5:00 p.m.

All comments should refer to the relevant OMB control number. A copy of the comments may also be submitted to the OMB desk officer for the FDIC: Office of Information and Regulatory Affairs, Office of Management and Budget, New Executive Office Building, Washington, DC 20503.

FOR FURTHER INFORMATION CONTACT: Leneta Gregorie, at the FDIC address above.

SUPPLEMENTARY INFORMATION:

Proposal to renew the following currently approved collections of information:

Title: Certified Statement for Semiannual Deposit Insurance Assessment.

OMB Number: 3064–0057.

Frequency of Response: Quarterly.

Affected Public: FDIC-insured depository institutions.

Estimated Number of Respondents: 6,965.

Estimated Time per Response: 20 minutes.

Total Annual Burden: 9,287 hours.

General Description of Collection: The FDIC collects assessments from insured institutions pursuant to pursuant to section 7 of the Federal Deposit Insurance Act (''FDI Act''), 12 U.S.C. 1817(c), to assure that the Deposit Insurance Fund is adequately capitalized. The Certified Statement provides insured institutions with an accounting of the FDIC's assessment.

Request for Comment

Comments are invited on: (a) Whether the collection of information is necessary for the proper performance of the FDIC's functions, including whether the information has practical utility; (b) the accuracy of the estimates of the burden of the information collection, including the validity of the methodology and assumptions used; (c) ways to enhance the quality, utility, and clarity of the information to be collected; and (d) ways to minimize the burden of the information collection on respondents, including through the use of automated collection techniques or other forms of information technology. All comments will become a matter of public record.

Dated at Washington, DC, this 4th day of September, 2013.

Federal Deposit Insurance Corporation.

Robert E. Feldman,

Executive Secretary.

[FR Doc. 2013–21833 Filed 9–6–13; 8:45 am]

BILLING CODE 6714–01–P

FEDERAL TRADE COMMISSION

[File No. 122 3269]

Ganley Ford West, Inc.; Analysis of Proposed Consent Order To Aid Public Comment

AGENCY: Federal Trade Commission.

ACTION: Proposed Consent Agreement.

SUMMARY: The consent agreement in this matter settles alleged violations of federal law prohibiting unfair or deceptive acts or practices or unfair methods of competition. The attached Analysis to Aid Public Comment describes both the allegations in the draft complaint and the terms of the consent order—embodied in the consent agreement—that would settle these allegations.

DATES: Comments must be received on or before October 3, 2013.

ADDRESSES: Interested parties may file a comment at *https://ftcpublic.commentworks.com/ftc/ganleyfordwestincconsent* online or on paper, by following the instructions in the Request for Comment part of the **SUPPLEMENTARY INFORMATION** section below. Write ''Ganley Ford, File No. 122 3269'' on your comment and file your comment online at *https://ftcpublic.commentworks.com/ftc/ganleyfordwestincconsent* by following the instructions on the web-based form. If you prefer to file your comment on paper, mail or deliver your comment to the following address: Federal Trade Commission, Office of the Secretary, Room H–113 (Annex D), 600 Pennsylvania Avenue NW., Washington, DC 20580.

FOR FURTHER INFORMATION CONTACT: Michael Rose (216–263–3455), FTC, East Central Regional Office, 600 Pennsylvania Avenue NW., Washington, DC 20580.

SUPPLEMENTARY INFORMATION: Pursuant to Section 6(f) of the Federal Trade Commission Act, 15 U.S.C. 46(f), and FTC Rule 2.34, 16 CFR 2.34, notice is hereby given that the above-captioned consent agreement containing a consent order to cease and desist, having been filed with and accepted, subject to final approval, by the Commission, has been placed on the public record for a period of thirty (30) days. The following Analysis to Aid Public Comment describes the terms of the consent agreement, and the allegations in the complaint. An electronic copy of the full text of the consent agreement package can be obtained from the FTC Home Page (for September 3, 2013), on the World Wide Web, at *http://www.ftc.gov/os/actions.shtm.* A paper copy can be obtained from the FTC Public Reference Room, Room 130–H, 600 Pennsylvania Avenue NW., Washington, DC 20580, either in person or by calling (202) 326–2222.

You can file a comment online or on paper. For the Commission to consider your comment, we must receive it on or before October 3, 2013. Write ''Ganley Ford, File No. 122 3269'' on your comment. Your comment—including your name and your state—will be placed on the public record of this proceeding, including, to the extent practicable, on the public Commission Web site, at *http://www.ftc.gov/os/publiccomments.shtm.* As a matter of discretion, the Commission tries to remove individuals' home contact information from comments before placing them on the Commission Web site.

Because your comment will be made public, you are solely responsible for making sure that your comment does not include any sensitive personal information, like anyone's Social Security number, date of birth, driver's license number or other state identification number or foreign country equivalent, passport number, financial account number, or credit or debit card number. You are also solely responsible for making sure that your comment does not include any sensitive health information, like medical records or other individually identifiable health information. In addition, do not include any ''[t]rade secret or any commercial or financial information which . . . is privileged or confidential,'' as discussed in Section 6(f) of the FTC Act, 15 U.S.C. 46(f), and FTC Rule 4.10(a)(2), 16 CFR

4.10(a)(2). In particular, do not include competitively sensitive information such as costs, sales statistics, inventories, formulas, patterns, devices, manufacturing processes, or customer names.

If you want the Commission to give your comment confidential treatment, you must file it in paper form, with a request for confidential treatment, and you have to follow the procedure explained in FTC Rule 4.9(c), 16 CFR 4.9(c).[1] Your comment will be kept confidential only if the FTC General Counsel grants your request in accordance with the law and the public interest.

Postal mail addressed to the Commission is subject to delay due to heightened security screening. As a result, we encourage you to submit your comments online. To make sure that the Commission considers your online comment, you must file it at *https://ftcpublic.commentworks.com/ftc/ganleyfordwestincconsent* by following the instructions on the web-based form. If this Notice appears at *http://www.regulations.gov/#!home.* you also may file a comment through that Web site.

If you file your comment on paper, write ''Ganley Ford, File No. 122 3269'' on your comment and on the envelope, and mail or deliver it to the following address: Federal Trade Commission, Office of the Secretary, Room H–113 (Annex D), 600 Pennsylvania Avenue NW., Washington, DC 20580. If possible, submit your paper comment to the Commission by courier or overnight service.

Visit the Commission Web site at *http://www.ftc.gov* to read this Notice and the news release describing it. The FTC Act and other laws that the Commission administers permit the collection of public comments to consider and use in this proceeding as appropriate. The Commission will consider all timely and responsive public comments that it receives on or before October 3, 2013. You can find more information, including routine uses permitted by the Privacy Act, in the Commission's privacy policy, at *http://www.ftc.gov/ftc/privacy.htm.*

Analysis of Agreement Containing Consent Order To Aid Public Comment

The Federal Trade Commission (''FTC'') has accepted, subject to final approval, an agreement containing a consent order from Ganley Ford West, Inc. The proposed consent order has been placed on the public record for thirty (30) days for receipt of comments by interested persons. Comments received during this period will become part of the public record. After thirty (30) days, the FTC will again review the agreement and the comments received, and will decide whether it should withdraw from the agreement and take appropriate action or make final the agreement's proposed order.

The respondent is a motor vehicle dealer. According to the FTC complaint, respondent has advertised that particular Ford models are available at a specific dealer discount. The complaint alleges that, in fact, once consumers reach the dealership, they find out that respondent has failed to disclose that the specific discounts are only available for some, but not all, of the Ford models advertised. The failure to disclose this information could be materially misleading to consumers wishing to purchase one of the numerous other versions of the model. The complaint alleges, therefore, that the representations constitute deceptive acts or practices in violation of Section 5 of the FTC Act.

The proposed order is designed to prevent the respondent from engaging in similar deceptive practices in the future. Section I.A of the proposed consent order prohibits respondent from representing that a discount, rebate, bonus, incentive or price is available to consumers unless the representation clearly and conspicuously discloses all material qualifications or restrictions, if any, including but not limited to qualifications or restrictions on: (a) A consumer's ability to obtain the discount, rebate, bonus, incentive or price or (b) the vehicles available at the discount, rebate, bonus, incentive or price.

Section I.B. prohibits respondent from misrepresenting: (1) The existence or amount of any discount, rebate, bonus, incentive or price; (2) the existence, price, value, coverage, or features of any product or service; (3) the number of vehicles available at particular prices; or (4) any other material fact about the price, sale, financing, or leasing of motor vehicles.

Part II of the proposed order requires respondent to keep copies of relevant advertisements and materials substantiating claims made in the advertisements. Part III requires that respondent provide copies of the order to certain of its personnel. Part IV requires notification to the Commission regarding changes in corporate structure that might affect compliance obligations under the order. Part V requires the respondent to file compliance reports with the Commission. Finally, Part VI is a provision ''sunsetting'' the order after twenty (20) years, with certain exceptions.

The purpose of this analysis is to aid public comment on the proposed order. It is not intended to constitute an official interpretation of the complaint or proposed order, or to modify in any way the proposed order's terms.

By direction of the Commission.

Richard C. Donohue,

Acting Secretary.

[FR Doc. 2013–21863 Filed 9–6–13; 8:45 am]

BILLING CODE 6750–01–P

[1] In particular, the written request for confidential treatment that accompanies the comment must include the factual and legal basis for the request, and must identify the specific portions of the comment to be withheld from the public record. *See* FTC Rule 4.9(c), 16 CFR 4.9(c).

FEDERAL TRADE COMMISSION

[File No. 132 3014]

Timonium Chrysler, Inc. d/b/a Don White's Timonium Chrysler Jeep Dodge; Analysis of Proposed Consent Order To Aid Public Comment

AGENCY: Federal Trade Commission.

ACTION: Proposed Consent Agreement.

SUMMARY: The consent agreement in this matter settles alleged violations of federal law prohibiting unfair or deceptive acts or practices or unfair methods of competition. The attached Analysis to Aid Public Comment describes both the allegations in the draft complaint and the terms of the consent order—embodied in the consent agreement—that would settle these allegations.

DATES: Comments must be received on or before October 3, 2013.

ADDRESSES: Interested parties may file a comment at *https://ftcpublic.commentworks.com/ftc/timoniumchryslerincconsent* online or on paper, by following the instructions in the Request for Comment part of the **SUPPLEMENTARY INFORMATION** section below. Write ''Timonium Chrysler, File No. 132 3014'' on your comment and file your comment online at *https://ftcpublic.commentworks.com/ftc/timoniumchryslerincconsent* by following the instructions on the web-based form. If you prefer to file your comment on paper, mail or deliver your comment to the following address: Federal Trade Commission, Office of the Secretary, Room H–113 (Annex D), 600 Pennsylvania Avenue NW., Washington, DC 20580.

FOR FURTHER INFORMATION CONTACT: Teresa Kosmidis (202–326–3216), FTC, Bureau of Consumer Protection, 600 Pennsylvania Avenue NW., Washington, DC 20580.

SUPPLEMENTARY INFORMATION: Pursuant to Section 6(f) of the Federal Trade Commission Act, 15 U.S.C. 46(f), and FTC Rule 2.34, 16 CFR 2.34, notice is hereby given that the above-captioned consent agreement containing a consent order to cease and desist, having been filed with and accepted, subject to final approval, by the Commission, has been placed on the public record for a period of thirty (30) days. The following Analysis to Aid Public Comment describes the terms of the consent agreement, and the allegations in the complaint. An electronic copy of the full text of the consent agreement package can be obtained from the FTC Home Page (for September 3, 2013), on the World Wide Web, at *http://www.ftc.gov/os/actions.shtm.* A paper copy can be obtained from the FTC Public Reference Room, Room 130–H, 600 Pennsylvania Avenue NW., Washington, DC 20580, either in person or by calling (202) 326–2222.

You can file a comment online or on paper. For the Commission to consider your comment, we must receive it on or before October 3, 2013. Write ''Timonium Chrysler, File No. 132 3014'' on your comment. Your comment—including your name and your state—will be placed on the public record of this proceeding, including, to the extent practicable, on the public Commission Web site, at *http://www.ftc.gov/os/publiccomments.shtm.* As a matter of discretion, the Commission tries to remove individuals' home contact information from comments before placing them on the Commission Web site.

Because your comment will be made public, you are solely responsible for making sure that your comment does not include any sensitive personal information, like anyone's Social Security number, date of birth, driver's license number or other state identification number or foreign country equivalent, passport number, financial account number, or credit or debit card number. You are also solely responsible for making sure that your comment does not include any sensitive health information, like medical records or other individually identifiable health information. In addition, do not include any ''[t]rade secret or any commercial or financial information which . . . is privileged or confidential,'' as discussed in Section 6(f) of the FTC Act, 15 U.S.C. 46(f), and FTC Rule 4.10(a)(2), 16 CFR 4.10(a)(2). In particular, do not include competitively sensitive information such as costs, sales statistics, inventories, formulas, patterns, devices, manufacturing processes, or customer names.

If you want the Commission to give your comment confidential treatment, you must file it in paper form, with a request for confidential treatment, and you have to follow the procedure explained in FTC Rule 4.9(c), 16 CFR 4.9(c).[1] Your comment will be kept confidential only if the FTC General Counsel grants your request in accordance with the law and the public interest.

Postal mail addressed to the Commission is subject to delay due to heightened security screening. As a result, we encourage you to submit your comments online. To make sure that the Commission considers your online comment, you must file it at *https://ftcpublic.commentworks.com/ftc/timoniumchryslerincconsent* by following the instructions on the web-based form. If this Notice appears at *http://www.regulations.gov/#!home.* you also may file a comment through that Web site.

If you file your comment on paper, write ''Timonium Chrysler, File No. 132 3014'' on your comment and on the envelope, and mail or deliver it to the following address: Federal Trade Commission, Office of the Secretary, Room H–113 (Annex D), 600 Pennsylvania Avenue NW., Washington, DC 20580. If possible, submit your paper comment to the Commission by courier or overnight service.

Visit the Commission Web site at *http://www.ftc.gov* to read this Notice and the news release describing it. The FTC Act and other laws that the Commission administers permit the collection of public comments to consider and use in this proceeding as appropriate. The Commission will consider all timely and responsive public comments that it receives on or before October 3, 2013. You can find more information, including routine uses permitted by the Privacy Act, in the Commission's privacy policy, at *http://www.ftc.gov/ftc/privacy.htm.*

Analysis of Agreement Containing Consent Order To Aid Public Comment

The Federal Trade Commission (''FTC'') has accepted, subject to final approval, an agreement containing a consent order from Timonium Chrysler, Inc. d/b/a Don White's Timonium Chrysler Jeep Dodge. The proposed consent order has been placed on the public record for thirty (30) days for receipt of comments by interested persons. Comments received during this period will become part of the public record. After thirty (30) days, the FTC will again review the agreement and the comments received, and will decide whether it should withdraw from the agreement and take appropriate action or make final the agreement's proposed order.

The respondent is a motor vehicle dealer. According to the FTC complaint, respondent has advertised that specific dealer discounts and prices are generally available to consumers. The complaint alleges that, in fact, once consumers reach the dealership, they find out that there are significant restrictions on obtaining the advertised discounts or that the advertised discounts are not available in full. The complaint alleges therefore that the respondent's representations are false or misleading in violation of Section 5 of the FTC Act.

The proposed order is designed to prevent the respondent from engaging in similar deceptive practices in the future. Section I.A of the proposed consent order prohibits respondent from representing that a discount, rebate, bonus, incentive or price is available to consumers unless the representation clearly and conspicuously discloses all material qualifications or restrictions, if any, including but not limited to qualifications or restrictions on: (a) a consumer's ability to obtain the discount, rebate, bonus, incentive or price and (b) the vehicles available at the discount, rebate, bonus, incentive or price.

Section I.B. prohibits respondent from misrepresenting: (1) the existence or amount of any discount, rebate, bonus, incentive or price; (2) the existence, price, value, coverage, or features of any product or service associated with the motor vehicle purchase; (3) the number of vehicles available at particular prices; or (4) any other material fact about the price, sale, financing, or leasing of motor vehicles.

Part II of the proposed order requires respondent to keep copies of relevant advertisements and materials substantiating claims made in the advertisements. Part III requires that respondent provide copies of the order to certain of its personnel. Part IV requires notification to the Commission regarding changes in corporate structure that might affect compliance obligations under the order. Part V requires the respondent to file compliance reports with the Commission. Finally, Part VI is a provision ''sunsetting'' the order after twenty (20) years, with certain exceptions.

[1] In particular, the written request for confidential treatment that accompanies the comment must include the factual and legal basis for the request, and must identify the specific portions of the comment to be withheld from the public record. *See* FTC Rule 4.9(c), 16 CFR 4.9(c).

The purpose of this analysis is to aid public comment on the proposed order. It is not intended to constitute an official interpretation of the complaint or proposed order, or to modify in any way the proposed order's terms.

By direction of the Commission.

Richard C. Donohue,

Acting Secretary.

[FR Doc. 2013–21864 Filed 9–6–13; 8:45 am]

BILLING CODE 6750–01–P

GENERAL SERVICES ADMINISTRATION

[Notice-MK–2013–08; Docket No. 2013–0002; Sequence 27]

The Presidential Commission on Election Administration (PCEA); Upcoming Public Advisory Meetings

AGENCY: Office of Government-wide Policy, U.S. General Services Administration (GSA).

ACTION: Meeting notice.

SUMMARY: The Presidential Commission on Election Administration (PCEA), a Federal Advisory Committee established in accordance with the Federal Advisory Committee Act (FACA), 5 U.S.C., App., and Executive Order 13639, as amended by EO 13644, will hold meetings open to the public on Thursday, September 19, 2013 and Friday, September 20, 2013.

DATES: *Meeting date:* The meetings will be held on Thursday, September 19, 2013 and Friday, September 20, 2013, beginning at 8:00 a.m. Eastern Time on the 19th and ending at 4:30, and beginning at 8:30 a.m. on the 20th and ending no later than 6:00 p.m.

FOR FURTHER INFORMATION CONTACT: Mr. Mark Nejbauer, Designated Federal Officer, General Services Administration, Presidential Commission on Election Administration, 1776 G Street NW., Washington, DC 20006, email *mark.nejbauer@supportthevoter.gov.*

SUPPLEMENTARY INFORMATION:

Background: The PCEA was established to identify best practices and make recommendations to the President on the efficient administration of elections in order to ensure that all eligible voters have the opportunity to cast their ballots without undue delay, and to improve the experience of voters facing other obstacles in casting their ballots.

Agenda: The purpose of these meetings is for the PCEA to receive information to assist its members in collecting information and data relevant to its deliberations on the subjects set forth in Executive Order 13639, as amended. The agendas will be as follows:

For September 19th:

- Exhibits of voting equipment.
- Presentation by voting equipment manufacturers and designers on the future of voting technology.
- Testimony by state and country election officials on the future of voting technology.
- Testimony by technologists and standards experts on the future of voting technology.

For September 20th:

- Testimony by state, county and local election officials.
- Receipt of reports by experts in some of the subject areas detailed in Executive Order 13639.
- Testimony by interested members of the public.

Meeting Access: The PCEA will convene its meetings in the Duke Energy Convention Center—Jr. Ballroom C&D, 525 Elm St. Cincinnati, Ohio 45202. This site is accessible to individuals with disabilities. The meetings may also be webcast or made available via audio link. Please refer to PCEA's Web site, *http://www.supportthevoter.gov,* for the most up-to-date meeting agenda and access information.

Attendance at the Meeting: Individuals interested in attending the meetings must register in advance because of limited space. Please contact Mr. Nejbauer at the email address above to register to attend either or both of these meetings and obtain meeting materials. Materials may also be accessed online at *http://www.supportthevoter.gov.* To attend these meetings, please submit your full name, organization, email address, and phone number to Mark Nejbauer by 5:00 p.m. Eastern Time on Monday, September 16, 2013. Detailed meeting minutes will be posted within 90 days of the meeting.

Procedures for Providing Public Comments: In general, public comments will be posted on the PCEA Web site (see above). All comments, including attachments and other supporting materials, received are part of the public record and subject to public disclosure. Any comments submitted in connection with the PCEA meetings will be made available to the public under the provisions of the Federal Advisory Committee Act.

Contact Mark Nejbauer at *mark.nejbauer@supportthevoter.gov* to register to comment during the meeting's public comment period on September 20th. Registered speakers will be allowed a maximum of 3 minutes each due to limited time for individual testimony. Written copies providing expanded explanations of witnesses' presentations are encouraged.

The public is invited to submit written comments for the September 20, 2013, meeting until 5:00 p.m. Eastern Time on Monday, September 16, 2013, by either of the following methods:

Electronic or Paper Statements: Submit electronic statements to Mr. Nejbauer, Designated Federal Officer at *mark.nejbauer@supportthevoter.gov;* or send three (3) copies of any written statements to Mr. Nejbauer at the PCEA GSA address above. Written testimony not received by 5:00 p.m. Eastern Time on September 16th may be submitted but will not be considered at the September 20th meeting.

Dated: August 29, 2013.

Anne Rung,

Associate Administrator, Office of Government-wide Policy, General Services Administration.

[FR Doc. 2013–21802 Filed 9–6–13; 8:45 am]

BILLING CODE 6820–14–P

OFFICE OF GOVERNMENT ETHICS

Agency Information Collection Activities; Proposed Collection; Comment Request for a Modified OGE Form 278 Executive Branch Personnel Public Financial Disclosure Report

AGENCY: Office of Government Ethics (OGE).

ACTION: Notice of request for agency and public comments.

SUMMARY: After publication of this first round notice and public comment period, OGE intends to submit a modified OGE Form 278 Executive Branch Personnel Public Financial Disclosure Report to the Office of Management and Budget (OMB) for review and approval of a three-year extension under the Paperwork Reduction Act of 1995 (44 U.S.C. chapter 35).

DATES: Written comments by the public and the agencies on this proposed extension are invited and must be received on or before November 8, 2013.

ADDRESSES: You may submit comments to OGE on this paperwork notice by any of the following methods:

Email: usoge@oge.gov (Include reference to ''OGE Form 278 paperwork comment'' in the subject line of the message).

FAX: 202–482–9237.

Mail, Hand Delivery/Courier: Office of Government Ethics, Suite 500, 1201 New York Avenue NW., Washington,

DC 20005–3917, Attention: Paul D. Ledvina, Agency Clearance Officer.

FOR FURTHER INFORMATION CONTACT: Mr. Ledvina at the Office of Government Ethics; telephone: 202–482–9247; TTY: 800–877–8339; FAX: 202–482–9237; Email: *paul.ledvina@oge.gov*. An electronic copy of the OGE Form 278 is available in the Forms Library section of OGE's Web site at *http://www.oge.gov*. A paper copy may also be obtained, without charge, by contacting Mr. Ledvina.

SUPPLEMENTARY INFORMATION:

Title: Executive Branch Personnel Public Financial Disclosure Report.

Form Number: OGE Form 278.

OMB Control Number: 3209–0001.

Type of Information Collection: Extension with modifications of a currently approved collection.

Type of Review Request: Regular.

Respondents: Private citizen Presidential nominees to executive branch positions subject to Senate confirmation; other private citizens who are potential (incoming) Federal employees whose positions are designated for public disclosure filing; those who file termination reports from such positions after their Government service ends; and Presidential and Vice-Presidential candidates.

Estimated Annual Number of Respondents: 1,394.

Estimated Time per Response: 3 hours.

Estimated Total Annual Burden: 4,182 hours.

Abstract: The OGE Form 278 collects information from certain officers and high-level employees in the executive branch for conflicts of interest review and public disclosure. The form is also completed by individuals who are nominated by the President for high-level executive branch positions requiring Senate confirmation and new entrants to other public reporting positions in the executive branch. The financial information collected relates to: assets and income; transactions; gifts, reimbursements and travel expenses; liabilities; agreements or arrangements; outside positions; and compensation over $5,000 paid by a source—all subject to various reporting thresholds and exclusions. The information is collected in accordance with section 102 of the Ethics in Government Act, 5 U.S.C. app. section 102, as amended by the Stop Trading on Congressional Knowledge Act of 2012 (Pub. L. 112–105) (STOCK Act), and OGE's implementing financial disclosure regulations at 5 CFR part 2634. OGE is proposing to make minor modifications to the paper version of the OGE Form 278 to update the Privacy Act Statement and the legal authorities under which the information is collected. OGE proposes to include in this renewal submission the new OGE Form 278e, an electronic version to be implemented in January 2014, pursuant to the e-filing system mandated under section 11(b) of the STOCK Act. (See Amendments to the STOCK Act Pub. L. 113–7 (April 15, 2013)). The OGE Form 278e will collect the same information that both the current paper version of the OGE Form 278 collects, as well as the 14 e-filing systems that are currently in use in executive branch agencies. Although the OGE Form 278e will not collect any additional information, the application will produce a streamlined output report format that presents only the filer's inputs in given categories, and that does not report other categories not selected by the filer.

Request for Comments: Agency and public comment is invited specifically on the need for and practical utility of this information collection, the accuracy of OGE's burden estimate, the enhancement of quality, utility and clarity of the information collected, and the minimization of burden (including the use of information technology). Comments received in response to this notice will be summarized for, and may be included with, the OGE request for extension of OMB paperwork approval. The comments will also become a matter of public record.

Approved: August 30, 2013.

Walter M. Shaub, Jr.,

Director, Office of Government Ethics.

[FR Doc. 2013–21798 Filed 9–6–13; 8:45 am]

BILLING CODE 6345–03–P

DEPARTMENT OF HEALTH AND HUMAN SERVICES

Administration for Children and Families

Office of Refugee Resettlement

[CFDA Number 93.583]

Announcement of the Award of a Single-Source Program Expansion Supplement Grant to Massachusetts Office for Refugees and Immigrants in Boston, MA

AGENCY: Office of Refugee Resettlement, ACF, HHS.

ACTION: Announcement of the award of a single-source program expansion supplement grant to Massachusetts Office for Refugees and Immigrants to provide refugee cash assistance to an increased number of clients.

SUMMARY: The Administration for Children and Families (ACF), Office of Refugee Resettlement (ORR) announces the award of a single-source program expansion supplement grant to Massachusetts Office for Refugees and Immigrants, Boston, MA, in the amount of $325,000 under the Wilson-Fish Program. The supplemental award will allow the grantee to provide refugee cash assistance (RCA) to arriving refugees and others who are also eligible for refugee benefits through the remainder of the current budget period. The expansion supplement award will enable the grantee to provide assistance to a higher number of clients than originally planned. RCA is provided to clients for up to 8 months upon arrival to the U.S. who are categorically ineligible to receive cash assistance through the State TANF program but otherwise meet the program's financial eligibility requirements.

DATES: September 30, 2012 through September 29, 2013.

CONTACT FOR FURTHER INFORMATION: Carl Rubenstein, Wilson-Fish Coordinator, Office of Refugee Resettlement, Aerospace Building, 8th Floor West, 901 D Street SW., Washington, DC 20447. Telephone: 202–205–5933 Email: *carl.rubenstein@acf.hhs.gov*

SUPPLEMENTARY INFORMATION: The Wilson-Fish program is intended to be an alternative to the traditional State administered refugee assistance program for providing integrated assistance (cash and medical) and services (employment, case-management, ESL and other social services) to refugees, asylees, Amerasian Immigrants, Cuban and Haitian Entrants, Trafficking Victims and Iraqi/Afghani Special Immigrant Visa holders in order to increase their prospects for early employment and self-sufficiency, reduce their level of welfare dependence and promote coordination among voluntary resettlement agencies and service providers. In addition, the Wilson-Fish program enables ORR to ensure that refugee assistance programs exist in every State where refugees are resettled.

Statutory Authority: The Refugee Act of 1980 as amended, Wilson-Fish Amendment, Pub. L. 98–473, 8 U.S.C. 1522(e)(7); section 412(e)(7)(A) of the Immigration and Nationality Act.

Eskinder Negash,

Director, Office of Refugee Resettlement.

[FR Doc. 2013–21811 Filed 9–6–13; 8:45 am]

BILLING CODE 4184–46–P

DEPARTMENT OF HEALTH AND HUMAN SERVICES

Administration for Children and Families

[CFDA Number: 93.293]

Announcing the Award of a Single-Source Cooperative Agreement to the American Public Human Services Association for the Association of Administrators of the Interstate Compact on the Placement of Children (AAICPC) in Washington, DC

AGENCY: Children's Bureau, Administration on Children, Youth and Families, ACF, HHS.

ACTION: Notice of the award of a single-source cooperative agreement to the American Public Human Services Association to support the development and implementation of a national inter-jurisdictional Interstate Compact on the Placement of Children (ICPC) electronic system.

SUMMARY: The Administration for Children and Families (ACF), Administration on Children, Youth and Families (ACYF), Children's Bureau (CB), Division of Capacity Building announces the award of a single-source cooperative agreement in the amount of $1,250,000 to the American Public Human Services Association for its affiliate the Association of Administrators of the Interstate Compact on the Placement of Children (AAICPC), Washington, DC, for the development and implementation of an inter-jurisdictional electronic system to improve administrative efficiency in the interstate process of the ICPC. The ICPC ensures safe and suitable interstate placements for children in foster care.

Award funds will support the development and implementation of a national inter-jurisdictional Interstate Compact on the Placement of Children (ICPC) electronic system to improve administrative efficiency in the interstate process via the ICPC.

This pilot, ''Supporting Permanent Placement of Foster Care Children Through Electronic Records Exchange,'' implements real-time, on-line data exchange for States to share records and other information to support permanent placements of foster care children in homes across state lines. The Association of Administrators of the Interstate Compact on the Placement of Children (AAICPC) has identified current paper-based processes as causing excessive delays. Children may wait an unnecessarily long time for the paperwork for placement in a permanent home to be executed manually. The pilot will test whether an automated system reduces the time to process such cross-state exchanges to determine whether a placement is safe and suitable.

The pilot evaluation will measure timeliness of communication, expeditious exchange of case documentation and similar immediate outcomes as well as utilization and adherence to streamlined ICPC processes. Additional questions, such as those related to the permanency of child placements and the associated savings, may be addressed if it is feasible to do so within the project period. Results, which will be included in a final public report, will inform further adoption of the system across states.

The initial pilot will include at least 5 states and ultimately, beyond the pilot period, the system will be used by all 50 states, the District of Columbia and the U.S. Virgin Islands (ICPC Compact Members). The system will serve and benefit children, families, the public, private and tribal child welfare agencies nationwide and other multidisciplinary groups that work in support of the and throughout the child placement continuum.

DATES: The 17 month period of support for this award is September 30, 2013 through February 28, 2015.

FOR FURTHER INFORMATION CONTACT: June Dorn, National Adoption Specialist, Division of Capacity Building, 1250 Maryland Avenue SW., Suite 8150, Washington, DC 20024. Telephone: 202–205–9540; Email: *June.Dorn@acf.hhs.gov.*

SUPPLEMENTARY INFORMATION: The Partnership Fund, administered by the Office of Management and Budget (OMB), supports pilot projects that test improvements in how Federal assistance programs are administered. The pilot projects address the four goals of improving service delivery, improving payment accuracy, improving administrative efficiency and reducing barriers to access for eligible people. Using $32.5 million appropriation, the Partnership Fund allows Federal, state, and local government agencies to pilot innovative ideas in a controlled environment. Pilot projects funded by the Partnership Fund address Federal assistance programs that have a substantial State role in eligibility determination or administration, or where Federal-State cooperation could otherwise be beneficial. Ideas for pilots are developed through a collaborative process involving Federal, state, local, and private stakeholders. The OMB consults with a Federal Steering Committee to select pilots for funding. Funds are then transferred to lead Federal agencies, which in turn select states and localities to implement each pilot. Based on careful evaluation, successful pilots serve as models for other states and agencies and inform future policy decisions by the Administration and Congress.

Statutory Authority: The transfer of funding from the Partnership Fund for Program Integrity Innovation by the OMB to Federal agencies is authorized by the Consolidated Appropriations Act, 2010 (Pub. L. 111–117) and the Consolidated Appropriations Act, 2012 (Pub. L. 112–74)

Joseph Bock,

Associate Acting Commissioner, Administration on Children, Youth and Families.

[FR Doc. 2013–21755 Filed 9–6–13; 8:45 am]

BILLING CODE 4184–01–P

DEPARTMENT OF HEALTH AND HUMAN SERVICES

Food and Drug Administration

[Docket No. FDA–2013–N–0001]

Circulatory System Devices Panel of the Medical Devices Advisory Committee; Notice of Meeting

AGENCY: Food and Drug Administration, HHS.

ACTION: Notice.

This notice announces a forthcoming meeting of a public advisory committee of the Food and Drug Administration (FDA). The meeting will be open to the public.

Name of Committee: Circulatory System Devices Panel of the Medical Devices Advisory Committee.

General Function of the Committee: To provide advice and recommendations to the Agency on FDA's regulatory issues.

Date and Time: The meeting will be held on October 8 and 9, 2013, from 8 a.m. to 6 p.m.

Location: Hilton Washington DC North/Gaithersburg, Salons A, B, C, and D, 620 Perry Pkwy., Gaithersburg, MD 20877. The hotel's telephone number is 301–977–8900.

Contact Person: Jamie Waterhouse, Center for Devices and Radiological Health, Food and Drug Administration, 10903 New Hampshire Ave., Silver Spring, MD 20993, 301–796–3063, or FDA Advisory Committee Information Line, 1–800–741–8138 (301–443–0572 in the Washington, DC area). A notice in the **Federal Register** about last minute modifications that impact a previously

announced advisory committee meeting cannot always be published quickly enough to provide timely notice. Therefore, you should always check the Agency's Web site at *http://www.fda.gov/AdvisoryCommittees/default.htm* and scroll down to the appropriate advisory committee meeting link, or call the advisory committee information line to learn about possible modifications before coming to the meeting.

Agenda: On both days the committee will discuss, make recommendations, and vote on devices indicated for use in patients with heart failure (HF). On October 8, 2013, the committee will discuss, make recommendations, and vote on information related to the premarket approval application regarding the expansion of indications supported by the BLOCK HF trial to apply to all market-approved Medtronic Cardiac Resynchronization Therapy-Pacemaker (CRT–P) and Cardiac Resynchronization Therapy-Defibrillator (CRT–D) devices. The devices are pulse generators either without (CRT–P) or with (CRT–D) defibrillation capabilities. The devices require the implantation of at least a right ventricular (RV) and a left ventricular (LV) lead for sensing and pacing functionality. The RV lead used with a CRT–D device also has the capability to deliver high voltage energy. The implantation of a right atrial (RA) lead is left to the discretion of the clinician for both devices.

The requested expansion in indications for use was studied under the BLOCK HF trial. The trial was a prospective, multisite, randomized, double-blinded, parallel-controlled investigational device exemption (IDE) study. The primary objective of the trial was to demonstrate that the time until the first event of all-cause mortality, heart-failure-related urgent care, or a significant increase in left ventricular end systolic volume index (LVESVI) for subjects programmed to biventricular pacing is superior to that of subjects programmed to right ventricular pacing.

On October 9, 2013, the committee will discuss, make recommendations, and vote on information related to the premarket approval application for CardioMEMS, Inc. Champion™ HF Monitoring System. The CardioMEMS HF System is a permanently implantable pressure measurement system designed to provide daily pulmonary arterial pressure measurements including systolic, diastolic, and mean pulmonary arterial (PA) pressure. These measurements are used to guide treatment of congestive heart failure. The system consists of the following:

Implantable Sensor—The Pressure Sensor consists of a three-dimensional coil and pressure-sensitive capacitor encased between two wafers of fused silica. The coil (inductor) electromagnetically couples to the Sensor and allows the remote measurement of the resonant frequency of the inductive/capacitive (LC) circuit. This allows for wireless communication with the Sensor and eliminates the need for an onboard source of energy, such as a battery.

Delivery System—The Delivery System allows the placement of the Pressure Sensor within the distal pulmonary artery. There are two versions of the Delivery System. The first includes a hydrophilic coating on the distal portion of the catheter shaft and the second has no coating on the catheter shaft. Both delivery catheters are compatible with a guidewire. The Delivery System (with HF Sensor) is introduced over a guidewire through a sheath. Tether wires connect the Sensor to the Delivery System until the physician determines that the Sensor is properly positioned within the distal pulmonary artery. Once the Sensor is in position, the tether wires are withdrawn, releasing the Sensor.

Electronics Unit (Interrogator) and database—The Electronics Unit contains hardware and software to acquire and process signals from the sensor, provides a system interface for both patients and clinicians, and transfers PA measurements to a database for review by medical professionals. The database is a Web-based server that contains software, which receives data transmitted from the electronics unit, and presents the data for review by medical professionals.

FDA intends to make background material available to the public no later than 2 business days before the meeting. If FDA is unable to post the background material on its Web site prior to the meeting, the background material will be made publicly available at the location of the advisory committee meeting, and the background material will be posted on FDA's Web site after the meeting. Background material is available at *http://www.fda.gov/AdvisoryCommittees/Calendar/default.htm.* Scroll down to the appropriate advisory committee meeting link.

Procedure: Interested persons may present data, information, or views, orally or in writing, on issues pending before the committee. Written submissions may be made to the contact person on or before September 24, 2013. On October 8 and 9, 2013, oral presentations from the public will be scheduled between approximately 1 p.m. and 2 p.m. Those individuals interested in making formal oral presentations should notify the contact person and submit a brief statement of the general nature of the evidence or arguments they wish to present, the names and addresses of proposed participants, and an indication of the approximate time requested to make their presentation on or before September 16, 2013. Time allotted for each presentation may be limited. If the number of registrants requesting to speak is greater than can be reasonably accommodated during the scheduled open public hearing session, FDA may conduct a lottery to determine the speakers for the scheduled open public hearing session. The contact person will notify interested persons regarding their request to speak by September 18, 2013.

Persons attending FDA's advisory committee meetings are advised that the Agency is not responsible for providing access to electrical outlets.

FDA welcomes the attendance of the public at its advisory committee meetings and will make every effort to accommodate persons with physical disabilities or special needs. If you require special accommodations due to a disability, please contact AnnMarie Williams, Conference Management Staff, at *AnnMarie.Williams@fda.hhs.gov* or 301–796–5966 at least 7 days in advance of the meeting.

FDA is committed to the orderly conduct of its advisory committee meetings. Please visit our Web site at *http://www.fda.gov/AdvisoryCommittees/AboutAdvisoryCommittees/ucm111462.htm* for procedures on public conduct during advisory committee meetings.

Notice of this meeting is given under the Federal Advisory Committee Act (5 U.S.C. app. 2).

Dated: September 4, 2013.

Jill Hartzler Warner,

Acting Associate Commissioner for Special Medical Programs.

[FR Doc. 2013–21827 Filed 9–6–13; 8:45 am]

BILLING CODE 4160–01–P

DEPARTMENT OF HEALTH AND HUMAN SERVICES

National Institutes of Health

Submission for OMB Review; 30-day Comment Request; Genomics and Society Public Surveys in Conjunction With Smithsonian Museum of Natural History Genome Exhibit

SUMMARY: Under the provisions of Section 3507(a)(1)(D) of the Paperwork Reduction Act of 1995, the National Institutes of Health (NIH) has submitted to the Office of Management and Budget (OMB) a request for review and approval of the information collection listed below. This proposed information collection was previously published in the **Federal Register** on April 25, 2013, pages 24427–24428 and allowed 60-days for public comment. No public comments were received. The purpose of this notice is to allow an additional 30 days for public comment. The National Human Genome Research Institute (NHGRI), National Institutes of Health, may not conduct or sponsor, and the respondent is not required to respond to, an information collection that has been extended, revised, or implemented on or after October 1, 1995, unless it displays a currently valid OMB control number.

Direct Comments to OMB: Written comments and/or suggestions regarding the items contained in this notice, especially regarding the estimated public burden and associated response time, should be directed to the: Office of Management and Budget, Office of Regulatory Affairs, *OIRA_submission@omb.eop.gov* or by fax to 202–395–6974, Attention: NIH Desk Officer.

DATES: *Comment Due Date:* Comments regarding this information collection are best assured of having their full effect if received within 30 days of the date of this publication.

FOR FURTHER INFORMATION CONTACT: To obtain a copy of the data collection plans and instruments or request more information on the proposed project, contact: Laura M. Koehly, Ph.D., Senior Investigator, Social and Behavioral Research Branch, NHGRI, NIH, 31 Center Drive MSC 2073, Building 31, Room B1B54, Bethesda, MD 20892, or call non-toll-free number (301) 451–3999, or Email your request, including your address to: *koehlyl@mail.nih.gov.* Formal requests for additional plans and instruments must be requested in writing.

Proposed Collection: Genomics and Society Public Surveys in Conjunction with National Museum of Natural History Genome Exhibit, 0925—NEW, National Human Genome Research Institute (NHGRI), National Institutes of Health (NIH).

Need and Use of Information Collection: The National Human Genome Research Institute's (NHGRI) strategic plan puts a strong focus on understanding more fully the societal implications of recent genomic advances. Currently, there is limited knowledge about the public's view regarding genomics and society. The newly opened exhibit at the Smithsonian National Museum of Natural History, ''Genome: Unlocking Life's Code'', provides a unique opportunity to obtain the perspectives of the public about the role of genomics in society. Surveys included in this project consider a broad range of topics related to Genomics and Society, including the following content areas:

- Beliefs about the role of genomics in health conditions and associated risk factors;
- The role of friends, family, media, and health professionals in gathering and communicating health risk information;
- Implications of genetics knowledge in understanding self-concept, race and ancestry;
- Opinions regarding genetics knowledge necessary for making legal, health, and lifestyle decisions.

The exhibit opened in June, 2013, and will reside at the National Museum of Natural History for fourteen months after which it will travel across the country. Data collection for this project is anticipated to begin fall, 2013 and continue through the course of the exhibit, including the time in which it will travel to other cities across the country. Data collection will occur under the direction of the National Institutes of Health (NIH) National Human Genome Research Institute (NHGRI) in partnership with the Smithsonian Institute's National Museum of Natural History.

Adults (18+ years) will be recruited through the exhibit using two different approaches. First, displays within the exhibit will offer visitors the opportunity to text responses to questions related to genomics and genomic information. Respondents will be sent an automatic invitation to complete online surveys and a link to the Web site containing these surveys. Text message content will be collected by a third party short code texting service that will remove personal identifying information from the text message responses. Second, participants will also be recruited via a link to the surveys on the National Museum of Natural History's Web site. The URL for this survey site will also be advertised separately through media and social media channels.

The surveys will be available on a designated survey Web site hosted by the NHGRI. Visitors to the survey Web site can fill out the surveys if they choose. After completing an online consent confirming eligibility and a short demographic module, participants will be offered the option to complete one or more of the seven available surveys. In 2012, 7.6 million people visited the National Museum of Natural History. We estimate that our recruitment efforts will reach 3% of these visitors, 75% of whom will choose to complete one or more of the surveys. If these anticipated recruitment numbers are not met, a market research survey company may be used to recruit participants.

The data to be collected are primarily for research purposes; responses will be summarized and published in scientific journals as well as made available to the public through PubMed Central. Responses may also be used to inform community education programs sponsored by the NHGRI.

OMB approval is requested for 3 years. Three years will allow sufficient time to reach the anticipated sample size for this project, analyze the data, and disseminate the results. There are no costs to respondents other than their time. The total estimated annualized burden hours are 91,000.

ESTIMATED ANNUALIZED BURDEN HOURS

Survey name	Number of respondents	Number of responses per respondent	Average burden hours per response	Total annual burden hours requested
Text Responses	228,000	5	1/60	19,000
Survey: Map Your Social Network	30,000	1	35/60	17,500
Survey: Health and Genetics from YOUR Point of View	30,000	1	25/60	12,500

ESTIMATED ANNUALIZED BURDEN HOURS—Continued

Survey name	Number of respondents	Number of responses per respondent	Average burden hours per response	Total annual burden hours requested
Survey: Could Your Genes Predict Your Weight?	30,000	1	17/60	8,500
Survey: Kids, Genes, and Health	30,000	1	17/60	8,500
Survey: Celebrities, Prescription Drugs & Salmon	30,000	1	20/60	10,000
Survey: Will Genome Sequence Information Change How You View Yourself?	30,000	1	10/60	5,000
Survey: Exploring Our Identity: Genetics, Ancestry, and Race	30,000	1	20/60	10,000
Totals				91,000

Dated: July 15, 2013.

Gloria Butler,

Project Clearance Liaison, NHGRI, National Institutes of Health.

[FR Doc. 2013–21808 Filed 9–6–13; 8:45 am]

BILLING CODE 4140–01–P

DEPARTMENT OF HEALTH AND HUMAN SERVICES

National Institutes of Health

Proposed Collection; 60-day Comment Request; Data Collection To Understand How NIH Programs Apply Methodologies To Improve Their Research Programs (MIRP)

SUMMARY: In compliance with the requirement of Section 3506(c)(2)(A) of the Paperwork Reduction Act of 1995, for opportunity for public comment on proposed data collection projects, National Institute of Allergy and Infectious Diseases, National Institutes of Health (NIH), will publish periodic summaries of proposed projects to be submitted to the Office of Management and Budget (OMB) for review and approval.

Written comments and/or suggestions from the public and affected agencies are invited on one or more of the following points: (1) Whether the proposed collection of information is necessary for the proper performance of the function of the agency, including whether the information will have practical utility; (2) The accuracy of the agency's estimate of the burden of the proposed collection of information, including the validity of the methodology and assumptions used; (3) Ways to enhance the quality, utility, and clarity of the information to be collected; and (4) Ways to minimize the burden of the collection of information on those who are to respond, including the use of appropriate automated, electronic, mechanical, or other technological collection techniques or other forms of information technology.

To Submit Comments and for Further Information: To obtain a copy of the data collection plans and instruments, submit comments in writing, or request more information on the proposed project, contact: Ms. Dione Washington, Strategic Planning and Evaluation Branch, OSPIDA, NIAID, NIH, 6610 Rockledge Dr, Rm 2501 Bethesda, MD 20892–6620, or Email your request, including your address to *washingtondi@niaid.nih.gov*. Formal requests for additional plans and instruments must be requested in writing.

Comment Due Date: Comments regarding this information collection are best assured of having their full effect if received within 60 days of the date of this publication.

Proposed Collection: Data Collection to Understand How NIH Programs Apply Methodologies to Improve Their Research Programs (MIRP), 0925New, National Institute of Allergy and Infectious Diseases (NIAID), National Institutes of Health (NIH).

Need and Use of Information Collection: In this submission, NIAID is requesting an OMB generic clearance for formative research activities relating to the collection of data to assist the Institute in understanding the usefulness of a range of methodologies that are employed to increase organizational effectiveness. The Office of Management and Budget (OMB) and Office of Science and Technology Policy (OSTP) have instructed agencies to apply rigorous strategy management principles to ensure resources are directed at high-priority programs and avoid duplication of effort. A key aspect to ensuring resources dedicated to these programs are applied efficiently and effectively is to understand how NIH research programs apply methodologies to improve their organizational effectiveness. The degree of an organization's effectiveness is commonly recognized to be influenced by many factors. These can include the clarity of its purpose and strategy, how it allocates and structures its work, the processes used to carry out operations, the way technologies are used to support work, the people involved and their skills and abilities, the way relationships are managed with partners and stakeholders, and how leadership functions, particularly in terms of its ability to ensure that all the other components are aligned in supporting work towards the mission. Many methodologies are commonly employed in all sectors, including government, with the goal of increasing organizational effectiveness. Some examples of those used widely are strategic planning and strategy management, total quality management, change management, organizational assessment and intervention, organizational design, process improvement, leadership development, performance management, and workforce training and professional development, among others. There are many models and approaches to each of these methodologies. Each one can be implemented in a wide range of ways. Reflection on and learning from methodologies that have been used and the ways in which they have been employed is critical to continually ensuring that government functions effectively.

The primary use for information gathered through voluntary survey pilot testing, surveys, focus groups, interviews, and collaborative data interpretation meetings to understand the use of strategy management in research programs supported by the NIH. The information will improve approaches to implementing strategic management, which will lead to more efficient use of resources. Results gathered in these data will be used to enhance implementation of methodologies to improve organizational effectiveness. The main goal of this information is to improve program outcomes and increase the efficiency of resource utilization. The knowledge gained from these collections will be used to strengthen

the planning, implementation, and monitoring of NIH research programs, as well as to strengthen strategy management in NIH research programs.

The questions asked, and the data to be collected are rooted in established business-based paradigms but specifically adapted for use (and relevance) in a biomedical research environment, in order to discern: (1) Factors that enhance (or inhibit) organizational effectiveness in research programs; (2) utility and acceptance of these kinds of efforts among biomedical researchers and research stakeholders. The results from this formative research project will inform quality improvement activities in several areas, including goal setting, capability and resource evaluation, operational efficiency, and performance monitoring. Utilized data collection methodologies will be administered in a manner that minimizes public information collection burden. These include, but are not limited to, surveys, focus groups, and/or cognitive interviews. Separate and distinct generic clearances are requested to facilitate the efficiency of submission and review of these projects as required by the OMB Office of Information and Regulatory Affairs.

OMB approval is requested for 3 years. There are no costs to respondents other than their time. The total estimated annualized burden hours are 4775.

ESTIMATED ANNUALIZED BURDEN HOURS

Form name	Type of respondent	Number of respondents	Number of responses per respondent	Average burden per response (in hours)	Total annual burden hour
Pilot Test	Science professional, researchers, institutional officials, network leadership, program administrators, and research site staff.	900	1	45/60	675
Survey		2500	1	30/60	1250
Interview		1000	1	90/60	1500
Focus group		375	1	2/60	750
Data interpretation meeting with stakeholders.		150	1	4/60	600

Dated: August 22, 2013.

John McGowan,

Executive Officer (EO), OD, NIAID, NIH.

[FR Doc. 2013–21807 Filed 9–6–13; 8:45 am]

BILLING CODE 4140–01–P

DEPARTMENT OF HEALTH AND HUMAN SERVICES

National Institutes of Health

National Institute of Mental Health; Notice of Closed Meeting

Pursuant to section 10(d) of the Federal Advisory Committee Act, as amended (5 U.S.C. App.), notice is hereby given of the following meeting.

The meeting will be closed to the public in accordance with the provisions set forth in sections 552b(c)(4) and 552b(c)(6), Title 5 U.S.C., as amended. The grant applications and the discussions could disclose confidential trade secrets or commercial property such as patentable material, and personal information concerning individuals associated with the grant applications, the disclosure of which would constitute a clearly unwarranted invasion of personal privacy.

Name of Committee: National Institute of Mental Health Special Emphasis Panel; Mental Health Research Network II.

Date: September 30, 2013.

Time: 1:00 p.m. to 3:00 p.m.

Agenda: To review and evaluate grant applications.

Place: National Institutes of Health, Neuroscience Center, 6001 Executive Boulevard, Rockville, MD 20852, (Telephone Conference Call).

Contact Person: Marina Broitman, Ph.D., Scientific Review Officer, Division of Extramural Activities, National Institute of Mental Health, NIH Neuroscience Center, 6001 Executive Blvd., Room 6153, MSC 9608, Bethesda, MD 20892–9608, 301–402–8152, *mbroitma@mail.nih.gov.*

(Catalogue of Federal Domestic Assistance Program No. 93.242, Mental Health Research Grants, National Institutes of Health, HHS)

Dated: September 3, 2013.

Carolyn Baum,

Program Analyst, Office of Federal Advisory Committee Policy.

[FR Doc. 2013–21786 Filed 9–6–13; 8:45 am]

BILLING CODE 4140–01–P

DEPARTMENT OF HEALTH AND HUMAN SERVICES

National Institutes of Health

National Institute of Allergy and Infectious Diseases; Notice of Closed Meeting

Pursuant to section 10(d) of the Federal Advisory Committee Act, as amended (5 U.S.C. App.), notice is hereby given of the following meeting.

The meeting will be closed to the public in accordance with the provisions set forth in sections 552b(c)(4) and 552b(c)(6), Title 5 U.S.C., as amended. The contract proposals and the discussions could disclose confidential trade secrets or commercial property such as patentable material, and personal information concerning individuals associated with the contract proposals, the disclosure of which would constitute a clearly unwarranted invasion of personal privacy.

Name of Committee: National Institute of Allergy and Infectious Diseases Special Emphasis Panel; NIAID Peer Review Meeting.

Date: September 24, 2013.

Time: 12:30 p.m. to 5:30 p.m.

Agenda: To review and evaluate contract proposals.

Place: National Institutes of Health, 6700B Rockledge Drive, Bethesda, MD 20817, (Telephone Conference Call).

Contact Person: Richard W. Morris, Ph.D., Scientific Review Officer, Scientific Review Program, DEA/NIAID/NIH/DHHS, 6700–B Rockledge Drive, MSC–7616, Room 3251, Bethesda, MD 20892–7616, 301–451–2663, *rmorris@niaid.nih.gov.*

(Catalogue of Federal Domestic Assistance Program Nos. 93.855, Allergy, Immunology, and Transplantation Research; 93.856, Microbiology and Infectious Diseases Research, National Institutes of Health, HHS)

Dated: September 3, 2013.

David Clary,

Program Analyst, Office of Federal Advisory Committee Policy.

[FR Doc. 2013–21787 Filed 9–6–13; 8:45 am]

BILLING CODE 4140–01–P

DEPARTMENT OF HEALTH AND HUMAN SERVICES

National Institutes of Health

National Institute of Diabetes and Digestive and Kidney Diseases; Notice of Meeting

Pursuant to section 10(d) of the Federal Advisory Committee Act, as amended (5 U.S.C. App.), notice is hereby given of a meeting of the Board of Scientific Counselors, NIDDK.

The meeting will be open to the public as indicated below, with attendance limited to space available. Individuals who plan to attend and need special assistance, such as sign language interpretation or other reasonable accommodations, should notify the Contact Person listed below in advance of the meeting.

The meeting will be closed to the public as indicated below in accordance with the provisions set forth in section 552b(c)(6), Title 5 U.S.C., as amended for the review, discussion, and evaluation of individual intramural programs and projects conducted by the National Institute of Diabetes and Digestive and Kidney Diseases, including consideration of personnel qualifications and performance, and the competence of individual investigators, the disclosure of which would constitute a clearly unwarranted invasion of personal privacy.

Name of Committee: Board of Scientific Counselors, NIDDK.

Date: October 10–11, 2013.

Open: October 10, 2013, 8:00 a.m. to 8:30 a.m.

Agenda: Introductions and Overview.

Place: National Institutes of Health, Building 5, Room 127, 5 Memorial Drive, Bethesda, MD 20892.

Closed: October 10, 2013, 8:30 a.m. to 3:15 p.m.

Agenda: To review and evaluate personal qualifications and performance, and competence of individual investigators.

Place: National Institutes of Health, Building 5, Room 127, 5 Memorial Drive, Bethesda, MD 20892.

Closed: October 11, 2013, 8:30 a.m. to 3:15 p.m.

Agenda: To review and evaluate personal qualifications and performance, and competence of individual investigators.

Place: National Institutes of Health, Building 5, Room 127, 5 Memorial Drive, Bethesda, MD 20892.

Contact Person: MICHAEL W. KRAUSE, Ph.D., SCIENTIFIC DIRECTOR, NATIONAL INSTITUTE OF DIABETES AND DIGESTIVE AND KIDNEY DISEASES, NATIONAL INSTITUTE OF HEALTH, BUILDING 5, ROOM B104, Bethesda, MD 20892–1818, (301) 402–4633, *mwkrause@helix.nih.gov.*

(Catalogue of Federal Domestic Assistance Program Nos. 93.847, Diabetes, Endocrinology and Metabolic Research; 93.848, Digestive Diseases and Nutrition Research; 93.849, Kidney Diseases, Urology and Hematology Research, National Institutes of Health, HHS)

Dated: September 3, 2013.

David Clary,

Program Analyst, Office of Federal Advisory Committee Policy.

[FR Doc. 2013–21789 Filed 9–6–13; 8:45 am]

BILLING CODE 4140–01–P

DEPARTMENT OF HEALTH AND HUMAN SERVICES

National Institutes of Health

Center for Scientific Review; Notice of Closed Meetings

Pursuant to section 10(d) of the Federal Advisory Committee Act, as amended (5 U.S.C. App.), notice is hereby given of the following meetings.

The meetings will be closed to the public in accordance with the provisions set forth in sections 552b(c)(4) and 552b(c)(6), Title 5 U.S.C., as amended. The grant applications and the discussions could disclose confidential trade secrets or commercial property such as patentable material, and personal information concerning individuals associated with the grant applications, the disclosure of which would constitute a clearly unwarranted invasion of personal privacy.

Name of Committee: Immunology Integrated Review Group; Hypersensitivity, Autoimmune, and Immune-mediated Diseases Study Section.

Date: October 3–4, 2013.

Time: 8:00 a.m. to 5:00 p.m.

Agenda: To review and evaluate grant applications.

Place: Crystal City Marriott, 1999 Jefferson Davis Highway, Arlington, VA 22202.

Contact Person: Bahiru Gametchu, DVM, Ph.D., Scientific Review Officer, Center for Scientific Review, National Institutes of Health, 6701 Rockledge Drive, Room 4204, MSC 7812, Bethesda, MD 20892, 301–408–9329, *gametchb@csr.nih.gov.*

Name of Committee: Cardiovascular and Respiratory Sciences Integrated Review Group; Clinical and Integrative Cardiovascular Sciences Study Section.

Date: October 3, 2013.

Time: 8:00 a.m. to 6:00 p.m.

Agenda: To review and evaluate grant applications.

Place: Hotel Kabuki, 1625 Post Street, San Francisco, CA 94115.

Contact Person: Delvin R Knight, Ph.D., Scientific Review Officer, Center for Scientific Review, National Institutes of Health, 6701 Rockledge Drive, Room 6194 MSC 4128, Bethesda, MD 20892–7814, 301.435.1850, *knightdr@csr.nih.gov.*

Name of Committee: Emerging Technologies and Training Neurosciences Integrated Review Group; Bioengineering of Neuroscience, Vision and Low Vision Technologies Study Section.

Date: October 3–4, 2013.

Time: 8:00 a.m. to 11:00 a.m.

Agenda: To review and evaluate grant applications.

Place: Washington Hilton, 1919 Connecticut Avenue, Washington, DC 20009.

Contact Person: Robert C Elliott, Ph.D., Scientific Review Officer, Center for Scientific Review, National Institutes of Health, 6701 Rockledge Drive, Room 5190, MSC 7846, Bethesda, MD 20892, 301–435–3009, *elliotro@csr.nih.gov.*

Name of Committee: Biological Chemistry and Macromolecular Biophysics Integrated Review Group; Macromolecular Structure and Function A Study Section.

Date: October 3, 2013.

Time: 8:00 a.m. to 5:00 p.m.

Agenda: To review and evaluate grant applications.

Place: George Washington University Inn, 824 New Hampshire Avenue NW., Washington, DC 20037.

Contact Person: David R. Jollie, Ph.D., Scientific Review Officer, Center for Scientific Review, National Institutes of Health, 6701 Rockledge Drive, Room 4150, MSC 7806, Bethesda, MD 20892, (301)-435–1722, *jollieda@csr.nih.gov.*

Name of Committee: Bioengineering Sciences & Technologies Integrated Review Group; Biomaterials and Biointerfaces Study Section.

Date: October 3–4, 2013.

Time: 8:00 a.m. to 4:00 p.m.

Agenda: To review and evaluate grant applications.

Place: Residence Inn Arlington Capitol View; 2850 South Potomac Avenue, Arlington, VA 22202.

Contact Person: Joseph D Mosca, Ph.D., Scientific Review Officer, Center for Scientific Review, National Institutes of Health, 6701 Rockledge Drive, Room 5158, MSC 7808, Bethesda, MD 20892, (301) 408–9465, *moscajos@csr.nih.gov.*

Name of Committee: Molecular, Cellular and Developmental Neuroscience Integrated Review Group; Biophysics of Neural Systems Study Section.

Date: October 3, 2013.

Time: 8:00 a.m. to 7:00 p.m.

Agenda: To review and evaluate grant applications.

Place: Hotel Monaco, 2 North Charles Street, Baltimore, MD 21201.

Contact Person: Geoffrey G Schofield, Ph.D., Scientific Review Officer, Center for Scientific Review, National Institutes of Health, 6701 Rockledge Drive, Room 4040–A, MSC 7850, Bethesda, MD 20892, 301–435–1235, *geoffreys@csr.nih.gov.*

Name of Committee: Cell Biology Integrated Review Group; Cellular Mechanisms in Aging and Development Study Section.

Date: October 3–4, 2013.

Time: 8:00 a.m. to 6:00 p.m.

Agenda: To review and evaluate grant applications.

Place: Residence Inn Bethesda, 7335 Wisconsin Avenue, Bethesda, MD 20814.

Contact Person: John Burch, Ph.D., Scientific Review Officer, Center for Scientific Review, National Institute of Health, 6701 Rockledge Drive, Room 3213, MSC 7808, Bethesda, MD 20892, 301–408–9519, *burchjb@csr.nih.gov.*

Name of Committee: Biological Chemistry and Macromolecular Biophysics Integrated Review Group; Macromolecular Structure and Function C Study Section.

Date: October 3–4, 2013.

Time: 8:00 a.m. to 10:00 a.m.

Agenda: To review and evaluate grant applications.

Place: Washington Plaza Hotel, 10 Thomas Circle NW., Washington, DC 20005.

Contact Person: William A Greenberg, Ph.D., Scientific Review Officer, Center for Scientific Review, National Institutes of Health, 6701 Rockledge Drive, Room 4168, MSC 7806, Bethesda, MD 20892, (301) 435–1726, *greenbergwa@csr.nih.gov.*

Name of Committee: Risk, Prevention and Health Behavior Integrated Review Group; Behavioral Medicine, Interventions and Outcomes Study Section.

Date: October 3–4, 2013.

Time: 8:00 a.m. to 5:00 p.m.

Agenda: To review and evaluate grant applications.

Place: The Allerton Hotel, 701 North Michigan Avenue, Chicago, IL 60611.

Contact Person: Lee S Mann, Ph.D., Scientific Review Officer, Center for Scientific Review, National Institutes of Health, 6701 Rockledge Drive, Room 3186, MSC 7848, Bethesda, MD 20892, 301–435–0677, *mannl@csr.nih.gov.*

Name of Committee: Risk, Prevention and Health Behavior Integrated Review Group; Risk, Prevention and Intervention for Addictions Study Section.

Date: October 3–4, 2013.

Time: 8:00 a.m. to 5:30 p.m.

Agenda: To review and evaluate grant applications.

Place: Renaissance Mayflower Hotel, 1127 Connecticut Avenue NW., Washington, DC 20036.

Contact Person: Claire E Gutkin, Ph.D., Scientific Review Officer, Center for Scientific Review, National Institutes of Health, 6701 Rockledge Drive, Room 3106, MSC 7808, Bethesda, MD 20892, 301–594–3139, *gutkincl@csr.nih.gov.*

Name of Committee: Risk, Prevention and Health Behavior Integrated Review Group; Psychosocial Development, Risk and Prevention Study Section.

Date: October 3–4, 2013.

Time: 8:00 a.m. to 6:00 p.m.

Agenda: To review and evaluate grant applications.

Place: Bethesda North Marriott Hotel & Conference Center, 5701 Marinelli Road, Bethesda, MD 20852.

Contact Person: Anna L Riley, Ph.D., Scientific Review Officer, Center for Scientific Review, National Institutes of Health, 6701 Rockledge Drive, Room 3114, MSC 7759, Bethesda, MD 20892, 301–435–2889, *rileyann@csr.nih.gov.*

Name of Committee: Immunology Integrated Review Group; Innate Immunity and Inflammation Study Section.

Date: October 3–4, 2013.

Time: 8:00 a.m. to 5:00 p.m.

Agenda: To review and evaluate grant applications.

Place: Marriott Residence Inn National Harbor, 192 Waterfront Street, National Harbor, MD 20745.

Contact Person: Tina McIntyre, Ph.D., Scientific Review Officer, Center for Scientific Review, National Institutes of Health, 6701 Rockledge Drive, Room 4202, MSC 7812, Bethesda, MD 20892, 301–594–6375, *mcintyrt@csr.nih.gov.*

Name of Committee: Immunology Integrated Review Group; Transplantation, Tolerance, and Tumor Immunology Study Section.

Date: October 3–4, 2013.

Time: 8:30 a.m. to 12:00 p.m.

Agenda: To review and evaluate grant applications.

Place: Renaissance Washington DC, Dupont Circle, 1143 New Hampshire Avenue NW., Washington, DC 20037.

Contact Person: Jin Huang, Ph.D., Scientific Review Officer, Center for Scientific Review, National Institutes of Health, 6701 Rockledge Drive, Room 4199, MSC 7812, Bethesda, MD 20892, 301–435–1230, *jh377p@nih.gov.*

Name of Committee: Immunology Integrated Review Group; Cellular and Molecular Immunology—A Study Section.

Date: October 3–4, 2013.

Time: 8:00 p.m. to 5:00 p.m.

Agenda: To review and evaluate grant applications.

Place: Sir Francis Drake Hotel, 450 Powell Street at Sutter, San Francisco, CA 94102.

Contact Person: David B Winter, Ph.D., Scientific Review Officer, Center for Scientific Review, National Institutes of Health, 6701 Rockledge Drive, Room 4204, MSC 7812, Bethesda, MD 20892, 301–435–1152, *dwinter@mail.nih.gov.*

Name of Committee: Cardiovascular and Respiratory Sciences Integrated Review Group; Electrical Signaling, Ion Transport, and Arrhythmias Study Section.

Date: October 4, 2013.

Time: 8:00 a.m. to 6:00 p.m.

Agenda: To review and evaluate grant applications.

Place: Hotel Kabuki, 1625 Post Street, San Francisco, CA 94115.

Contact Person: Yuanna Cheng, MD, Ph.D., Scientific Review Officer, Center for Scientific Review, National Institutes of Health, 6701 Rockledge Drive, Room 4138, MSC 7814, Bethesda, MD 20892, (301)435–1195, *Chengy5@csr.nih.gov.*

Name of Committee: Digestive, Kidney and Urological Systems Integrated Review Group; Kidney Molecular Biology and Genitourinary Organ Development.

Date: October 4, 2013.

Time: 8:00 a.m. to 5:00 p.m.

Agenda: To review and evaluate grant applications.

Place: Hyatt Regency Bethesda, One Bethesda Metro Center, 7400 Wisconsin Avenue, Bethesda, MD 20814.

Contact Person: Ryan G Morris, Ph.D., Scientific Review Officer, Center for Scientific Review, National Institutes of Health, 6701 Rockledge Drive, Room 4205, MSC 7814, Bethesda, MD 20892, 301–435–1501, *morrisr@csr.nih.gov.*

Name of Committee: Center for Scientific Review Special Emphasis Panel; Shared Instrumentation: Neurotechnology.

Date: October 4, 2013

Time: 11:00 a.m. to 2:00 p.m.

Agenda: To review and evaluate grant applications.

Place: Washington Hilton, 1919 Connecticut Avenue NW., Washington, DC 20009.

Contact Person: Robert C Elliott, Ph.D., Scientific Review Officer, Center for Scientific Review, National Institutes of Health, 6701 Rockledge Drive, Room 3130, MSC 7850, Bethesda, MD 20892, 301–435–3009, *elliotro@csr.nih.gov.*

Name of Committee: Center for Scientific Review Special Emphasis Panel; PAR Panel: Neurotechnology and Low Vision Technology.

Date: October 4, 2013.

Time: 2:00 p.m. to 5:00 p.m.

Agenda: To review and evaluate grant applications.

Place: Washington Hilton, 1919 Connecticut Avenue NW., Washington, DC 20009.

Contact Person: Robert C Elliott, Ph.D., Scientific Review Officer, Center for Scientific Review, National Institutes of Health, 6701 Rockledge Drive, Room 3130, MSC 7850, Bethesda, MD 20892, 301–435–3009, *elliotro@csr.nih.gov.*

(Catalogue of Federal Domestic Assistance Program Nos. 93.306, Comparative Medicine; 93.333, Clinical Research, 93.306, 93.333, 93.337, 93.393–93.396, 93.837–93.844, 93.846–93.878, 93.892, 93.893, National Institutes of Health, HHS)

Dated: September 3, 2013.

Carolyn A. Baum,

Program Analyst, Office of Federal Advisory Committee Policy.

[FR Doc. 2013–21785 Filed 9–6–13; 8:45 am]

BILLING CODE 4140–01–P

DEPARTMENT OF HEALTH AND HUMAN SERVICES

National Institutes of Health

National Institute of Diabetes and Digestive and Kidney Diseases; Notice of Closed Meetings

Pursuant to section 10(d) of the Federal Advisory Committee Act, as amended (5 U.S.C. App.), notice is hereby given of the following meetings.

The meetings will be closed to the public in accordance with the provisions set forth in sections 552b(c)(4) and 552b(c)(6), Title 5 U.S.C., as amended. The grant applications and the discussions could disclose confidential trade secrets or commercial property such as patentable material, and personal information concerning individuals associated with the grant

applications, the disclosure of which would constitute a clearly unwarranted invasion of personal privacy.

Name of Committee: National Institute of Diabetes and Digestive and Kidney Diseases Special Emphasis Panel; DEM Fellowship Grant Applications Review.

Date: October 1–2, 2013.

Time: 8:00 a.m. to 5:00 p.m.

Agenda: To review and evaluate grant applications.

Place: The Melrose Hotel, 2430 Pennsylvania Avenue, Washington, DC 20037.

Contact Person: Carol J. Goter-Robinson, Ph.D., Scientific Review Officer, Review Branch, DEA, NIDDK, National Institutes of Health, Room 748, 6707 Democracy Boulevard, Bethesda, MD 20892–5452, (301) 594–7791, *goterrobinsonc@extra.niddk.nih.gov.*

Name of Committee: National Institute of Diabetes and Digestive and Kidney Diseases Special Emphasis Panel; The NIDDK–KUH Fellowship Review Committee.

Date: October 1, 2013.

Time: 9:00 a.m. to 1:00 p.m.

Agenda: To review and evaluate grant applications.

Place: National Institutes of Health, Two Democracy Plaza, 6707 Democracy Boulevard, Bethesda, MD 20892 (Telephone Conference Call).

Contact Person: Xiaodu Guo, MD, Ph.D., Scientific Review Officer, Review Branch, DEA, NIDDK, National Institutes of Health, Room 761, 6707 Democracy Boulevard, Bethesda, MD 20892–5452, (301) 594–4719, *guox@extra.niddk.nih.gov.*

Name of Committee: National Institute of Diabetes and Digestive and Kidney Diseases Special Emphasis Panel; NIDDK Ancillary Studies.

Date: October 2, 2013.

Time: 11:00 a.m. to 1:00 p.m.

Agenda: To review and evaluate grant applications.

Place: National Institutes of Health, Two Democracy Plaza, 6707 Democracy Boulevard, Bethesda, MD 20892 (Telephone Conference Call).

Contact Person: Elena Sanovich, Ph.D., Scientific Review Officer, Review Branch, DEA, NIDDK, National Institutes of Health, Room 750, 6707 Democracy Boulevard, Bethesda, MD 20892–2542, 301–594–8886, *sanoviche@mail.nih.gov.*

Name of Committee: National Institute of Diabetes and Digestive and Kidney Diseases Special Emphasis Panel; NIDDK R25 Telephone Review SEP.

Date: October 7, 2013.

Time: 1:00 p.m. to 4:00 p.m.

Agenda: To review and evaluate grant applications.

Place: National Institutes of Health, Two Democracy Plaza, 6707 Democracy Boulevard, Bethesda, MD 20892 (Telephone Conference Call).

Contact Person: Xiaodu Guo, MD, Ph.D., Scientific Review Officer, Review Branch, DEA, NIDDK, National Institutes of Health, Room 761, 6707 Democracy Boulevard, Bethesda, MD 20892–5452, (301) 594–4719, *guox@extra.niddk.nih.gov.*

Name of Committee: National Institute of Diabetes and Digestive and Kidney Diseases Special Emphasis Panel; NIDDK Ancillary Study in Liver Disease.

Date: October 28, 2013.

Time: 11:00 a.m. to 3:00 p.m.

Agenda: To review and evaluate grant applications.

Place: National Institutes of Health, Two Democracy Plaza, 6707 Democracy Boulevard, Bethesda, MD 20892 (Telephone Conference Call).

Contact Person: Jian Yang, Ph.D., Scientific Review Officer, Review Branch, DEA, NIDDK, National Institutes of Health, Room 755, 6707 Democracy Boulevard, Bethesda, MD 20892–5452, (301) 594–7799, *yangj@extra.niddk.nih.gov.*

(Catalogue of Federal Domestic Assistance Program Nos. 93.847, Diabetes, Endocrinology and Metabolic Research; 93.848, Digestive Diseases and Nutrition Research; 93.849, Kidney Diseases, Urology and Hematology Research, National Institutes of Health, HHS)

Dated: September 3, 2013.

David Clary,

Program Analyst, Office of Federal Advisory Committee Policy.

[FR Doc. 2013–21788 Filed 9–6–13; 8:45 am]

BILLING CODE 4140–01–P

DEPARTMENT OF HEALTH AND HUMAN SERVICES

National Institutes of Health

National Institute on Alcohol Abuse and Alcoholism; Notice of Closed Meeting

Pursuant to section 10(d) of the Federal Advisory Committee Act, as amended (5 U.S.C. App.), notice is hereby given of the following meeting.

The meeting will be closed to the public in accordance with the provisions set forth in sections 552b(c)(4) and 552b(c)(6), Title 5 U.S.C., as amended. The grant applications and the discussions could disclose confidential trade secrets or commercial property such as patentable material, and personal information concerning individuals associated with the grant applications, the disclosure of which would constitute a clearly unwarranted invasion of personal privacy.

Name of Committee: National Institute on Alcohol Abuse and Alcoholism Special Emphasis Panel.

Date: October 28, 2013.

Time: 2:00 p.m. to 4:00 p.m.

Agenda: To review and evaluate grant applications.

Place: National Institute on Alcohol Abuse and Alcoholism, 5635 Fishers Lane, Bethesda, MD 20892, (Telephone Conference Call).

Contact Person: Beata Buzas, Ph.D. Scientific Review Officer, National Institute On Alcohol Abuse and Alcoholism, National Institutes Of Health, 5635 Fishers Lane, Rm 2081, Rockville, MD 20852, 301–443–0800, *bbuzas@mail.nih.gov.*

(Catalogue of Federal Domestic Assistance Program No. 93.273, Alcohol Research Programs; National Institutes of Health, HHS)

Dated: September 3, 2013.

Carolyn A. Baum,

Program Analyst, Office of Federal Advisory Committee Policy.

[FR Doc. 2013–21784 Filed 9–6–13; 8:45 am]

BILLING CODE 4140–01–P

DEPARTMENT OF HOMELAND SECURITY

Office of the Secretary

[Docket No. DHS–2013–0056]

DHS Data Privacy and Integrity Advisory Committee

AGENCY: Privacy Office, DHS.

ACTION: Committee Management; Request for Applicants for Appointment to the DHS Data Privacy and Integrity Advisory Committee.

SUMMARY: The Department of Homeland Security Privacy Office is seeking applicants for appointment to the DHS Data Privacy and Integrity Advisory Committee.

DATES: Applications for membership must reach the Department of Homeland Security Privacy Office at the address below on or before October 9, 2013.

ADDRESSES: If you wish to apply for membership, please submit the documents described below to Shannon Ballard, Designated Federal Officer, DHS Data Privacy and Integrity Advisory Committee, by *either* of the following methods:

- *Email: PrivacyCommittee@hq.dhs.gov.* Include the Docket Number (DHS–2013–0056) in the subject line of the message.
- *Fax:* (202) 343–4010

FOR FURTHER INFORMATION CONTACT: Shannon Ballard, Designated Federal Officer, DHS Data Privacy and Integrity Advisory Committee, Department of Homeland Security, Washington, DC 20528, by telephone (202) 343–1717, by fax (202) 343–4010, or by email to *PrivacyCommittee@hq.dhs.gov.*

SUPPLEMENTARY INFORMATION: The DHS Data Privacy and Integrity Advisory Committee is an advisory committee established in accordance with the provisions of the *Federal Advisory Committee Act* (FACA), 5 U.S.C.A. App. 2. The Committee was established by the Secretary of Homeland Security

under the authority of 6 U.S.C. 451 and provides advice at the request of the Secretary and the DHS Chief Privacy Officer on programmatic, policy, operational, administrative, and technological issues within DHS that relate to personally identifiable information (PII), as well as data integrity and other privacy-related matters. The duties of the Committee are solely advisory in nature. In developing its advice and recommendations, the Committee may, consistent with the requirements of the FACA, conduct studies, inquiries, workshops, and seminars in consultation with individuals and groups in the private sector and/or other governmental entities. The Committee typically meets three times in a calendar year.

Committee Membership: The DHS Privacy Office is seeking applicants for terms of three years from the date of appointment. Members are appointed by and serve at the pleasure of the Secretary of the Department of Homeland Security, and must be specially qualified to serve on the Committee by virtue of their education, training, and experience in the fields of data protection, privacy, and/or emerging technologies. Members are expected to actively participate in Committee activities and provide material input into Committee research and recommendations. Pursuant to the FACA, the Committee's Charter requires that Committee membership be balanced to include:

1. Individuals who are currently working in higher education, state or local government, or not-for-profit organizations;
2. Individuals currently working in for-profit organizations including at least one who shall be familiar with the data privacy-related issues addressed by small- to medium-sized enterprises; and
3. Other individuals, as determined appropriate by the Secretary.

Committee members serve as Special Government Employees (SGE) as defined in section 202(a) of title 18 United States Code. As such, they are subject to Federal conflict of interest laws and government-wide standards of conduct regulations. Members must annually file Confidential Financial Disclosure Reports (OGE Form 450) for review and approval by Department ethics officials. DHS may not release these reports or the information in them to the public except under an order issued by a Federal court or as otherwise provided under the *Privacy Act* (5 U.S.C. 552a). Committee members are also required to obtain and retain at least a secret-level security clearance as a condition of their appointment. Members are not compensated for their service on the Committee; however, while attending meetings or otherwise engaged in Committee business, members may receive travel expenses and per diem in accordance with Federal regulations.

Committee History and Activities: All individuals interested in applying for Committee membership should review the history of the Committee's work. The Committee's charter and current membership, transcripts of Committee meetings, and all of the Committee's reports and recommendations to the Department are posted on the Committee's Web page on the DHS Privacy Office Web site (*www.dhs.gov/privacy*).

Applying for Membership: If you are interested in applying for membership on the DHS Data Privacy and Integrity Advisory Committee, please submit the following documents to Shannon Ballard, Designated Federal Officer, at the address provided below within 30 days of the date of this notice:

1. A current resume; and
2. A letter that explains your qualifications for service on the Committee and describes in detail how your experience is relevant to the Committee's work.

Your resume and your letter will be weighed equally in the application review process. Please note that by Administration policy, individuals who are registered as Federal lobbyists are not eligible to serve on Federal advisory committees. If you are registered as a Federal lobbyist and you have actively lobbied at any time within the past two years, you are not eligible to apply for membership on the DHS Data Integrity and Privacy Advisory Committee. Applicants selected for membership will be required to certify, pursuant to 28 U.S.C. 1746, that they are not registered as Federal lobbyists. Please send your documents to Shannon Ballard, Designated Federal Officer, DHS Data Privacy and Integrity Advisory Committee, by *either* of the following methods:

- *Email: PrivacyCommittee@hq.dhs.gov* or
- *Fax:* (202) 343–4010.

Privacy Act Statement: DHS's Use of Your Information

Authority: DHS requests that you voluntarily submit this information under its following authorities: The *Federal Records Act,* 44 U.S.C. 3101; the FACA, 5 U.S.C. App. 2; and the *Privacy Act of 1974,* 5 U.S.C. 552a.

Principal Purposes: When you apply for appointment to the DHS Data Privacy and Integrity Advisory Committee, DHS collects your name, contact information, and any other personal information that you submit in conjunction with your application. We will use this information to evaluate your candidacy for Committee membership. If you are chosen to serve as a Committee member, your name will appear in publicly-available Committee documents, membership lists, and Committee reports.

Routine Uses and Sharing: In general, DHS will not use the information you provide for any purpose other than the Principal Purposes, and will not share this information within or outside the agency. In certain circumstances, DHS may share this information on a case-by-case basis as required by law or as necessary for a specific purpose, as described in the DHS/ALL–009 Department of Homeland Security Advisory Committees System of Records Notice (October 3, 2008, 73 FR 63181).

Effects of Not Providing Information: You may choose not to provide the requested information or to provide only some of the information DHS requests. If you choose not to provide some or all of the requested information, DHS may not be able to consider your application for appointment to the Data Privacy and Integrity Advisory Committee.

Accessing and Correcting Information: If you are unable to access or correct this information by using the method that you originally used to submit it, you may direct your request in writing to the DHS Chief FOIA Officer at *foia@hq.dhs.gov.* Additional instructions are available at *http://www.dhs.gov/foia* and in the DHS/ALL–002 Mailing and Other Lists System of Records referenced above.

Dated: August 27, 2013.

Jonathan R. Cantor,

Acting Chief Privacy Officer, Department of Homeland Security.

[FR Doc. 2013–21858 Filed 9–6–13; 8:45 am]

BILLING CODE 9110–9L–P

DEPARTMENT OF HOMELAND SECURITY

Coast Guard

[USCG–2012–0797]

National Maritime Security Advisory Committee; Meeting

AGENCY: Coast Guard, DHS.

ACTION: Notice of Federal Advisory Committee Meeting.

SUMMARY: The National Maritime Security Advisory Committee (NMSAC) will meet on September 24–25, 2013 in Washington, DC to discuss various

issues relating to national maritime security. This meeting will be open to the public.

DATES: The Committee will meet on Tuesday, September 24, 2013 from 9:00 a.m. to 4:00 p.m. and Wednesday, September 25, 2013 from 8:00 a.m. to 11:00 a.m. This meeting may close early if all business is finished. All written material and requests to make oral presentations should reach the Coast Guard on or before September 13, 2013.

ADDRESSES: This meeting will be held at the new Coast Guard Headquarters, 2703 Martin Luther King Jr. Avenue SE., Washington, DC 20593, Room 6i10–01–b–17. Due to security at the new Headquarters, members of the public wishing to attend shall register with Mr. Ryan Owens, Alternate Designated Federal Officer (ADFO) of NMSAC, telephone 202–372–1108 or *ryan.f.owens@uscg.mil* no later than September 18, 2013. Additionally, all visitors to the Coast Guard Headquarters must provide identification in the form of Government Issue picture identification card for access to the facility. Please arrive at least 30 minutes before the planned start of the meeting in order to pass through security.

This meeting will be broadcast via a web enabled interactive online format and teleconference line. To participate via teleconference, dial 866–810–4853; the pass code to join is 9760138#. Additionally, if you would like to participate in this meeting via the online web format, please log onto *https://share.dhs.gov/nmsac/* and follow the online instructions to register for this meeting.

For information on facilities or services for individuals with disabilities or to request special assistance at the meeting, contact the person listed in the **FOR FURTHER INFORMATION CONTACT** section as soon as possible.

To facilitate public participation, we are inviting public comment on the issues to be considered by the Committee as listed in the ''Agenda'' section below. Comments that the public wishes the members to see prior to the meeting should be submitted no later than September 18, 2013. Identify your comments by docket number [USCG–2012–0797] using one of the following methods:

- *Federal eRulemaking Portal: http://www.regulations.gov.* Follow the instructions for submitting comments.
- *Mail:* Docket Management Facility (M–30), U.S. Department of Transportation, West Building Ground Floor, Room W12–140, 1200 New Jersey Avenue SE., Washington, DC 20590–0001. We encourage use of electronic submissions because security screening may delay delivery of mail.
- *Fax:* (202) 493–2251.
- *Hand Delivery:* Same as mail address above, between 9:00 a.m. and 5:00 p.m., Monday through Friday, except Federal Holidays. The telephone number is 202–366–9329.

Instructions: All submissions received must include the words ''Department of Homeland Security'' and docket number [USCG–2012–0797]. All submissions received will be posted without alteration at *www.regulations.gov,* including any personal information provided. You may review a Privacy Act notice regarding our public dockets in the January 17, 2008 issue of the **Federal Register** (73 FR 3316).

Docket: Any background information or presentations available prior to the meeting will be published in the docket. For access to the docket to read background documents or submissions received by NMSAC, go to *http://www.regulations.gov* insert ''USCG–2012–0797'' in the ''Search'' box, and follow instructions on the Web site.

Public comments will be sought throughout the meeting by the Designated Federal Officer (DFO) as specific issues are discussed by the committee. Additionally, public oral comment period will be held during the meetings on September 24, 2013, from 3:30 p.m. to 4:00 p.m., and September 25, 2013 from 10:30 a.m. to 11:00 a.m. Speakers are requested to limit their comments to 5 minutes. Please note that the public comment period will end following the last call for comments. Contact the person listed in the **FOR FURTHER INFORMATION CONTACT** section below to register as a speaker.

FOR FURTHER INFORMATION CONTACT: Mr. Ryan Owens, ADFO of NMSAC, 2703 Martin Luther King Jr. Avenue SE., Washington, DC 20593, Stop 7581, Washington, DC 20593–7581; telephone 202–372–1108 or email *ryan.f.owens@uscg.mil.* If you have any questions on viewing or submitting material to the docket, call Barbara Hairston, Program Manager, Docket Operations, telephone 202–366–9826.

SUPPLEMENTARY INFORMATION: Notice of this meeting is given under the Federal Advisory Committee Act (FACA), Title 5, United States Code, Appendix (Pub. L. 92–463). NMSAC operates under the authority of 46 U.S.C. 70112. NMSAC provides advice, consults with, and makes recommendations to the Secretary of Homeland Security, via the Commandant of the Coast Guard, on matters relating to national maritime security.

Agenda of Meeting

Day 1

The committee will meet to review, discuss and formulate recommendations on the following issues:

(1) Cyber Security Executive Order. On February 12, 2013, President Barack Obama signed an Executive Order [1] to strengthen the cybersecurity of critical infrastructure by increasing information sharing and by jointly developing and implementing a framework of cybersecurity practices with our industry partners. This is a continuation of a discussion held during the April 2013 public meeting. NMSAC will meet to review the Executive Order and begin initial work in developing a framework for the maritime community.

(2) Presidential Policy Directive-21.[2] On February 12, 2013, the White House Office of the Press Secretary published a Presidential Policy Directive (PPD) on critical infrastructure security and resilience. PPD–21 updates the national approach from Homeland Security Presidential Directive-7 (issued in 2003) to adjust to the new risk environment, understand key lessons learned, and drive toward enhanced capabilities. This is a continuation of a discussion held during the April 2013 public meeting. NMSAC will meet to discuss and make recommendations on Coast Guard's implementation of PPD–21 that will impact the maritime community.

(3) Chemical Facility Safety and Security Executive Order. President Obama signed an Executive Order [3] on August 1, 2013, with the goal of improving information sharing among Federal departments and agencies and furthering coordination efforts with State, Local, and Tribal entities involved in chemical regulation and response. In addition, the Executive Order directs Federal agencies to look for opportunities to modernize policies, regulations and standards and to seek out stakeholder input to identify best practices. NMSAC will meet to discuss and make recommendations on the Executive Order impacts on the maritime community.

[1] The Executive Order (not numbered) is available for viewing online at the White House's Web site: *http://www.whitehouse.gov/the-press-office/2013/02/12/executive-order-improving-critical-infrastructure-cybersecurity.*

[2] Presidential Policy Directive-21 is available for viewing online at the White House's Web site: *http://www.whitehouse.gov/the-press-office/2013/02/12/presidential-policy-directive-critical-infrastructure-security-and-resil.*

[3] The Executive Order is available for viewing online at the White House's Web site: *http://www.whitehouse.gov/the-press-office/2013/08/01/executive-order-improving-chemical-facility-safety-and-security.*

(4) Transportation Security Worker Identification Credential (TWIC) Notice of Proposed Rule Making. NMSAC will meet to receive an update, discuss concerns and make recommendations concerning this Rule Making project.

(5) Radiation Portal Monitoring. NMSAC will meet to review and discuss the Radiation Portal Monitoring Program and the challenges involved in replacing/altering current monitor programs within ports.

(6) Regulatory Agenda. NMSAC will meet to review, discuss and make recommendations to the Coast Guard's future regulatory agenda.

(7) Public Comment period.

Day 2

The committee will meet to receive oral reports on the following issues:

(1) Lessons learned/best practices encountered during Maritime Security (MARSEC) Level increase over the Boston Marathon bombing.

(2) Lessons learned/best practices from Hurricane Sandy Recovery.

(3) Facility Security Office (FSO) training initiatives. NMSAC will discuss/make recommendations on current FSO training initiatives.

(4) Future Security issues. NMSAC will be tasked to provide guidance on emergent security issues. This will help the Coast Guard develop a long term vision for its maritime security program.

(4) Public comment period.

J.C. Burton,

Captain, U.S. Coast Guard, Director of Inspections and Compliance.

[FR Doc. 2013–21923 Filed 9–6–13; 8:45 am]

BILLING CODE 9110–04–P

DEPARTMENT OF HOUSING AND URBAN DEVELOPMENT

[Docket No. FR–5733–N–01]

Fair Housing Initiatives Program—Fiscal Year 2013 Application and Award Policies and Procedures—Solicitation of Comment

AGENCY: Office of the Assistant Secretary for Fair Housing and Equal Opportunity, HUD.

ACTION: Notice.

SUMMARY: This notice invites interested parties to comment on HUD's administration of the funding competition for the Fair Housing Initiatives Program during Fiscal Year (FY) 2013.

DATES: *Comment Due Date: October 9, 2013.*

ADDRESSES: Interested persons are invited to submit comments regarding this rule to the Regulations Division, Office of General Counsel, Department of Housing and Urban Development, 451 7th Street SW., Room 10276, Washington, DC 20410–0500. Communications must refer to the above docket number and title. There are two methods for submitting public comments. All submissions must refer to the above docket number and title.

1. *Submission of Comments by Mail.* Comments may be submitted by mail to the Regulations Division, Office of General Counsel, Department of Housing and Urban Development, 451 7th Street SW., Room 10276, Washington, DC 20410–0500.

2. *Electronic Submission of Comments.* Interested persons may submit comments electronically through the Federal eRulemaking Portal at *www.regulations.gov.* HUD strongly encourages commenters to submit comments electronically. Electronic submission of comments allows the commenter maximum time to prepare and submit a comment, ensures timely receipt by HUD, and enables HUD to make them immediately available to the public. Comments submitted electronically through the *www.regulations.gov* Web site can be viewed by other commenters and interested members of the public. Commenters should follow the instructions provided on that site to submit comments electronically.

Note: To receive consideration as public comments, comments must be submitted through one of the two methods specified above. Again, all submissions must refer to the docket number and title of the rule.

No Facsimile Comments. Facsimile (FAX) comments are not acceptable.

Public Inspection of Public Comments. All properly submitted comments and communications submitted to HUD will be available for public inspection and copying between 8 a.m. and 5 p.m. weekdays at the above address. Due to security measures at the HUD Headquarters building, an appointment to review the public comments must be scheduled in advance by calling the Regulations Division at 202–708–3055 (this is not a toll-free number). Individuals with speech or hearing impairments may access this number via TTY by calling the Federal Relay Service at 800–877–8339. Copies of all comments submitted are available for inspection and downloading at *www.regulations.gov.*

FOR FURTHER INFORMATION CONTACT: Myron Newry or Paula Stone of the Office of Fair Housing and Equal Opportunity's FHIP Division at 202–402–7095 and 202–402–7054, respectively (these are not toll-free numbers). Persons with hearing or speech impairments may access these numbers via TTY by calling the Federal Relay Service at 800–877–8339 (this is a toll free number).

SUPPLEMENTARY INFORMATION: In anticipation of the next round of funding and grant administration under the Fair Housing Initiatives Program (FHIP), HUD invites comments from potential applicants, prior grantees and applicants, and any other interested parties, on HUD's FY 2013 FHIP competition and HUD's administration of grants during FY 2013. HUD's FY 2013 FHIP NOFA can be found at *http://portal.hud.gov/hudportal/HUD?src=/program_offices/administration/grants/fundsavail/nofa13/fhip.* HUD is especially interested in soliciting comments on the Applications and Awards Procedures and Policies (AAPP) Guide, which can be found at: *http://portal.hud.gov/hudportal/documents/huddoc?id=FY13HUD-FHIPAAPPGuide.pdf.*

HUD will consider the comments received in response to this notice when formulating plans for the administration of FHIP grants and disposition of funds appropriated for Fiscal Year 2014.

Dated: August 27, 2013.

David R. Ziaya,

Deputy Assistant Secretary for Operations and Management.

[FR Doc. 2013–21857 Filed 9–6–13; 8:45 am]

BILLING CODE 4210–67–P

DEPARTMENT OF THE INTERIOR

Fish and Wildlife Service

[FWS–R2–ES–2013–N189; FXES11130200000–134–FF02ENEH00]

Endangered and Threatened Species Permit Applications

AGENCY: Fish and Wildlife Service, Interior.

ACTION: Notice of receipt of applications; request for public comment.

SUMMARY: We, the U.S. Fish and Wildlife Service (Service), invite the public to comment on the following applications to conduct certain activities with endangered or threatened species. The Endangered Species Act of 1973, as amended (Act), prohibits activities with endangered and threatened species unless a Federal permit allows such activities. The Act and the National Environmental Policy Act also require that we invite public comment before issuing these permits.

DATES: To ensure consideration, written comments must be received on or before October 9, 2013.

ADDRESSES: Marty Tuegel, Section 10 Coordinator, by U.S. mail at Division of Endangered Species, U.S. Fish and Wildlife Service, P.O. Box 1306, Room 6034, Albuquerque, NM at 505–248–6920. Please refer to the respective permit number for each application when submitting comments.

FOR FURTHER INFORMATION CONTACT: Susan Jacobsen, Chief, Endangered Species Division, P.O. Box 1306, Albuquerque, NM 87103; 505–248–6651.

SUPPLEMENTARY INFORMATION:

Public Availability of Comments

The Act (16 U.S.C. 1531 *et seq.*) prohibits activities with endangered and threatened species unless a Federal permit allows such activities. Along with our implementing regulations in the Code of Federal Regulations (CFR) at 50 CFR 17, the Act provides for permits, and requires that we invite public comment before issuing these permits.

A permit granted by us under section 10(a)(1)(A) of the Act authorizes applicants to conduct activities with U.S. endangered or threatened species for scientific purposes, enhancement of survival or propagation, or interstate commerce. Our regulations regarding implementation of section 10(a)(1)(A) permits are found at 50 CFR 17.22 for endangered wildlife species, 50 CFR 17.32 for threatened wildlife species, 50 CFR 17.62 for endangered plant species, and 50 CFR 17.72 for threatened plant species.

Applications Available for Review and Comment

We invite local, State, Tribal, and Federal agencies, and the public to comment on the following applications. Please refer to the appropriate permit number (e.g., Permit No. TE–123456) when requesting application documents and when submitting comments.

Documents and other information the applicants have submitted with these applications are available for review, subject to the requirements of the Privacy Act (5 U.S.C. 552a) and Freedom of Information Act (5 U.S.C. 552).

Permit TE–63651A

Applicant: Power Engineers, Inc., Austin, Texas.

Applicant requests a new permit for research and recovery purposes to conduct presence/absence surveys of golden-cheeked warbler (*Dendroica chrysoparia*) and black-capped vireo (*Vireo atricapilla*) within Texas.

Permit TE–030115

Applicant: Bureau of Land Management, Safford Field Office, Safford, Arizona.

Applicant requests an amendment to a current permit for research and recovery purposes to capture and transport Gila chub (*Gila intermedia*) to the Fish Heath Centers for health assessments and to capture and transport salvaged individuals in case of drought, fire, or other environmental hazard throughout Arizona.

Permit TE–819473

Applicant: Eagle Environmental, Inc., Santa Fe, New Mexico.

Applicant requests a renewal to a current permit for research and recovery purposes to conduct presence/absence surveys of southwestern willow flycatcher (*Empinodax traillii extimus*), northern aplomado falcon (*Falco femoralis septentrioalis*), and interior least tern (*Sternula antillarum athalassos*) within Arizona, New Mexico, and Texas.

Permit TE–039544

Applicant: Michael Forstner, San Marcos, Texas.

Applicant requests a renewal to a current permit for research and recovery purposes to conduct the following activities for Houston toad (*Bufo houstonensis*): presence/absence surveys; conduct outreach activities; captively propagate and headstart; and reintroduce to sites not historically documented within Texas.

Permit TE–069848

Applicant: Ross Rasmussen, Plano, Texas.

Applicant requests a renewal to a current permit for research and recovery purposes to conduct presence/absence surveys for the following species in Arizona, New Mexico, and Texas:

- Black-capped vireo (*Vireo atricapilla*)
- Golden-cheeked warbler (*Dendroica chrysoparia*)
- Northern aplomado falcon (*Falco femoralis septentrioalis*)
- Southwestern willow flycatcher (*Empinodax traillii extimus*)

Permit TE–92407A

Applicant: Raven Environmental Services, Inc., Huntsville, Texas.

Applicant requests an amendment to a current permit for research and recovery purposes to conduct the following activities for red-cockaded woodpeckers (*Picoides borealis*): construct and monitor artificial nest cavities and restrictors; monitor populations and nest cavities using Swedish climbing ladders and/or video probes (peepers); translocate individuals; and capture and release adult birds using pole net over nest cavities and nestlings using the noose method throughout the species' range in the southwest and southeast regions of the Service.

Permit TE–13598B

Applicant: Bradley Burford, Frederick, Maryland.

Applicant requests a new permit for research and recovery purposes to conduct presence/absence surveys for American burying beetle (*Nicrophorus americanus*) within Arkansas, Kansas, Missouri, Ohio, Oklahoma, Rhode Island, South Dakota, and Texas.

Permit TE–829996

Applicant: Houston Zoo, Houston, Texas.

Applicant requests a renewal to a current permit for research and recovery purposes to conduct presence/absence surveys for and/or conduct husbandry and holding of the following species in Texas:

- Barton Springs salamander (*Eurycea sosorum*)
- Big Bend gambusia (*Gambusia gaigei*)
- Comanche Springs pupfish (*Cyprinodon elegans*)
- Hawksbill sea turtle (*Eretmochelys imbricata*)
- Houston toad (*Bufo houstonensis*)
- Jaguarundi (*Herpailurus jagouaroundi cacomitli*)
- Kemps ridley sea turtle (*Lepidochelys kempii*)
- Leatherback sea turtle (*Dermochelys coriacea*)
- Leon Springs pupfish (*Cyprinodon bovinus*)

Permit TE–13600B

Applicant: Omaha's Henry Doorly Zoo and Aquarium, Omaha, Nebraska.

Applicant requests a new permit for research and recovery purposes to conduct husbandry and holding of woundfin (*Plagopterus argentissimus*) and Gila topminnow (*Poeciliopsis occidentalis*) at the zoo in Nebraska.

Permit TE–046447

Applicant: U.S. Geological Survey, Yankton, South Dakota.

Applicant requests a renewal of a current permit for research and recovery purposes to hold and captively propagate Rio Grande silvery minnows (*Hybognathus amarus*) at the field station in Yankton, South Dakota.

Permit TE–13914B

Applicant: Justin Coons, Shiatook, Oklahoma.

Applicant requests a new permit for research and recovery purposes to conduct presence/absence surveys for American burying beetle (*Nicrophorus americanus*) within Oklahoma.

Permit TE–65178A

Applicant: Jennifer Reidy, Liberty, Missouri.

Applicant requests an amendment to a current for research and recovery purposes to conduct banding of nestling golden-cheeked warlbers (*Dendroica chrysoparia*) within Balcones Canyonlands National Wildlife Refuge, Texas.

National Environmental Policy Act (NEPA)

In compliance with NEPA (42 U.S.C. 4321 *et seq.*), we have made an initial determination that the proposed activities in these permits are categorically excluded from the requirement to prepare an environmental assessment or environmental impact statement (516 DM 6 Appendix 1, 1.4C(1)).

Public Availability of Comments

All comments and materials we receive in response to this request will be available for public inspection, by appointment, during normal business hours at the address listed in the **ADDRESSES** section of this notice.

Before including your address, phone number, email address, or other personal identifying information in your comment, you should be aware that your entire comment—including your personal identifying information—may be made publicly available at any time. While you can ask us in your comment to withhold your personal identifying information from public review, we cannot guarantee that we will be able to do so.

Authority

We provide this notice under section 10 of the Act (16 U.S.C. 1531 *et seq.*)

Dated: August 27, 2013.

Joy E. Nicholopoulos,

Acting Regional Director, Southwest Region.

[FR Doc. 2013–21810 Filed 9–6–13; 8:45 am]

BILLING CODE 4310–55–P

DEPARTMENT OF THE INTERIOR

Bureau of Land Management

[UT–030–13–1610–PH–241A]

Call for Nominations to the Grand Staircase-Escalante National Monument Advisory Committee, UT

AGENCY: Bureau of Land Management, Interior.

ACTION: Notice.

SUMMARY: The purpose of this notice is to request public nominations for two members of the Grand Staircase-Escalante National Monument Advisory Committee (GSENM–MAC). The GSENM–MAC provides advice and recommendations to the GSENM on science issues and the achievement of the GSENM Monument Management Plan objectives. GSENM will accept public nominations for 30 days from the publication date of this notice.

DATES: A completed nomination form and accompanying nomination/recommendation letters must be received at the address listed below no later than October 9, 2013.

ADDRESSES: GSENM Headquarters Office, 669 South Highway 89A, Kanab, UT 84741.

FOR FURTHER INFORMATION CONTACT: Larry Crutchfield, Public Affairs Officer, see **ADDRESSES** above, telephone 435–644–1209; or email *lcrutchf@blm.gov.* Persons who use a telecommunications device for the deaf (TDD) may call the Federal Information Relay Service (FIRS) at 1–800–877–8339 to contact the above individual during normal business hours. The FIRS is available 24 hours a day, 7 days a week. You will receive a reply during normal business hours.

SUPPLEMENTARY INFORMATION: The Secretary of the Interior established the GSENM–MAC pursuant to Section 309 of the Federal Land Policy and Management Act of 1976 (43 U.S.C. 1739) and in conformity with the Federal Advisory Committee Act of 1972 (5 U.S.C. Appendix 2). The 15 appointed members of the GSENM–MAC perform several primary tasks: (1) Review evaluation reports produced by the Management Science Team and make recommendations on protocols and projects to meet overall objectives; (2) Review appropriate research proposals and make recommendations on project necessity and validity; (3) Make recommendations regarding allocation of research funds through review of research and project proposals as well as needs identified through the evaluation process above; and (4) Consult on issues such as protocols for specific projects.

The Secretary of the Interior appoints persons to the GSENM–MAC who are representatives of various stakeholder interests pertaining to land use planning and management of the lands under BLM management in the GSENM.

Each GSENM–MAC member will be a person who, as a result of training and experience, has knowledge or special expertise which qualifies him or her to provide advice from among the categories of interest listed below. As appropriate, certain committee members may be appointed as special government employees who serve on the committee without compensation, and are subject to financial disclosure requirements in the Ethics in Government Act and 5 CFR part 2634.

Individuals may nominate themselves or others to serve on the GSENM–MAC. Nomination forms may be obtained from the GSENM Headquarters Office, (address listed above).

The following must accompany all nomination packages:

—A letter of nomination;
—A completed nomination form;
—Letters of reference from the represented interests or organizations associated with the interest represented by the candidate; and,
—Any other information that speaks to the candidate's qualifications.

One member, a livestock grazing permittee operating within the GSENM, will be appointed to the committee to represent livestock operators on the GSENM; and one member will be appointed as a special government employee with expertise in systems ecology. The specific category should be identified in the letter of nomination and in the nomination form.

Simultaneous with this notice, the GSENM will issue a press release providing additional information.

Authority: 43 CFR 1784.4–1.

Jenna Whitlock,

Associate State Director.

[FR Doc. 2013–21834 Filed 9–6–13; 8:45 am]

BILLING CODE 4310–DQ–P

DEPARTMENT OF THE INTERIOR

National Park Service

[NPS– PWR–PWRO–12232: PPWONRADE2–PMP00EI05.YP0000]

Dog Management Plan, Supplemental Environmental Impact Statement, Golden Gate National Recreation Area, California

AGENCY: National Park Service, Interior.

ACTION: Notice of availability.

SUMMARY: Pursuant to Section 102 (2)(c) of the National Environmental Policy Act of 1969, 42 U.S.C. 4332(2)(C), the National Park Service (NPS) is releasing a Supplemental Environmental Impact Statement for the Dog Management Plan (Plan/SEIS), Golden Gate National Recreation Area (GGNRA), California. Current dog management in the park is based on a number of factors. Areas included in the GGNRA Citizens' Advisory Commission's 1979 pet policy, followed by the park for over twenty years, must be managed in accordance with the June 2, 2005, decision by the U.S. District Court for Northern California (*US* vs. *Barley,* 405 F.Supp. 2d 1121) holding that NPS cannot enforce the NPS-wide regulation requiring on leash walking of pets (36 CFR 2.15(a)(2)) in areas where the park had previously allowed off leash use until notice and comment rulemaking under 36 CFR 1.5(b) is completed. A Notice of Proposed Rulemaking will be published for notice and comment after comments on the Plan/SEIS have been received, evaluated, and addressed. A final rule will be published after the final Plan/FEIS has been published and a Record of Decision signed.

The purpose of the Plan/SEIS is to determine the manner and extent of dog use in appropriate areas of the park, provide a clear, enforceable dog management policy, preserve and protect natural and cultural resources and natural processes, provide a variety of visitor experiences, improve visitor and employee safety, and reduce user conflicts.

The Plan/SEIS evaluates the impacts of six alternatives for dog management in 22 areas of GGNRA. The range of alternatives includes the consensus recommendations of the GGNRA Negotiated Rulemaking Committee for Dog Management, the 1979 Pet Policy, 36 CFR 2.15, voice-control dog walking and commercial dog walking. The preferred alternative includes site specific treatments from multiple action alternatives that together allow for a balanced range of visitor experiences, including areas that prohibit dogs, and areas that allow on-leash and voice-control dog walking. It includes the following key elements: The Negotiated Rulemaking Committee's consensus agreements; on-leash and/or voice and sight-control dog walking in multiple specific areas of the park where impacts to sensitive resources and visitor experience are minimized; no dogs in areas of the park where impacts are unacceptable and can not be mitigated; a monitoring-based management strategy measuring compliance in on-leash and voice and sight-control dog walking areas that will provide information for a range of management responses as needed, including further restrictions or elimination of a use where compliance is not able to be achieved by lesser actions; permits for both individual and commercial dog walkers for more than three dogs, with a maximum of six, in limited areas of the park; and the site-specific analysis of Rancho Corral de Tierra as a recently-acquired GGNRA site evaluated under the Plan/SEIS.

DATES: All written comments must be postmarked or transmitted not later than 90 days following publication in the **Federal Register** by the Environmental Protection Agency of the notice of filing and availability of the Plan/SEIS.

ADDRESSES: Electronic copies of the Plan/SEIS will be available for public review at *http://parkplanning.nps.gov/goga.* A limited number of printed copies will be available at Park Headquarters, Fort Mason, Building 201, San Francisco, CA. Copies will be available at local libraries in San Mateo, San Francisco and Marin Counties, as well as in Berkeley and Oakland. For further information or to request a copy of the Plan/SEIS, please contact: Shirwin Smith, Management Assistant, Golden Gate National Recreation Area, Fort Mason, Building 201, San Francisco, CA 94123, (415) 561–4947.

SUPPLEMENTARY INFORMATION: The NPS is most interested in comments on the changes between the draft and supplemental EIS, including the following: The addition of new data (including additional law enforcement and visitor use data), additional references, additional information regarding compliance with the Americans with Disabilities Act, changes to the impacts analysis (including additional analysis of potential redistributive effects of opening/closing areas to dog walking), changes to the compliance-based management strategy (now the monitoring-based management strategy) by including natural and cultural resource monitoring and removing automatic triggers and restrictions, evaluation of fencing as a method to minimize dog walking impacts, and relatively minor changes to some site specific changes in the preferred alternative. Additionally, a site recently transferred to GGNRA, Rancho Corral de Tierra, was added to the park sites considered in the range of reasonable alternatives analyzed by the plan/SEIS. Comments submitted on the earlier Plan/draft EIS (DEIS) will continue to be considered and do not need to be resubmitted.

After the EPA's **Federal Register** notice is published, the NPS will schedule three open-house style public meetings during the comment period. Dates, times, and locations of these meetings will be announced in press releases, email announcements and on the NPS Planning, Environment, and Public Comment (PEPC) Web site for the project at *http://parkplanning.nps.gov/goga.*

If you wish to comment electronically, you may submit your comments online at the PEPC Web site by visiting *http://parkplanning.nps.gov/goga,* clicking on open for comment, clicking on Dog Management Plan/EIS, and then clicking on Comment on Document. NPS encourages commenting electronically through PEPC. Note that the deadline for submitting comments online at the PEPC Web site is midnight, Mountain Time (11 p.m. Pacific Time), on the last day of the public comment period. If you wish to submit your written comments in hard copy (e.g. in a letter), you may send them by U.S. Postal Service or other mail delivery service or hand-deliver them to: Frank Dean, General Superintendent, Golden Gate National Recreation Area, Fort Mason, Building 201, San Francisco, CA 94123. Comments will also be accepted during the three open house public meetings. Comments will not be accepted by fax, email, or in any other way than those specified above. Bulk comments in any format (hard copy or electronic) submitted on behalf of others will not be accepted.

Before including your address, phone number, email address, or other personal identifying information in your comment, you should be aware that your entire comment—including your personal identifying information—may be made publicly available at any time. While you can ask us in your comment to withhold your personal identifying information from public review, we cannot guarantee that we will be able to do so.

Because this is a delegated EIS, the official responsible for approval of the final Plan is the Regional Director, Pacific West Region, National Park Service; subsequently the official responsible for implementation of the approved Plan is the General Superintendent, Golden Gate National Recreation Area.

Dated: August 27, 2013.

Christine S. Lehnertz,

Regional Director, Pacific West Region.

[FR Doc. 2013–21726 Filed 9–6–13; 8:45 am]

BILLING CODE 4312–FF–P

INTERNATIONAL TRADE COMMISSION

[Investigation Nos. 701–TA–365–366 and 731–TA–734–735 (Third Review)]

Certain Pasta From Italy and Turkey

Determinations

On the basis of the record [1] developed in the subject five-year reviews, the United States International Trade Commission (Commission) determines, pursuant to section 751(c) of the Tariff Act of 1930 (19 U.S.C. 1675(c)), that revocation of the countervailing and antidumping duty orders on certain pasta from Italy and Turkey would be likely to lead to continuation or recurrence of material injury to an industry in the United States within a reasonably foreseeable time.[2]

Background

The Commission instituted these reviews on September 4, 2012 (77 FR 53909) and determined on December 10, 2012 that it would conduct full reviews (78 FR 959, January 7, 2013). Notice of the scheduling of the Commission's reviews and of a public hearing to be held in connection therewith was given by posting copies of the notice in the Office of the Secretary, U.S. International Trade Commission, Washington, DC, and by publishing the notice in the **Federal Register** on February 12, 2013 (78 FR 9937). A revised scheduling notice was subsequently published in the **Federal Register** on March 8, 2013 (78 FR 15046). The hearing was held in Washington, DC, on July 11, 2013, and all persons who requested the opportunity were permitted to appear in person or by counsel.

The Commission transmitted its determinations in these reviews to the Secretary of Commerce on August 30, 2013. The views of the Commission are contained in USITC Publication 4423 (August 2013), entitled *Certain Pasta from Italy and Turkey: Investigation Nos. 701–TA–365–366 and 731–TA–734–735 (Third Review).*

Issued: September 3, 2013.

By order of the Commission.

Lisa R. Barton,

Acting Secretary to the Commission.

[FR Doc. 2013–21841 Filed 9–6–13; 8:45 am]

BILLING CODE 7020–02–P

[1] The record is defined in sec. 207.2(f) of the Commission's Rules of Practice and Procedure (19 CFR 207.2(f)).

[2] Commissioners David S. Johanson and Meredith M. Broadbent dissenting with respect to imports of certain pasta from Turkey.

INTERNATIONAL TRADE COMMISSION

[Investigation No. 337–TA–893]

Certain Flash Memory Chips and Products Containing Same; Institution of Investigation

AGENCY: U.S. International Trade Commission.

ACTION: Notice.

SUMMARY: Notice is hereby given that a complaint was filed with the U.S. International Trade Commission on August 1, 2013, under section 337 of the Tariff Act of 1930, as amended, 19 U.S.C. 1337, on behalf of Spansion LLC of Sunnyvale, California. The complaint alleges violations of section 337 based upon the importation into the United States, the sale for importation, and the sale within the United States after importation of certain flash memory chips and products containing the same by reason of infringement of certain claims of U.S. Patent No. 6,369,416 (''the '416 patent''); U.S. Patent No. 6,900,124 (''the '124 patent''); U.S. Patent No. 7,018,922 (''the '922 patent''); U.S. Patent No. 6,459,625 (''the '625 patent''); U.S. Patent No. 7,151,027 (''the '027 patent''); and U.S. Patent No. 6,731,536 (''the '536 patent''). The complaint further alleges that an industry in the United States exists as required by subsection (a)(2) of section 337.

The complainant requests that the Commission institute an investigation and, after the investigation, issue a general exclusion order and cease and desist orders.

ADDRESSES: The complaint, except for any confidential information contained therein, is available for inspection during official business hours (8:45 a.m. to 5:15 p.m.) in the Office of the Secretary, U.S. International Trade Commission, 500 E Street SW., Room 112, Washington, DC 20436, telephone (202) 205–2000. Hearing impaired individuals are advised that information on this matter can be obtained by contacting the Commission's TDD terminal on (202) 205–1810. Persons with mobility impairments who will need special assistance in gaining access to the Commission should contact the Office of the Secretary at (202) 205–2000. General information concerning the Commission may also be obtained by accessing its internet server at *http://www.usitc.gov.* The public record for this investigation may be viewed on the Commission's electronic docket (EDIS) at *http://edis.usitc.gov.*

FOR FURTHER INFORMATION CONTACT: The Office of Unfair Import Investigations, U.S. International Trade Commission, telephone (202) 205–2560.

Authority: The authority for institution of this investigation is contained in section 337 of the Tariff Act of 1930, as amended, and in section 210.10 of the Commission's Rules of Practice and Procedure, 19 CFR 210.10 (2013).

Scope of Investigation: Having considered the complaint, the U.S. International Trade Commission, on September 3, 2013, *ordered that*—

(1) Pursuant to subsection (b) of section 337 of the Tariff Act of 1930, as amended, an investigation be instituted to determine whether there is a violation of subsection (a)(1)(B) of section 337 in the importation into the United States, the sale for importation, or the sale within the United States after importation of certain flash memory chips and products containing the same by reason of infringement of one or more of claims 1–3 of the '416 patent; claims 1, 4–6, 9, and 10 of the '124 patent; claims 1 and 4–6 of the '922 patent; claims 1–14 of the '625 patent; claims 1–14 of the '027 patent; and claims 1–23 of the '536 patent, and whether an industry in the United States exists as required by subsection (a)(2) of section 337;

(2) For the purpose of the investigation so instituted, the following are hereby named as parties upon which this notice of investigation shall be served:

(a) The complainant is: Spansion LLC, 915 DeGuigne Drive, Sunnyvale, CA 94085.

(b) The respondents are the following entities alleged to be in violation of section 337, and are the parties upon which the complaint is to be served:

Macronix International Co., Ltd., No. 16, Li-Hsin Road, Science Park, Hsinchu, Taiwan.

Macronix America, Inc., 680 North McCarthy Boulevard, Suite 200, Milpitas, CA 95035.

Macronix Asia Limited, NKF Bldg. 5F 1–2 Higashida-cho, Kawasaki-ku, Kawasaki-shi, Kanagawa Pref. 210–0005, Japan.

Macronix (Hong Kong) Co., Ltd., 702–703, 7/F, Building 9, Hong Kong Science Park, 5 Science Park West Avenue, Sha Tin, N.T., Hong Kong.

Acer Inc., 8F, 88, Sec. 1, Xintai 5th Road, Xizhi, New Taipei City 221, Taiwan.

Acer America Corporation, 333 West San Carlos Street, Suite 1500, San Jose, CA 95110.

ASUSTek Computer Inc., No. 15, Li-Te Road, Beitou District, Taipei 112, Taiwan.

Asus Computer International, 800 Corporate Way, Fremont, CA 94539.

Belkin International, Inc., 12045 E. Waterfront Drive, Playa Vista, CA 90094.

D-Link Corporation, No. 289, Sinhu 3rd Road, Neihu District, Taipei City 114, Taiwan.

D-Link System, Inc., 17595 Mount Herrmann Street, Fountain Valley, CA 92708.

Netgear Inc., 350 East Plumeria Drive, San Jose, CA 95134.

Nintendo Co., Ltd., 11–1 Kamitobo-hokotate-cho, Minami-ku, Kyoto, Japan.

Nintendo of America, Inc., 4600 150th Avenue NE., Richmond, WA 98052.

(c) The Office of Unfair Import Investigations, U.S. International Trade Commission, 500 E Street SW., Suite 401, Washington, DC 20436; and

(3) For the investigation so instituted, the Chief Administrative Law Judge, U.S. International Trade Commission, shall designate the presiding Administrative Law Judge.

Responses to the complaint and the notice of investigation must be submitted by the named respondents in accordance with section 210.13 of the Commission's Rules of Practice and Procedure, 19 CFR 210.13. Pursuant to 19 CFR 201.16(e) and 210.13(a), such responses will be considered by the Commission if received not later than 20 days after the date of service by the Commission of the complaint and the notice of investigation. Extensions of time for submitting responses to the complaint and the notice of investigation will not be granted unless good cause therefor is shown.

Failure of a respondent to file a timely response to each allegation in the complaint and in this notice may be deemed to constitute a waiver of the right to appear and contest the allegations of the complaint and this notice, and to authorize the administrative law judge and the Commission, without further notice to the respondent, to find the facts to be as alleged in the complaint and this notice and to enter an initial determination and a final determination containing such findings, and may result in the issuance of an exclusion order or a cease and desist order or both directed against the respondent.

Issued: September 4, 2013.

By order of the Commission.

Lisa R. Barton,

Acting Secretary to the Commission.

[FR Doc. 2013–21846 Filed 9–6–13; 8:45 am]

BILLING CODE 7020–02–P

INTERNATIONAL TRADE COMMISSION

[Investigation Nos. 731–TA–1224–1225 (Preliminary)]

Ferrosilicon from Russia and Venezuela

Determination

On the basis of the record [1] developed in the subject investigations, the United States International Trade Commission (Commission) determines, pursuant to section 733(a) of the Tariff Act of 1930 (19 U.S.C. 1673b(a)) (the Act), that there is a reasonable indication that an industry in the United States is materially injured by reason of imports from Russia and Venezuela of ferrosilicon, provided for in subheadings 7202.21.10, 7202.21.50, 7202.21.75, 7202.21.90, and 7202.29.00 of the Harmonized Tariff Schedule of the United States, that are alleged to be sold in the United States at less than fair value (LTFV).

Commencement of Final Phase Investigation

Pursuant to section 207.18 of the Commission's rules, the Commission also gives notice of the commencement of the final phase of its investigations. The Commission will issue a final phase notice of scheduling, which will be published in the **Federal Register** as provided in section 207.21 of the Commission's rules, upon notice from the Department of Commerce (Commerce) of an affirmative preliminary determination in the investigation under section 733(b) of the Act, or, if the preliminary determination is negative, upon notice of an affirmative final determination in that investigation under section 735(a) of the Act. Parties that filed entries of appearance in the preliminary phase of the investigations need not enter a separate appearance for the final phase of the investigations. Industrial users, and, if the merchandise under investigation is sold at the retail level, representative consumer organizations have the right to appear as parties in Commission antidumping and countervailing duty investigations. The Secretary will prepare a public service list containing the names and addresses of all persons, or their representatives, who are parties to the investigations.

Background

On July 19, 2013, a petition was filed with the Commission and Commerce by Globe Specialty Metals, Inc. (''GSM''), New York, New York; CC Metals and Alloys, LLC (''CCMA''), Calvert City, Kentucky; the United Steel, Paper and Forestry, Rubber, Manufacturing, Energy, Allied Industrial and Service Workers International Union (''USW''); and the International Union, United Automobile, Aerospace and Agricultural Implement Workers of America (''UAW''), alleging that an industry in the United States is materially injured and threatened with material injury by reason of LTFV imports of ferrosilicon from Russia and Venezuela. Accordingly, effective July 19, 2013, the Commission instituted antidumping duty investigation nos. 731–TA–1224–1225 (Preliminary).

Notice of the institution of the Commission's investigations and of a public conference to be held in connection therewith was given by posting copies of the notice in the Office of the Secretary, U.S. International Trade Commission, Washington, DC, and by publishing the notice in the **Federal Register** of July 25, 2013 (78 FR 44969). The conference was held in Washington, DC, on August 9, 2013, and all persons who requested the opportunity were permitted to appear in person or by counsel.

The Commission transmitted its determinations in these investigations to the Secretary of Commerce on September 3, 2013. The views of the Commission are contained in USITC Publication 4426 (September 2013), entitled *Ferrosilicon from Russia and Venezuela: Investigation Nos. 731–TA–1224–1225 (Preliminary)*.

Issued: September 3, 2013.

By order of the Commission.

Lisa R. Barton,

Acting Secretary to the Commission.

[FR Doc. 2013–21842 Filed 9–6–13; 8:45 am]

BILLING CODE 7020–02–P

[1] The record is defined in sec. 207.2(f) of the Commission's Rules of Practice and Procedure (19 CFR 207.2(f)).

INTERNATIONAL TRADE COMMISSION

[Investigation No. 337–TA–892]

Certain Point-to-Point Network Communication Devices and Products Containing Same; Institution of Investigation

AGENCY: U.S. International Trade Commission.

ACTION: Notice.

SUMMARY: Notice is hereby given that a complaint was filed with the U.S. International Trade Commission on August 1, 2013, under section 337 of the Tariff Act of 1930, as amended, 19

U.S.C. 1337, on behalf of Straight Path IP Group, Inc. of Glen Allen, Virginia. A letter supplementing the Complaint was filed on August 21, 2013. The complaint alleges violations of section 337 based upon the importation into the United States, the sale for importation, and the sale within the United States after importation of certain point-to-point network communication devices and products containing same by reason of infringement of U.S. Patent No. 6,009,469 (''the '469 patent''); U.S. Patent No. 6,108,704 (''the '704 patent''); and U.S. Patent No. 6,131,121 (''the '121 patent''); and that an industry in the United States exists or is in the process of being established as required by subsection (a)(2) of section 337.

The complaint requests that the Commission institute an investigation and, after the investigation, issue a limited exclusion order and cease and desist orders.

ADDRESSES: The complaint, except for any confidential information contained therein, is available for inspection during official business hours (8:45 a.m. to 5:15 p.m.) in the Office of the Secretary, U.S. International Trade Commission, 500 E Street SW., Room 112, Washington, DC 20436, telephone (202) 205–2000. Hearing impaired individuals are advised that information on this matter can be obtained by contacting the Commission's TDD terminal on (202) 205–1810. Persons with mobility impairments who will need special assistance in gaining access to the Commission should contact the Office of the Secretary at (202) 205–2000. General information concerning the Commission may also be obtained by accessing its internet server at *http://www.usitc.gov.* The public record for this investigation may be viewed on the Commission's electronic docket (EDIS) at *http://edis.usitc.gov.*

FOR FURTHER INFORMATION CONTACT: The Office of Unfair Import Investigations, U.S. International Trade Commission, telephone (202) 205–2560.

Authority: The authority for institution of this investigation is contained in section 337 of the Tariff Act of 1930, as amended, and in section 210.10 of the Commission's Rules of Practice and Procedure, 19 CFR 210.10 (2013).

Scope of Investigation: Having considered the complaint, the U.S. International Trade Commission, on September 3, 2013, *ordered that*—

(1) Pursuant to subsection (b) of section 337 of the Tariff Act of 1930, as amended, an investigation be instituted to determine whether there is a violation of subsection (a)(1)(B) of section 337 in the importation into the United States, the sale for importation, or the sale within the United States after importation of certain point-to-point network communication devices and products containing same by reason of infringement of one or more of claims 1–3, 9, 10, 17, and 18 of the '469 patent; claims 1, 11, 12, 19, 22, 23, and 30 of the '704 patent; and claims 6 and 13 of the '121 patent, and whether an industry in the United States exists or is in the process of being established as required by subsection (a)(2) of section 337;

(2) Pursuant to Commission Rule 210.50(b)(1), 19 CFR 210.50(b)(1), the presiding administrative law judge shall take evidence or other information and hear arguments from the parties and other interested persons with respect to the public interest in this investigation, as appropriate, and provide the Commission with findings of fact and a recommended determination on this issue, which shall be limited to the statutory public interest factors set forth in 19 U.S.C. 1337(d)(1), (f)(1), and (g)(1);

(3) For the purpose of the investigation so instituted, the following are hereby named as parties upon which this notice of investigation shall be served:

(a) The complainant is:

Straight Path IP Group, Inc., 5300 Hickory Park Drive, Suite 218, Glen Allen, VA 23059.

(b) The respondents are the following entities alleged to be in violation of section 337, and are the parties upon which the complaint is to be served:

AmTran Logistics, Inc., 9 Goddard, Irvine, CA 92618.
AmTran Technology Co., Ltd., 17f, 268, Lien Cheng Road, 23553 New Taipei City, Taiwan.
LG Electronics, Inc., LG Twin Towers, 20, Yeouido-dong, Yeoungdeungpo-gu, Seoul, 157–721, Republic of Korea.
LG Electronics U.S.A., Inc., 1000 Sylvan Avenue, Englewood Cliffs, NJ 07632.
LG Electronics MobileComm U.S.A., Inc., 10101 Old Grove Road, San Diego, CA 92131.
Panasonic Corporation, 1006, Oaza Kadoma, Kadoma-shi, Osaka, 571–8501, Japan.
Panasonic Corporation of North America, One Panasonic Way, Secaucus, NJ 07094.
Sharp Corporation, 22–22 Nagaike-cho, Abenko-Ku, Osaka 545–8522, Japan.
Sharp Electronics Corporation, 1 Sharp Plaza, Mahwah, NJ 07495.
Sony Computer Entertainment, Inc., 1–7–1 Konan, Minato-ku, Tokyo 108–0075, Japan.
Sony Computer Entertainment America Inc., 919 East Hillsdale Boulevard, 2nd Floor, Foster City, CA 94404.
Sony Computer Entertainment America LLC, 919 East Hillsdale Boulevard, 2nd Floor, Foster City, CA 94404.
Sony Corporation, 1–7–1 Konan, Minato-ku, Tokyo 108–0075, Japan.
Sony Corporation of America, 550 Madison Avenue, Floor 27, New York, NY 10022–3211.
Sony Electronics Inc., 16530 Via Esprillo, San Diego, CA 92127.
Sony Mobile Communications AB, Nya Vattentornet, Lund, 221 88, Sweden.
Sony Mobile Communications (USA) Inc., 7001 Development Drive, Research Triangle Park, NC 27709.
Sony Ericsson Mobile Communications, (USA) Inc., 333 Piedmont Road NE., Suite 600, Atlanta, GA 30305–1811.
Toshiba Corporation, 1–1, Shibaura 1-chome, Minato-ku, Tokyo 105–8001, Japan.
Toshiba America Inc., 1251 Avenue of the Americas, New York, NY 10020.
Toshiba America Information Systems, Inc., 9740 Irvine Boulevard, Irvine, CA 92618–1697.
Vizio, Inc., 39 Tesla, Irvine, CA 92618.

(c) The Office of Unfair Import Investigations, U.S. International Trade Commission, 500 E Street SW., Suite 401, Washington, DC 20436; and

(4) For the investigation so instituted, the Chief Administrative Law Judge, U.S. International Trade Commission, shall designate the presiding Administrative Law Judge.

Responses to the complaint and the notice of investigation must be submitted by the named respondents in accordance with section 210.13 of the Commission's Rules of Practice and Procedure, 19 CFR 210.13. Pursuant to 19 CFR 201.16(e) and 210.13(a), such responses will be considered by the Commission if received not later than 20 days after the date of service by the Commission of the complaint and the notice of investigation. Extensions of time for submitting responses to the complaint and the notice of investigation will not be granted unless good cause therefor is shown.

Failure of a respondent to file a timely response to each allegation in the complaint and in this notice may be deemed to constitute a waiver of the right to appear and contest the allegations of the complaint and this notice, and to authorize the administrative law judge and the Commission, without further notice to the respondent, to find the facts to be as alleged in the complaint and this notice and to enter an initial determination and a final determination containing

such findings, and may result in the issuance of an exclusion order or a cease and desist order or both directed against the respondent.

Issued: September 4, 2013.

By order of the Commission.

Lisa R. Barton,

Acting Secretary to the Commission.

[FR Doc. 2013–21843 Filed 9–6–13; 8:45 am]

BILLING CODE 7020–02–P

INTERNATIONAL TRADE COMMISSION

[USITC SE–13–022]

Sunshine Act Meeting

AGENCY HOLDING THE MEETING: United States International Trade Commission.

TIME AND DATE: September 12, 2013 at 11:00 a.m.

PLACE: Room 101, 500 E Street SW., Washington, DC 20436, Telephone: (202) 205–2000.

STATUS: Open to the public.

MATTERS TO BE CONSIDERED:

1. Agendas for future meetings: none
2. Minutes
3. Ratification List
4. Vote in Inv. No. 731–TA–919 (Second Review)(Welded Large Diameter Line Pipe from Japan). The Commission is currently scheduled to complete and file its determinations and views of the Commission on or before September 26, 2013.
5. Outstanding action jackets: none

In accordance with Commission policy, subject matter listed above, not disposed of at the scheduled meeting, may be carried over to the agenda of the following meeting.

By order of the Commission.

Issued: September 5, 2013.

William R. Bishop,

Supervisory Hearings and Information Officer.

[FR Doc. 2013–21994 Filed 9–5–13; 4:15 pm]

BILLING CODE 7020–02–P

DEPARTMENT OF JUSTICE

Notice of Lodging of Proposed Consent Decrees Under the Comprehensive Environmental Response, Compensation, and Liability Act

Notice is hereby given that on September 3, 2013, a proposed Consent Decree in *United States* v. *Vermont Asbestos Group, Inc.,* Civil Action No. 2:13–cv–00238–wks, between the United States, State of Vermont, and Vermont Asbestos Group, Inc. was lodged with the United States District Court for the District of Vermont.

In the United States' action brought under Sections 106, 107, and 113(g)(2) of the Comprehensive Environmental Response, Compensation, and Liability Act of 1980, 42 U.S.C. 9606, 9607 and 9613(g)(2) (''CERCLA''), the United States seeks injunctive relief requiring the Vermont Asbestos Group (''Settling Defendant'') to perform the operation and maintenance of the erosion control structures constructed by the United States Environmental Protection Agency at the Vermont Asbestos Group Mine Superfund Site in Lowell and Eden, Vermont. The United States also seeks to recover costs incurred and to be incurred by the United States in response to releases or threatened releases of hazardous substances at or from the Site.

The settlement, based on Settling Defendant's limited ''ability to pay,'' requires Settling Defendant to undertake the operation and maintenance of the erosion control structures at the Site; pay the State of Vermont $5,000 per year for ten years; and stipulate to a judgment in favor of the United States in the amount of $3,360,082 for EPA's past cleanup costs and in favor of the State in the amount of $174,620 for the State's past cleanup costs. The Settling Defendant also stipulates to the entry of a judgment in favor of the State for State Future Response Costs estimated to be at least $28,458,399. These stipulated amounts are to be satisfied only through the recovery of insurance proceeds.

The publication of this notice opens a period for public comment on the Consent Decree. Comments should be addressed to the Assistant Attorney General, Environment and Natural Resources Division, and should refer to *United States* v. *Vermont Asbestos Group, Inc.* (D. Vt.) D.J Ref. No. 90–11–3–07425/3. All comments must be submitted no later than thirty (30) days after the publication date of this notice. Comments may be submitted either by email or by mail:

To submit comments:	*Send them to:*
By email	*pubcomment-ees.enrd@usdoj.gov*
By mail	Assistant Attorney General, U.S. DOJ—ENRD, P.O. Box 7611, Washington, DC 20044–7611.

During the public comment period, the Consent Decree may be examined and downloaded at this Justice Department Web site: *http://www.usdoj.gov/enrd/Consent_Decrees.html.* We will provide paper copies of the consent decree upon written request and payment of reproduction costs. Please mail your request and payment to: Consent Decree Library, U.S. DOJ—ENRD, P.O. Box 7611, Washington, DC 20044–7611.

Please enclose a check or money order for $10.25 (25 cents per page reproduction cost) payable to the United States Treasury.

Robert E. Maher, Jr.,

Assistant Section Chief, Environmental Enforcement Section, Environment and Natural Resources Division.

[FR Doc. 2013–21856 Filed 9–6–13; 8:45 am]

BILLING CODE 4410–15–P

DEPARTMENT OF JUSTICE

Notice of Lodging of Proposed Consent Decree Under the Comprehensive Environmental Response, Compensation, and Liability Act

On August 29, 2013, the Department of Justice lodged a proposed Consent Decree with the United States District Court for the District of Colorado in the lawsuit entitled *United States* v *The Dow Chemical Company,* 1:13–cv–2330.

The Consent Decree resolves the claims of the United States set forth in the complaint against The Dow Chemical Company for costs incurred and to be incurred in connection with the Twins Inn Superfund Site (''Site''), located in Arvada, Jefferson County, Colorado, pursuant to Section 107 of the Comprehensive Environmental Response, Compensation, and Liability Act (''CERCLA''), 42 U.S.C. 9607. Under the Consent Decree, the settling defendant agrees to finance and perform the work for the Site and to reimburse $400,000 in past costs to the United States Environmental Protection Agency.

The publication of this notice opens a period for public comment on the Consent Decree. Comments should be addressed to the Assistant Attorney General, Environment and Natural Resources Division, and should refer to *United States* v. *The Dow Chemical Company,* D.J. Ref. No. 90–11–2–08744/1. All comments must be submitted no later than thirty (30) days after the publication date of this notice. Comments may be submitted either by email or by mail:

To submit comments:	*Send them to:*
By email	*pubcomment-ees.enrd@usdoj.gov.*

To submit comments:	Send them to:
By mail	Assistant Attorney General, U.S. DOJ—ENRD, P.O. Box 7611, Washington, DC 20044–7611.

Under Section 7003(d) of the Resource Conservation and Recovery Act (''RCRA''), a commenter may request an opportunity for a public meeting in the affected area.

During the public comment period, the Consent Decree may be examined and downloaded at this Justice Department Web site: *http://www.usdoj.gov/enrd/Consent_Decrees.html.* We will provide a paper copy of the Consent Decree upon written request and payment of reproduction costs. Please mail your request and payment to: Consent Decree Library, U.S. DOJ—ENRD, P.O. Box 7611, Washington, DC 20044–7611.

Please enclose a check or money order for $22.25 (25 cents per page reproduction cost) payable to the United States Treasury. For a paper copy without the appendices and signature pages, the cost is $16.00.

Maureen M. Katz,

Assistant Section Chief, Environmental Enforcement Section, Environment and Natural Resources Division.

[FR Doc. 2013–21850 Filed 9–6–13; 8:45 am]

BILLING CODE 4410–15–P

DEPARTMENT OF JUSTICE

Drug Enforcement Administration

[Docket No. DEA–378]

Established Aggregate Production Quotas for Schedule I and II Controlled Substances and Established Assessment of Annual Needs for the List I Chemicals Ephedrine, Pseudoephedrine, and Phenylpropanolamine for 2014

AGENCY: Drug Enforcement Administration (DEA), Department of Justice.

ACTION: Notice.

SUMMARY: This notice establishes the initial 2014 aggregate production quotas for controlled substances in Schedules I and II of the Controlled Substances Act (CSA) and assessment of annual needs for the List I chemicals ephedrine, pseudoephedrine, and phenylpropanolamine.

DATES: *Effective:* September 9, 2013.

FOR FURTHER INFORMATION CONTACT: Ruth A. Carter, Chief, Policy Evaluation and Analysis Section, Office of Diversion Control, Drug Enforcement Administration, 8701 Morrissette Drive, Springfield, VA 22152, Telephone: (202) 598–6812.

SUPPLEMENTARY INFORMATION:

Background

Section 306 of the CSA (21 U.S.C. 826) requires the Attorney General to establish aggregate production quotas for each basic class of controlled substance listed in Schedules I and II and for the List I chemicals ephedrine, pseudoephedrine, and phenylpropanolamine. This responsibility has been delegated to the Administrator of the DEA by 28 CFR 0.100. The Administrator, in turn, has redelegated this function to the Deputy Administrator, pursuant to 28 CFR 0.104.

The 2014 aggregate production quotas and assessment of annual needs represent those quantities of Schedules I and II controlled substances and the List I chemicals ephedrine, pseudoephedrine, and phenylpropanolamine to be manufactured in the United States in 2014 to provide for the estimated medical, scientific, research, and industrial needs of the United States, lawful export requirements, and the establishment and maintenance of reserve stocks. These quotas include imports of ephedrine, pseudoephedrine, and phenylpropanolamine but do not include imports of controlled substances for use in industrial processes.

On July 3, 2013, a notice titled, ''Proposed Aggregate Production Quotas for Schedule I and II Controlled Substances and Proposed Assessment of Annual Needs for the List I Chemicals Ephedrine, Pseudoephedrine, and Phenylpropanolamine for 2014,'' was published in the **Federal Register** (78 FR 40186). That notice proposed the 2014 aggregate production quotas for each basic class of controlled substance listed in Schedules I and II and the 2014 assessment of annual needs for the List I chemicals ephedrine, pseudoephedrine, and phenylpropanolamine. All interested persons were invited to comment on or object to the proposed aggregate production quotas and the proposed assessment of annual needs on or before August 2, 2013.

Comments Received

DEA received seven comments from DEA-registered manufacturers within the published comment period on a total of 23 Schedule I and II controlled substances and one List I chemical. Commenters stated that the proposed aggregate production quotas for (1-Pentyl-1H-indol-3-yl)(2,2,3,3-tetramethylcyclopropyl)methanone (UR-144), [1-(5-fluoro-pentyl)-1H-indol-3-yl](2,2,3,3-tetramethylcyclopropyl)methanone (XLR11), N-(1-adamantyl)-1-pentyl-1H-indazole-3-carboxamide (AKB48), cathinone, amphetamine (for sale), codeine (for conversion), codeine (for sale), fentanyl, hydrocodone (for sale), hydromorphone, levomethorphan, methylphenidate, morphine (for conversion), morphine (for sale), noroxymorphone (for conversion), oripavine, oxycodone (for sale), oxymorphone (for conversion), oxymorphone (for sale), phenylacetone, tapentadol, tetrahydrocannabinol, and thebaine were insufficient to provide for the estimated medical, scientific, research, and industrial needs of the United States, export requirements, and the establishment and maintenance of reserve stocks. One commenter stated that the proposed assessment of annual needs quota for phenylpropanolamine (for conversion) was insufficient to provide for the estimated medical, scientific, research, and industrial needs of the United States, export requirements, and the establishment and maintenance of reserve stocks.

Determination of 2014 Aggregate Production Quotas and Assessment of Annual Needs

In determining the 2014 aggregate production quotas and assessment of annual needs, the DEA has taken into consideration the above comments along with the factors set forth at 21 CFR 1303.11 and 21 CFR 1315.11, in accordance with 21 U.S.C. 826(a), and other relevant factors, including the consideration of 2013 manufacturing quotas, current 2013 sales and inventories, 2014 export requirements, industrial use, additional applications for quotas, as well as information on research and product development requirements. Based on this information, the DEA has determined that adjustments to the proposed aggregate production quotas and assessment of annual needs for 1-[1-(2-Thienyl)cyclohexyl]piperidine, carfentanil, cathinone, dihydromorphine, dimethyltryptamine, ecgonine, hydromorphone, levomethorphan, lysergic acid diethylamide, metazocine, methamphetamine, d-methamphetamine (for conversion), methyldesorphine, noroxymorphone (for conversion), oxymorphone (for conversion), phencyclidine, phenylacetone, ephedrine (for conversion), ephedrine (for sale),

phenylpropanolamine (for conversion), and pseudoephedrine (for sale) are warranted. This notice reflects those adjustments.

Regarding (1-Pentyl-1H-indol-3-yl)(2,2,3,3-tetramethylcyclopropyl)methanone (UR-144), [1-(5-fluoro-pentyl)-1H-indol-3-yl](2,2,3,3-tetramethylcyclopropyl)methanone (XLR11), N-(1-adamantyl)-1-pentyl-1H-indazole-3-carboxamide (AKB48), amphetamine (for sale), codeine (for conversion), codeine (for sale), fentanyl, hydrocodone (for sale), methylphenidate, morphine (for conversion), morphine (for sale), oripavine, oxycodone (for sale), oxymorphone (for sale), tapentadol, tetrahydrocannabinol, thebaine, and phenylpropanolamine (for sale), the DEA has determined that the proposed initial 2014 aggregate production quotas and assessment of annual needs are sufficient to meet the current 2014 estimated medical, scientific, research, and industrial needs of the United States. This notice finalizes these aggregate production quotas at the same amounts as proposed.

DEA also specifically considered that inventory allowances granted to individual manufacturers may not always result in the availability of sufficient quantities to maintain an adequate reserve stock pursuant to 21 U.S.C. 826(a), as intended. See 21 CFR 1303.24. This would be concerning if a natural disaster or other unforeseen event resulted in substantial disruption to the amount of controlled substances available to provide for legitimate public need. As such, the DEA included in all Schedule II aggregate production quotas, and certain Schedule I aggregate production quotas, an additional 25% of the estimated medical, scientific, and research needs as part of the amount necessary to ensure the establishment and maintenance of reserve stocks. The established aggregate production quotas reflect these included amounts. This action will not affect the ability of manufacturers to maintain inventory allowances as specified by regulation. The DEA expects that maintaining this reserve in certain established aggregate production quotas will mitigate adverse public effects if an unforeseen event resulted in substantial disruption to the amount of controlled substances available to provide for legitimate public need, as determined by the DEA. The DEA does not anticipate utilizing the reserve in the absence of these circumstances.

In accordance with 21 U.S.C. 826, 21 CFR 1303.11, and 21 CFR 1315.11, the Deputy Administrator hereby establishes the 2014 aggregate production quotas for the following Schedule I and II controlled substances and the 2014 assessment of annual needs for the List I chemicals ephedrine, pseudoephedrine, and phenylpropanolamine, expressed in grams of anhydrous acid or base, as follows:

Basic Class—Schedule I	Established 2014 Quotas (grams)
(1-Pentyl-1H-indol-3-yl)(2,2,3,3-tetramethylcyclopropyl)methanone (UR-144)	15
[1-(5-fluoro-pentyl)-1H-indol-3-yl](2,2,3,3-tetramethylcyclopropyl)methanone (XLR11)	15
1-(1-Phenylcyclohexyl)pyrrolidine	10
1-(5-Fluoropentyl)-3-(1-naphthoyl)indole (AM2201)	45
1-(5-Fluoropentyl)-3-(2-iodobenzoyl)indole (AM694)	45
1-[1-(2-Thienyl)cyclohexyl]piperidine	15
1-[2-(4-Morpholinyl)ethyl]-3-(1-naphthoyl)indole (JWH-200)	45
1-Butyl-3-(1-naphthoyl)indole (JWH-073)	45
1-Cyclohexylethyl-3-(2-methoxyphenylacetyl)indole (SR-18 and RCS-8)	45
1-Hexyl-3-(1-naphthoyl)indole (JWH-019)	45
1-Methyl-4-phenyl-4-propionoxypiperidine	2
1-Pentyl-3-(1-naphthoyl)indole (JWH-018 and AM678)	45
1-Pentyl-3-(2-chlorophenylacetyl)indole (JWH-203)	45
1-Pentyl-3-(2-methoxyphenylacetyl)indole (JWH-250)	45
1-Pentyl-3-(4-chloro-1-naphthoyl)indole (JWH-398)	45
1-Pentyl-3-(4-methyl-1-naphthoyl)indole (JWH-122)	45
1-Pentyl-3-[(4-methoxy)-benzoyl]indole (SR-19, RCS-4)	45
1-Pentyl-3-[1-(4-methoxynaphthoyl)]indole (JWH-081)	45
2-(2,5-Dimethoxy-4-(n)-propylphenyl)ethanamine (2C-P)	30
2-(2,5-Dimethoxy-4-ethylphenyl)ethanamine (2C-E)	30
2-(2,5-Dimethoxy-4-methylphenyl)ethanamine (2C-D)	30
2-(2,5-Dimethoxy-4-nitro-phenyl)ethanamine (2C-N)	30
2-(2,5-Dimethoxyphenyl)ethanamine (2C-H)	30
2-(4-Chloro-2,5-dimethoxyphenyl)ethanamine (2C-C)	30
2-(4-Iodo-2,5-dimethoxyphenyl)ethanamine (2C-I)	30
2,5-Dimethoxy-4-ethylamphetamine (DOET)	25
2,5-Dimethoxy-4-n-propylthiophenethylamine	25
2,5-Dimethoxyamphetamine	25
2-[4-(Ethylthio)-2,5-dimethoxyphenyl]ethanamine (2C-T-2)	30
2-[4-(Isopropylthio)-2,5-dimethoxyphenyl]ethanamine (2C-T-4)	30
3,4,5-Trimethoxyamphetamine	25
3,4-Methylenedioxyamphetamine (MDA)	55
3,4-Methylenedioxymethamphetamine (MDMA)	50
3,4-Methylenedioxy-N-ethylamphetamine (MDEA)	40
3,4-Methylenedioxy-N-methylcathinone (methylone)	50
3,4-Methylenedioxypyrovalerone (MDPV)	35
3-Methylfentanyl	2
3-Methylthiofentanyl	2
4-Bromo-2,5-dimethoxyamphetamine (DOB)	25
4-Bromo-2,5-dimethoxyphenethylamine (2-CB)	25
4-Methoxyamphetamine	100
4-Methyl-2,5-dimethoxyamphetamine (DOM)	25
4-Methylaminorex	25

Basic Class—Schedule I	Established 2014 Quotas (grams)
4-Methyl-N-methylcathinone (mephedrone)	45
5-(1,1-Dimethylheptyl)-2-[(1R,3S)-3-hydroxycyclohexyl]-phenol	68
5-(1,1-Dimethyloctyl)-2-[(1R,3S)-3-hydroxycyclohexyl]-phenol (cannabicyclohexanol or CP-47, 497 C8-homolog)	53
5-Methoxy-3,4-methylenedioxyamphetamine	25
5-Methoxy-N,N-diisopropyltryptamine	25
5-Methoxy-N,N-dimethyltryptamine	25
Acetyl-alpha-methylfentanyl	2
Acetyldihydrocodeine	2
Acetylmethadol	2
Allylprodine	2
Alphacetylmethadol	2
Alpha-ethyltryptamine	25
Alphameprodine	2
Alphamethadol	2
Alpha-methylfentanyl	2
Alpha-methylthiofentanyl	2
Alpha-methyltryptamine (AMT)	25
Aminorex	25
Benzylmorphine	2
Betacetylmethadol	2
Beta-hydroxy-3-methylfentanyl	2
Beta-hydroxyfentanyl	2
Betameprodine	2
Betaprodine	2
Bufotenine	3
Cathinone	70
Codeine Methylbromide	5
Codeine-N-oxide	200
Desomorphine	5
Diethyltryptamine	25
Difenoxin	50
Dihydromorphine	3,990,000
Dimethyltryptamine	35
Dipipanone	5
Fenethylline	5
Gamma-hydroxybutyric acid	70,250,000
Heroin	25
Hydromorphinol	2
Hydroxypethidine	2
Ibogaine	5
Lysergic acid diethylamide (LSD)	35
Marihuana	21,000
Mescaline	25
Methaqualone	10
Methcathinone	25
Methyldesorphine	2
Methyldihydromorphine	2
Morphine Methylbromide	5
Morphine Methylsulfonate	5
Morphine-N-oxide	175
N-(1-adamantyl)-1-pentyl-1H-indazole-3-carboxamide (AKB48)	15
N-Benzylpiperazine	25
N,N-Dimethylamphetamine	25
N-Ethyl-1-phenylcyclohexylamine	5
N-Ethylamphetamine	24
N-Hydroxy-3,4-methylenedioxyamphetamine	24
Noracymethadol	2
Norlevorphanol	52
Normethadone	2
Normorphine	18
Para-fluorofentanyl	2
Parahexyl	5
Phenomorphan	2
Pholcodine	2
Properidine	2
Psilocybin	30
Psilocyn	30
Tetrahydrocannabinols	491,000
Thiofentanyl	2
Tilidine	10
Trimeperidine	2

Basic Class—Schedule II	Established 2014 Quotas (grams)
1-Phenylcyclohexylamine	3
1-Piperdinocyclohexanecarbonitrile (PCC)	3
4-Anilino-N-phenethyl-4-piperidine (ANPP)	2,687,500
Alfentanil	17,625
Alphaprodine	3
Amobarbital	9
Amphetamine (for conversion)	18,375,000
Amphetamine (for sale)	49,000,000
Carfentanil	19
Cocaine	240,000
Codeine (for conversion)	68,750,000
Codeine (for sale)	46,125,000
Dextropropoxyphene	19
Dihydrocodeine	100,750
Diphenoxylate	750,000
Ecgonine	144,000
Ethylmorphine	3
Fentanyl	2,108,750
Glutethimide	3
Hydrocodone (for sale)	99,625,000
Hydromorphone	6,750,000
Isomethadone	5
Levo-alphacetylmethadol (LAAM)	4
Levomethorphan	195
Levorphanol	2,000
Lisdexamfetamine	23,750,000
Meperidine	6,250,000
Meperidine Intermediate-A	6
Meperidine Intermediate-B	11
Meperidine Intermediate-C	6
Metazocine	19
Methadone (for sale)	31,875,000
Methadone Intermediate	38,875,000
Methamphetamine	2,811,375
[1,250,000 grams of levo-desoxyephedrine for use in a non-controlled, non-prescription product; 1,500,000 grams for methamphetamine mostly for conversion to a schedule III product; and 61,375 grams for methamphetamine (for sale)]	
Methylphenidate	96,750,000
Morphine (for conversion)	91,250,000
Morphine (for sale)	62,500,000
Nabilone	30,375
Noroxymorphone (for conversion)	17,500,000
Noroxymorphone (for sale)	1,462,500
Opium (powder)	112,500
Opium (tincture)	625,000
Oripavine	22,750,000
Oxycodone (for conversion)	9,250,000
Oxycodone (for sale)	149,375,000
Oxymorphone (for conversion)	25,000,000
Oxymorphone (for sale)	7,750,000
Pentobarbital	35,000,000
Phenazocine	6
Phencyclidine	19
Phenmetrazine	3
Phenylacetone	67,000,000
Racemethorphan	3
Remifentanil	3,750
Secobarbital	215,003
Sufentanil	6,255
Tapentadol	17,500,000
Thebaine	145,000,000

Basic Class—List I Chemicals	Proposed 2014 Quotas
Ephedrine (for conversion)	1,000,000
Ephedrine (for sale)	3,000,000
Phenylpropanolamine (for conversion)	44,800,000
Phenylpropanolamine (for sale)	5,300,000
Pseudoephedrine (for conversion)	5,000
Pseudoephedrine (for sale)	192,000,000

The Deputy Administrator also establishes aggregate production quotas for all other Schedule I and II controlled substances included in 21 CFR 1308.11 and 1308.12 at zero. Pursuant to 21 CFR 1303.13 and 21 CFR 1315.13, upon consideration of the relevant factors, the Deputy Administrator may adjust the 2014 aggregate production quotas and assessment of annual needs as needed.

Dated: August 30, 2013.

Thomas M. Harrigan,

Deputy Administrator.

[FR Doc. 2013–21797 Filed 9–6–13; 8:45 am]

BILLING CODE 4410–09–P

DEPARTMENT OF LABOR

Employee Benefits Security Administration

[Application No. D–11758]

Notice of Proposed Exemption involving AT&T Inc. (Together With AT&T Inc.'s Affiliates, AT&T or the Applicant) Located in Dallas, TX

AGENCY: Employee Benefits Security Administration, U.S. Department of Labor.

ACTION: Notice of Proposed Exemption.

SUMMARY: This document contains a notice of pendency before the Department of Labor (the Department) of a proposed individual exemption from certain prohibited transaction restrictions of the Employee Retirement Income Security Act of 1974, as amended (ERISA or the Act), and the Internal Revenue Code of 1986, as amended (the Code). The proposed transactions involve AT&T, the AT&T Pension Benefit Plan (the Plan), and the SBC Master Pension Trust (the Trust). The proposed exemption, if granted, would affect the Plan and its participants and beneficiaries.

Effective Date: If granted, this proposed exemption will be effective as of September 1, 2013.

DATES: Written comments and requests for a public hearing on the proposed exemption should be submitted to the Department within 55 days from the date of publication of this **Federal Register** Notice.

ADDRESSES: Comments and requests for a hearing should state: (1) The name, address, and telephone number of the person making the comment or request, and (2) the nature of the person's interest in the proposed exemption and the manner in which the person would be adversely affected by the exemption, if granted. A request for a hearing must also state the issues to be addressed and include a general description of the evidence to be presented at the hearing. All written comments and requests for a public hearing concerning the proposed exemption should be sent to the Office of Exemption Determinations, Employee Benefits Security Administration, Room N–5700, U.S. Department of Labor, 200 Constitution Avenue NW., Washington DC 20210, Attention: Application No. D–11758. Interested persons are also invited to submit comments and/or hearing requests to EBSA via email or FAX. Any such comments or requests should be sent either by email to: *moffitt.betty@dol.gov,* or by FAX to (202) 219–0204 by the end of the scheduled comment period. The application for exemption and the comments received will be available for public inspection in the Public Documents Room of the Employee Benefits Security Administration, U.S. Department of Labor, Room N–1513, 200 Constitution Avenue NW., Washington, DC 20210. Comments and hearing requests will also be available online at *www.regulations.gov* and *www.dol.gov/ebsa,* at no charge.

Warning: If you submit written comments or hearing requests, do not include any personally identifiable information (such as name, address, or other contact information) or confidential business information that you do not want publicly disclosed. All comments and hearing requests may be posted on the Internet and can be retrieved by most Internet search engines.

FOR FURTHER INFORMATION CONTACT: Anna Mpras Vaughan, Office of Exemption Determinations, Employee Benefits Security Administration, U.S. Department of Labor, telephone (202) 693–8565. (This is not a toll-free number.)

SUPPLEMENTARY INFORMATION: This document contains a notice of proposed exemption that, if granted, would provide exemptive relief from sections 406(a)(1)(A), 406(a)(1)(B), 406(a)(1)(D), 406(a)(1)(E), 406(a)(2), 406(b)(1), 406(b)(2), and 407(a) of the Act and the sanctions resulting from the application of section 4975 of the Code, by reason of section 4975(c)(1)(A), 4975(c)(1)(B), 4975(c)(1)(D) and 4975(c)(1)(E) of the Code. The proposed exemption has been requested by AT&T pursuant to section 408(a) of the Act and section 4975(c)(2) of the Code, and in accordance with the procedures set forth in 29 CFR Part 2570, Subpart B (76 FR 66637, 66644, October 27, 2011). Effective December 31, 1978, section 102 of the Reorganization Plan No. 4 of 1978, 5 U.S.C. App. 1 (1996), transferred the authority of the Secretary of the Treasury to issue administrative exemptions under section 4975(c)(2) of the Code to the Secretary of Labor. Accordingly, this notice of proposed exemption is being issued solely by the Department.

Summary of Facts and Representations [1]

Background

1. AT&T Inc. (together with its affiliates, AT&T), formerly known as SBC Communications Inc., is a holding company incorporated in 1983 under the laws of the State of Delaware that has its principal executive offices in Dallas, Texas. AT&T, a provider of telecommunications services, offers its services and products to consumers in the U.S. and to businesses and other providers of telecommunications services worldwide. The services and products that AT&T offers vary by market, and include: wireless communications, local exchange services, long-distance services, data/broadband and Internet services, video services, telecommunications equipment, managed networking and wholesale services.

2. AT&T is the sponsor of the AT&T Pension Benefit Plan (the Plan). Effective December 14, 2010, the Plan was amended (the 2010 Amendment) to name the Plan's named fiduciary, AT&T Services, as the plan administrator. AT&T Services, pursuant to delegation (the Delegation) from its Board of Directors (the Board) dated July 1, 2011, delegated to the AT&T Inc. Benefit Plan Investment Committee (the Committee) all powers and authority that may be necessary or appropriate to the establishment, qualification, administration, maintenance, and operation of the SBC Master Pension Trust (the Trust) established as part of the Plan. Notwithstanding its power to delegate authority, the Committee retains, and may not delegate, the authority to authorize ''company-directed'' investments (i.e., investments that have not been delegated to a third party investment manager) in amounts greater than $200,000,000.

3. In addition to AT&T Services and the Committee, other Plan fiduciaries include Brock Fiduciary Services LLC (the Independent Fiduciary), an investment manager that is independent of AT&T Inc.

[1] The Summary of Facts and Representations is based on the Applicant's representations and does not reflect the views of the Department.

The Issuer

4. AT&T Mobility II LLC (the Issuer), an indirect wholly-owned subsidiary of AT&T Inc., is a Delaware limited liability company that has its principal executive offices in Atlanta, GA. The Issuer provides the wireless services marketed under AT&T's name and serves approximately 107 million mobile users over a nationwide network that spans all major metropolitan areas.

The Applicant represents that AT&T's wireless business is the fastest growing part of AT&T's business. The Issuer earned operating revenues totaling $66.763 billion and income totaling $16.532 billion in the year ended December 31, 2012. During the same year, AT&T's total revenue was $127.434 billion and its cash from operating activities was $39.2 billion. Revenue from wireless data increased from $4.3 billion in 2006 to $31.8 billion in 2012. The Applicant states that the continued financial success of AT&T, anchored by the growth of the Issuer which accounted for approximately 53% of the total operating revenue for all of AT&T's business segments in 2012, has allowed AT&T to pay $10.2 billion in dividends to shareholders in 2012 which was the 29th consecutive year of annual dividend increases for AT&T.

The Plan

5. The Plan is a noncontributory qualified defined benefit pension plan covering substantially all U.S. bargained and non-bargained employees of the participating subsidiaries of AT&T. The Plan provides retirement, disability, death and certain other ancillary benefits to Plan participants. The Plan was originally established effective as of January 1, 1984, as the Southwestern Bell Corporation Management Pension Plan. Effective May 1, 1992, the name of the Plan was changed to the SBC Pension Benefit Plan, and effective November 18, 2005, the name of the Plan was changed to the AT&T Pension Benefit Plan. As of December 31, 2012, there were approximately 551,187 employees participating in the Plan.

The Trust

6. The Trust was established pursuant to a Declaration of Trust originally effective as of January 1, 2007, and amended and restated in its entirety effective as of February 1, 2012, by and between AT&T Services and the Trustee. The Trust holds assets of the Plan and contributions required to fund the Plan are made to and held under the Trust. The assets of the Trust are invested, in small part, in employer securities issued by AT&T. In this regard, as of the 2012 year-end, the aggregate fair market value of these investments was $72,920,000, which constituted approximately 0.16% of the fair market value of the Trust's total assets. It is AT&T's belief that these investments are covered under the statutory exemption described in section 408(e) of ERISA.[2]

Minimum Required Contributions

7. The Applicant represents that AT&T has always satisfied its funding obligations and has never asked for a waiver of those obligations. The Applicant represents that, in fact, AT&T generally has voluntarily funded its pension obligations in advance of the required dates, and notes that AT&T made a voluntary $1 billion cash contribution in 2011.

8. The Applicant represents that as of August 2013, its anticipated minimum required funding contributions for the Plan for the years 2013 through 2019 are as follows:

Calendar year beginning	Minimum required contribution (billions)
January 1, 2013	$0.175
January 1, 2014	1.2
January 1, 2015	1.2
January 1, 2016	0.4
January 1, 2017	0.0
January 1, 2018	0.0
January 1, 2019	0.0
Total	2.975

The Applicant represents that these minimum required contribution estimates are based on certain assumptions, including that the Plan's assets will earn an annual return of 12.0% for 2013 and 2014 and 7.75% thereafter, and that interest rates rise beginning in January 2013 and increase to pre-financial crisis levels by 2017.

The Preferred Interests

9. The Applicant proposes to make an in-kind contribution (the Contribution) of 320 million Series A Cumulative Perpetual Preferred Membership Interests of the Issuer (i.e., the Preferred Interests), a newly created class of preferred membership interests, to the Trust. In order to effectuate the transfer, the Issuer will be recapitalized by amending its governing documents to provide for an additional class of equity consisting of the Preferred Interests. The Preferred Interests will be issued by the Issuer to its parent company, AT&T Inc., and then contributed in their entirety by AT&T Inc. to the Trust. The Preferred Interests are non-voting and do not provide for participation in the management of the Issuer. Currently, the only membership interests issued by the Issuer are common membership interests, all of which are held by AT&T.

10. The Preferred Interests will accrue, pursuant to the Second Amended and Restated Limited Liability Company Agreement of AT&T Mobility II LLC (the LLC Agreement), cumulative distributions of $1.75 per Preferred Interest per annum, payable quarterly upon declaration by the Issuer (the Distributions). At any time when Distributions on any outstanding Preferred Interests are in arrears for purposes of the LLC Agreement: (i) The Issuer will not be permitted to make any transfer of cash to its parent, AT&T Inc., or any other member of the Issuer, whether pursuant to a loan, equity distribution or any other arrangement; and (ii) AT&T Inc. will not be permitted to declare any dividends on or make any repurchases of its common stock. The Applicant represents that it is in AT&T's financial interest, and AT&T intends to exercise its ownership rights in the Issuer, to cause the Issuer to pay the Distributions each quarter in accordance with the LLC Agreement.

11. The Preferred Interests will rank senior to any other class or series of equity interests in the Issuer, now in existence or created in the future, in respect of the right to receive Distributions and the right to receive payments or distributions out of the assets of the Issuer upon voluntary or involuntary liquidation, dissolution or winding up of the Issuer. Therefore, in the event of any voluntary or involuntary liquidation, dissolution or winding up of the affairs of the Issuer, the Trust, as the holder of the Preferred Interests, will be entitled to receive the liquidation value of the Preferred Interests and any accrued cumulative but unpaid Distributions, before any liquidating distribution or payment is made to the holders of any other class or series of equity interests of the Issuer. The liquidation value of the Preferred Interests equals $25.00 per Preferred Interest (i.e., $8 billion in the aggregate) plus any accrued and unpaid Distributions.

12. The fair market value of the Preferred Interests at any point in time will be determined by the Independent Fiduciary in its sole discretion based on certain factors, including the net present value of the expected distributions and the Option Price using a discount rate

[2] The Department expresses no opinion herein as to the applicability of the statutory exemption provided by section 408(e) of the Act with respect to these investments.

that reflects the assumed term [3] as of the valuation date and an appropriate discount for the non-public nature of the Preferred Interests. The Independent Fiduciary estimates that the Preferred Interests will have a fair market value of approximately $9.2–$9.5 billion as of the date of the Contribution (the Contribution Date). The Independent Fiduciary will re-value the Preferred Interests immediately prior to the Contribution Date using the same methodology set forth in its original valuation report, absent extraordinary circumstances. The Independent Fiduciary will also value the Preferred Interests on a quarterly basis after the Contribution Date, using the same methodology, absent extraordinary circumstances, and in accordance with the terms of the IMA.

The Contribution Agreement

13. By their terms, as described in the Contribution Agreement, the Preferred Interests are transferable to AT&T upon exercise of a call option (the Call Option) and a put option (the Put Option), as described below.

Call Option. AT&T and the Issuer (individually or collectively, the Purchaser) will have the right to purchase from the Trust all or any portion of the Preferred Interests, at a price per Preferred Interest equal to the Option Price, at any time and from time to time: (i) During the 12 month period following the date AT&T Inc. issues an annual report reflecting that the Plan is fully funded as determined under U.S. GAAP and calculated by including the fair market value of the Preferred Interests; (ii) on or after a ''Change of Control'' of the Issuer, as such term is defined in the Contribution Agreement; or (iii) on or after the fifth anniversary of the Contribution Date. The Call Option will be exercisable upon 30 days' prior written notice by the Purchaser.

Put Option. The Trust will have the right to require AT&T Inc. to purchase the Preferred Interests, at a price per Preferred Interest equal to the Option Price, at any time and from time to time on or after the earlier of: (i) The first date that the Issuer's debt-to-total-capitalization ratio exceeds that of AT&T Inc.[4]; (ii) the date on which AT&T Inc. is rated below investment grade for two consecutive calendar quarters by at least two of the following rating agencies: Standard & Poor's Ratings Services, Moody's Investor Services, Inc. or FitchRatings, Inc.[5]; (iii) a ''Change of Control'' of the Issuer, as such term is defined in the Contribution Agreement and described below; or (iv) the seventh anniversary of the Contribution Date; provided, however, that except in the event of a Change of Control of the Issuer, AT&T Inc. will not be required to purchase more than 106,666,667 Preferred Interests in any 12 month period. Upon the Independent Fiduciary's request, as of the end of any calendar quarter, AT&T Inc. will, within forty-five (45) calendar days after the end of such calendar quarter, certify as to whether the Issuer's debt-to-total-capitalization ratio exceeds that of AT&T Inc. The Put Option will be exercisable by the Independent Fiduciary on behalf of the Trust upon 60 days' prior written notice to AT&T Inc. The obligation to purchase the Preferred Interests upon exercise of the Put Option may be consummated by any Purchaser (including, for purposes of clarity, any affiliate of AT&T).

Option Price. The Option Price per Preferred Interest is defined as the greater of: (i) The fair market value of the Preferred Interest, determined by the Independent Fiduciary as of the last day of the calendar quarter preceding the date of notice of exercise of a Call Option or Put Option, as the case may be, without regard to certain prior events (the Prior Events),[6] or, for a Preferred Interest that cannot be purchased due to certain limitations noted in the ''Put Option'' description, the fair market value of the Preferred Interest, determined by Brock as of the last day of the calendar quarter immediately preceding the date such Preferred Interest is actually purchased by AT&T Inc., without regard to the Prior Events; and (ii) the sum of $25.00 plus any accrued and unpaid Distributions.

Change of Control. The Contribution Agreement provides that, on the occurrence of any Change of Control, AT&T may exercise or assign its Call Option to the Issuer or any successor owner of 50% or more of the capital or profits interest (or equity) of the Issuer (exclusive of the Preferred Interests). If the Call Option is not exercised upon a Change of Control, the parties will negotiate in good faith to determine ''appropriate treatment'' [7] of the Preferred Interests, which will be subject to the approval of the Independent Fiduciary in its sole discretion. If no agreement can be reached within 60 days of the Change of Control, the Put Option will become immediately exercisable in full, thereby giving the Independent Fiduciary the right to require AT&T to purchase all or any portion of the Preferred Interests at the Option Price, except that: (i) The limitation on the number of Preferred Interests that AT&T may be required to purchase in any twelve month period as described above will not apply; and (ii) AT&T will have a period of up to one year to pay the Option Price. Notwithstanding the foregoing, in no event shall AT&T and the Issuer authorize the transfer of the Preferred Interests to any plan not covered by the Trust except in the event of an occurrence of a Change of Control as defined herein.

Settlement. At the sole election of AT&T, Inc., or any other Purchaser, as the case may be, payment of the Option Price may be made in: (i) Fully paid and non-assessable shares of AT&T Inc. common stock (AT&T Shares) [8]; (ii)

[3] The Applicant explains that the assumed term for valuation purposes is the five year period during which the Preferred Interests cannot be put to or called by AT&T, absent a Change of Control or other acceleration event identified in the Contribution Agreement.

[4] The Contribution Agreement provides that the Issuer's ''debt-to-total-capitalization ratio'' means the Issuer's ''Debt'' divided by the sum of the Issuer's ''Debt'' and total members' equity including outstanding Preferred Interests (as taken directly from the Issuer's most recently prepared U.S. GAAP balance sheet). The term ''Debt'' means, without duplication (i) all obligations of the entity for borrowed money or with respect to deposits or advances of any kind, and (ii) all obligations of the entity evidenced by bonds, debentures, notes or similar instruments. Additionally, AT&T Inc.'s ''debt-to-total-capitalization ratio'' means AT&T Inc.'s Debt divided by the sum of AT&T Inc.'s Debt and total shareholders' equity (as taken directly from AT&T Inc.'s most recently prepared U.S. GAAP balance sheet).

[5] In this instance the Put Option is triggered by a downgrade of AT&T Inc.'s credit rating rather than a downgrade of the Issuer's credit rating because the Issuer is assigned the same credit rating as AT&T Inc. and has no independent rating of its own.

[6] Such events include, with respect to the Call Option: (i) The twelve month period following the date AT&T issues an annual report reflecting the fully funded status of the Plan (on a U.S. GAAP basis); and (ii) the period on or after a Change of Control of the Issuer, and with respect to the Put Option: (i) The first date that the Issuer's debt-to-total-capitalization ratio exceeds that of AT&T; (ii) the date on which AT&T is rated below investment grade for two consecutive calendar quarters by at least two of the following rating agencies: Standard & Poor's Ratings Services, Moody's Investor Services, Inc. or FitchRatings, Inc.; and (iii) the period on or after a Change of Control of the Issuer.

[7] The Applicant represents that ''appropriate treatment'' refers to changes in the structure or features of the Preferred Interests that would protect their status, terms and conditions, and hence, value, in the context of a new business structure that could result from a Change of Control transaction. The Applicant explains that this type of language is often found in the terms of various equity instruments because it is impossible to predict what a future capital structure might be upon a Change of Control. However, the Applicant stresses that if the Independent Fiduciary determines that it cannot obtain such appropriate treatment, it has the unilateral right to trigger the Put Option.

[8] Because AT&T Shares may be issued in payment of the Option Price, AT&T and the Trust have executed a Registration Rights Agreement,

Continued

cash; or (iii) a combination of AT&T Shares and cash. Any AT&T Shares delivered to pay all or a portion of the Option Price will be valued for the purpose of determining the number of AT&T Shares to be delivered to satisfy the Option Price, at the average closing price of the 20 trading days preceding the date of notice of exercise (or, in the case of a delayed payment pursuant to the twelve month payment period described herein in connection with a Change of Control, the 20 trading days preceding the date of payment).

The Contribution Agreement provides that in no event will AT&T Inc. or any other Purchaser, as the case may be, be required to deliver more than 250 million AT&T Shares (the Capped Number) to the Trust in settlement of the Option Price for the Preferred Interests; provided, however, the Purchaser may, in its discretion, deliver more than the Capped Number of AT&T Shares.[9] In the event that the Purchaser, through delivery of the Capped Number of AT&T Shares and AT&T Shares in addition to the Capped Number of AT&T Shares, if any, does not deliver the full number of AT&T Shares otherwise deliverable in settlement of the Option Price for the Preferred Interests, the Purchaser will use its best efforts to authorize and deliver additional AT&T Shares. Finally, the Purchaser may elect, solely at its option, to settle the Option Price, in whole or in part, by delivering cash.

The Contribution Agreement provides further that, in the event that the Purchaser, through delivery of the Capped Number of AT&T Shares and AT&T Shares in addition to the Capped Number of AT&T Shares, if any, does not deliver the full number of AT&T Shares otherwise deliverable in settlement of the Option Price for the Preferred Interests (resulting in a shortfall), the Preferred Interests for which neither AT&T Shares nor cash have been delivered will remain outstanding, and the Plan will continue to receive its Distributions, in accordance with the terms thereof.

The Contribution Agreement also provides that, in the event of a merger, reorganization, consolidation, recapitalization, separation, split-up, liquidation, share combination, stock split, stock dividend, or other change in the corporate structure of AT&T affecting the AT&T Shares (including a conversion of the AT&T Shares into cash or other property), an adjustment may be made in the number and class of shares that may be delivered in settlement of the Option Price for the Preferred Interests, as determined by AT&T, to prevent dilution or accretion with respect to the Capped Number and reflect such changes in corporate structure (e.g., substitution of successor shares), provided, that, if AT&T does not make any such adjustment or the Independent Fiduciary disagrees with the adjustment, the Independent Fiduciary can request that AT&T modify its determination and if AT&T fails to do so, the parties shall resolve the matter in accordance with the dispute resolution procedures specified in the Investment Management Agreement by and between AT&T Services, Inc., the AT&T Benefit Plan Investment Committee, AT&T Inc., and Brock Fiduciary Services LLC or any successor thereto, effective on or about September 9, 2013 (the IMA).

Termination or Resignation of the Independent Fiduciary. The Applicant states that, in the event of a termination or resignation by the Independent Fiduciary, the Independent Fiduciary will continue to serve as the Independent Fiduciary until a successor is appointed, provided that the Committee must use its reasonably commercial efforts to hire a successor within a specified period of time, in accordance with the terms of the IMA. Such successor independent fiduciary shall, among other things, acknowledge in writing the assignment to it of the Contribution Agreement and the IMA and its acceptance of all rights and responsibilities of the Independent Fiduciary thereunder.

Reasons for Entering Into the Exemption Transactions

14. The Applicant represents that the Contribution would benefit the Plan. In this regard, the Applicant states that the Contribution would be substantially in excess of the legally required Plan contributions and would allow AT&T to enhance the sound funding of the Plan. In that respect, the Applicant represents that the value of the Contribution substantially exceeds the amount of contributions that AT&T will be required to make to the Plan for 2013 and for a number of years thereafter. Pursuant to section 412 of the Code, as amended by 2012 legislation titled ''Moving Ahead for Progress in the 21st Century'' (MAP–21), AT&T anticipates that its minimum required funding contribution for 2013 would be approximately $175 million. The Applicant represents that because of capital structure requirements relating to AT&T's business operations, AT&T could not be expected to make cash contributions substantially in excess of the minimum amount required to meet the funding requirements of section 412 of the Code. However, if the proposed exemption is granted, AT&T will contribute Preferred Interests to the Trust in an amount equal to approximately $9.2–$9.5 billion. Therefore, the Applicant states that the Trust will receive assets worth approximately $9 billion in excess of the legally required contributions to the Plans for 2013. The Applicant estimates that the expected annual cash flow payable on the Preferred Interests alone would exceed the 2013 minimum required contribution.

15. The Applicant notes that the Preferred Interests will accrue cumulative Distributions of $1.75 per Preferred Interest per annum, payable quarterly upon declaration by the Issuer. The Applicant believes that this return is very favorable given the returns that otherwise can be obtained on investments in the current market environment. The Applicant states that the Distributions alone will provide $560 million in annual cash flow to the Trust, approximately 11% of the Trust's annual cash flow requirements to pay benefits, thereby substantially reducing the Trust's need to liquidate other assets to meet its benefit payment obligations.

The Applicant further represents that the Contribution would also reduce the necessary investment return on other Trust assets required to satisfy historic annual benefit payments, thereby providing greater security to Plan participants and beneficiaries. In this regard, absent the Contribution, the Applicant states that the Trust would have to earn at least 9.3% on its existing investment portfolio to satisfy its historic annual benefit payments without requiring the Trust to liquidate additional assets. However, the Applicant states that due to the attractive, highly secure cash yield on the Preferred Interests, the remaining Trust assets would have to earn only an 8% rate of return.

providing the Trust certain rights in connection with the registration of the AT&T Shares for sale to the public. The Registration Rights Agreement is described in more detail below.

[9] The Capped Number is equal to or less than the number of authorized but unissued AT&T Shares that are not reserved for future issuance on the date of the Contribution Agreement. According to the Applicant, the Capped Number is an accounting concept necessary to the characterization of the Preferred Interests as equity. Furthermore, the Applicant notes that AT&T can use more than the number of Capped Shares to satisfy its purchase obligation and the number and value of authorized but unissued AT&T Shares far exceeds the value of the Preferred Interests. Therefore, according to the Applicant, the Capped Number does not present a practical limitation on the right of the Independent Fiduciary to exercise the Plan's rights under the Put Option.

Benefits to AT&T

16. The Applicant notes that the Contribution will also benefit AT&T in that the Contribution may be viewed favorably by lenders and the capital markets, and will benefit its business operations by giving AT&T the flexibility to invest further in its business. In this regard, the Applicant explains that the Issuer represents a substantial portion of the value of AT&T. The Applicant notes that the Contribution would in effect dedicate a portion of this valuable asset to satisfying the liabilities of the Plan. The Applicant suggests that AT&T's business success is, in turn, important to the continued existence of the Plan and its ability to pay its liabilities.

Exemptive Relief Requested

17. AT&T requests exemptive relief from sections 406(a)(1)(A), 406(a)(1)(B), 406(a)(1)(D), 406(a)(1)(E), 406(a)(2), 406(b)(1), 406(b)(2) and 407(a) of ERISA with respect to the acquisition, holding and disposition of the Preferred Interests by the Plans, and other related transactions entered into in accordance with the Contribution Agreement.

18. The Applicant believes that absent the requested relief, the Contribution and the exercise of the Call Option or the Put Option (as contemplated by the Contribution Agreement) would violate section 406(a)(1)(A) of ERISA. Section 406(a)(1)(A) of ERISA provides that a fiduciary with respect to a plan shall not cause the plan to engage in a transaction if he knows or should know that such transaction constitutes a direct or indirect sale or exchange of any property between the plan and a party in interest. Under DOL Regulations, section 2509.94–3, an in-kind contribution to a defined benefit pension plan would be prohibited under section 406(a)(1)(A) of ERISA, because it reduces the funding obligation of the plan sponsor.

AT&T also requests exemptive relief from sections 406(a)(1)(B) and 406(b)(1) with respect to certain benefits to AT&T ancillary to the Contribution. For example, the Applicant states that AT&T will claim a deduction under section 404 of the Code for the fair market value of the Preferred Interests on the Contribution Date. Further, the Contribution will preserve cash for application towards AT&T's operations and investments, that will, among other things, maintain AT&T's debt metrics and avoid dilution of shareholder value. Section 406(a)(1)(D) prohibits the use of Plan assets for the benefit of a party in interest, and section 406(b)(2) prohibits a fiduciary from acting in its individual or any other capacity in any transactions involving the Plan on behalf of a party whose interests are adverse to the interests of the Plan or its participants or beneficiaries. The Applicant believes that relief from section 406(a)(1)(D) would avoid arguments that the above referenced (or other) ancillary benefits to AT&T resulting from the Contribution violate the prohibited transaction provisions of ERISA and the Code.

Section 406(a)(1)(E) of ERISA provides that a fiduciary with respect to a plan shall not cause the plan to engage in a transaction if he knows or should know that such transaction constitutes a direct or indirect acquisition, on behalf of the plan, of any employer security in violation of section 407(a). Section 406(a)(2) of ERISA prohibits a fiduciary who has authority or discretionary control of plan assets to permit the plan to hold any employer security if he knows or should know that holding such security violates section 407(a) of ERISA. Section 407(a)(1) of ERISA states that a plan may not acquire or hold any employer security that is not a qualifying employer security. Section 407(a)(2) of ERISA states that a plan may not acquire any qualifying employer security (or qualifying employer real property) if immediately after such acquisition the aggregate fair market value of the employer securities (and employer real property) held by the plan exceeds 10% of the fair market value of the assets of the plan. Section 407(d)(5) of ERISA defines the term ''qualifying employer security'' to mean an employer security which is a stock, a marketable obligation, or an interest in certain publicly traded partnerships.

The Applicant states that the Preferred Interests are not ''qualifying employer securities'' within the meaning of section 407(d)(5) of ERISA because they do not constitute stock, marketable obligations, or interests in a publicly traded partnership. Furthermore, the Applicant states that the Plan will hold 100% of the Preferred Interests. The Applicant represents that as of December 31, 2012, the fair market value of Plan assets held by the Trust was approximately $45.06 billion and the Contribution of the Preferred Interests will result in the Plan holding employer securities and employer real property in excess of 10% of its total assets immediately after the Contribution of the Preferred Interests.

Similarly, the Applicant believes that if the consideration paid to the Trust in connection with the exercise of the Put Option or the Call Option is in the form of shares of AT&T Shares, even though the AT&T Shares would be ''qualifying employer securities,'' their value may exceed 10% of the total assets of the Plan, and it may not be in the best interests of the Plan to require an immediate forced sale of such AT&T Shares at any particular point in time.

Further, AT&T requests exemptive relief under sections 406(a)(1)(B) and 406(b)(1) related to the provisions in the Contribution Agreement that, in the event that the Independent Fiduciary exercises its Put Option (i) other than on account of a Change of Control, limit the number of Preferred Interests that AT&T can be required to purchase in any 12-month period, (ii) in the event of a Change of Control, allow AT&T to defer the purchase of Preferred Interests for up to 12 months (collectively, the ''deferral provisions'') or (iii) in the event the limitation on the maximum number of shares (i.e., the ''Capped Number'') that AT&T is required to deliver in payment of the Option Price results in a deferral of the purchase of any of the Preferred Interests. Relief with respect to the deferral provisions would avoid arguments that the deferral provisions are extensions of credit in violation of the above-cited sections of ERISA and the Code.

Section 406(b)(1) of ERISA provides that a fiduciary with respect to a plan shall not deal with the assets of the plan in his or her own interest or for his or her own account. The Applicant states that it is possible that the Contribution could violate that section of ERISA because of any ancillary benefits to AT&T of the excess funding to the Trust. Additionally, section 406(b)(2) of ERISA provides that a fiduciary with respect to a plan shall not in his individual or in any other capacity act in any transaction involving the plan on behalf of a party (or represent a party) whose interests are adverse to the interests of the plan or the interests of its participants or beneficiaries. The Applicant notes that the Contribution and its related agreements may also violate section 406(b)(2) of ERISA because in effecting the Contribution and its related agreements and arrangements, AT&T will be acting on behalf of the Plan and on behalf of another party (itself) whose interests are adverse to those of the Plan.

The Independent Fiduciary

19. The Independent Fiduciary, a wholly owned subsidiary of Brock Capital Group, has been appointed by AT&T Services to serve as an independent fiduciary on behalf of the Plan and the Plan's participants and beneficiaries with respect to the Contribution, pursuant to the Independent Fiduciary Agreement dated May 1, 2012, by and among AT&T

Services, AT&T Inc. and Brock (the Independent Fiduciary Agreement). In addition, the Independent Fiduciary has been appointed to serve as the investment manager for the Plan and the Plan's participants and beneficiaries with respect to the holding, management and disposition of the Preferred Interests, pursuant to the IMA, and has full discretion to manage that portion of the Plan's assets held by the Trust.

20. The Independent Fiduciary represents that it is independent of and unrelated to AT&T, and has not previously provided services to AT&T. Further, the Independent Fiduciary does not directly or indirectly receive any compensation or other consideration from AT&T. The Independent Fiduciary's fees and expenses as independent fiduciary will be paid by the Trust. The Independent Fiduciary's compensation for its services is not contingent upon or in any way affected by the Independent Fiduciary's decisions.

21. The Independent Fiduciary represents that it is an investment adviser registered under the Investment Advisers Act of 1940, as amended, and is qualified to act as an ''investment manager,'' as that term is defined in section 3(38) of ERISA, for the Plan. In addition, the Independent Fiduciary represents that it has extensive experience as an appraiser of the value of non-publicly traded securities, including securities of the same type as the Preferred Interests. Moreover, the Independent Fiduciary calls upon the services of members of Brock Capital Group who can provide the expertise required to appraise the value of employer securities contributed to employee benefit plans.

22. The Independent Fiduciary will discharge its duties in accordance with the terms of the Independent Fiduciary Agreement and the IMA (and successors to these documents). Pursuant to the Independent Fiduciary Agreement, the Independent Fiduciary's responsibilities include: (i) Determining the value of the Contribution; (ii) determining whether the terms and conditions of the Preferred Interests are prudent and fair to, and in the interest of, the Plan and Trust; (iii) reporting its foregoing determinations in a written report to AT&T and the Committee; (iv) negotiating with AT&T and executing on behalf of the Trust a Contribution Agreement or other collateral agreements necessary or appropriate for implementing the Contribution; (v) reasonably assisting AT&T in obtaining an exemption from the Department and satisfying any terms and conditions thereof; and (vi) reasonably complying with the conditions or limitations imposed on the Independent Fiduciary by such exemption. Moreover, the Independent Fiduciary will authorize the Trustee to accept or dispose of the Preferred Interests, including by exercise of the Put Option or the Call Option, only after the Independent Fiduciary determines that to do so is consistent with the applicable transaction documents.

The IMA

23. Pursuant to the IMA, the Independent Fiduciary, in its capacity as investment manager to the Plan, shall have sole authority and discretion to direct the Trustee with respect to the holding and disposition of the Preferred Interests and any AT&T Shares received by the Trust in exchange therefor pursuant to the Contribution Agreement. In performing its responsibilities as investment manager, the Independent Fiduciary shall value the Preferred Interests once each calendar quarter using the methodology contained in the valuation report delivered pursuant to the Independent Fiduciary Agreement (absent extraordinary circumstances), and report such value to the Committee within 30 days of the quarter end and shall provide, among other things, an estimate of the year end valuation within five (5) business days of the end of each year. In addition, the Independent Fiduciary shall have the authority, to be exercised in its sole discretion: (i) To exercise all rights of the Trust with respect to the Preferred Interests, as set out in (and subject to the terms of) the Contribution Agreement, including but not limited to negotiating and accepting any amendments to the Contribution Agreement; (ii) to enter into any agreements for the benefit of the Plan and the Trust, in order to carry out the purposes of the IMA; (iii) with respect to the Preferred Interests only, to enter into any agreements, incur reasonable costs on behalf of the Plan and the Trust, or pledge or hypothecate assets of the Trust (except the Preferred Interests or the Shares), in order to carry out interest rate swap transactions and credit default swap transactions, provided that the Independent Fiduciary shall provide written notice to the Committee at least 15 days prior to entering into any such transaction and, during such notice period, shall engage in good faith discussions with the Committee as to the advisability of entering into the transactions [10]; and (iv) to make any decision to sell, loan hypothecate, pledge as security for a loan, exchange, convert, securitize, sell interests in, redeem, or otherwise dispose of, any and all of the AT&T Shares received by the Trust in exchange therefor pursuant to the Contribution Agreement.[11]

The Independent Fiduciary's Appraisal Report

24. In an appraisal report dated October 18, 2012, the Independent Fiduciary estimated the fair market value of the Preferred Interests as of August 13, 2012, to be $9.573 billion (or $29.91 per Preferred Interest).

25. The Independent Fiduciary states that in estimating the fair market value of the Preferred Interests, the Independent Fiduciary, among other things, applied valuation methodologies that are generally accepted, including a discounted cash flow analysis of the Preferred Interests' expected Distributions and purchase proceeds, reviewed relevant investment and financial studies, and conducted other such analyses deemed appropriate. In its discounted cash flow analysis, the Independent Fiduciary has considered the appropriate discount rate at which the Preferred Interests' Distributions should be valued (as of the Contribution Date), the credit quality of AT&T Inc. and the Issuer, an appropriate valuation discount because the Preferred Interests are not publicly traded and therefore, illiquid, and a further liquidity discount because a purchase of the Preferred Interests may be settled in the form of unregistered AT&T Inc. common equity.

The Independent Fiduciary's Opinion

26. The Independent Fiduciary represents that it negotiated the terms and conditions of the Preferred Interests on behalf of the Plan over several months. The Independent Fiduciary represents that, members of its team,[12]

[10] In carrying out its authority with respect to this responsibility, the Independent Fiduciary shall take into consideration the Trust's portfolio, including other similar investments held by the Trust.

[11] The Applicant notes that the foregoing responsibilities are subject only to the terms of the Preferred Interests and any conditions or limitations imposed on ownership and disposition of the Preferred Interests under the Contribution Agreement or in the proposed exemption, if granted, and applicable law.

[12] The Independent Fiduciary's team members include Stephen R. Wilson (former CFO of RJR Nabisco, The Reader's Digest Association, and Reckitt & Colman plc), Steven C. Baum (former Managing Partner of Marks Paneth & Shron), Norman H. Brown Jr. (former Managing Director of Donaldson Lufkin & Jenrette), Anthony A. Dreyspool (ERISA attorney and author of the book ERISA Fiduciary Law for Non-Lawyers), Alain Lebec (former Vice Chairman of Merrill Lynch Investment Banking), Donald Walkovik (former Senior Partner at Sullivan & Cromwell) and Charles O. Svenson (attorney and investment banker with

consisting of persons who have extensive financial management experience as senior executives of major corporations and investment banks or who have many years of experience as ERISA fiduciary law experts, engaged with senior officers of AT&T in numerous discussions concerning the nature of Preferred Interests and their terms and conditions. In addition, in order to determine whether the Contribution would be prudent and in the best interest of the Plan and its participants and beneficiaries, the Independent Fiduciary represents that it used the services of its in-house security analyst to determine the value of the Issuer and the value of the Preferred Interests. Those valuations will be updated to the Contribution Date.

27. Based on its aforementioned analysis of the Preferred Interests and the Issuer, the Independent Fiduciary has concluded that it is prudent for the Plan to accept the Contribution and that the Contribution is in the interests of the Plan and its participants and beneficiaries for the following reasons. With the fair market value of the Contribution estimated to be $9.2–$9.5 billion, the Independent Fiduciary states that the Contribution will be well in excess of the legally required contribution to the Plan. Thus, the Independent Fiduciary states that the proposed Contribution would far exceed what AT&T represents it would contribute if it were to make only a cash contribution equal to its minimum funding requirement.

28. Further, the Independent Fiduciary has determined that the cash flows of the Issuer, which is one of the largest wireless telecommunications providers in the United States and one of the most profitable and fastest growing business segments in AT&T's corporate structure, are large enough to cover the annual cash distributions on the Preferred Interests, which are senior preferred interests of the Issuer. In addition, the Independent Fiduciary opines that the cumulative annual cash distribution rate of the Preferred Interests ($1.75 per annum per Preferred Interest) is very favorable compared to income returns that could be obtained on prudent investments under current market conditions. In that respect, the Independent Fiduciary states that AT&T Inc. has represented that the expected annual cash flow payable on the Preferred Interests will exceed the 2013 minimum required funding contribution to the Trust, and as noted in the Independent Fiduciary's valuation report, the distribution payment rate is significantly above the yields on comparable fixed income securities.

29. The Independent Fiduciary also states that the restriction on payment of dividends on AT&T Shares or purchases by AT&T Inc. of AT&T Shares if Distributions on any Preferred Interests are in arrears will be an incentive to the Issuer to pay all Distributions on a regular basis. Further, the Independent Fiduciary states that if the Issuer misses any Distribution payment, the cumulative Distribution feature means that the Plan will not lose any current return on the Preferred Interests. As noted above, the Independent Fiduciary has also determined in its valuation of the Issuer that the Issuer generates an annual cash flow after capital expenses to easily cover the annual $560 million expected Distribution on the Preferred Interests.

30. The Independent Fiduciary has also concluded that the Contribution is protective of the rights of participants and beneficiaries of the Plan because the terms of and conditions of the Preferred Interests, including the Put Option and Call Option, are protective of the interests of the Plan and Trust and are as favorable to the Plan as such terms would be if negotiated at arm's length under similar circumstances between unrelated third parties. Further, the Independent Fiduciary states that it will monitor the continued holding of the Preferred Interests by the Trust, will manage the holding and disposition of the Preferred Interests pursuant to the IMA and will have sole authority on behalf of the Plan to take whatever action the Independent Fiduciary deems appropriate to insure that the transaction remains in the interest of the Plan. Finally, the Independent Fiduciary represents that it will enforce compliance with all conditions and obligations imposed on any party dealing with the Plan by proposed exemption, if granted, and manage any AT&T Shares received by the Trust in exchange for the Preferred Interests pursuant to the Call Option and Put Option until such time as the relief provided herein is no longer needed.

The Registration Rights Agreement

31. As stated above, pursuant to the Contribution Agreement, AT&T has the right, in its sole discretion, to pay the purchase amount for any Preferred Interests purchased pursuant to the Put Option or the Call Option, in whole or in part, by delivering AT&T Shares to the Trust. In connection with the foregoing, the Independent Fiduciary, acting on behalf of the Plan and the Trust, has negotiated the terms of the Registration Rights Agreement with AT&T. The Registration Rights Agreement governs the rights and obligations of the parties with respect to registration rights, transfers and other matters relating to the AT&T Shares (if any) that may be delivered to the Trust pursuant to the Call Option or the Put Option. The Registration Rights Agreement terminates on the second anniversary of the date on which AT&T Shares are delivered to the Trust in the last exercise of the Put Option or the Call Option, as the case may be.

32. The Registration Rights Agreement provides that AT&T will file a Shelf Registration [13] on Form S–3 within thirty (30) days following delivery of AT&T Shares to the Trust upon exercise of the Call or Put Rights (the Registration Trigger). According to the Applicant, this arrangement takes advantage of AT&T's status as a ''well-known seasoned issuer'' (in short, a large public company by market capitalization, referred to as a ''WKSI'') and the ability to file a registration statement that is automatically effective upon filing. The Applicant states further that the Trust would be able to promptly sell AT&T Shares in a public offering four (4) times in any twelve (12) month period with only fifteen (15) business days' notice given to AT&T. According to AT&T and the Independent Fiduciary, fifteen (15) days' notice is reasonable, since a registered underwritten offering could require the Trustee to engage underwriters, etc., will require AT&T to prepare documentation and will require significant involvement from AT&T's outside auditors, all of which will involve some period of time.

33. The Shelf Registration would be maintained and renewed while the Independent Fiduciary continues to manage either the Preferred Interests or AT&T Shares.[14] The Applicant states that this permits the Trust to sell AT&T Shares during a thirty (30) day window period that begins immediately following AT&T's quarterly earnings release (a ''Window''). Each take down under the shelf registration would be for at least $500 million and the sale would

Dewey Ballantine Busby Palmer & Wood, Goldman Sachs, and Donaldson Lufkin & Jenrette).

[13] The Department understands that shelf registration is a process authorized by the SEC under Rule 415 that allows a single registration document to be filed by a company that permits the issuance of multiple securities. Form S–3 issuers may use shelf-registration to register securities that will be offered on an immediate, continuous or delayed basis.

[14] The Independent Fiduciary explains that AT&T Shares will be registered continuously in 3-year intervals (with AT&T having obligations to ''renew'' the S–3 every 3 years). According to the Independent Fiduciary, this arrangement is fairly standard for Shelf Registrations.

be accomplished in a public offering. According to the Applicant, this would permit the Trust to sell all or a part of the AT&T Shares quickly during a Window period in the offering structure deemed by the Independent Fiduciary to be most advantageous. AT&T will have a right-of-first-refusal to purchase AT&T Shares offered for sale by the Plan for two years after the Plan's receipt of such AT&T Shares. After two years, AT&T will have the right to repurchase shares held by the Plan at a 10% premium to the then current market price.

34. The Applicant represents that, in addition to the Shelf Registration, for smaller sales, the Independent Fiduciary would have the ability to make an unlimited number of unregistered sales under Rule 144 with only five (5) business days' notice to AT&T (once the six (6) month holding period of Rule 144 is satisfied).[15] The Applicant represents that, other than the provisions of Rule 144, there is no limit on the number of times this provision may be used or a minimum size.[16]

35. The Applicant represents that AT&T would have the authority to notify the Independent Fiduciary that sales of AT&T Shares are suspended for up to two (2) blackout periods that may not exceed 60 days, in the aggregate, in any twelve (12) month period. According to the Applicant, the ability to suspend sales of AT&T Shares pursuant to blackout periods are designed to allow AT&T to avoid disclosing time-sensitive or confidential information relating to transactions or other corporate activities that otherwise would be disclosable if a securities sale were contemplated. According to the Applicant, blackout periods like these are standard features of longer term continuous registration arrangements, and protect both AT&T and its shareholders, including the Trust.[17]

36. Finally, in addition to the repurchase obligations above, the Independent Fiduciary notes that the Plan can require AT&T to repurchase the AT&T Shares if, during the final 180 days of the term of the Registration Rights Agreement, there is not an S–3 available for the Plan to sell its AT&T Shares (the theory being that the Plan should have a simple public liquidity option available to it in the final months of the term).

Additional Cash Contribution and ''Lookback'' Calculation

37. The Applicant states that AT&T has agreed to make cash contributions to the Trust in addition to the Contribution, in order to approximate the minimum required contributions that would otherwise be payable to the Plan by AT&T in cash, computed as if the Contribution had never been made, for as long as relief under the proposed exemption is in effect.[18] Therefore, the Applicant has agreed to make the following payments to the Trust: (i) Lump sum cash payments (the Lump Sum Payments); and (ii) a ''lookback'' payment (the Net Lookback Amount). Both types of such payments will be made in accordance with the terms described below.

38. With respect to the Lump Sum Payments, the Applicant states that AT&T will make cash contributions to the Trust totaling $700 million, payable as follows: (i) $175 million paid on the Contribution Date; and (ii) $175 million paid no later than the due date for AT&T's tax return for each of the next three years (i.e., 2014, 2015 and 2016).

39. The Applicant represents that the calculation of the Net Lookback Amount and the timing of such contribution are determined as follows: Looking back from January 1, 2018, AT&T shall re-calculate its minimum required contribution after the application of any carryover balances (the Mandatory Funding Obligation) as of the beginning of each of the 2013 through 2017 Plan years with the following modifications to arrive at the ''Gross Lookback Amount'': (i) The calculation of the Mandatory Funding Obligation will use actuarial assumptions in effect for funding purposes as of the first day of the Plan year for which the minimum required contribution is calculated, and assets will assume Mandatory Funding Obligations are contributed when required for the 2013 through 2017 Plan Years and earn actual Trust returns; (ii) the value of Preferred Interests will be disregarded; (iii) the actual cash contributions to the Trust, including the cash contributions made in connection with the Lump Sum Payments and the Distributions will be disregarded; and (iv) earnings on all cash contributions, including cash contributions made in connection with the Lump Sum Payments and the earnings on the Distributions will be included. The Applicant represents that the Gross Lookback Amount is the sum of the Mandatory Funding Obligation for each of the 2013 through 2017 Plan years.

The Applicant further represents that the Gross Lookback Amount shall be reduced by the following items to arrive at the the Net Lookback Amount: (i) Actual cash contributions to the Trust, including cash contributions made in connection with the Lump Sum Payments and Distributions paid to the Trust prior to the date the Net Lookback Amount is paid to the Trust; (ii) the value of the Preferred Interests as of January 1, 2018, that is not in excess of 10% of the total value of the Trust's assets,[19] and (iii) any consideration paid to the Trust pursuant to any exercise of the Put or Call Options at any time prior to the date that the Net Lookback Amount is paid to the Trust. The Applicant states that the Net Lookback Amount will be paid to the Trust no later than September 15 of the year following the year of the calculation of the Net Lookback Amount.[20] The Independent Fiduciary will determine the value of the Preferred Interests for purposes of the Lookback calculation.

Notice to Interested Persons

It is represented that AT&T Inc. shall provide notification (the Notice) of the publication of the proposed exemption (the Proposed Exemption) in the **Federal Register** to interested persons in the following manner. The Notice shall be delivered via email to (i) all former employees and retirees who have consented to and enrolled in electronic delivery of benefits information and (ii) all currently active employees (which includes all non-bargained employees and bargained employees) who participate in the Plan and who either have email access as a part of performing their job or have consented to and enrolled in electronic delivery. Such notification will consist of an explanatory cover letter which will

[15] The Applicant notes that the Trust can also use Rule 144 to sell AT&T Shares during any Window period described above, in addition to such sales that may take place outside the Window period.

[16] The Independent Fiduciary notes that because AT&T Shares sold pursuant to Rule 144 would not be registered, they would likely sell at a discount of at least 10%.

[17] The Applicant represents further that the Registration Rights Agreement also contains provisions that would address AT&T's failure to comply with certain obligations, and that provide alternative mechanisms for effecting public offerings in the event AT&T loses its status as a ''well-known seasoned issuer'' for any reason.

[18] The Department notes that the additional cash payments agreed to by AT&T lend strength to the Applicant's proposition that the Contribution constitutes an additional, voluntary contribution of assets to the Plan. As the Plan is entitled to receive cash in respect of its minimum required contributions, the additional cash payments represent AT&T's attempted satisfaction of its burden in this respect.

[19] The determination of the total value of the Trust's assets includes the Preferred Interests and the actual cash contributions to the Trust, including cash contributions made in connection with the Lump Sum Payments and Distributions (including contribution receivables).

[20] The Applicant states that the payment date is based on when the Trust values are definitely determinable.

contain a link to a summary of the Proposed Exemption (the Summary) and a link to the Proposed Exemption, and will be delivered within two (2) business days of the date of publication of the Notice in the **Federal Register**. The email system will notify AT&T Inc. of any delivery failures to (i) active employees with an AT&T email address on the day that the email notifications are sent and (ii) active employees using an external email address within one business day after the email notifications are sent. For each active employee whose email transmission fails, AT&T Inc. will send the cover letter, the Summary and a copy of the Proposed Exemption via first class US mail to such person's home address. Such mailing will be sent (i) to active employees with an AT&T email address within one business day after the failed email transmission and (ii) to active employees using an external email address within two business days after the failed email transmission.

The Notice shall also be delivered via first class US mail to the home addresses of (i) the approximately 43,000 actively employed bargained employees who participate in the Plan and who do not have email access as part of performing their job or who have not consented to electronic delivery of benefits information and (ii) the estimated 280,000 former employees, retirees, alternate payees, and beneficiaries with benefits under the Plan who have not consented to electronic delivery of benefits information. Such notification shall consist of a cover letter, a Summary and a copy of the Proposed Exemption.

The Trustee and the Independent Fiduciary shall receive the Notice via first class US mail. Such notification shall consist of a cover letter, a Summary and a copy of the Proposed Exemption. In addition, AT&T Inc. or its legal counsel will email such documents to the Trustee and the Independent Fiduciary no later than two (2) business days of the date of publication of the Notice in the **Federal Register**. AT&T Inc. will provide notification to interested persons within 25 calendar days of the date of publication of the Notice in the **Federal Register**. All written comments and/or requests for a hearing must be received by the Department from interested persons no later than 55 days after publication of the Notice in the **Federal Register**.

All comments will be made available to the public. Warning: Do not include any personally identifiable information (such as name, address, or other contact information) or confidential business information that you do not want publicly disclosed. All comments may be posted on the Internet and can be retrieved by most Internet search engines.

General Information

The attention of interested persons is directed to the following:

(1) The fact that a transaction is the subject of an exemption under section 408(a) of the Act and/or section 4975(c)(2) of the Code does not relieve a fiduciary or other party in interest or disqualified person from certain other provisions of the Act and/or the Code, including any prohibited transaction provisions to which the exemption does not apply and the general fiduciary responsibility provisions of section 404 of the Act, which, among other things, require a fiduciary to discharge his duties respecting the plan solely in the interest of the participants and beneficiaries of the plan and in a prudent fashion in accordance with section 404(a)(1)(b) of the Act; nor does it affect the requirement of section 401(a) of the Code that the plan must operate for the exclusive benefit of the employees of the employer maintaining the plan and their beneficiaries;

(2) Before an exemption may be granted under section 408(a) of the Act and/or section 4975(c)(2) of the Code, the Department must find that the exemption is administratively feasible, in the interests of the plan and of its participants and beneficiaries, and protective of the rights of participants and beneficiaries of the plan;

(3) The proposed exemption, if granted, will be supplemental to, and not in derogation of, any other provisions of the Act and/or the Code, including statutory or administrative exemptions and transitional rules. Furthermore, the fact that a transaction is subject to an administrative or statutory exemption is not dispositive of whether the transaction is in fact a prohibited transaction; and

(4) The proposed exemption, if granted, will be subject to the express condition that the material facts and representations contained in each application are true and complete, and that each application accurately describes all material terms of the transaction which is the subject of the exemption.

Proposed Exemption

Based on the foregoing facts and representations submitted by the Applicant, the Department is considering granting an exemption under the authority of section 408(a) of the Employee Retirement Income Security Act of 1974, as amended (ERISA or the Act) and section 4975(c)(2) of the Internal Revenue Code of 1986, as amended (the Code), and in accordance with the procedures set forth in 29 CFR Part 2570, Subpart B (76 FR 66637, 66644, October 27, 2011), as follows: [21]

Section I. Covered Transactions

If the proposed exemption is granted, the restrictions of sections 406(a)(1)(A), 406(a)(1)(B), 406(a)(1)(D), 406(a)(1)(E), 406(a)(2), 406(b)(1), 406(b)(2), and 407(a) of the Act and the sanctions resulting from the application of section 4975 of the Code, by reason of section 4975(c)(1)(A), 4975(c)(1)(B), 4975(c)(1)(D) and 4975(c)(1)(E) of the Code, shall not apply, effective September 1, 2013, to the following transactions, provided that the conditions described in Section II are satisfied:

(a) The one-time, in-kind contribution (the Contribution) by AT&T of 320 million series A Cumulative Perpetual Preferred Membership Interests (the Preferred Interests) of AT&T Mobility II LLC (the Issuer) to the SBC Master Pension Trust (the Trust), which holds assets of the AT&T Pension Benefit Plan (the Plan) in accordance with the terms of the Contribution Agreement;

(b) The holding of the Preferred Interests by the Trust on behalf of the Plan;

(c) The disposition of the Preferred Interests by the Trust in connection with the exercise of the Put Option by the Independent Fiduciary, in accordance with the terms of the Contribution Agreement;

(d) The disposition of the Preferred Interests by the Independent Fiduciary on behalf of the Trust in connection with the exercise of the Call Option, in accordance with the terms of the Contribution Agreement;

(e) The disposition, restructuring, adjustment, or recapitalization of the Preferred Interests resulting from a Change of Control of the Issuer, in accordance with the terms of the Contribution Agreement;

(f) The acquisition and holding by the Trust of shares in AT&T common stock (the AT&T Shares) received in connection with the exercise of the Put Option or the Call Option, in accordance with the terms of the Contribution Agreement, to the extent such acquisition and holding is not permitted by section 407(a) of ERISA; and

[21] For purposes of this proposed exemption, references to specific provisions of Title I of the Act, unless otherwise specified, refer also to corresponding provisions of the Code.

(g) The deferred payment by AT&T to the Trust of any amounts due under the Call Option or the Put Option, in accordance with the terms of the Contribution Agreement.

Section II. Conditions

Relief for the transactions described in Section I of this proposed exemption is conditioned upon satisfaction of the following requirements:

(a) The Preferred Interests have a liquidation value of $25 per Preferred Interest and carry distribution rights of $1.75 per Preferred Interest, or $560 million per year in cash payable to the Trust (the Distributions) in accordance with the terms of the Contribution Agreement;

(b) The Plan incurs no fees, costs or other charges in connection with the transactions described in paragraphs (a)–(g) of Section I, other than fees paid by the Plan to the Independent Fiduciary for duties required by this proposed exemption, if granted, as described herein;

(c) AT&T makes $700 million in additional cash payments (the Additional Payments) to the Trust in the following manner:

(1) $175 million paid at the time the Preferred Interests are contributed to the Trust; and

(2) $175 million paid no later than the due date for AT&T's tax return for each of the next three years (i.e., 2014, 2015 and 2016);

(d) AT&T makes an additional cash contribution to the Trust, equal to the ''Net Lookback Amount,'' no later than September 15, 2019. The Net Lookback Amount will be calculated as follows:

(1) Looking back from January 1, 2018, AT&T will recalculate the minimum required contribution to the Plan after application of any carryover balances (the Mandatory Funding Obligation) for each of the 2013 through 2017 Plan Years, subject to the following requirements:

(i) The calculation of each Mandatory Funding Obligation will use actuarial assumptions in effect for funding purposes as of the first day of the Plan Year for which such contribution is calculated, and the calculation of plan assets will assume each Mandatory Funding Obligation is contributed when required for 2013 through 2017 Plan Years and earn actual Trust returns for each such year;

(ii) The value of the Preferred Interests will be disregarded;

(iii) Actual cash contributions to the Trust, including the Additional Payments and Distributions, will be disregarded; and

(iv) Earnings on all cash contributions, including any earnings on the Additional Payments and Distributions, will be included;

(2) The amounts described in Section (II)(d)(1)(i)–(iv), in the aggregate (the Gross Lookback Amount), shall be reduced by the following items to arrive at the Net Lookback Amount:

(i) Actual cash contributions to the Trust, including the Additional Payments and the Distributions paid to the Trust prior to the date the Net Lookback Amount is paid to the Trust;

(ii) The value of the Preferred Interests as of January 1, 2018, that is not in excess of 10% of the total value of the Trust's assets, and for the purpose of this clause (ii), the determination of the total value of the Trust's assets includes the actual cash contributions to the Trust, such as cash contributions made in connection with the Lump Sum Payments and Distributions (including contribution receivables); and

(iii) Any consideration paid to the Trust pursuant to any exercise of the Put or Call Options at any time prior to the date the Net Lookback Amount is paid to the Trust;

(e) An Independent Fiduciary, acting solely on behalf of the Plan and the Trust, represents the Plan's interests for all purposes with respect to the Preferred Interests, and determines, prior to entering into any of the transactions described in Section I (a)–(g), that each such transaction is in the interest of the Plan.

(f) The Independent Fiduciary will have complete discretion regarding the disposition of AT&T Shares in accordance with the IMA and the Registration Rights Agreement;

(g) The Independent Fiduciary negotiated and approved, on behalf of the Plan and the Trust, the terms and conditions of the Contribution Agreement, including the terms of the Preferred Interests, the Call Option and the Put Option, as well as the terms of the IMA and Registration Rights Agreement;

(h) The Independent Fiduciary manages the holding and disposition of the Preferred Interests and takes whatever actions it deems necessary to protect the rights of the Plan with respect to the Preferred Interests or the AT&T Shares received in connection with the exercise of the Call Option or the Put Option;

(i) The Independent Fiduciary monitors the credit rating of AT&T Inc. for purposes of determining whether the Put Option is triggered due to AT&T Inc. being rated below investment grade for two consecutive calendar quarters by at least two of the following rating agencies: Standard & Poor's Ratings Services, Moody's Investor Services, Inc. or FitchRatings, Inc.;

(j) An Independent Appraiser, acting on behalf of the Plan, determines the fair market value of the Preferred Interests contributed to the Trust on behalf of the Plan as of the date of the Contribution and while the Preferred Interests are held on behalf of the Plan, and for all purposes under this exemption, if granted, consistent with sound principles of valuation;

(k) The Preferred Interests rank senior to any other equity holders of the Issuer in respect of: The right to receive Distributions; and the right to receive Distributions or payments out of the assets of the Issuer upon liquidation of the Issuer, in accordance with the terms of the Contribution Agreement;

(l) In the event that the Distributions are in arrears, AT&T is restricted from making certain transfers of cash out of the Issuer or declaring dividends on and repurchasing shares of AT&T stock, in accordance with the terms of the Contribution Agreement;

(m) The Committee and the Independent Fiduciary maintain for a period of six (6) years from the date any Preferred Interests are contributed to the Trust, for a period of six (6) years from the date of any disposition of Preferred Interests by the Trust or the purchase of Preferred Interests by AT&T, and for a period of six (6) years from the last date that the Trust holds AT&T Shares received in connection with the exercise of the Put Option or the Call Option in violation of section 406(a)(2) of ERISA, in a manner that is convenient and accessible for audit and examination, the records necessary to enable the persons described in paragraph (n)(1) below to determine whether conditions of this exemption have been met, except that (i) a prohibited transaction will not be considered to have occurred if, due to circumstances beyond the control of the Committee and/or the Independent Fiduciary, the records are lost or destroyed prior to the end of the six-year period, and (ii) no party in interest other than the Committee or the Independent Fiduciary shall be subject to the civil penalty that may be assessed under ERISA section 502(i) if the records are not maintained, or are not available for examination as required by paragraph (n) below; and

(n)(1) Except as provided in section (2) of this paragraph and not withstanding any provisions of subsections (a)(2) and (b) of section 504 of ERISA, the records referred to in paragraph (m) above shall be unconditionally available at their

customary location during normal business hours to:

(i) any duly authorized employee or representative of the Department or the Internal Revenue Service;

(ii) AT&T or any duly authorized representative of AT&T;

(iii) the Independent Fiduciary or any duly authorized representative of the Independent Fiduciary;

(iv) the Committee or any duly authorized representative of the Committee; and

(v) any participant or beneficiary of the Plan, or any duly authorized representative of such participant or beneficiary;

(2) None of the persons described above in paragraph (n)(1) (iii) or (v) shall be authorized to examine the trade secrets of AT&T or commercial or financial information that is privileged or confidential, and should AT&T refuse to disclose information on the basis that such information is exempt from disclosure; AT&T shall by the close of the thirtieth (30th) day following the request, provide a written notice advising that person of the reasons for the refusal and that the Department may request such information.

III. Definitions

For purposes of this proposed exemption:

(a) The term ''Affiliate'' means:

(1) Any person directly or indirectly through one or more intermediaries, controlling, controlled by, or under common control with the person;

(2) Any officer, director, employee, relative, or partner in any such person;

(3) Any corporation or partnership of which such person is an officer, director, partner, or employee.

For the purposes of clause (a)(1) above, the term ''control'' means the power to exercise a controlling influence over the management or policies of a person other than an individual.

(b) The term ''Committee'' means the AT&T Inc. Benefit Plan Investment Committee, which has been delegated the power and authority to appoint and remove trustees and investment managers, and to enter into and amend trust agreements and other agreements relating to the management of Plan assets and, in respect of such power and authority, has been designated by AT&T Services, Inc. as a ''named fiduciary'' of the Plan.

(c) The term ''Trust'' means the SBC Master Pension Trust, established and maintained pursuant to an agreement between AT&T Inc. and JPMorgan Chase Bank, N.A., as amended and restated effective as of February 1, 2012.

(d) The term ''IMA'' means the Investment Management Agreement by and between AT&T Services, Inc., the AT&T Benefit Plan Investment Committee, AT&T Inc. and Brock Fiduciary Services LLC, effective on or about September 9, 2013.

(e) The term ''Contribution Agreement'' means the Contribution Agreement between Brock Fiduciary Services LLC, JPMorgan Chase Bank, N.A., as Directed Trustee of the Trust, AT&T Inc. and AT&T Mobility II LLC, dated August 30, 2013, which, among other things, sets forth the terms and conditions of the Contribution, the Put Option and the Call Option.

(f) The term ''Registration Rights Agreement'' means the Registration Rights Agreement by and among AT&T Inc. the SBC Master Pension Trust and Brock Fiduciary Services LLC, as Independent Fiduciary and investment manager with respect to the AT&T Pension Benefit Plan, a participating plan in the SBC Master Pension Trust, dated August 30, 2013.

(g) The term ''Change of Control'' means (i) the occurrence of any merger, reorganization or other transaction that results in AT&T, directly or indirectly, owning less than fifty percent of the capital or profits interests (where the Issuer remains taxable as a partnership), or equity (if the Issuer becomes taxable as a corporation), of the Issuer, exclusive of the Preferred Interests, or (ii) a transfer of fifty percent or more of the Plan liabilities and Trust assets to an entity not under common control with AT&T Inc.

(h) The term ''Independent Fiduciary'' means Brock Fiduciary Services LLC and any other fiduciary who (1) is independent or unrelated to AT&T Inc. and its affiliates and has the appropriate training, experience, and facilities to act on behalf of the Plan regarding the covered transactions in accordance with the fiduciary duties and responsibilities prescribed by ERISA (including, if necessary, the responsibility to seek the counsel of knowledgeable advisors to assist in its compliance with ERISA), and (2) if relevant, succeeds Brock Fiduciary Services LLC pursuant to the terms of the Investment Management Agreement, Independent Fiduciary Agreement, or other relevant agreement. The Independent Fiduciary will not be deemed to be independent of and unrelated to AT&T Inc. and its affiliates if: (i) Such fiduciary directly or indirectly controls, is controlled by or is under common control, with AT&T and its affiliates; (ii) such fiduciary directly or indirectly receives any compensation or other consideration in connection with any transaction described in this proposed exemption other than for acting as an Independent Fiduciary in connection with the transactions described herein, provided that the amount or payment of such compensation is not contingent upon, or in any way affected by, the Independent Fiduciary's ultimate decision; and (iii) the annual gross revenue received by the Independent Fiduciary, during any year of its engagement, from AT&T Inc. and its affiliates, exceeds two percent (2%) of the Independent Fiduciary's annual gross revenue from all sources (for federal income tax purposes) for its prior tax year. For the purpose of this Section III(h), the term ''control'' has the meaning set forth in Section III(a) above.

(i) The term ''Put Option'' means the right of the Independent Fiduciary to require AT&T to purchase the Preferred Interests from the Trust, pursuant to the terms and conditions set forth in the Contribution Agreement, at the Option Price per Preferred Interest at any time and from time to time on or after the earliest of: (1) The first date that the Issuer's debt-to-total-capitalization ratio (as defined in the Contribution Agreement) exceeds that of AT&T; (2) the date on which AT&T, Inc. is rated below investment grade for two consecutive calendar quarters by at least two of the following rating agencies: (x) Standard & Poor's Ratings Services, (y) Moody's Investor Services, Inc., or (z) FitchRatings, Inc.; (3) a Change of Control; or (4) the seventh anniversary of the date on which the Preferred Interests are contributed to the Trust.

(j) The term ''Call Option'' means the right of AT&T to purchase all or any portion of the Preferred Interests from the Trust, pursuant to the terms and conditions set forth in the Contribution Agreement, at a price per Preferred Interest equal to the Option Price per Preferred Interest, at any time and from time to time: (1) During the twelve month period following the date AT&T issues an annual report reflecting that the Plan is fully funded as determined under U.S. GAAP and calculated by including the fair market value of the Preferred Interests; (2) on or after a Change of Control; or (3) on or after the fifth anniversary of the date on which the Preferred Interests are contributed to the Trust.

(k) The term ''Trustee'' means JPMorgan Chase Bank, N.A. or any successor trustee retained by the Trust to hold the assets of the Trust, acting solely as a directed trustee with no discretionary authority over the investment of Trust assets.

(l) The term ''Option Price'' means an amount equal to the greater of: (1) The fair market value of the Preferred

Interest, determined by the Independent Fiduciary as of the last date of the calendar quarter preceding the date of notice of exercise of a Call Option or Put Option, as the case may be, without regard to the occurrence of any prior event described in clauses (1) or (2) of the definition of Call Option or in clauses (1) through (3) of the definition of Put Option, or, for the portion of Preferred Interests that are not immediately purchased by AT&T pursuant to the Put Option because of the limitation on AT&T's obligation to purchase the Preferred Interests pursuant to the Put Option to no more than 106,666,667 Preferred Interests in any twelve month period, the fair market value of the Preferred Interest, determined by the Independent Fiduciary as of the last date of the calendar quarter immediately preceding the date such portion of the Preferred Interest is actually purchased by AT&T Inc., without regard to the occurrence of any prior event described in clauses (1) or (2) of the definition of Call Option or in clauses (1) through (3) of the definition of Put Option; and (2) the sum of $25.00 (*i.e.,* $8 billion in the aggregate) plus any accrued and unpaid Distributions.

(m) The term ''Independent Fiduciary Agreement'' means the Independent Fiduciary Agreement dated May 1, 2012, as amended, by and among AT&T Services, AT&T Inc. and Brock.

(n) The term ''Independent Appraiser'' means an individual or entity meeting the definition of a ''Qualified Independent Appraiser'' under 25 CFR 2570.31(i) retained to determine, on behalf of the Plan, the fair market value of the Preferred Interests as of the date of the Contribution and while the Preferred Interests are held on behalf of the Plan. For avoidance of doubt, the Independent Appraiser may be the Independent Fiduciary, provided it qualifies as a Qualified Independent Appraiser.

Signed at Washington, DC, this 3rd day of September, 2013.

Lyssa Hall,

Director of Exemption Determinations, Employee Benefits Security Administration, U.S. Department of Labor.

[FR Doc. 2013–21801 Filed 9–6–13; 8:45 am]

BILLING CODE 4510–29–P

DEPARTMENT OF LABOR

Employment and Training Administration

Native American Employment and Training Council (Council) Charter; Notice of Intent To Renew

AGENCY: Employment and Training Administration, Labor.

ACTION: Notice of Intent to Renew the Native American Employment and Training Council (Council) Charter.

SUMMARY: Notice is hereby given regarding the renewal of the Workforce Investment Act (WIA), Section 166 Indian and Native American program Charter that is necessary and in the public interest. Accordingly, the U.S. Department of Labor (the Department), Employment and Training Administration (ETA) intends to renew the Council Charter with revisions. The revisions are not intended to change the purpose or the Council's original intent. The revisions includes language regarding membership diversity and changes to the terms of members. The charter for the Council will expire on August 31, 2013.

SUPPLEMENTARY INFORMATION:

Background: Pursuant to WIA Section 166(h)(4)(C), the Council advises the Secretary on all aspects of the operation and administration of the Native American programs authorized under the Workforce Investment Act (WIA) Section 166. In addition, the Council advises the Secretary on matters that promote the employment and training needs of American Indians and Native Americans, as well as enhance the quality of life in accordance with the Indian Self-Determination Act and Education Assistance Act. The Council shall also provide guidance to the Secretary on ways for Indians, Alaska Natives, and Native Hawaiians to successfully access and obtain Department discretionary funding and participate in special initiatives.

The charter is required to be renewed every two years; the previous charter expired on August 31, 2013. The Council continues to assist ETA and the Secretary to administer WIA Section 166 program policy.

Summary of Revisions: Due to Federal Advisory Committee Act (FACA) requirements and budgetary constraints, there are two changes that have been made to the charter: First, due to reduced funding under sequestration, the estimated annual operating cost of $110,000 is reduced to $100,000. Utilizing new and improved technologies, (teleconferences and virtual meetings) will allow the Department of Labor (DOL) to conduct conferences and meetings from a distance and reduce overall travel cost. Second, the membership section was modified to enact term limits for the chairperson and vice chairperson. Adding a limitation on terms allows: (1) The Council to create a rolling influx of new ideas and perspectives; (2) for an equitable distribution of influence with the Council leadership; (3) opportunity for current members to take on more of a leadership role; (4) flexibility to maintain a healthy Council balance of experience and fresh ideas, and further accommodates changes in membership due to retirements, member withdrawals, or resignations; and, (5) the prevention of too many individuals representing one interest. The reduction in funding and term limits will have no impact on the Council's role. All council members shall serve at the pleasure of the Secretary and members may be appointed, reappointed, and/or replaced, and their terms may be extended, changed, or terminated at the Secretary's discretion.

FOR FURTHER INFORMATION CONTACT: Mrs. Evangeline M. Campbell, Designated Federal Officer, Division of Indian and Native American Program, Office of Workforce Investment, Employment and Training Administration, U.S. Department of Labor, Room S–4209, 200 Constitution Avenue NW., Washington, DC 20210. Telephone: (202) 693–3737, (this is not a toll-free number).

Signed at Washington, DC, this 29th day of August 2013.

Eric M. Seleznow,

Acting Assistant Secretary, Employment and Training Administration.

[FR Doc. 2013–21852 Filed 9–6–13; 8:45 am]

BILLING CODE 4510–FR–P

DEPARTMENT OF LABOR

Occupational Safety and Health Administration

[Docket No. OSHA–2009–0043]

Access to Employee Exposure and Medical Records; Extension of the Office of Management and Budget's (OMB) Approval of Information Collection (Paperwork) Requirements

AGENCY: Occupational Safety and Health Administration (OSHA), Labor.

ACTION: Request for public comments.

SUMMARY: OSHA solicits public comments concerning its proposal to extend the Office of Management and Budget's (OMB) approval of the

information collection requirements specified in the Access to Employee Exposure and Medical Records Standard (29 CFR 1910.1020).

DATES: Comments must be submitted (postmarked, sent, or received) by November 8, 2013.

ADDRESSES:

Electronically: You may submit comments and attachments electronically at *http://www.regulations.gov,* which is the Federal eRulemaking Portal. Follow the instructions online for submitting comments.

Facsimile: If your comments, including attachments, are not longer than 10 pages, you may fax them to the OSHA Docket Office at (202) 693–1648.

Mail, Hand Delivery, Express Mail, Messenger, or Courier Service: When using this method, you must submit a copy of your comments and attachments to the OSHA Docket Office, Docket No. OSHA–2009–0043, Occupational Safety and Health Administration, U.S. Department of Labor, Room N–2625, 200 Constitution Avenue NW., Washington, DC 20210. Deliveries (hand, express mail, messenger, and courier service) are accepted during the Department of Labor's and Docket Office's normal business hours, 8:15 a.m. to 4:45 p.m., e.t.

Instructions: All submissions must include the Agency name and OSHA docket number (OSHA–2009–0043) for the Information Collection Request (ICR). All comments, including any personal information you provide, are placed in the public docket without change, and may be made available online at *http://www.regulations.gov.* For further information on submitting comments see the ''Public Participation'' heading in the section of this notice titled **SUPPLEMENTARY INFORMATION.**

Docket: To read or download comments or other material in the docket, go to *http://www.regulations.gov* or the OSHA Docket Office at the address above. All documents in the docket (including this **Federal Register** notice) are listed in the *http://www.regulations.gov* index; however, some information (e.g., copyrighted material) is not publicly available to read or download from the Web site. All submissions, including copyrighted material, are available for inspection and copying at the OSHA Docket Office. You may also contact Theda Kenney at the address below to obtain a copy of the ICR.

FOR FURTHER INFORMATION CONTACT: Theda Kenney or Todd Owen, Directorate of Standards and Guidance, OSHA, U.S. Department of Labor, Room N–3609, 200 Constitution Avenue NW., Washington, DC 20210; telephone (202) 693–2044.

SUPPLEMENTARY INFORMATION:

I. Background

The Department of Labor, as part of its continuing effort to reduce paperwork and respondent (i.e., employer) burden, conducts a preclearance consultation program to provide the public with an opportunity to comment on proposed and continuing information collection requirements in accord with the Paperwork Reduction Act of 1995 (44 U.S.C. 3506(c)(2)(A)). This program ensures that information is in the desired format, reporting burden (time and costs) is minimal, collection instruments are clearly understood, and OSHA's estimate of the information collection burden is accurate. The Occupational Safety and Health Act of 1970 (the OSH Act) (29 U.S.C. 651 *et seq.*) authorizes information collection by employers as necessary or appropriate for enforcement of the Act or for developing information regarding the causes and prevention of occupational injuries, illnesses, and accidents (29 U.S.C. 657). The OSH Act also requires OSHA to obtain such information with minimum burden upon employers, especially those operating small businesses, and to reduce to the maximum extent feasible, unnecessary duplication of efforts in obtaining information (29 U.S.C. 657).

Under the authority granted by the OSH Act, OSHA published a health regulation governing access to employee exposure monitoring data and medical records. This regulation does not require employers to collect any information or to establish any new systems of records. Rather, it requires that employers provide workers, their designated representatives, and OSHA with access to employee exposure monitoring and medical records, and any analyses resulting from these records that employers must maintain under OSHA's toxic chemical and harmful physical agent standards. In this regard, the regulation specifies requirements for record access, record retention, worker information, trade secret management, and record transfer. Accordingly, the Agency attributes the burden hours and costs associated with exposure monitoring and measurement, medical surveillance, and the other activities required to generate the data governed by the regulation to the health standards that specify these activities; therefore, OSHA did not include these burden hours and costs in this ICR.

Access to exposure and medical information enables employees and their designated representatives to become directly involved in identifying and controlling occupational health hazards, as well as managing and preventing occupationally-related health impairment and disease. Providing the Agency with access to the records permits it to ascertain whether or not employers are complying with the regulation, as well as the recordkeeping requirements of its other health standards; therefore, OSHA access provides additional assurance that workers and their designated representatives are able to obtain the data they need to conduct their analyses.

II. Special Issues for Comment

OSHA has a particular interest in comments on the following issues:

- Whether the proposed information collection requirements are necessary for the proper performance of the Agency's functions, including whether the information is useful;
- The accuracy of OSHA's estimate of the burden (time and costs) of the information collection requirements, including the validity of the methodology and assumptions used;
- The quality, utility, and clarity of the information collected; and
- Ways to minimize the burden on employers who must comply; for example, by using automated or other technological information collection and transmission techniques.

III. Proposed Actions

The Agency is requesting an adjustment increase of 65,522 burden hours from 664,993 to 730,515 hours. This increase is the result of an adjustment in the number of establishments used in this analysis increasing from 690,591 to 759,668, a total adjustment of 69,077. The Agency will summarize the comments submitted in response to this notice, and will include this summary in its response to OMB.

Type of Review: Extension of a currently approved collection.

Title: Access to Employee Exposure and Medical Records (29 CFR 1910.1020).

OMB Control Number: 1218–0065.

Affected Public: Business or other for-profits; Not-for-profit organizations; Federal Government; State, Local, or Tribal Government.

Number of Respondents: 759,668.

Total Responses: 6,548,554.

Frequency of Responses: Initially, Annually, On occasion.

Average Time per Response: Varies from 5 minutes (.08 hour) for a manager

to respond to a request to 1 hour (1.0) for a manager to prepare necessary documentation.

Estimated Total Burden Hours: 730,515.

Estimated Cost (Operation and Maintenance): $0.

IV. Public Participation—Submission of Comments on this Notice and Internet Access to Comments and Submissions

You may submit comments in response to this document as follows: (1) Electronically at *http://www.regulations.gov,* which is the Federal eRulemaking Portal; (2) by facsimile (fax); or (3) by hard copy. All comments, attachments, and other material must identify the Agency name and the OSHA docket number for the ICR (Docket No. OSHA–2009–0043). You may supplement electronic submissions by uploading document files electronically. If you wish to mail additional materials in reference to an electronic or facsimile submission, you must submit them to the OSHA Docket Office (see the section of this notice titled **ADDRESSES**). The additional materials must clearly identify your electronic comments by your name, date, and the docket number so the Agency can attach them to your comments.

Because of security procedures, the use of regular mail may cause a significant delay in the receipt of comments. For information about security procedures concerning the delivery of materials by hand, express delivery, messenger, or courier service, please contact the OSHA Docket Office at (202) 693–2350, (TTY (877) 889–5627). Comments and submissions are posted without change at *http://www.regulations.gov.* Therefore, OSHA cautions commenters about submitting personal information such as social security numbers and dates of birth. Although all submissions are listed in the *http://www.regulations.gov* index, some information (e.g., copyrighted material) is not publicly available to read or download through this Web site.

All submissions, including copyrighted material, are available for inspection and copying at the OSHA Docket Office. Information on using the *http://www.regulations.gov* Web site to submit comments and access the docket is available at the Web site's ''User Tips'' link. Contact the OSHA Docket Office for information about materials not available through the Web site, and for assistance in using the Internet to locate docket submissions.

V. Authority and Signature

David Michaels, Ph.D., MPH, Assistant Secretary of Labor for Occupational Safety and Health, directed the preparation of this notice. The authority for this notice is the Paperwork Reduction Act of 1995 (44 U.S.C. 3506 *et seq.*) and Secretary of Labor's Order No. 1–2012 (77 FR 3912, January 25, 2012).

Signed at Washington, DC, on September 3, 2013.

David Michaels,

Assistant Secretary of Labor for Occupational Safety and Health.

[FR Doc. 2013–21817 Filed 9–6–13; 8:45 am]

BILLING CODE 4510–26–P

NATIONAL CREDIT UNION ADMINISTRATION

Sunshine Act Meeting

TIME AND DATE: 10:00 a.m., Thursday, September 12, 2013.

PLACE: Board Room, 7th Floor, Room 7047, 1775 Duke Street (All visitors must use Diagonal Road Entrance), Alexandria, VA 22314–3428.

STATUS: Open.

MATTERS TO BE CONSIDERED:

1. NCUA's Rules and Regulations, Federal Credit Union Ownership of Fixed Assets.

2. Request from Peoples Advantage Federal Credit Union to Expand its Community Charter.

3. NCUA's Rules and Regulations, Authorizing Charitable Donation Accounts.

RECESS: 10:30 a.m.

TIME AND DATE: 10:45 a.m., Thursday, September 12, 2013.

PLACE: Board Room, 7th Floor, Room 7047, 1775 Duke Street, Alexandria, VA 22314–3428.

STATUS: Closed.

MATTERS TO BE CONSIDERED:

1. Consideration of Supervisory Activities. Closed pursuant to the following exemption: (8).

FOR FURTHER INFORMATION CONTACT: Gerard Poliquin, Secretary of the Board, Telephone: 703–518–6304.

Gerard Poliquin,

Secretary of the Board.

[FR Doc. 2013–22007 Filed 9–5–13; 4:15 pm]

BILLING CODE 7535–01–P

NATIONAL SCIENCE FOUNDATION

National Science Board; Sunshine Act Meetings; Notice

The National Science Board's *ad hoc* Committee on Nominations for the NSB Class of 2014–2020, pursuant to NSF regulations (45 CFR part 614), the National Science Foundation Act, as amended (42 U.S.C. 1862n–5), and the Government in the Sunshine Act (5 U.S.C. 552b), hereby gives notice in regard to the scheduling of a meeting for the transaction of National Science Board business, as follows:

DATE AND TIME: Thursday, September 12, 2013 at 10:30 a.m. EDT.

SUBJECT MATTER: Consideration of nominations for the NSB class of 2014–2020.

STATUS: Closed.

This meeting will be held by teleconference originating at the National Science Board Office, National Science Foundation, 4201 Wilson Blvd., Arlington, VA 22230.

Please refer to the National Science Board Web site (*www.nsf.gov/nsb*) for information or schedule updates, or contact: Ann Bushmiller, National Science Foundation, 4201 Wilson Blvd., Arlington, VA 22230. Telephone: (703) 292–7000.

Ann Bushmiller,

NSB Senior Legal Counsel.

[FR Doc. 2013–21968 Filed 9–5–13; 11:15 am]

BILLING CODE 7555–01–P

NEIGHBORHOOD REINVESTMENT CORPORATION

Regular Board of Directors Meeting; Sunshine Act Meeting

TIME AND DATE: 2:00 p.m., Tuesday, September 24, 2013.

PLACE: 999 North Capitol St NE., Suite 900, Gramlich Boardroom, Washington, DC 20002.

STATUS: Open.

CONTACT PERSON FOR MORE INFORMATION: Erica Hall, Assistant Corporate Secretary (202) 220–2376; *ehall@nw.org.*

AGENDA:

I. Call To Order.
II. Recognize Steve Tuminaro Service.
III. Approval of Minutes.
IV. Executive Session.
V. FY14 Preliminary Budget & Budget Update.
VI. Settlement Opportunity.
VII. DC Office Final Report.
VIII. FY13 Milestone Report & Dashboard.
IX. LIFT & LIFT 2.0.

X. Community Impact Measures.
XI. MHA, NFMC & EHLP Reports.
XII. Adjournment.

Erica Hall,

Assistant Corporate Secretary.

[FR Doc. 2013–21914 Filed 9–5–13; 8:45 am]

BILLING CODE 7570–02–P

NUCLEAR REGULATORY COMMISSION

[NRC–2013–0203]

Ultimate Heat Sink for Nuclear Power Plants; Draft Regulatory Guide

AGENCY: Nuclear Regulatory Commission.

ACTION: Draft regulatory guide; request for comment.

SUMMARY: The U.S. Nuclear Regulatory Commission (NRC) is issuing for public comment draft regulatory guide (DG), DG–1275, ''Ultimate Heat Sink for Nuclear Power Plants.'' This regulatory guide (RG) describes methods and procedures acceptable to the NRC staff that nuclear power plant facility licensees and applicants may use to implement general design criteria (GDC) that are applicable to the ultimate heat sink (UHS) features of plant systems.

DATES: Submit comments by November 8, 2013. Comments received after this date will be considered if it is practical to do so, but the NRC is able to ensure consideration only for comments received on or before this date. Although a time limit is given, comments and suggestions in connection with items for inclusion in guides currently being developed or improvements in all published guides are encouraged at any time.

ADDRESSES: You may submit comment by any of the following methods (unless this document describes a different method for submitting comments on a specific subject):

- Federal Rulemaking Web site: Go to *http://www.regulations.gov* and search for Docket ID NRC–2013–0203. Address questions about NRC dockets to Carol Gallagher; telephone: 301–287–3422; email: *Carol.Gallagher@nrc.gov.* For technical questions, contact the individual(s) listed in the **FOR FURTHER INFORMATION CONTACT** section of this document.
- Mail comments to: Cindy Bladey, Chief, Rules, Announcements, and Directives Branch (RADB), Office of Administration, Mail Stop: 3WFN, 06–44M, U.S. Nuclear Regulatory Commission, Washington, DC 20555–0001.

For additional direction on accessing information and submitting comments, see ''Accessing Information and Submitting Comments'' in the **SUPPLEMENTARY INFORMATION** section of this document.

FOR FURTHER INFORMATION CONTACT: Hector Rodriguez-Luccioni, telephone: 301–251–7685, email: *Hector.Rodriguez-Luccioni@nrc.gov,* or Bruce Lin, telephone: 301–251–7653, email: *Bruce.Lin@nrc.gov.* Both of the Office of Nuclear Regulatory Research, U.S. Nuclear Regulatory Commission, Washington, DC 20555–0001.

SUPPLEMENTARY INFORMATION:

I. Accessing Information and Submitting Comments

A. Accessing Information

Please refer to Docket ID NRC–2013–0203 when contacting the NRC about the availability of information regarding this document. You may access publicly-available information related to this action by the following methods:

- Federal Rulemaking Web site: Go to *http://www.regulations.gov* and search for Docket ID NRC–2013–0203.
- NRC's Agencywide Documents Access and Management System (ADAMS): You may access publicly-available documents online in the NRC Library at *http://www.nrc.gov/reading-rm/adams.html.* To begin the search, select ''*ADAMS Public Documents*'' and then select ''*Begin Web-based ADAMS Search.*'' For problems with ADAMS, please contact the NRC's Public Document Room (PDR) reference staff at 1–800–397–4209, 301–415–4737, or by email to *pdr.resource@nrc.gov.* The draft regulatory guide is available electronically in ADAMS under Accession No. ML13043A624. The regulatory analysis may be found in ADAMS under Accession No. ML13043A628.

Regulatory guides are not copyrighted, and NRC approval is not required to reproduce them.

- NRC's PDR: You may examine and purchase copies of public documents at the NRC's PDR, Room O1–F21, One White Flint North, 11555 Rockville Pike, Rockville, Maryland 20852.

B. Submitting Comments

Please include Docket ID NRC–2013–0203 in the subject line of your comment submission, in order to ensure that the NRC is able to make your comment submission available to the public in this docket.

The NRC cautions you not to include identifying or contact information that you do not want to be publicly disclosed in your comment submission. The NRC posts all comment submissions at *http://www.regulations.gov* as well as entering the comment submissions into ADAMS. The NRC does not routinely edit comment submissions to remove identifying or contact information.

If you are requesting or aggregating comments from other persons for submission to the NRC, then you should inform those persons not to include identifying or contact information that they do not want to be publicly disclosed in their comment submission. Your request should state that the NRC does not routinely edit comment submissions to remove such information before making the comment submissions available to the public or entering the comment submissions into ADAMS.

II. Additional Information

The NRC is issuing for public comment a draft guide in the NRC's ''Regulatory Guide'' series. This series was developed to describe and make available to the public such information as methods that are acceptable to the NRC staff for implementing specific parts of the NRC's regulations, techniques that the staff uses in evaluating specific problems or postulated accidents, and data that the staff needs in its review of applications for permits and licenses.

The draft regulatory guide, entitled, ''Ultimate Heat Sink for Nuclear Power Plants,'' is temporarily identified by its task number, DG–1275. The DG–1275 is proposed revision 3 of Regulatory Guide 1.27, dated January 1976.

This regulatory guide describes methods and procedures acceptable to the NRC staff that nuclear power plant facility licensees and applicants may use to implement general design criteria that are applicable to the ultimate heat sink features of plant systems.

American National Standard Institute/American Nuclear Society (ANSI/ANS) Standard 2.21–2012, ''Criteria for Assessing Atmospheric Effects on the Ultimate Heat Sink,'' has been reviewed for applicability to this guide. This ANSI/ANS standard describes atmospheric effects for consideration when designing ultimate heat sinks for safety-related systems at nuclear power plants. Guidance from the ANSI/ANS standard has been incorporated in this guide where appropriate. The NRC staff review of ANSI/ANS 2.21–2012 and DG 1275 criteria for assessing atmospheric effect on the ultimate heat sink is documented and can be found in ADAMS (ML13043A627).

IV. Backfitting and Issue Finality

Draft Regulatory Guide 1.27 provides guidance on one possible means for meeting NRC's regulatory requirements of the general design criteria (GDC) in appendix A, ''General Design Criteria for Nuclear Power Plants,'' to part 50 of Title 10 of the *Code of Federal Regulations* (10 CFR), which are applicable to the ultimate heat sink features of nuclear power plant systems. This draft regulatory guide, if finalized, would not constitute backfitting as defined in 10 CFR 50.109 (the Backfit Rule) and is not otherwise inconsistent with the issue finality provisions in 10 CFR part 52, ''Licenses, Certifications and Approvals for Nuclear Power Plants.'' The NRC's position is based upon the following considerations.

Draft Regulatory Guide 1.27 may be applied to current applications for operating licenses, combined licenses, early site permits, and certified design rules docketed by the NRC as of the date of issuance of the final regulatory guide, as well as future applications submitted after the issuance of the regulatory guide. Such action would not constitute backfitting as defined in 10 CFR 50.109(a)(1) or be otherwise inconsistent with the applicable issue finality provision in 10 CFR part 52. Neither the Backfit Rule nor the issue finality provisions under Part 52—with certain exclusions discussed below—were intended to apply to every NRC action which substantially changes the expectations of current and future applicants.

The exceptions to the general principle are applicable whenever a combined license applicant references a part 52 license (e.g., an early site permit) or NRC regulatory approval (e.g., a design certification rule) with specified issue finality provisions. The NRC does not, at this time, intend to impose the positions represented in draft Regulatory Guide 1.27 on combined license applicants in a manner that is inconsistent with any issue finality provisions. If, in the future, the NRC seeks to impose a position in Regulatory Guide 1.27 in a manner which does not provide issue finality as described in the applicable issue finality provision, then the NRC must address the criteria for avoiding issue finality as described in the applicable issue finality provision.

Existing part 50 construction permit holders and part 50 operating license holders would not be required to comply with the positions set forth in draft Regulatory Guide 1.27, unless the construction permit or operating license holder makes a voluntary change to its licensing basis with respect to the ultimate heat sink (UHS) features of plant systems and the NRC determines that the safety review must include consideration of the ultimate heat sink (UHS) features of plant systems.

Existing design certification rules would not be required to be amended to comply with the positions set forth in draft Regulatory Guide 1.27, unless the NRC addresses the issue finality provisions in 10 CFR 52.63(a).

Existing combined license holders (referencing the AP1000 design certification rule in 10 CFR part 52, appendix D), would not be required to comply with the positions set forth in draft Regulatory Guide 1.27, unless the NRC addresses the issue finality provisions in 10 CFR 52.63(a).

Further information on the staff's use of the draft regulatory guide, if finalized, is contained in Regulatory Guide 1.27 under section D. *Implementation.*

Dated at Rockville, Maryland, this 26th day of August, 2013.

For the Nuclear Regulatory Commission.

Thomas H. Boyce,

Chief, Regulatory Guide Development Branch, Division of Engineering, Office of Nuclear Regulatory Research.

[FR Doc. 2013–21847 Filed 9–6–13; 8:45 am]

BILLING CODE 7590–01–P

NUCLEAR REGULATORY COMMISSION

[NRC–2013–0202]

Seismic Instrumentation for Nuclear Power Plants

AGENCY: Nuclear Regulatory Commission.

ACTION: Standard review plan-draft section revision; request for comment.

SUMMARY: The U.S. Nuclear Regulatory Commission (NRC) seeks public comments on the proposed revisions to the following section in Chapter 3, ''Design of Structures, Components, Equipment, and Systems'' and soliciting public comment on NUREG–0800, ''Standard Review Plan for the Review of Safety Analysis Reports for Nuclear Power Plants: LWR Edition,'' Section 3.7.4, ''Seismic Instrumentation.''

DATES: Submit comments by October 9, 2013. Comments received after this date will be considered, if it is practical to do so, but the Commission is able to ensure consideration only for comments received on or before this date.

ADDRESSES: You may submit comment by any of the following methods (unless this document describes a different method for submitting comments on a specific subject):

- *Federal Rulemaking Web site:* Go to *http://www.regulations.gov* and search for Docket ID NRC–2013–0202. Address questions about NRC dockets to Carol Gallagher; telephone: 301–287–3422; email: *Carol.Gallagher@nrc.gov.* For technical questions, contact the individual(s) listed in the **FOR FURTHER INFORMATION CONTACT** section of this document.
- *Mail comments to:* Cindy Bladey, Chief, Rules, Announcements, and Directives Branch (RADB), Office of Administration, Mail Stop: 3WFN, 06–44M, U.S. Nuclear Regulatory Commission, Washington, DC 20555–0001.

For additional direction on accessing information and submitting comments, see ''Accessing Information and Submitting Comments'' in the **SUPPLEMENTARY INFORMATION** section of this document.

FOR FURTHER INFORMATION CONTACT: Jonathan DeGange, Office of New Reactors, U.S. Nuclear Regulatory Commission, Washington, DC 20555–0001, telephone: 301–415–6992, email: *Jonathan.DeGange@nrc.gov.*

SUPPLEMENTARY INFORMATION:

I. Accessing Information and Submitting Comments

A. Accessing Information

Please refer to Docket ID NRC–2013–0202 when contacting the NRC about the availability of information regarding this document. You may access publicly-available information related to this action by the following methods:

- *Federal Rulemaking Web site:* Go to *http://www.regulations.gov* and search for Docket ID NRC–2013–0202.
- *NRC's Agencywide Documents Access and Management System (ADAMS):* You may access publicly-available documents online in the NRC Library at *http://www.nrc.gov/reading-rm/adams.html.* To begin the search, select ''*ADAMS Public Documents*'' and then select ''*Begin Web-based ADAMS Search.*'' For problems with ADAMS, please contact the NRC's Public Document Room (PDR) reference staff at 1–800–397–4209, 301–415–4737, or by email to *pdr.resource@nrc.gov.* The ADAMS Accession numbers for the redline document comparing the current revision and the proposed revision are available in ADAMS under Accession Nos. Section 3.7.4 Proposed Revision 3 (ML12304A031), Current Revision 2 (ML070460349) and Redline (ML12304A035).
- *NRC's PDR:* You may examine and purchase copies of public documents at the NRC's PDR, Room O1–F21, One

White Flint North, 11555 Rockville Pike, Rockville, Maryland 20852.

B. Submitting Comments

Please include Docket ID NRC–2013–0202 in the subject line of your comment submission, in order to ensure that the NRC is able to make your comment submission available to the public in this docket.

The NRC cautions you not to include identifying or contact information that you do not want to be publicly disclosed in your comment submission. The NRC posts all comment submissions at *http://www.regulations.gov* as well as entering the comment submissions into ADAMS. The NRC does not routinely edit comment submissions to remove identifying or contact information.

If you are requesting or aggregating comments from other persons for submission to the NRC, then you should inform those persons not to include identifying or contact information that they do not want to be publicly disclosed in their comment submission. Your request should state that the NRC does not routinely edit comment submissions to remove such information before making the comment submissions available to the public or entering the comment submissions into ADAMS.

II. Further Information

The Office of New Reactors and Office of Nuclear Reactor Regulation proposes to revise Section 3.7.4 in Chapter 3 of NUREG–0800, ''Standard Review Plan for the Review of Safety Analysis Reports for Nuclear Power Plants: LWR Edition'' (SRP, from the current Revision 2 to a new Revision 3).

The proposed changes to this SRP section reflect current staff review methods and practices based on lessons learned from NRC reviews of design certification and combined license applications completed since the last revision of this chapter. Changes included a clarification that a transfer function is needed between elevation of the definition of the operating basis earthquake and the location of the seismic instrumentation, and a clarification that suitable seismic instrumentation promptly evaluates the seismic response of safety-related or risk-significant plant features after an earthquake.

The NRC staff requests public comments on the proposed revisions to SRP Section 3.7.4 in Chapter 3. After the NRC staff considers any public comments, it will make a determination regarding the issuance of the proposed SRP Section 3.7.4 in final form.

Backfitting and Issue Finality

This draft SRP section, if finalized, would provide guidance to the staff with respect to seismic instrumentation when reviewing future applications for construction permits and operating licenses under part 50 of Title 10 of the *Code of Federal Regulations* (10 CFR). The draft SRP would also provide guidance for reviewing an and future applications for standard design approvals, standard design certifications, and combined licenses under 10 CFR part 52 with respect to those same subject matters. The NRC staff does not intend to impose the positions in the draft SRP sections, if finalized, on the two existing OL applications, the current applications for design certification rules, the current applications for early site permits, the two current holders of combined licenses, or the current applications for combined licenses. Issuance of this draft SRP section, if finalized, would not constitute backfitting as defined in 10 CFR 50.109, or otherwise be inconsistent with the issue finality provisions in 10 CFR part 52. The staff's position is based upon the following considerations.

1. *The draft SRP positions, if finalized, do not constitute backfitting, inasmuch as the SRP is internal guidance to NRC staff.*

The SRP provides interim guidance to the staff on how to review an application for NRC regulatory approval in the form of licensing. Changes in internal staff guidance are not matters for which applicants or licensees are protected under 10 CFR 50.109 or issue finality provisions in part 52.

2. *Backfitting and issue finality—with certain exceptions discussed below—do not protect current or future applicants.*

Applicants and potential applicants are not, with certain exceptions, protected by either the Backfit Rule or any issue finality provisions under 10 CFR part 52. This is because neither the Backfit Rule nor the issue finality provisions under 10 CFR part 52—with certain exclusions discussed below—were intended to apply to every NRC action which substantially changes the expectations of current and future applicants.

The exceptions to the general principle are applicable whenever an applicant references a 10 CFR part 52 license (e.g., an early site permit) and/or NRC regulatory approval (e.g., a design certification rule) with specified issue finality provisions. The NRC staff does not, at this time, intend to impose the positions represented in the draft SRP section (if finalized) in a manner that is inconsistent with any issue finality provisions. If, in the future, the staff seeks to impose a position in the draft SRP section (if finalized) in a manner which does not provide issue finality as described in the applicable issue finality provision, then the staff must address the criteria for avoiding issue finality as described in the applicable issue finality provision.

3. *The staff has no intention to impose the draft SRP positions on existing nuclear power plant licenses or regulatory approvals either now or in the future (absent a voluntary request for change from the licensee, holder of a regulatory approval, or a design certification applicant).*

The NRC staff does not intend to impose or apply the positions described in the draft SRP section to existing (already issued) licenses (*e.g.,* operating licenses and combined licenses) and regulatory approvals—in this case, design certifications. Hence, the draft SRP—even if considered guidance which is within the purview of the issue finality provisions in 10 CFR part 52—need not be evaluated as if it were a backfit or as being inconsistent with issue finality provisions. If, in the future, the staff seeks to impose a position in the draft SRP (if finalized) on holders of already issued licenses in a manner which does not provide issue finality as described in the applicable issue finality provision, then the staff must make the showing as set forth in the Backfit Rule, or address the criteria for avoiding issue finality as described applicable issue finality provision, as applicable.

The NRC staff is issuing this notice to solicit public comments on the proposed SRP Section in Chapter 3. After the NRC staff considers any public comments, it will make a determination regarding the proposed SRP Section in Chapter 3.

Dated at Rockville, Maryland, this 26th day of August, 2013.

For the Nuclear Regulatory Commission.

Joseph Colaccino,

Chief, Policy Branch, Division of Advanced Reactors and Rulemaking, Office of New Reactors.

[FR Doc. 2013–21848 Filed 9–6–13; 8:45 am]

BILLING CODE 7590–01–P

PENSION BENEFIT GUARANTY CORPORATION

Proposed Submission of Information Collections for OMB Review; Comment Request; Payment of Premiums; Termination Premium

AGENCY: Pension Benefit Guaranty Corporation.

ACTION: Notice of intent to request extension of OMB approval of collection of information.

SUMMARY: The Pension Benefit Guaranty Corporation (PBGC) intends to request that the Office of Management and Budget (OMB) extend approval, under the Paperwork Reduction Act, of the collection of information for the termination premium under its regulation on Payment of Premiums (29 CFR Part 4007) (OMB control number 1212–0064; expires December 31, 2013), with minor changes. This notice informs the public of PBGC's intent and solicits public comment on the collection of information.

DATES: Comments should be submitted by November 8, 2013.

ADDRESSES: Comments may be submitted by any of the following methods:

- *Federal eRulemaking portal: http://www.regulations.gov.* Follow the Web site instructions for submitting comments.
- *Email: paperwork.comments@pbgc.gov.*
- *Fax:* 202–326–4220.
- *Mail or hand delivery:* Regulatory Affairs Group, Office of the General Counsel, Pension Benefit Guaranty Corporation, 1200 K Street NW., Washington, DC 20005–4026.

Comments received, including personal information provided, will be posted to PBGC's Web site (*http://www.pbgc.gov*).

The currently approved collection of information (Form T and instructions) and PBGC's premium payment regulation may be accessed on PBGC's Web site at *http://www.pbgc.gov.* Copies of the proposed collection of information may also be obtained without charge by writing to the Disclosure Division of the Office of the General Counsel of PBGC at the above address or by visiting the Disclosure Division or calling 202–326–4040 during normal business hours. (TTY and TDD users may call the Federal relay service toll-free at 800–877–8339 and ask to be connected to 202–326–4040.)

FOR FURTHER INFORMATION CONTACT: Deborah C. Murphy, Senior Counsel, Regulatory Affairs Group, Office of the General Counsel, Pension Benefit Guaranty Corporation, 1200 K Street NW., Washington, DC 20005–4026, 202–326–4024. (TTY and TDD users may call the Federal relay service toll-free at 800–877–8339 and ask to be connected to 202–326–4024.)

SUPPLEMENTARY INFORMATION: The Pension Benefit Guaranty Corporation (PBGC) administers the pension plan termination insurance program under title IV of the Employee Retirement Income Security Act of 1974 (ERISA). Section 4006(a)(7) of ERISA provides for a ''termination premium'' (in addition to the flat-rate and variable-rate premiums under section 4006(a)(3) and (8) of ERISA) that is payable for three years following certain distress and involuntary plan terminations. PBGC's regulations on Premium Rates (29 CFR part 4006) and Payment of Premiums (29 CFR part 4007) implement the termination premium. Sections 4007.3 and 4007.13(b) of the premium payment regulation require the filing of termination premium information and payments with PBGC. PBGC has promulgated Form T and instructions for paying the termination premium.

In general, the termination premium applies where a single-employer plan terminates in a distress termination under ERISA section 4041(c) (unless contributing sponsors and controlled group members meet the bankruptcy liquidation requirements of ERISA section 4041(c)(2)(B)(i)) or in an involuntary termination under ERISA section 4042, and the termination date under section 4048 of ERISA is after 2005. The termination premium does not apply in certain cases where termination occurs during a bankruptcy proceeding filed before October 18, 2005.

The termination premium is payable for three years. The same amount is payable each year. The amount of each payment is based on the number of participants in the plan as of the day before the termination date. In general, the amount of each payment is equal to $1,250 times the number of participants. However, the rate is increased from $1,250 to $2,500 in certain cases involving commercial airline or airline catering service plans. The termination premium is due on the 30th day of each of three consecutive 12-month periods. The first 12-month period generally begins shortly after the termination date or after the conclusion of bankruptcy proceedings in certain cases.

The termination premium and related information must be filed by a person liable for the termination premium. The persons liable for the termination premium are contributing sponsors and members of their controlled groups, determined on the day before the plan termination date. Interest on late termination premiums is charged at the rate imposed under section 6601(a) of the Internal Revenue Code, compounded daily, from the due date to the payment date. Penalties based on facts and circumstances may be assessed both for failure to timely pay the termination premium and for failure to timely file required related information and may be waived in appropriate circumstances. A penalty for late payment will not exceed the amount of termination premium paid late. Section 4007.10 of the premium payment regulation requires the retention of records supporting or validating the computation of premiums paid and requires that the records be made available to PBGC.

OMB has approved the termination premium collection of information (Form T and instructions) under control number 1212–0064 through December 31, 2013. PBGC intends to request that OMB extend approval of this collection of information for three years, with minor changes. An agency may not conduct or sponsor, and a person is not required to respond to, a collection of information unless it displays a currently valid OMB control number.

PBGC estimates that it will each year receive an average of about 25 filings for the first year a termination premium is due, 20 filings for the second year a termination premium is due, and 15 filings for the third year a termination premium is due, from a total of about 60 respondents. PBGC estimates that the total annual burden of the collection of information will be about ten hours and $8,800.

PBGC is soliciting public comments to—

- Evaluate whether the collection of information is necessary for the proper performance of the functions of the agency, including whether the information will have practical utility;
- Evaluate the accuracy of the agency's estimate of the burden of the collection of information, including the validity of the methodology and assumptions used;
- Enhance the quality, utility, and clarity of the information to be collected; and
- Minimize the burden of the collection of information on those who are to respond, including through the use of appropriate automated, electronic, mechanical, or other technological collection techniques or other forms of information technology,

e.g., permitting electronic submission of responses.

Issued in Washington, DC, this 3rd day of September, 2013.

Judith Starr,

General Counsel, Pension Benefit Guaranty Corporation.

[FR Doc. 2013–21840 Filed 9–6–13; 8:45 am]

BILLING CODE 7709–02–P

PENSION BENEFIT GUARANTY CORPORATION

Proposed Submission of Information Collection for OMB Review; Comment Request; Termination of Single-Employer Plans, Missing Participants

AGENCY: Pension Benefit Guaranty Corporation.

ACTION: Notice of intent to request extension of OMB approval.

SUMMARY: Pension Benefit Guaranty Corporation (''PBGC'') intends to request that the Office of Management and Budget (''OMB'') extend approval (with modifications), under the Paperwork Reduction Act of 1995, of a collection of information in its regulations on Termination of Single-Employer Plans and Missing Participants, and implementing forms and instructions (OMB control number 1212–0036; expires December 31, 2013). This notice informs the public of PBGC's intent and solicits public comment on the collection of information.

DATES: Comments should be submitted by November 8, 2013.

ADDRESSES: Comments may be submitted by any of the following methods:

- *Federal eRulemaking Portal: http://www.regulations.gov.* Follow the Web site instructions for submitting comments.
- *Email: paperwork.comments@pbgc.gov.*
- *Fax:* 202–326–4224.
- *Mail or Hand Delivery:* Legislative and Regulatory Department, Pension Benefit Guaranty Corporation, 1200 K Street NW., Washington, DC 20005–4026.

PBGC will make all comments available on its Web site at *www.pbgc.gov.*

Copies of the collection of information may be obtained without charge by writing to the Disclosure Division of the Office of the General Counsel of PBGC at the above address or by visiting that office or calling 202–326–4040 during normal business hours. (TTY and TDD users may call the Federal relay service toll-free at 1–800–877–8339 and ask to be connected to 202–326–4040.) The regulations and forms and instructions relating to this collection of information are available on PBGC's Web site at *www.pbgc.gov.*

FOR FURTHER INFORMATION CONTACT: Jo Amato Burns, Attorney, or Catherine B. Klion, Assistant General Counsel, Office of the General Counsel, Pension Benefit Guaranty Corporation, 1200 K Street NW., Washington, DC 20005–4026, 202–326–4024. (For TTY and TDD, call 800–877–8339 and ask to be connected to 202–326–4024.)

SUPPLEMENTARY INFORMATION: Under section 4041 of the Employee Retirement Income Security Act of 1974, as amended, a single-employer pension plan may terminate voluntarily only if it satisfies the requirements for either a standard or a distress termination. Pursuant to ERISA section 4041(b), for standard terminations, and section 4041(c), for distress terminations, and PBGC's termination regulation (29 CFR part 4041), a plan administrator wishing to terminate a plan is required to submit specified information to PBGC in support of the proposed termination and to provide specified information regarding the proposed termination to third parties (participants, beneficiaries, alternate payees, and employee organizations). In the case of a plan with participants or beneficiaries who cannot be located when their benefits are to be distributed, the plan administrator is subject to the requirements of ERISA section 4050 and PBGC's regulation on missing participants (29 CFR part 4050).

When PBGC conducts post-termination audits, it sometimes finds that some notices to participants or beneficiaries are not provided, or that the notices are inadequate. To address this problem, PBGC is now proposing to request that copies of Notice of Intent to Terminate and sample Notices of Plan Benefits be attached to the Form 500 that is submitted to PBGC. This should impose no additional burden on plan administrators since they would simply be sending PBGC copies of notices that they must provide to participants. In addition, PBGC is making clarifying, simplifying, editorial, and other changes to the existing forms and instructions.

PBGC estimates that 1,430 plan administrators will be subject to the collection of information requirements in PBGC's regulations on termination and missing participants and implementing forms and instructions each year, and that the total annual burden of complying with these requirements is 1,357 hours and $3,000,895. (Much of the work associated with terminating a plan is performed for purposes other than meeting these requirements.)

PBGC is soliciting public comments to—

- Evaluate whether the collection of information is necessary for the proper performance of the functions of the agency, including whether the information will have practical utility;
- Evaluate the accuracy of the agency's estimate of the burden of the collection of information, including the validity of the methodology and assumptions used;
- Enhance the quality, utility, and clarity of the information to be collected; and
- Minimize the burden of the collection of information on those who are to respond, including the use of appropriate automated, electronic, mechanical, or other technological collection techniques or other forms of information technology, e.g., permitting electronic submission of responses.

Issued in Washington, DC, this 3rd day of September 2013.

Judith Starr,

General Counsel, Pension Benefit Guaranty Corporation.

[FR Doc. 2013–21844 Filed 9–6–13; 8:45 am]

BILLING CODE 7709–02–P

OFFICE OF PERSONNEL MANAGEMENT

Submission for Review: Self-Certification of Full-Time School Attendance for the School Year, RI 25–14 and Information; and Instructions for Completing the Self-Certification of Full-Time School Attendance for the School Year, RI 25–14A

AGENCY: U.S. Office of Personnel Management.

ACTION: 60-Day Notice and request for comments.

SUMMARY: The Retirement Services, Office of Personnel Management (OPM) offers the general public and other Federal agencies the opportunity to comment on an extension, without change, of a currently approved information collection request (ICR) 3206–0032, Self-Certification of Full-Time School Attendance For The School Year, RI 25–14; and Information and Instructions for Completing the Self-Certification of Full-Time School Attendance For The School Year, RI 25–14A. As required by the Paperwork Reduction Act of 1995, (Pub. L. 104–13, 44 U.S.C. chapter 35) as amended by the Clinger-Cohen Act (Pub. L. 104–106), OPM is soliciting comments for this collection. The Office of Management

and Budget is particularly interested in comments that:

1. Evaluate whether the proposed collection of information is necessary for the proper performance of functions of OPM, including whether the information will have practical utility;

2. Evaluate the accuracy of the OPM's estimate of the burden of the proposed collection of information, including the validity of the methodology and assumptions used;

3. Enhance the quality, utility, and clarity of the information to be collected; and

4. Minimize the burden of the collection of information on those who are to respond, including through the use of appropriate automated, electronic, mechanical, or other technological collection techniques or other forms of information technology, e.g., permitting electronic submissions of responses.

DATES: Comments are encouraged and will be accepted until November 8, 2013. This process is conducted in accordance with 5 CFR 1320.1.

ADDRESSES: Interested persons are invited to submit written comments on the proposed information collection to the U.S. Office of Personnel Management, Retirement Services, Union Square 370, 1900 E Street NW., Washington, DC 20415–3500, Attention: Alberta Butler or sent by email to *Alberta.Butler@opm.gov.*

FOR FURTHER INFORMATION CONTACT: A copy of this ICR, with applicable supporting documentation, may be obtained by contacting the U.S. Office of Personnel Management, Retirement Services Publications Team, 1900 E Street NW., Room 4445–P, Washington, DC 20415, Attention: Cyrus S. Benson, or sent by email to *Cyrus.Benson@opm.gov* or faxed to (202) 606–0910.

SUPPLEMENTARY INFORMATION: RI 25–14 is used to survey survivor annuitants who are between the ages of 18 and 22 to determine if they meet the requirements of Section 8341(a)(4)(C), and Section 8441, title 5, U.S. Code, to receive benefits as a student. RI 25–14A provides instructions for completing the Self-Certification of Full-Time School Attendance For The School Year survey form.

Analysis

Agency: Retirement Operations, Retirement Services, Office of Personnel Management.

Title: Self-Certification of Full-Time School Attendance For The School Year and Information and Instructions for Completing the Self-Certification of Full-Time School Attendance For The School Year.

OMB Number: 3206–0032.

Frequency: On occasion.

Affected Public: Individuals or Households.

Number of Respondents: 14,000.

Estimated Time per Respondent: 12 minutes.

Total Burden Hours: 2,800.

U.S. Office of Personnel Management.

Elaine Kaplan,

Acting Director.

[FR Doc. 2013–21871 Filed 9–6–13; 8:45 am]

BILLING CODE 6325–38–P

OFFICE OF PERSONNEL MANAGEMENT

Submission for Review: Report of Medical Examination of Person Electing Survivor Benefits Under the Civil Service Retirement System, OPM 1530

AGENCY: U.S. Office of Personnel Management.

ACTION: 60-day notice and request for comments.

SUMMARY: The Retirement Services, Office of Personnel Management (OPM) offers the general public and other Federal agencies the opportunity to comment on an extension, without change, of a currently approved information collection request (ICR) 3206–0162, Report of Medical Examination of Person Electing Survivor Benefits Under the Civil Service Retirement System, OPM 1530. As required by the Paperwork Reduction Act of 1995 (Pub. L. 104–13, 44 U.S.C. chapter 35) as amended by the Clinger-Cohen Act (Pub. L. 104–106), OPM is soliciting comments for this collection. The Office of Management and Budget is particularly interested in comments that:

1. Evaluate whether the proposed collection of information is necessary for the proper performance of functions of OPM, including whether the information will have practical utility;

2. Evaluate the accuracy of OPM's estimate of the burden of the proposed collection of information, including the validity of the methodology and assumptions used;

3. Enhance the quality, utility, and clarity of the information to be collected; and

4. Minimize the burden of the collection of information on those who are to respond, including through the use of appropriate automated, electronic, mechanical, or other technological collection techniques or other forms of information technology, e.g., permitting electronic submissions of responses.

DATES: Comments are encouraged and will be accepted until November 8, 2013. This process is conducted in accordance with 5 CFR 1320.1.

ADDRESSES: Interested persons are invited to submit written comments on the proposed information collection to the U.S. Office of Personnel Management, Retirement Services, Union Square Room 370, 1900 E Street NW., Washington, DC 20415–3500, Attention: Alberta Butler, or sent by email to *Alberta.Butler@opm.gov.*

FOR FURTHER INFORMATION CONTACT: A copy of this ICR with applicable supporting documentation, may be obtained by contacting the Retirement Services Publications Team, Office of Personnel Management, 1900 E Street NW., Room 4445–P, Washington, DC 20415, Attention: Cyrus S. Benson, or sent by email to *Cyrus.Benson@opm.gov* or faxed to (202) 606–0910.

SUPPLEMENTARY INFORMATION: OPM Form 1530 is used to collect information regarding an annuitant's health so that OPM can determine whether the insurable interest survivor benefit election can be allowed.

Analysis

Agency: Retirement Operations, Retirement Services, Office of Personnel Management.

Title: Report of Medical Examination of Person Electing Survivor Benefits Under the Civil Service Retirement System.

OMB: 3206–0162.

Frequency: On occasion.

Affected Public: Individuals or households.

Number of Respondents: 500.

Estimated Time per Respondent: 1 hour 30 minutes.

Total Burden Hours: 750.

U.S. Office of Personnel Management.

Elaine Kaplan,

Acting Director.

[FR Doc. 2013–21876 Filed 9–6–13; 8:45 am]

BILLING CODE 6325–38–P

OFFICE OF PERSONNEL MANAGEMENT

Submission for Review: Revision of an Existing Information Collection, USAJOBS®

AGENCY: U.S. Office of Personnel Management.

ACTION: 60-day notice and request for comments.

SUMMARY: The Office of Personnel Management (OPM) offers the general public and other Federal agencies the opportunity to comment on a revised information collection request (ICR) 3206–0219, USAJOBS. As required by the Paperwork Reduction Act of 1995, (Pub. L. 104–13, 44 U.S.C. chapter 35) as amended by the Clinger-Cohen Act (Pub. L. 104–106), OPM is soliciting comments for this collection. In particular, we invite comments that:

1. Evaluate whether the proposed collection of information is necessary for the proper performance of the functions of OPM, including whether the information will have practical utility;
2. Evaluate the accuracy of the OPM's estimate of the burden of the proposed collection of information, including the validity of the methodology and assumptions used;
3. Enhance the quality, utility, and clarity of the information to be collected; and
4. Minimize the burden of the collection of information on those who are to respond, including through the use of appropriate automated, electronic, mechanical, or other technological collection techniques or other forms of information technology, e.g., permitting electronic submissions of responses.

DATES: Comments are encouraged and will be accepted until November 8, 2013. This process is conducted in accordance with 5 CFR 1320.1.

ADDRESSES: Interested persons are invited to submit written comments on the proposed information collection to the U.S. Office of Personnel Management, Chief Information Officer, USAJOBS, 1900 E Street NW., Washington, DC 20415, Attention: John Still or send them by email to *john.still@opm.gov.*

FOR FURTHER INFORMATION CONTACT: A copy of this ICR, with applicable supporting documentation, may be obtained by contacting the U.S. Office of Personnel Management, Chief Information Officer, USAJOBS, 1900 E Street NW., Washington, DC 20415, Attention: John Still, or by sending a request by email to *john.still@opm.gov.*

SUPPLEMENTARY INFORMATION: USAJOBS is the Federal Government's centralized source for most Federal jobs and employment information, including both positions that are required by law to be posted at that location and positions that can be posted there at an agency's discretion. The Applicant Profile and Resume Builder are two components of the USAJOBS application system. USAJOBS reflects the minimal critical elements collected across the Federal Government to assess an applicant's qualifications for Federal jobs under the authority of sections 1104, 1302, 3301, 3304, 3320, 3361, 3393, and 3394 of title 5, United States Code. This revision proposes to:

(a) Acknowledge the newest revision to the USAJOBS 3.0 system as USAJOBS.

(b) Make changes to the USAJOBS Applicant Profile to make the section more concise and easier for the applicant to understand and complete. Changes to the Applicant Profile include adding a new question on willingness to relocate. New fields will be added for telephone extensions and name prefixes and suffixes. The ''Current Goal'' field will be removed. In addition we will add and edit help language and make text, format and User Interface changes that will make the pages easier for applicants to navigate.

(c) Make changes to the USAJOBS Resume Builder that will improve navigation, make the builder both concise and easier for the applicant to complete. Changes include adding check boxes that read, ''I do not wish to provide work experience,'' ''I do not wish to provide education,'' and ''References available upon request.'' We will also make text and user interface changes throughout the resume builder to make the pages easier for the applicant to navigate, understand, and complete. Pursuant to a separate submission, we recently modified the ''Do you claim veterans' preference'' field to include a new option for 0-point Sole Survivorship Preference, to replace ''wife'' with spouse in the option for derived preference, and to add mother to the option for derived preference. In addition, we modified the Document Upload section to instruct current service members how to claim veterans' preference under the VOW (Veterans Opportunity to Work) to Hire Heroes Act of 2011.

Analysis

Agency: Office of Personnel Management.
Title: USAJOBS.
OMB Number: 3206–0219.
Frequency: Annually.
Affected Public: Individuals.
Number of Respondents: 1,060,591.
Estimated Time per Respondent: 43 minutes.
Total Burden Hours: 760,090.

U.S. Office of Personnel Management.

Elaine Kaplan,

Acting Director.

[FR Doc. 2013–21867 Filed 9–6–13; 8:45 am]

BILLING CODE 6325–47–P

OFFICE OF PERSONNEL MANAGEMENT

Submission for Review: We Need Information About Your Missing Payment, RI 38–31

AGENCY: U.S. Office of Personnel Management.

ACTION: 60-day notice and request for comments.

SUMMARY: The Retirement Services, Office of Personnel Management (OPM) offers the general public and other Federal agencies the opportunity to comment on an extension, without change, of a currently approved information collection request (ICR) 3206–0187, We Need Information About Your Missing Payment, RI 38–31. As required by the Paperwork Reduction Act of 1995 (Pub. L. 104–13, 44 U.S.C. chapter 35) as amended by the Clinger-Cohen Act (Pub. L. 104–106), OPM is soliciting comments for this collection. The Office of Management and Budget is particularly interested in comments that:

1. Evaluate whether the proposed collection of information is necessary for the proper performance of functions of OPM, including whether the information will have practical utility;
2. Evaluate the accuracy of OPM's estimate of the burden of the proposed collection of information, including the validity of the methodology and assumptions used;
3. Enhance the quality, utility, and clarity of the information to be collected; and
4. Minimize the burden of the collection of information on those who are to respond, including through the use of appropriate automated, electronic, mechanical, or other technological collection techniques or other forms of information technology, e.g., permitting electronic submissions of responses.

DATES: Comments are encouraged and will be accepted until November 8, 2013. This process is conducted in accordance with 5 CFR 1320.1.

ADDRESSES: Interested persons are invited to submit written comments on the proposed information collection to the U.S. Office of Personnel Management, Retirement Services, Union Square Room 370, 1900 E Street NW., Washington, DC 20415–3500, Attention: Alberta Butler, or sent by email to *Alberta.Butler@opm.gov.*

FOR FURTHER INFORMATION CONTACT: A copy of this ICR with applicable supporting documentation, may be obtained by contacting the Retirement Services Publications Team, Office of

Personnel Management, 1900 E Street NW., Room 4445–P, Washington, DC 20415, Attention: Cyrus S. Benson, or sent by email to *Cyrus.Benson@opm.gov* or faxed to (202) 606–0910.

SUPPLEMENTARY INFORMATION: RI 38–31 is sent in response to a notification by an individual of the loss or non-receipt of a payment from the Civil Service Retirement and Disability Fund. This form requests the information needed to enable OPM to trace and/or reissue payment. Missing payments may also be reported to OPM by a telephone call.

Analysis

Agency: Retirement Operations, Retirement Services, Office of Personnel Management.

Title: We Need Information About Your Missing Payment.

OMB: 3206–0187.

Frequency: On occasion.

Affected Public: Individuals or Households.

Number of Respondents: 8,000.

Estimated Time per Respondent: 17 minutes.

Total Burden Hours: 1,333 hours.

U.S. Office of Personnel Management.

Elaine Kaplan,

Acting Director.

[FR Doc. 2013–21869 Filed 9–6–13; 8:45 am]

BILLING CODE 6325–38–P

OFFICE OF PERSONNEL MANAGEMENT

Submission for Review: Death Benefit Payment Rollover Election, RI 94–7

AGENCY: U.S. Office of Personnel Management.

ACTION: 60-day notice and request for comments.

SUMMARY: The Retirement Services, Office of Personnel Management (OPM) offers the general public and other Federal agencies the opportunity to comment on an extension, without change, of a currently approved information collection request (ICR) 3206–0218, Death Benefit Payment Rollover Election, RI 94–7. As required by the Paperwork Reduction Act of 1995 (Pub. L. 104–13, 44 U.S.C. chapter 35) as amended by the Clinger-Cohen Act (Pub. L. 104–106), OPM is soliciting comments for this collection. The Office of Management and Budget is particularly interested in comments that:

1. Evaluate whether the proposed collection of information is necessary for the proper performance of functions of OPM, including whether the information will have practical utility;

2. Evaluate the accuracy of OPM's estimate of the burden of the proposed collection of information, including the validity of the methodology and assumptions used;

3. Enhance the quality, utility, and clarity of the information to be collected; and

4. Minimize the burden of the collection of information on those who are to respond, including through the use of appropriate automated, electronic, mechanical, or other technological collection techniques or other forms of information technology, e.g., permitting electronic submissions of responses.

DATES: Comments are encouraged and will be accepted until November 8, 2013. This process is conducted in accordance with 5 CFR 1320.1.

ADDRESSES: Interested persons are invited to submit written comments on the proposed information collection to the U.S. Office of Personnel Management, Retirement Services, Union Square Room 370, 1900 E Street NW., Washington, DC 20415–3500, Attention: Alberta Butler, or sent by email to *Alberta.Butler@opm.gov.*

FOR FURTHER INFORMATION CONTACT: A copy of this ICR with applicable supporting documentation, may be obtained by contacting the Retirement Services Publications Team, Office of Personnel Management, 1900 E Street NW., Room 4445–P, Washington, DC 20415, Attention: Cyrus S. Benson, or sent by email to *Cyrus.Benson@opm.gov* or faxed to (202) 606–0910.

SUPPLEMENTARY INFORMATION: RI 94–7 provides Federal Employees Retirement System (FERS) surviving spouses and former spouses with the means to elect payment of FERS rollover-eligible benefits directly or to an Individual Retirement Arrangement.

Analysis

Agency: Retirement Operations, Retirement Services, Office of Personnel Management.

Title: Death Benefit Payment Rollover Election.

OMB: 3206–0218.

Frequency: On occasion.

Affected Public: Individuals or Households.

Number of Respondents: 3,444.

Estimated Time per Respondent: 1 hour.

Total Burden Hours: 3,444.

U.S. Office of Personnel Management.

Elaine Kaplan,

Acting Director.

[FR Doc. 2013–21870 Filed 9–6–13; 8:45 am]

BILLING CODE 6325–38–P

POSTAL REGULATORY COMMISSION

[Docket Nos. MC2013–59 and CP2013–80; Order No. 1826]

Domestic Mail Contract

AGENCY: Postal Regulatory Commission.

ACTION: Notice.

SUMMARY: The Commission is noticing a recent Postal Service filing seeking to add Parcel Select Contract 7 to the competitive product list. This notice informs the public of the filing, invites public comment, and takes other administrative steps.

DATES: *Comments are due:* September 10, 2013.

ADDRESSES: Submit comments electronically via the Commission's Filing Online system at *http://www.prc.gov.* Those who cannot submit comments electronically should contact the person identified in the **FOR FURTHER INFORMATION CONTACT** section by telephone for advice on filing alternatives.

FOR FURTHER INFORMATION CONTACT: Stephen L. Sharfman, General Counsel, at 202–789–6820.

SUPPLEMENTARY INFORMATION:

Table of Contents

I. Introduction
II. Notice of Filings
III. Ordering Paragraphs

I. Introduction

In accordance with 39 U.S.C. 3642 and 39 CFR 3020.30 *et seq.,* the Postal Service filed a formal request and associated supporting information to add Parcel Select Contract 7 to the competitive product list.[1] The Postal Service asserts that Parcel Select Contract 7 is a competitive product ''not of general applicability'' within the meaning of 39 U.S.C. 3632(b)(3). Request at 1. The Request has been assigned Docket No. MC2013–59.

The Postal Service contemporaneously filed a redacted contract related to the proposed new product under 39 U.S.C. 3632(b)(3) and 39 CFR 3015.5. *Id.* Attachment B. The instant contract has been assigned Docket No. CP2013–80.

Request. To support its Request, the Postal Service filed six attachments as follows:

- Attachment A—a redacted copy of Governors' Decision No. 11–6, authorizing the new product;

[1] Request of the United States Postal Service to Add Parcel Select Contract 7 to Competitive Product List and Notice of Filing (Under Seal) of Unredacted Governors' Decision, Contract, and Supporting Data, August 30, 2013 (Request).

• Attachment B—a redacted copy of the contract;

• Attachment C—proposed changes to the Mail Classification Schedule competitive product list with the addition underlined;

• Attachment D—a Statement of Supporting Justification as required by 39 CFR 3020.32;

• Attachment E—a certification of compliance with 39 U.S.C. 3633(a); and

• Attachment F—an application for non-public treatment of materials to maintain redacted portions of the contract and related financial information under seal.

In the Statement of Supporting Justification, Dennis R. Nicoski, Manager, Field Sales Strategy and Contracts, asserts that the contract will cover its attributable costs, make a positive contribution toward coverage of institutional costs, and increase contribution toward the requisite 5.5 percent of the Postal Service's total institutional costs. *Id.* Attachment D at 1. Mr. Nicoski contends that there will be no issue of market dominant products subsidizing competitive products as a result of this contract. *Id.*

Related contract. The Postal Service included a redacted version of the related contract with the Request. *Id.* Attachment B. The contract is scheduled to become effective the day following the date on which the Commission issues all regulatory approvals. *Id.* at 7. The contract will expire on September 30, 2016, unless, among other things, either party terminates the agreement upon three months' written notice to the other party. *Id.* The Postal Service represents that the contract is consistent with 39 U.S.C. 3633(a). *Id.* Attachment E.

The Postal Service filed much of the supporting materials, including the related contract, under seal. *Id.* Attachment F. It maintains that the redacted portions of the Governors' Decision, contract, customer-identifying information, and related financial information, should remain confidential. *Id.* at 3. This information includes the price structure, underlying costs and assumptions, pricing formulas, information relevant to the customer's mailing profile, and cost coverage projections. *Id.* The Postal Service asks the Commission to protect customer-identifying information from public disclosure indefinitely. *Id.* at 7.

II. Notice of Filings

The Commission establishes Docket Nos. MC2013–59 and CP2013–80 to consider the Request pertaining to the proposed Parcel Select Contract 7 product and the related contract, respectively.

Interested persons may submit comments on whether the Postal Service's filings in the captioned dockets are consistent with the policies of 39 U.S.C. 3632, 3633, or 3642, 39 CFR 3015.5, and 39 CFR part 3020, subpart B. Comments are due no later than September 10, 2013. The public portions of these filings can be accessed via the Commission's Web site (*http://www.prc.gov*).

The Commission appoints Lyudmila Y. Bzhilyanskaya to serve as Public Representative in these dockets.

III. Ordering Paragraphs

It is ordered:

1. The Commission establishes Docket Nos. MC2013–59 and CP2013–80 to consider the matters raised in each docket.

2. Pursuant to 39 U.S.C. 505, Lyudmila Y. Bzhilyanskaya is appointed to serve as an officer of the Commission (Public Representative) to represent the interests of the general public in these proceedings.

3. Comments by interested persons in these proceedings are due no later than September 10, 2013.

4. The Secretary shall arrange for publication of this order in the **Federal Register.**

By the Commission.

Shoshana M. Grove,

Secretary.

[FR Doc. 2013–21795 Filed 9–6–13; 8:45 am]

BILLING CODE 7710–FW–P

POSTAL REGULATORY COMMISSION

[Docket No. MC2013–58 and CP2013–79; Order No. 1825]

New Postal Product

AGENCY: Postal Regulatory Commission.

ACTION: Notice.

SUMMARY: The Commission is noticing a recent Postal Service filing concerning the addition of Priority Mail Express & Priority Mail Contract 14 to the competitive product list. This notice informs the public of the filing, invites public comment, and takes other administrative steps.

DATES: *Comments are due:* September 10, 2013.

ADDRESSES: Submit comments electronically via the Commission's Filing Online system at *http://www.prc.gov.* Those who cannot submit comments electronically should contact the person identified in the **FOR FURTHER INFORMATION CONTACT** section by telephone for advice on filing alternatives.

FOR FURTHER INFORMATION CONTACT: Stephen L. Sharfman, General Counsel, at 202–789–6820.

SUPPLEMENTARY INFORMATION:

Table of Contents

I. Introduction
II. Notice of Filings
III. Ordering Paragraphs

I. Introduction

In accordance with 39 U.S.C. 3642 and 39 CFR 3020.30 *et seq.,* the Postal Service filed a formal request and associated supporting information to add Priority Mail Express & Priority Mail Contract 14 to the competitive product list.[1] The Postal Service asserts that Priority Mail Express & Priority Mail Contract 14 is a competitive product ''not of general applicability'' within the meaning of 39 U.S.C. 3632(b)(3). Request at 1. The Request has been assigned Docket No. MC2013–58.

The Postal Service contemporaneously filed a redacted contract related to the proposed new product under 39 U.S.C. 3632(b)(3) and 39 CFR 3015.5. *Id.* Attachment B. The instant contract has been assigned Docket No. CP2013–79.

Request. To support its Request, the Postal Service filed six attachments as follows:

• Attachment A—a redacted copy of Governors' Decision No. 11–6, authorizing the new product;

• Attachment B—a redacted copy of the contract;

• Attachment C—proposed changes to the Mail Classification Schedule competitive product list with the addition underlined;

• Attachment D—a Statement of Supporting Justification as required by 39 CFR 3020.32;

• Attachment E—a certification of compliance with 39 U.S.C. 3633(a); and

• Attachment F—an application for non-public treatment of materials to maintain redacted portions of the contract and related financial information under seal.

In the Statement of Supporting Justification, Dennis R. Nicoski, Manager, Field Sales Strategy and Contracts, asserts that the contract will cover its attributable costs, make a positive contribution to coverage of institutional costs, and increase

[1] Request of the United States Postal Service to Add Priority Mail Express & Priority Mail Contract 14 to Competitive Product List and Notice of Filing (Under Seal) of Unredacted Governors' Decision, Contract, and Supporting Data, August 30, 2013 (Request).

contribution toward the requisite 5.5 percent of the Postal Service's total institutional costs. *Id.* Attachment D at 1. Mr. Nicoski contends that there will be no issue of market dominant products subsidizing competitive products as a result of this contract. *Id.*

Related contract. The Postal Service included a redacted version of the related contract with the Request. *Id.* Attachment B. The contract is scheduled to become effective one business day following the date that the Commission issues all regulatory approval. *Id.* at 4. The contract will expire 3 years from the effective date. *Id.* The Postal Service represents that the contract is consistent with 39 U.S.C. 3633(a). *Id.* Attachment E.

The Postal Service filed much of the supporting materials, including the related contract, under seal. *Id.* Attachment F. It maintains that the redacted portions of the Governors' Decision, contract, customer-identifying information, and related financial information should remain confidential. *Id.* at 3. This information includes the price structure, underlying costs and assumptions, pricing formulas, information relevant to the customer's mailing profile, and cost coverage projections. *Id.* The Postal Service asks the Commission to protect customer-identifying information from public disclosure indefinitely. *Id.* at 7.

II. Notice of Filings

The Commission establishes Docket Nos. MC2013–58 and CP2013–79 to consider the Request pertaining to the proposed Priority Mail Express & Priority Mail Contract 14 product and the related contract, respectively.

Interested persons may submit comments on whether the Postal Service's filings in the captioned dockets are consistent with the policies of 39 U.S.C. 3632, 3633, or 3642, 39 CFR 3015.5, and 39 CFR part 3020, subpart B. Comments are due no later than September 10, 2013. The public portions of these filings can be accessed via the Commission's Web site (*http://www.prc.gov*).

The Commission appoints Pamela A. Thompson to serve as Public Representative in these dockets.

III. Ordering Paragraphs

It is ordered:

1. The Commission establishes Docket Nos. MC2013–58 and CP2013–79 to consider the matters raised in each docket.

2. Pursuant to 39 U.S.C. 505, Pamela A. Thompson is appointed to serve as an officer of the Commission (Public Representative) to represent the interests of the general public in these proceedings.

3. Comments by interested persons in these proceedings are due no later than September 10, 2013.

4. The Secretary shall arrange for publication of this order in the **Federal Register**.

By the Commission.

Shoshana M. Grove,

Secretary.

[FR Doc. 2013–21794 Filed 9–6–13; 8:45 am]

BILLING CODE P

SECURITIES AND EXCHANGE COMMISSION

[Release No. 34–70303]

Order Exempting Broker-Dealers Participating in NYSE Arca, Inc.'s Lead Market Maker Incentive Program From Section 11(d)(1) of the Securities Exchange Act of 1934 and Rule 11d1–2 Thereunder

September 3, 2013.

On June 6, 2013, the Securities and Exchange Commission (''Commission'') approved a proposed rule change of NYSE Arca, Inc. (''Exchange'' or ''NYSE Arca'') to adopt new NYSE Arca Equities Rule 8.800 (''Rule 8.800''). Rule 8.800 establishes an incentive program on a pilot basis (''Incentive Program'') for Lead Market Makers (''LMMs'') in certain exchange-traded products (''ETPs'').[1] The Incentive Program is designed to encourage market makers to take LMM assignments in certain lower volume ETPs by offering an alternative fee structure for those LMMs and ''LMM Payments'' that would be funded from the Exchange's general revenues if the LMM meets or exceeds certain performance standards set forth in Rule 8.800(c) that relate to the LMM's quoting activity in the ETP. The costs of the Incentive Program would be funded by charging participating issuers non-refundable ''Optional Incentive Fees'' which may be paid by sponsors on behalf of the issuer.

Section 11(d)(1) of the Exchange Act[2] generally prohibits a broker-dealer from extending or maintaining credit, or arranging for the extension or maintenance of credit, on shares of new issue securities, if the broker-dealer participated in the distribution of the new issue securities within the preceding 30 days. Shares of open-end investment companies and unit investment trusts registered under the Investment Company Act of 1940, such as exchange traded fund (''ETF'') shares, are distributed in a continuous manner. Broker-dealers that sell such securities are therefore participating in the ''distribution'' of a new issue for purposes of Section 11(d)(1).[3]

The Division of Trading and Markets, acting under delegated authority, granted an exemption from Section 11(d)(1) and Rule 11d1–2 thereunder to broker-dealers that have entered into an agreement with an ETF's distributor to place orders with the distributor to purchase or redeem the ETF's shares (''Broker-Dealer APs'').[4] The SIA Exemption allows a Broker-Dealer AP to extend or maintain credit, or arrange for the extension or maintenance of credit, to or for customers on the shares of qualifying ETFs subject to the condition that neither the Broker-Dealer AP, nor any natural person associated with the Broker-Dealer AP, directly or indirectly (including through any affiliate of the Broker-Dealer AP), receives from the fund complex any payment, compensation, or other economic incentive to promote or sell the shares of the ETF to persons outside the fund complex, other than non-cash compensation permitted under NASD Rule 2830(l)(5)(A), (B), or (C). This condition is intended to eliminate special incentives that Broker-Dealer APs and their associated persons might otherwise have to ''push'' ETF shares.

The Incentive Program will permit certain ETPs, including ETFs and commodity-based exchange traded trusts, to voluntarily incur increased listing fees payable to the Exchange. In turn, the Exchange will use a portion of the fees to make LMM Payments to market makers that improve the market quality of participating issuers'

---

[1] Securities Exchange Act Release No. 69706 (June 6, 2013), 78 FR 35340 (June 12, 2013) (SR–NYSEArca–2013–34) (the ''Approval Order''). The Approval Order contains a detailed description of the Incentive Program. On March 21, 2013, the Exchange filed with the Commission, pursuant to Section 19(b)(1) of the Securities Exchange Act of 1934, as amended (''Act'' or ''Exchange Act'') and Rule 19b–4 thereunder, a proposed rule change to establish the Program. The proposed rule change, as modified by Amendment No. 1 thereto, was published for comment in the **Federal Register** on April 11, 2013. Securities Exchange Act Release No. 69335 (Apr. 5, 2013), 78 FR 21681 (Apr. 11, 2013). The Approval Order grants approval of the proposed rule change, as modified by Amendments No. 1 and 2.

[2] 15 U.S.C. 78k(d)(1).

[3] *See, e.g.,* Exchange Act Release Nos. 6726 (Feb. 8, 1962), 27 FR 1415 (Feb. 15, 1962) and 21577 (Dec. 18, 1984), 49 FR 50174 (Dec. 27, 1984).

[4] See Letter from Catherine McGuire, Chief Counsel, Division of Trading and Markets, Securities and Exchange Commission to Securities Industry Association (Nov. 21, 2005) (''SIA Exemption'').

securities.[5] LMM Payments will be accrued solely for quoting activity on the Exchange. Broker-dealers receiving the incentive payments would not be in compliance with the compensation condition of the SIA Exemption discussed above.[6] Therefore, an LMM that is also a Broker-Dealer AP for an ETF (or an associated person or an affiliate of a Broker-Dealer AP) that receives the incentives will not be able to rely on the SIA Exemption from Section 11(d)(1).[7]

Thus, NYSE Arca has requested, on behalf of itself and those broker-dealers that receive payments under the Incentive Program as discussed in its letter, an exemption from the requirements of Section 11(d)(1) of the Exchange Act and Rule 11d1–2 thereunder.[8]

NYSE Arca maintains that a Broker-Dealer AP and a broker-dealer that is not a Broker-Dealer AP in a particular ETF, but effects transactions in shares of the ETF exclusively in the secondary market (''Non-AP Broker-Dealer'') should be able to rely on the SIA Exemption, notwithstanding the receipt of payments under the Incentive Program. Among other things, the Exchange notes that the LMM Payment is provided only to LMMs that meet or exceed market quality standards and that the Incentive Program will not provide an incentive for LMMs to ''push'' the securities of participating issuers.[9] Rather, the Exchange states that the Incentive Program is intended to foster enhanced liquidity, robust quoting activity, narrowed spreads, and reduced transaction costs for investors in participating ETPs. NYSE Arca notes that the LMM Payments are not attributable to LMMs executing transactions in securities, but only for LMMs' two-sided quoting activity. The Exchange also states that the disclosure provisions of the Incentive Program will alert and educate investors about the program and the LMM Payments.[10]

NYSE Arca also asserts that the Incentive Program's goal of enhancing market quality is most likely to be accomplished if the program attracts as many participating market makers as possible. In the Exchange's view, eligible market makers may decline to participate in the program if no exemption from Section 11(d)(1) and Rule 11d1–2 is available, either because the market makers may already extend credit to customers on the securities of participating issuers or because the value to market makers of offering credit services to customers on such securities may outweigh the value of participating in the Incentive Program.[11] The Commission recognizes that broker-dealers that have to choose between participating in the Incentive Program and having the ability to offer credit services to customers in reliance on the SIA Exemption for business reasons may determine to continue to offer the credit services and decline to participate in the Incentive Program. In other words, the lack of an available exemption from Section 11(d)(1) and Rule 11d1–2 thereunder could serve to reduce the number of market makers in the Incentive Program.

The Commission finds that it is appropriate in the public interest, and is consistent with the protection of investors, to grant a limited exemption from Section 11(d)(1) of the Exchange Act and Rule 11d1–2 thereunder to Broker-Dealer APs and Non-AP Broker-Dealers that participate in the Incentive Program. The Incentive Program is intended to improve market quality by promoting enhanced liquidity, reduced spreads, and reduced cost of investing in the securities of participating issuers. The Commission believes that granting the exemption will encourage a larger number of market makers to participate in the Incentive Program and that a larger number of participating market makers should create greater potential for the market quality improvements the Incentive Program aims to achieve. The Commission notes in particular that the Exchange will determine to pay an LMM Payment only if an LMM maintains certain minimum quoting standards.[12] No portion of the LMM Payment is attributable to sales of ETP securities and thus the LMM Payment should provide no direct incentive for LMMs to promote the sale of ETP securities. Thus, the Commission does not believe that the LMM Payment will provide the kind of incentive for ''share-pushing'' with which Congress was concerned when it enacted Section 11(d).[13] Moreover, the required Web site

[5] Among other things, the Incentive Program requires LMMs to: (1) Maintain continuous, two-sided trading interest where the price of the bid (offer) interest is not more than a designated percentage away from the then current NBBO; (2) maintain quotes or orders at the NBBO or better (the ''Inside'') during the month during Core Trading Hours in accordance with certain maximum width and minimum depth thresholds based on daily share volume and share price, unless the thresholds are otherwise met by quotes or orders of all market participants across all markets trading the security; (3) maintain quotes or orders on NYSE Arca at the NBBO that meet either a time-at-the-Inside requirement or a size-setting NBBO requirement; and (4) for at least 90% of the time when quotes may be entered during Core Trading Hours each trading day, as averaged over the course of a month, maintain (A) at least 2,500 shares of attributable, displayed posted buy liquidity on the Exchange that is priced no more than 2% away from the NBB for the particular ETP; and (B) at least 2,500 shares of attributable, displayed posted offer liquidity on the Exchange that is priced no more than 2% away from the NBO for the particular ETP. If an LMM does not meet these quoting requirements, it will not receive an LMM Payment, and an LMM that does not meet or exceed these performance standards for any two of the three months of a quarter or for five months during the pilot period may lose its LMM status. Request Letter at 5.

[6] The incentive payments market makers may receive under Rule 8.800 are indirect payments from the fund complex to the market maker and that those payments are compensation to promote or sell the shares of the ETF.

[7] *See* Approval Order, *supra* note 1, at 31–33.

[8] Letter from Janet McGinness, Senior Vice President and Secretary, NYSE Euronext to David Blass, Chief Counsel, Division of Trading and Markets, Securities and Exchange Commission (September 3, 2013) (''Request Letter''). The relief requested is similar to the relief the Commission previously granted to NASDAQ Stock Market LLC in connection with its pilot Market Quality Program. See Exchange Act Release No. 69892 (June 28, 2013).

[9] Congress adopted Section 11(d)(1) in response to concerns about potential conflicts of interest faced by persons acting as both brokers and dealers in the distribution of new issue securities. In a House report accompanying the Exchange Act, Congress noted:

It is difficult to serve two masters. And it is particularly difficult to give impartial advice to a client if the dealer-broker has his own securities to sell, particularly when they are new securities for which there is no ready market.

H.R. Rep. No. 1383, 73d Cong., 2d Sess. 15 (1934). Congress concluded that forcing the separation of brokers and dealers would have led brokers to abandon their dealer business, impairing the mechanism to distribute new securities. In lieu of this measure, Congress required broker-dealers to disclose to customers the capacity in which they were acting and adopted section 11(d)(1) prohibiting broker-dealers from extending margin on new issue securities in the distribution of which the broker-dealer had participated. *Id.*

[10] Request Letter at 7. The Exchange notes that its new rules are designed to provide comprehensive and accessible disclosure to investors about the MQP Program through the Exchange's Web site or the Web sites of the participating issuers. New Rules 8.800(b)(6) and (7) require the Exchange to disclose on its Web site the following information with respect to the operation of the Incentive Program: (i) The ETPs participating in the Incentive Program and the LMM assigned to each participating ETP; (ii) the date a particular ETP begins participating or ceases participating in the Incentive Program; (iii) the date the Exchange receives written notice of an issuer's intent to withdraw its ETP from the Incentive Program, or an LMM's intent to withdraw from its ETP assignment(s) in the Incentive Program, and, in each case, the intended withdrawal date, if provided; and (iv) the amount of the Optional Incentive Fee for each ETP. The Exchange also will include on its Web site a fair and balanced description of the Incentive Program, including a description of the potential benefits and risks that may be attendant with an ETP's participation in the program. An issuer of an ETP that is approved to participate in the Incentive Program will also be required to (i) issue a press release to the public when an ETP commences or ceases participation in the Incentive Program, (ii) post such press release on its Web site, and (iii) provide on its Web site a hyperlink to the Exchange's Web page describing the Incentive Program.

[11] Request Letter at 6.

[12] *See* note 5, *supra.*

[13] *See* note 9, *supra.*

disclosures, discussed above,[14] should also help LMMs' customers understand the Program's effect on LMMs' incentives and thus will help investors to make informed decisions in light of the additional incentives LMMs may have in providing quotes for these securities.

Conclusion

It is therefore ordered, that Broker-Dealer APs and Non-AP Broker-Dealers that participate in the Incentive Program, may rely on the SIA Exemption pertaining to Section 11(d)(1) and Rule 11d1–2 thereunder,[15] subject to the conditions provided in that exemption, notwithstanding that Broker-Dealer APs and Non-AP Broker-Dealers may receive LMM Payments for participating in the Incentive Program as described in your request.

This exemption will expire when the Incentive Program terminates, and is subject to modification or revocation at any time the Commission determines that such action is necessary or appropriate in furtherance of the purposes of the Exchange Act.

For the Commission, by the Division of Trading and Markets, pursuant to delegated authority.[16]

Kevin M. O'Neill,

Deputy Secretary.

[FR Doc. 2013–21816 Filed 9–6–13; 8:45 am]

BILLING CODE 8011–01–P

[14] *See* note 10, *supra.*

[15] *See* note 4, *supra.*

[16] 17 CFR 200.30–3(a)(62).

SECURITIES AND EXCHANGE COMMISSION

Sunshine Act Meeting

Notice is hereby given, pursuant to the provisions of the Government in the Sunshine Act, Public Law 94–409, that the Securities and Exchange Commission will hold a Closed Meeting on Thursday, September 12, 2013 at 2:00 p.m.

Commissioners, Counsel to the Commissioners, the Secretary to the Commission, and recording secretaries will attend the Closed Meeting. Certain staff members who have an interest in the matters also may be present.

The General Counsel of the Commission, or her designee, has certified that, in her opinion, one or more of the exemptions set forth in 5 U.S.C. 552b(c)(3), (5), (7), 9(B) and (10) and 17 CFR 200.402(a)(3), (5), (7), 9(ii) and (10), permit consideration of the scheduled matters at the Closed Meeting.

Commissioner Piwowar, as duty officer, voted to consider the items listed for the Closed Meeting in a closed session.

The subject matter of the Closed Meeting will be:

Institution and settlement of injunctive actions;

Institution and settlement of administrative proceedings; and

Other matters relating to enforcement proceedings.

At times, changes in Commission priorities require alterations in the scheduling of meeting items.

For further information and to ascertain what, if any, matters have been added, deleted or postponed, please contact the Office of the Secretary at (202) 551–5400.

Dated: September 5, 2013.

Elizabeth M. Murphy,

Secretary.

[FR Doc. 2013–22040 Filed 9–5–13; 4:15 pm]

BILLING CODE 8011–01–P

SECURITIES AND EXCHANGE COMMISSION

[Release No. 34–70301; File No. SR–C2–2013–032]

Self-Regulatory Organizations; C2 Options Exchange, Incorporated; Notice of Filing and Immediate Effectiveness of a Proposed Rule Change Relating to the Options Regulatory Fee

September 3, 2013.

Pursuant to Section 19(b)(1) of the Securities Exchange Act of 1934 (the ''Act'')[1] and Rule 19b–4 thereunder,[2] notice is hereby given that on August 21, 2013, C2 Options Exchange, Incorporated filed with the Securities and Exchange Commission (''Commission'') the proposed rule change as described in Items I, II, and III below, which Items have been prepared by the self-regulatory organization. The Commission is publishing this notice to solicit comments on the proposed rule change from interested persons.

I. Self-Regulatory Organization's Statement of the Terms of Substance of the Proposed Rule Change

C2 Options Exchange, Incorporated (the ''Exchange'' or ''C2'') proposes to amend the Options Regulatory Fee. The text of the proposed rule change is available on the Exchange's Web site (*http://www.c2exchange.com/Legal/*), at the Exchange's Office of the Secretary, and at the Commission's Public Reference Room.

II. Self-Regulatory Organization's Statement of the Purpose of, and Statutory Basis for, the Proposed Rule Change

In its filing with the Commission, the Exchange included statements concerning the purpose of and basis for the proposed rule change and discussed any comments it received on the proposed rule change. The text of these statements may be examined at the places specified in Item IV below. The Exchange has prepared summaries, set forth in sections A, B, and C below, of the most significant aspects of such statements.

A. Self-Regulatory Organization's Statement of the Purpose of, and Statutory Basis for, the Proposed Rule Change

1. Purpose

The Exchange has reevaluated the current amount of the Options Regulatory Fee (''ORF'') in light of better than expected trading volume so far in 2013 among other factors. In order to try to ensure that revenue collected from the ORF, in combination with other regulatory fees and fines, does not exceed the Exchange's total regulatory costs, the Exchange proposes to reduce the ORF from $.002 per contract to zero. The proposed fee change would be operative on September 1, 2013. The Exchange intends to reevaluate the amount of the ORF again in connection with its annual budget review.

The ORF is assessed by the Exchange to each Permit Holder for all options transactions executed or cleared by the Permit Holder that are cleared by The Options Clearing Corporation (''OCC'') in the customer range (i.e., transactions that clear in a customer account at OCC) regardless of the marketplace of execution. In other words, the Exchange imposes the ORF on all customer-range transactions executed by a Permit Holder, even if the transactions do not take place on the Exchange.[3] The ORF also is charged for transactions that are not executed by a Permit Holder but are ultimately cleared by a Permit Holder.

[1] 15 U.S.C.78s(b)(1).

[2] 17 CFR 240.19b–4.

[3] Exchange rules require each Permit Holder to record the appropriate account origin code on all orders at the time of entry in order to allow the Exchange to properly prioritize and route orders and assess transaction fees pursuant to the rules of the Exchange and report resulting transactions to the OCC. C2 order origin codes are defined in C2 Regulatory Circular RG13–015. The Exchange represents that it has surveillances in place to verify that Trading Permit Holders mark orders with the correct account origin code.

In the case where a Permit Holder executes a transaction and a different Permit Holder clears the transaction, the ORF is assessed to the Permit Holder who executed the transaction. In the case where a non-Permit Holder executes a transaction and a Permit Holder clears the transaction, the ORF is assessed to the Permit Holder who clears the transaction. The ORF is collected indirectly from Permit Holders through their clearing firms by OCC on behalf of the Exchange.

The ORF is designed to recover a material portion of the costs to the Exchange of the supervision and regulation of Permit Holder customer options business, including performing routine surveillances, investigations, examinations, financial monitoring, as well as policy, rulemaking, interpretive and enforcement activities. The Exchange believes that revenue generated from the ORF, when combined with all of the Exchange's other regulatory fees and fines, will cover a material portion, but not all, of the Exchange's regulatory costs. The Exchange notes that its regulatory responsibilities with respect to Permit Holder compliance with options sales practice rules have largely been allocated to FINRA under a 17d–2 agreement. The ORF is not designed to cover the cost of that options sales practice regulation.

The Exchange will continue to monitor the amount of revenue collected from regulatory fees and fines to ensure that it does not exceed the Exchange's total regulatory costs and to ensure the Exchange is meeting its revenue benchmarks. The Exchange may make other adjustments to the ORF in the future as necessary. The Exchange notifies Permit Holders of adjustments to the ORF via regulatory circular.

2. Statutory Basis

The Exchange believes the proposed rule change is consistent with the Securities Exchange Act of 1934 (the ''Act'') and the rules and regulations thereunder applicable to the Exchange and, in particular, the requirements of Section 6(b) of the Act.[4] Specifically, the Exchange believes the proposed rule change is consistent with Section 6(b)(4) of the Act,[5] which provides that Exchange rules may provide for the equitable allocation of reasonable dues, fees, and other charges among its Permit Holders and other persons using its facilities. Additionally, the Exchange believes the proposed rule change is consistent with the Section 6(b)(5)[6] requirement that the rules of an exchange not be designed to permit unfair discrimination between customers, issuers, brokers, or dealers.

The Exchange believes the proposed ORF reduction is reasonable in that it would help the Exchange try to ensure that revenue collected from the ORF, in combination with other regulatory fees and fines, does not exceed the Exchange's total regulatory costs in light of better than expected trading volume so far in 2013 and other factors.

The Exchange believes the ORF is equitable and not unfairly discriminatory in that it is charged to all Permit Holders on all their transactions that clear in the customer range at the OCC. Moreover, the Exchange believes the ORF ensures fairness by assessing higher fees to those Permit Holders that require more Exchange regulatory services based on the amount of customer options business they conduct. Regulating customer trading activity is much more labor intensive and requires greater expenditure of human and technical resources than regulating non-customer trading activity, which tends to be more automated and less labor-intensive. As a result, the costs associated with administering the customer component of the Exchange's overall regulatory program are materially higher than the costs associated with administering the non-customer component (e.g., Permit Holder proprietary transactions) of its regulatory program.[7]

B. Self-Regulatory Organization's Statement on Burden on Competition

C2 does not believe that the proposed rule change will impose any burden on competition that is not necessary or appropriate in furtherance of the purposes of the Act. The proposed rule change is not designed to address any competitive issues. Rather, the proposed rule change is designed to help the Exchange to adequately fund its regulatory activities while seeking to ensure that total regulatory revenues do not exceed total regulatory costs.

C. Self-Regulatory Organization's Statement on Comments on the Proposed Rule Change Received From Members, Participants, or Others

The Exchange neither solicited nor received comments on the proposed rule change.

III. Date of Effectiveness of the Proposed Rule Change and Timing for Commission Action

The foregoing rule change has become effective pursuant to Section 19(b)(3)(A) of the Act[8] and paragraph (f) of Rule 19b–4[9] thereunder. At any time within 60 days of the filing of the proposed rule change, the Commission summarily may temporarily suspend such rule change if it appears to the Commission that such action is necessary or appropriate in the public interest, for the protection of investors, or otherwise in furtherance of the purposes of the Act. If the Commission takes such action, the Commission will institute proceedings to determine whether the proposed rule change should be approved or disapproved.

IV. Solicitation of Comments

Interested persons are invited to submit written data, views, and arguments concerning the foregoing, including whether the proposed rule change is consistent with the Act. Comments may be submitted by any of the following methods:

Electronic Comments

- Use the Commission's Internet comment form (*http://www.sec.gov/rules/sro.shtml*); or
- Send an email to *rule-comments@sec.gov*. Please include File Number SR–C2–2013–032 on the subject line.

Paper Comments

- Send paper comments in triplicate to Elizabeth M. Murphy, Secretary, Securities and Exchange Commission, 100 F Street NE., Washington, DC 20549–1090.

All submissions should refer to File Number SR–C2–2013–032. This file number should be included on the subject line if email is used. To help the Commission process and review your comments more efficiently, please use only one method. The Commission will post all comments on the Commission's Internet Web site (*http://www.sec.gov/rules/sro.shtml*). Copies of the submission, all subsequent amendments, all written statements with respect to the proposed rule change that are filed with the

[4] 15 U.S.C. 78f(b).

[5] 15 U.S.C. 78f(b)(4).

[6] *Id.* [sic]

[7] If the Exchange changes its method of funding regulation or if circumstances otherwise change in the future, the Exchange may decide to modify the ORF or assess a separate regulatory fee on Permit Holder proprietary transactions if the Exchange deems it advisable.

[8] 15 U.S.C. 78s(b)(3)(A).

[9] 17 CFR 240.19b–4(f).

Commission, and all written communications relating to the proposed rule change between the Commission and any person, other than those that may be withheld from the public in accordance with the provisions of 5 U.S.C. 552, will be available for Web site viewing and printing in the Commission's Public Reference Room, 100 F Street NE., Washington, DC 20549, on official business days between the hours of 10:00 a.m. and 3:00 p.m. Copies of such filing also will be available for inspection and copying at the principal office of the Exchange. All comments received will be posted without change; the Commission does not edit personal identifying information from submissions. You should submit only information that you wish to make publicly available. All submissions should refer to File Number SR–C2–2013–032 and should be submitted on or before September 30, 2013.

For the Commission, by the Division of Trading and Markets, pursuant to delegated authority.[10]

Kevin M. O'Neill,

Deputy Secretary.

[FR Doc. 2013–21814 Filed 9–6–13; 8:45 am]

BILLING CODE 8011–01–P

SECURITIES AND EXCHANGE COMMISSION

[Release No. 34–70302; File No. SR–CBOE–2013–082]

Self-Regulatory Organizations; Chicago Board Options Exchange, Incorporated; Notice of Filing and Immediate Effectiveness of a Proposed Rule Change Relating to the Options Regulatory Fee

September 3, 2013.

Pursuant to Section 19(b)(1) of the Securities Exchange Act of 1934 (the ''Act'')[1] and Rule 19b–4 thereunder,[2] notice is hereby given that on August 21, 2013, the Chicago Board Options Exchange, Incorporated filed with the Securities and Exchange Commission (''Commission'') the proposed rule change as described in Items I, II, and III below, which Items have been prepared by the self-regulatory organization. The Commission is publishing this notice to solicit comments on the proposed rule change from interested persons.

I. Self-Regulatory Organization's Statement of the Terms of Substance of the Proposed Rule Change

Chicago Board Options Exchange, Incorporated (the ''Exchange'' or ''CBOE'') proposes to amend the Options Regulatory Fee. The text of the proposed rule change is available on the Exchange's Web site (*http://www.cboe.com/AboutCBOE/CBOELegalRegulatoryHome.aspx*), at the Exchange's Office of the Secretary, and at the Commission's Public Reference Room.

II. Self-Regulatory Organization's Statement of the Purpose of, and Statutory Basis for, the Proposed Rule Change

In its filing with the Commission, the Exchange included statements concerning the purpose of and basis for the proposed rule change and discussed any comments it received on the proposed rule change. The text of these statements may be examined at the places specified in Item IV below. The Exchange has prepared summaries, set forth in sections A, B, and C below, of the most significant aspects of such statements.

A. Self-Regulatory Organization's Statement of the Purpose of, and Statutory Basis for, the Proposed Rule Change

1. Purpose

The Exchange has reevaluated the current amount of the Options Regulatory Fee (''ORF'') in light of better than expected trading volume so far in 2013 among other factors. In order to try to ensure that revenue collected from the ORF, in combination with other regulatory fees and fines, does not exceed the Exchange's total regulatory costs, the Exchange proposes to reduce the ORF from $.0085 per contract to $.0074 per contract. The proposed fee change would be operative on September 1, 2013. The Exchange intends to reevaluate the amount of the ORF again in connection with its annual budget review.

The ORF is assessed by the Exchange to each Trading Permit Holder for all options transactions executed or cleared by the Trading Permit Holder that are cleared by The Options Clearing Corporation (''OCC'') in the customer range (i.e., transactions that clear in a customer account at OCC) regardless of the marketplace of execution. In other words, the Exchange imposes the ORF on all customer-range transactions executed by a Trading Permit Holder, even if the transactions do not take place on the Exchange.[3] The ORF also is charged for transactions that are not executed by a Trading Permit Holder but are ultimately cleared by a Trading Permit Holder. In the case where a Trading Permit Holder executes a transaction and a different Trading Permit Holder clears the transaction, the ORF is assessed to the Trading Permit Holder who executed the transaction. In the case where a non-Trading Permit Holder executes a transaction and a Trading Permit Holder clears the transaction, the ORF is assessed to the Trading Permit Holder who clears the transaction. The ORF is collected indirectly from Trading Permit Holders through their clearing firms by OCC on behalf of the Exchange.

The ORF is designed to recover a material portion of the costs to the Exchange of the supervision and regulation of Trading Permit Holder customer options business, including performing routine surveillances, investigations, examinations, financial monitoring, as well as policy, rulemaking, interpretive and enforcement activities. The Exchange believes that revenue generated from the ORF, when combined with all of the Exchange's other regulatory fees and fines, will cover a material portion, but not all, of the Exchange's regulatory costs. The Exchange notes that its regulatory responsibilities with respect to Trading Permit Holder compliance with options sales practice rules have largely been allocated to FINRA under a 17d–2 agreement. The ORF is not designed to cover the cost of that options sales practice regulation.

The Exchange will continue to monitor the amount of revenue collected from the ORF to ensure that it, in combination with its other regulatory fees and fines, does not exceed the Exchange's total regulatory costs. If the Exchange determines regulatory revenues exceed regulatory costs, the Exchange will adjust the ORF by submitting a fee change filing to the Commission. The Exchange notifies Trading Permit Holders of adjustments to the ORF via regulatory circular.

2. Statutory Basis

The Exchange believes the proposed rule change is consistent with the

[10] 17 CFR 200.30–3(a)(12).

[1] 15 U.S.C. 78s(b)(1).

[2] 17 CFR 240.19b–4.

[3] Exchange rules require each Trading Permit Holder to record the appropriate account origin code on all orders at the time of entry in order to allow the Exchange to properly prioritize and route orders and assess transaction fees pursuant to the rules of the Exchange and report resulting transactions to the OCC. CBOE order origin codes are defined in CBOE Regulatory Circular RG13–038. The Exchange represents that it has surveillances in place to verify that Trading Permit Holders mark orders with the correct account origin code.

Securities Exchange Act of 1934 (the ''Act'') and the rules and regulations thereunder applicable to the Exchange and, in particular, the requirements of Section 6(b) of the Act.[4] Specifically, the Exchange believes the proposed rule change is consistent with Section 6(b)(4) of the Act,[5] which provides that Exchange rules may provide for the equitable allocation of reasonable dues, fees, and other charges among its Trading Permit Holders and other persons using its facilities. Additionally, the Exchange believes the proposed rule change is consistent with the Section 6(b)(5)[6] requirement that the rules of an exchange not be designed to permit unfair discrimination between customers, issuers, brokers, or dealers.

The Exchange believes the proposed ORF reduction is reasonable in that it would help the Exchange try to ensure that revenue collected from the ORF, in combination with other regulatory fees and fines, does not exceed the Exchange's total regulatory costs in light of better than expected trading volume so far in 2013 and other factors.

The Exchange believes the ORF is equitable and not unfairly discriminatory in that it is charged to all Trading Permit Holders on all their transactions that clear in the customer range at the OCC. Moreover, the Exchange believes the ORF ensures fairness by assessing higher fees to those Trading Permit Holders that require more Exchange regulatory services based on the amount of customer options business they conduct. Regulating customer trading activity is much more labor intensive and requires greater expenditure of human and technical resources than regulating non-customer trading activity, which tends to be more automated and less labor-intensive. As a result, the costs associated with administering the customer component of the Exchange's overall regulatory program are materially higher than the costs associated with administering the non-customer component (e.g., Trading Permit Holder proprietary transactions) of its regulatory program.[7]

B. Self-Regulatory Organization's Statement on Burden on Competition

CBOE does not believe that the proposed rule change will impose any burden on competition that is not necessary or appropriate in furtherance of the purposes of the Act. The proposed rule change is not designed to address any competitive issues. Rather, the proposed rule change is designed to help the Exchange to adequately fund its regulatory activities while seeking to ensure that total regulatory revenues do not exceed total regulatory costs.

C. Self-Regulatory Organization's Statement on Comments on the Proposed Rule Change Received From Members, Participants, or Others

The Exchange neither solicited nor received comments on the proposed rule change.

III. Date of Effectiveness of the Proposed Rule Change and Timing for Commission Action

The foregoing rule change has become effective pursuant to Section 19(b)(3)(A) of the Act[8] and paragraph (f) of Rule 19b–4[9] thereunder. At any time within 60 days of the filing of the proposed rule change, the Commission summarily may temporarily suspend such rule change if it appears to the Commission that such action is necessary or appropriate in the public interest, for the protection of investors, or otherwise in furtherance of the purposes of the Act. If the Commission takes such action, the Commission will institute proceedings to determine whether the proposed rule change should be approved or disapproved.

IV. Solicitation of Comments

Interested persons are invited to submit written data, views, and arguments concerning the foregoing, including whether the proposed rule change is consistent with the Act. Comments may be submitted by any of the following methods:

Electronic Comments

- Use the Commission's Internet comment form (*http://www.sec.gov/rules/sro.shtml*); or
- Send an email to *rule-comments@sec.gov.* Please include File Number SR–CBOE–2013–082 on the subject line.

Paper Comments

- Send paper comments in triplicate to Elizabeth M. Murphy, Secretary, Securities and Exchange Commission, 100 F Street NE., Washington, DC 20549–1090.

All submissions should refer to File Number SR–CBOE–2013–082. This file number should be included on the subject line if email is used. To help the Commission process and review your comments more efficiently, please use only one method. The Commission will post all comments on the Commission's Internet Web site (*http://www.sec.gov/rules/sro.shtml*). Copies of the submission, all subsequent amendments, all written statements with respect to the proposed rule change that are filed with the Commission, and all written communications relating to the proposed rule change between the Commission and any person, other than those that may be withheld from the public in accordance with the provisions of 5 U.S.C. 552, will be available for Web site viewing and printing in the Commission's Public Reference Room, 100 F Street NE., Washington, DC 20549, on official business days between the hours of 10:00 a.m. and 3:00 p.m. Copies of such filing also will be available for inspection and copying at the principal office of the Exchange. All comments received will be posted without change; the Commission does not edit personal identifying information from submissions. You should submit only information that you wish to make publicly available. All submissions should refer to File Number SR–CBOE–2013–082 and should be submitted on or before September 30, 2013.

For the Commission, by the Division of Trading and Markets, pursuant to delegated authority.[10]

Kevin M. O'Neill,

Deputy Secretary.

[FR Doc. 2013–21815 Filed 9–6–13; 8:45 am]

BILLING CODE 8011–01–P

[4] 15 U.S.C. 78f(b).

[5] 15 U.S.C. 78f(b)(4).

[6] *Id.* [sic].

[7] If the Exchange changes its method of funding regulation or if circumstances otherwise change in the future, the Exchange may decide to modify the ORF or assess a separate regulatory fee on Trading Permit Holder proprietary transactions if the Exchange deems it advisable.

[8] 15 U.S.C. 78s(b)(3)(A).

[9] 17 CFR 240.19b–4(f).

[10] 17 CFR 200.30–3(a)(12).

SECURITIES AND EXCHANGE COMMISSION

[Release No. 34–70299; File No. SR–MIAX–2013–40]

Self-Regulatory Organizations: Notice of Filing and Immediate Effectiveness of a Proposed Rule Change by Miami International Securities Exchange LLC To Amend MIAX Rule 1322, Options Communications

September 3, 2013.

Pursuant to Section 19(b)(1) of the Securities Exchange Act of 1934 (''Act'')[1] and Rule 19b–4 thereunder,[2] notice is hereby given that on August 19, 2013, Miami International Securities Exchange LLC (''MIAX'' or ''Exchange'') filed with the Securities and Exchange

[1] 15 U.S.C. 78s(b)(1).

[2] 17 CFR 240.19b–4.

Commission (the ''Commission'') a proposed rule change as described in Items I, and II below, which Items have been substantially prepared by the Exchange. The Commission is publishing this notice to solicit comments on the proposed rule from interested persons.

I. Self-Regulatory Organization's Statement of the Terms of Substance of the Proposed Rule Change

The Exchange proposes to amend MIAX Rule 1322, Options Communications. The text of the proposed rule change is available from the principal office of the Exchange, at the Commission's Public Reference Room and also on the Exchange's Internet Web site at *http://www.miaxoptions.com/.*

II. Self-Regulatory Organization's Statement of the Purpose of, and Statutory Basis for, the Proposed Rule Change

In its filing with the Commission, the Exchange included statements concerning the purpose of, and basis for, the proposed rule change and discussed any comments it received on the proposed rule change. The text of these statements may be examined at the places specified in Item IV below. The Exchange has prepared summaries, set forth in Sections A, B, and C below, of the most significant aspects of such statements.

A. Self-Regulatory Organization's Statement of the Purpose of, and Statutory Basis for, the Proposed Rule Change

1. Purpose

The Exchange proposes to amend Rule 1322, Options Communications, to conform the rule to changes recently made by the Financial Industry Regulatory Authority, Inc. (''FINRA'') to its corresponding rule.[3] The proposed changes are designed to alert Members to their requirements with respect to Options Communications while further regulating all communications for compliance with Exchange Rules and the Act. In addition, the Exchange believes that the proposed rule change will help ensure that investors are protected from potentially false or misleading communications with the public distributed by Exchange Members.

First, the Exchange proposes to amend Exchange Rule 1322(a) by reducing the number of defined categories of communication in current Rule 1322(a) from six to three. The proposed three categories of communications are: Retail communications, correspondence, and institutional communications. The current definitions of ''sales literature,'' ''advertisement,'' and ''independently prepared reprint'' would be combined into a single category of ''retail communications.'' The Exchange proposes to define ''retail communication'' as any written (including electronic) communication that is distributed or made available to more than 25 retail investors within any 30 calendar-day period. The Exchange also proposes to amend the current definition of ''correspondence'' to mean any written (including electronic) communication distributed or made available by a Member to 25 or fewer retail customers within any 30 calendar-day period. Additionally, the Exchange proposes to delete the current term, ''institutional sales material'' and replace that definition with the term ''institutional communication,'' which would include written (including electronic) communications that are distributed or made available only to institutional investors.

Second, the Exchange proposes to amend Rule 1322(b), Approval by Registered Options Principal, by replacing the phrase ''advertisements, sales literature, and independently prepared reprints'' in Rule 1322(b)(1) with the new proposed term, ''retail communications.''

Under proposed Rule 1322(b)(2), correspondence would need not need to be approved by a Registered Options Principal prior to use but would be subject to the supervision and review requirements of Rule 1308. The Exchange proposes to delete the provision requiring principal approval of correspondence that is distributed to 25 or more existing retail customers within a 30 calendar-day period that makes any financial or investment recommendation or otherwise promotes the product or service of a Member. Under proposed Rule 1322(b), such communications would be considered ''retail communications'' and therefore remain subject to the principal approval requirement under the proposed new definition. As such, the proposed rule change would not substantively change the scope of options communications that would require principal approval.

Third, the Exchange proposes to establish the required approvals of institutional communications, currently known as institutional sales material. Specifically, the Exchange proposes to delete the current requirements for institutional sales material and add that Members shall establish written procedures that are appropriate to its business, size, structure, and customers for review by a Registered Options Principal of institutional communications used by the Member.

Fourth, the Exchange proposes to amend Rule 1322(c) by replacing the phrase ''advertisements, sales literature, and independently prepared reprints'' with the new proposed term, ''retail communications.'' The Exchange also proposes to further exempt the options disclosure document (''ODD'') and prospectuses from Exchange review as other requirements apply to these documents under the Securities Act of 1933.

Fifth, the Exchange proposes to specify in Rule 1322(d) that no Member or associated person may use any options communications that ''constitute a prospectus'' unless the communications meet the requirements of the Securities Act, and further specifying that any statement in any options communications referring to the potential opportunities or advantages presented by options shall be balanced by a statement of the corresponding risks. The risk statement shall reflect the same degree of specificity as the statement of opportunities, and broad generalities must be avoided. This language is identical to language contained in current Rule 1322(d)(5), which is proposed to be deleted.

2. Statutory Basis

The Exchange believes that the proposed rule change is consistent with Section 6(b) of the Act,[4] in general, and furthers the objectives of Section 6(b)(5) of the Act,[5] in particular, in that it is designed to prevent fraudulent and manipulative acts and practices, to promote just and equitable principles of trade, to foster cooperation and coordination with persons engaged in facilitating transactions in securities, to remove impediments to and perfect the mechanisms of a free and open market and a national market system and, in

[3] *See* Securities Exchange Act Release No. 68650 (January 14, 2013), 78 FR 4182 (January 18, 2013) (SR–FINRA–2013–001) (Notice of Filing and Immediate Effectiveness of Proposed Rule Change to Update Cross-References and Make Other Non-Substantive Changes Within FINRA Rules and By-Laws). *See also* Securities Exchange Act Release 69807 (June 20, 2013), 78 FR 38423 (June 26, 2013) (SR–CBOE–2013–043) (Order Approving a Proposed Rule Change Relating to Exchange Rule 9.21) and Securities Exchange Act Release No. 70070 (July 30, 2013), 78 FR 47476 (August 5, 2013) (SR–BOX–2013–037) (Notice of Filing and Immediate Effectiveness of a Proposed Rule Change To Amend BOX Rule 4170 (Options Communications)).

[4] 15 U.S.C. 78f(b).

[5] 15 U.S.C. 78f(b)(5).

general, to protect investors and the public interest.

In particular, the Exchange believes the proposed rule changes will provide greater clarity to Members and the public regarding the Exchange's Rules. In addition, the Exchange believes that the proposed rule change will help ensure that investors are protected from potentially false or misleading communications with the public distributed by Exchange Members.

B. Self-Regulatory Organization's Statement on Burden on Competition

The Exchange does not believe that the proposed rule change will impose any burden on competition not necessary or appropriate in furtherance of the purposes of the Act. In this regard and as indicated above, the Exchange notes that the rule change being proposed is substantially similar to filings submitted by other options exchanges and recently approved by the Commission.[6] The Exchange believes this proposed rule change is necessary to establish uniform rules regarding Options Communications.[7]

Specifically, the proposed rule change will bring clarity and consistency to Exchange Rules. The Exchange does not believe the proposed rule change will impose any burden on intramarket competition as it applies to all Members. In addition, the Exchange does not believe the proposed rule change will bring any unnecessary burden on intermarket competition as it is consistent with the FINRA Options Communications rule.

C. Self-Regulatory Organization's Statement on Comments on the Proposed Rule Change Received From Members, Participants, or Others

Written comments were neither solicited nor received.

III. Date of Effectiveness of the Proposed Rule Change and Timing for Commission Action

MIAX has filed the proposed rule change pursuant to Section 19(b)(3)(A)[8] of the Act and Rule 19b–4(f)(6) thereunder.[9] Because the foregoing proposed rule change does not: (i) Significantly affect the protection of investors or the public interest; (ii) impose any significant burden on competition; and (iii) become operative for 30 days after the date of the filing, or such shorter time as the Commission may designate, it has become effective pursuant to Section 19(b)(3)(A) of the Act[10] and Rule 19b–4(f)(6) thereunder.

A proposed rule change filed under Rule 19b–4(f)(6)[11] normally does not become operative for 30 days after the date of filing. However, pursuant to Rule 19b–4(f)(6)(iii)[12] the Commission may designate a shorter time if such action is consistent with the protection of investors and the public interest. MIAX has asked the Commission to waive the 30-day operative delay so that the proposal may become operative immediately upon filing.

The Commission believes that waiving the 30-day operative delay is consistent with the protection of investors and the public interest, as it will it will ensure fair competition among the exchanges by allowing the Exchange to conform with changes recently made by FINRA. For these reasons, the Commission designates the proposed rule change to be operative upon filing.[13]

At any time within 60 days of the filing of the proposed rule change, the Commission summarily may temporarily suspend such rule change if it appears to the Commission that such action is necessary or appropriate in the public interest, for the protection of investors, or otherwise in furtherance of the purposes of the Act. If the Commission takes such action, the Commission shall institute proceedings to determine whether the proposed rule should be approved or disapproved.

IV. Solicitation of Comments

Interested persons are invited to submit written data, views, and arguments concerning the foregoing, including whether the proposed rule change is consistent with the Act. Comments may be submitted by any of the following methods:

Electronic Comments

- Use the Commission's Internet comment form (*http://www.sec.gov/rules/sro.shtml*); or
- Send an email *to rule-comments@sec.gov.* Please include File Number SR–MIAX–2013–40 on the subject line.

Paper Comments

- Send paper comments in triplicate to Elizabeth M. Murphy, Secretary, Securities and Exchange Commission, 100 F Street NE., Washington, DC 20549–1090.

All submissions should refer to File Number SR–MIAX–2013–40. This file number should be included on the subject line if email is used. To help the Commission process and review your comments more efficiently, please use only one method. The Commission will post all comments on the Commission's Internet Web site *(http://www.sec.gov/rules/sro.shtml).*

Copies of the submission, all subsequent amendments, all written statements with respect to the proposed rule change that are filed with the Commission, and all written communications relating to the proposed rule change between the Commission and any person, other than those that may be withheld from the public in accordance with the provisions of 5 U.S.C. 552, will be available for Web site viewing and printing in the Commission's Public Reference Room, 100 F Street NE., Washington, DC 20549, on official business days between the hours of 10:00 a.m. and 3:00 p.m. Copies of the filing also will be available for inspection and copying at the principal office of the Exchange. All comments received will be posted without change; the Commission does not edit personal identifying information from submissions. You should submit only information that you wish to make available publicly.

All submissions should refer to File Number SR–MIAX–2013–40 and should be submitted on or before September 30, 2013. For the Commission, by the Division of Trading and Markets, pursuant to delegated authority.[14]

Kevin M. O'Neill,

Deputy Secretary.

[FR Doc. 2013–21813 Filed 9–6–13; 8:45 am]

BILLING CODE 8011–01–P

[6] *See supra* note 3.

[7] *Id.*

[8] 15 U.S.C. 78s(b)(3)(A).

[9] 17 CFR 240.19b–4(f)(6). In addition, Rule 19b–4(f)(6)(iii) requires the Exchange to provide the Commission with written notice of its intent to file the proposed rule change, along with a brief description and text of the proposed rule change, at least five business days prior to the date of filing of the proposed rule change, or such shorter time as designated by the Commission. The Exchange has satisfied this requirement.

[10] 15 U.S.C. 78s(b)(3)(A).

[11] 17 CFR 240.19b–4(f)(6).

[12] 17 CFR 240.19b–4(f)(6)(iii).

[13] For purposes of waiving the 30-day operative delay, the Commission has considered the proposed rule's impact on efficiency, competition and capital formation. *See* 15 U.S.C. 78c(f).

[14] 17 CFR 200.30–3(a)(12).

SECURITIES AND EXCHANGE COMMISSION

[File No. 500–1]

Anhui Taiyang Poultry Co., Inc.; a/k/a The Parkview Group, Inc.; Business Development Solutions, Inc., and Tsingyuan Brewery Ltd.; Order of Suspension of Trading

September 5, 2013.

It appears to the Securities and Exchange Commission that there is a lack of current and accurate information concerning the securities of Anhui Taiyang Poultry Co., Inc. a/k/a The Parkview Group, Inc. because it has not filed any periodic reports since the period ended September 30, 2011.

It appears to the Securities and Exchange Commission that there is a lack of current and accurate information concerning the securities of Business Development Solutions, Inc. because it has not filed any periodic reports since the period ended December 31, 2010.

It appears to the Securities and Exchange Commission that there is a lack of current and accurate information concerning the securities of Tsingyuan Brewery Ltd. because it has not filed any periodic reports since the period ended September 30, 2011.

The Commission is of the opinion that the public interest and the protection of investors require a suspension of trading in the securities of the above-listed companies. Therefore, it is ordered, pursuant to Section 12(k) of the Securities Exchange Act of 1934, that trading in the securities of the above-listed companies is suspended for the period from 9:30 a.m. EDT on September 5, 2013, through 11:59 p.m. EDT on September 18, 2013.

By the Commission.

Jill M. Peterson,

Assistant Secretary.

[FR Doc. 2013–21969 Filed 9–5–13; 4:15 pm]

BILLING CODE 8011–01–P

SECURITIES AND EXCHANGE COMMISSION

[File No. 500–1]

China Cablecom Holdings Ltd., Order of Suspension of Trading

September 5, 2013.

It appears to the Securities and Exchange Commission that there is a lack of current and accurate information concerning the securities of China Cablecom Holdings Ltd. (n/k/a China Cablecom Ltd.) because it has not filed any periodic reports since the period ended December 31, 2010.

The Commission is of the opinion that the public interest and the protection of investors require a suspension of trading in the securities of the above-listed company. Therefore, it is ordered, pursuant to Section 12(k) of the Securities Exchange Act of 1934, that trading in the securities of the above-listed company is suspended for the period from 9:30 a.m. EDT on September 5, 2013, through 11:59 p.m. EDT on September 18, 2013.

By the Commission.

Jill M. Peterson,

Assistant Secretary.

[FR Doc. 2013–21970 Filed 9–5–13; 4:15 pm]

BILLING CODE 8011–01–P

DEPARTMENT OF STATE

[Public Notice 8453]

Culturally Significant Object Imported for Exhibition Determinations: ''Iran Modern''

ACTION: Notice, correction.

SUMMARY: On August 8, 2013, notice was published on page 48539 of the **Federal Register** (volume 78, number 153) of determinations made by the Department of State pertaining to the exhibit ''Iran Modern.'' The referenced notice is corrected to accommodate an additional object to be included in the exhibition. Pursuant to the authority vested in me by the Act of October 19, 1965 (79 Stat. 985; 22 U.S.C. 2459), Executive Order 12047 of March 27, 1978, the Foreign Affairs Reform and Restructuring Act of 1998 (112 Stat. 2681, *et seq.;* 22 U.S.C. 6501 note, *et seq.*), Delegation of Authority No. 234 of October 1, 1999, and Delegation of Authority No. 236–3 of August 28, 2000 (and, as appropriate, Delegation of Authority No. 257 of April 15, 2003), I hereby determine that the additional object to be included in the exhibition ''Iran Modern,'' imported from abroad for temporary exhibition within the United States, is of cultural significance. The additional object is imported pursuant to a loan agreement with the foreign owner or custodian. I also determine that the exhibition or display of the additional exhibit object at The Asia Society in New York, New York, from on or about September 6, 2013, until on or about January 5, 2014, and at possible additional exhibitions or venues yet to be determined, is in the national interest. I have ordered that Public Notice of these Determinations be published in the **Federal Register**.

FOR FURTHER INFORMATION CONTACT: For further information, including a list of the exhibit objects that includes this additional object, contact Ona M. Hahs, Attorney-Adviser, Office of the Legal Adviser, U.S. Department of State (telephone: 202–632–6473). The mailing address is U.S. Department of State, SA–5, L/PD, Fifth Floor (Suite 5H03), Washington, DC 20522–0505.

Dated: August 29, 2013.

Lee Satterfield,

Deputy Assistant Secretary for Professional and Cultural Exchanges, Bureau of Educational and Cultural Affairs, Department of State.

[FR Doc. 2013–21882 Filed 9–6–13; 8:45 am]

BILLING CODE 4710–05–P

DEPARTMENT OF STATE

[Public Notice 8457]

Waiver of Restriction on Assistance to the Central Government of Uzbekistan

Pursuant to Section 7031 (b)(3) of the Department of State, Foreign Operations, and Related Programs Appropriations Act, 2012 (Division I, Pub. L. 112–74) (''the Act''), and Department of State Delegation of Authority Number 245–1, I hereby determine that it is important to the national interest of the United States to waive the requirements of Section 7031 (b)(1) of the Act with respect to Uzbekistan and I hereby waive this restriction.

This determination and accompanying Memorandum of Justification shall be reported to the Congress, and the determination shall be published in the **Federal Register.**

Dated: May 7, 2012.

Thomas R. Nides,

Deputy Secretary for Management and Resources.

Editorial Note: This document was received at the Office of the Federal Register September 4, 2013.

[FR Doc. 2013–21885 Filed 9–6–13; 8:45 am]

BILLING CODE 4710–03–P

DEPARTMENT OF STATE

[Public Notice 8456]

Waiver of Restriction on Assistance to the Central Government of the Kyrgyz Republic

Pursuant to Section 7031(b)(3) of the Department of State, Foreign Operations, and Related Programs Appropriations Act, 2012 (Div. I, Pub. L. 112–74) (''the Act''), and Department of State Delegation of Authority Number 245–1, I hereby determine that it is important to the national interest of the

United States to waive the requirements of Section 7031(b)(1) of the Act with respect to the Kyrgyz Republic, and I hereby waive this restriction.

This determination and accompanying Memorandum of Justification shall be reported to the Congress, and the determination shall be published in the **Federal Register**.

Dated: April 11, 2012.

Thomas R. Nides,

Deputy Secretary for Management and Resources.

Editorial Note: This document was received at the Office of the Federal Register September 4, 2013.

[FR Doc. 2013–21881 Filed 9–6–13; 8:45 am]

BILLING CODE 4710–03–P

DEPARTMENT OF STATE

[Public Notice 8454]

Waiver of Restriction on Assistance to the Central Government of Turkmenistan

Pursuant to Section 7031 (b)(3) of the Department of State, Foreign Operations, and Related Programs Appropriations Act, 2012 (Div. I, Pub. L. 112–74) (''the Act''), and Department of State Delegation of Authority Number 245–1, I hereby determine that it is important to the national interest of the United States to waive the requirements of Section 7031 (b)(1) of the Act with respect to Turkmenistan, and I hereby waive this restriction.

This determination and accompanying Memorandum of Justification shall be reported to the Congress, and the determination shall be published in the **Federal Register**.

Dated: April 23, 2013.

Thomas R. Nides,

Deputy Secretary for Management and Resources.

[FR Doc. 2013–21872 Filed 9–6–13; 8:45 am]

BILLING CODE 4710–03–P

DEPARTMENT OF STATE

[Public Notice 8455]

Waiver of Restriction on Assistance to the Central Government of Tajikistan

Pursuant to Section 7031 (b)(3) of the Department of State, Foreign Operations, and Related Programs Appropriations Act, 2012 (Div. I, Pub. L. 112–74) (''the Act''), and Department of State Delegation of Authority Number 245–1, I hereby determine that it is important to the national interest of the United States to waive the requirements of Section 7031 (b)(1) of the Act with respect to Tajikistan and I hereby waive this restriction.

This determination and accompanying Memorandum of justification shall be reported to the Congress, and the determination shall be published in the **Federal Register**.

Dated: June 13, 2012.

Thomas R. Nides,

Deputy Secretary for Management and Resources.

Editorial Note: This document was received at the Office of the Federal Register September 4, 2013.

[FR Doc. 2013–21878 Filed 9–6–13; 8:45 am]

BILLING CODE 4710–03–P

OFFICE OF THE UNITED STATES TRADE REPRESENTATIVE

Request for Comments on Additional Participants in Trade in Services Agreement

AGENCY: Office of the United States Trade Representative.

ACTION: Request for comments.

SUMMARY: On January 15, 2013, the United States Trade Representative notified Congress of the Administration's intention to enter into negotiations for a Trade in Services Agreement (TISA) with an initial group of 20 trading partners. The January 15 notification states that the group negotiating TISA ''will expand as negotiations progress to include others who share our ambitious goals. This expansion will help further U.S. objectives for this agreement rather than change them.'' The TISA negotiating countries agree that two additional trading partners, Paraguay and Liechtenstein, are willing and able to meet the high standards envisioned for the agreement. The negotiating countries have formed a consensus to allow these new participants to join the negotiations. The Office of the United States Trade Representative (USTR) is seeking public comments regarding particular priorities with respect to the participation of these two countries in the negotiations.

DATES: Written comments are due by October 4, 2013.

ADDRESSES: *Submissions via on-line: http://www.regulations.gov.* For alternatives to on-line submissions please contact Yvonne Jamison at (202) 395–3475.

FOR FURTHER INFORMATION CONTACT: For questions concerning requirements for written comments, please contact Yvonne Jamison at (202) 395–3475. All other questions regarding this notice should be directed to Thomas Fine at (202) 395–6875.

SUPPLEMENTARY INFORMATION: On January 15, 2013, Ambassador Kirk notified Congress of the Administration's intention to enter into the TISA negotiations. The TISA negotiations will be compatible with and will build upon the WTO General Agreement on Trade in Services, because TISA partners are aiming for a high-standard agreement, which, at some point in the future, may be brought under the auspices of the WTO Agreement.

The following 20 trading partners constituted the initial group of TISA participants: Australia, Canada, Chile, Chinese Taipei, Colombia, Costa Rica, European Union on behalf of its member states, Hong Kong China, Iceland, Israel, Japan, Korea, Mexico, New Zealand, Norway, Pakistan, Panama, Peru, Switzerland, and Turkey. USTR solicited public comments on the agreement through a notification published in the **Federal Register** on January 24, 2013 (Document number: 2013–01497). Comments received through that process may be reviewed at *http://www.regulations.gov* under docket number USTR–2013–0001.

With the addition of Paraguay and Liechtenstein to the negotiating group, the Chair of the interagency Trade Policy Staff Committee (TPSC) now invites interested persons to provide written comments that will assist USTR in assessing U.S. objectives with regard to their participation. The TPSC Chair invites comments on all relevant matters, and, in particular, with regard to the nature of any existing barriers to trade in services with these markets or issues affecting the supply of services to these markets through various modes of supply and technologies.

Public Comment: Requirements for Submissions

Persons submitting written comments must do so in English and must identify (on the first page of the submission) ''Trade in Services Agreement: New Participants—Paraguay and Liechtenstein.'' In order to be assured of consideration, comments should be submitted by October 4, 2013. In order to ensure the timely receipt and consideration of comments, USTR strongly encourages commenters to make on-line submissions, using the *http://www.regulations.gov* Web site. Comments should be submitted under the following docket: USTR–2013–0029. To find the docket, enter the docket number in the ''Enter Keyword or ID'' window at the *http://www.regulations.gov* home page and

click ''Search.'' The site will provide a search-results page listing all documents associated with this docket. Find a reference to this notice by selecting ''Notices'' under ''Document Type'' on the search-results page, and click on the link entitled ''Comment Now!'' (For further information on using the *http://www.regulations.gov* Web site, please consult the resources provided on the Web site by clicking on the ''Help'' tab.)

The *http://www.regulations.gov* Web site provides the option of making submissions by filling in a ''Type Comment'' field, or by attaching a document using the ''Upload File'' field. USTR prefers submissions to be provided in an attached document. If a document is attached, it is sufficient to type ''See attached'' in the ''Type Comment'' field. USTR also prefers submissions in Microsoft Word (.doc) or Adobe Acrobat (.pdf). If the submission is in an application other than those two, please indicate the name of the application in the ''Comments'' field. For any comments submitted electronically containing business confidential information, the file name of the business confidential version should begin with the characters ''BC.'' Any page containing business confidential information must be clearly marked ''BUSINESS CONFIDENTIAL'' on the top of that page. Filers of submissions containing business confidential information must also submit a public version of their comments. The file name of the public version should begin with the character ''P.'' The ''BC'' and ''P'' should be followed by the name of the person or entity submitting the comments or reply comments. Filers submitting comments containing no business confidential information should name their file using the name of the person or entity submitting the comments. Please do not attach separate cover letters to electronic submissions; rather, include any information that might appear in a cover letter in the comments themselves. Similarly, to the extent possible, please include any exhibits, annexes, or other attachments in the same file as the submission itself, not as separate files.

USTR strongly urges submitters to file comments through *http://www.regulations.gov,* if at all possible. Any alternative arrangements must be made with Yvonne Jamison in advance of transmitting a comment. Ms. Jamison should be contacted at (202) 395–3475.

General information concerning USTR is available at *http://www.ustr.gov.*

Public Inspection of Submissions

Comments will be placed in the docket and open to public inspection, except business confidential information. Comments may be viewed on the *http:www.regulations.gov* Web site by entering the relevant docket number in the search field on the home page.

Douglas Bell,

Chair, Trade Policy Staff Committee.

[FR Doc. 2013–21836 Filed 9–6–13; 8:45 am]

BILLING CODE 3290–F3–P

DEPARTMENT OF TRANSPORTATION

Federal Aviation Administration

[Summary Notice No. PE–2013–43]

Petition for Exemption; Summary of Petition Received

AGENCY: Federal Aviation Administration (FAA), DOT.

ACTION: Notice of petition for exemption received.

SUMMARY: This notice contains a summary of a petition seeking relief from specified requirements of Title 14, Code of Federal Regulations (CFR) part 25. The purpose of this notice is to improve the public's awareness of, and participation in, this aspect of FAA's regulatory activities. Neither publication of this notice nor the inclusion or omission of information in the summary is intended to affect the legal status of the petition or its final disposition.

DATES: Comments on this petition must identify the petition docket number involved and must be received on or before September 30, 2013.

ADDRESSES: You may send comments identified by Docket Number FAA–2013–0745 using any of the following methods:

- *Government-wide rulemaking Web site:* Go to *http://www.regulations.gov* and follow the instructions for sending your comments electronically.
- *Mail:* Send comments to the Docket Management Facility; U.S. Department of Transportation, 1200 New Jersey Avenue SE., West Building Ground Floor, Room W12–140, Washington, DC 20590.
- *Fax:* Fax comments to the Docket Management Facility at 202–493–2251.
- *Hand Delivery:* Bring comments to the Docket Management Facility in Room W12–140 of the West Building Ground Floor at 1200 New Jersey Avenue SE., Washington, DC, between 9 a.m. and 5 p.m., Monday through Friday, except Federal holidays.

Privacy: We will post all comments we receive, without change, to *http://www.regulations.gov,* including any personal information you provide. Using the search function of our docket Web site, anyone can find and read the comments received into any of our dockets, including the name of the individual sending the comment (or signing the comment for an association, business, labor union, etc.). You may review DOT's complete Privacy Act Statement in the **Federal Register** published on April 11, 2000 (65 FR 19477–78).

Docket: To read background documents or comments received, go to *http://www.regulations.gov* at any time or to the Docket Management Facility in Room W12–140 of the West Building Ground Floor at 1200 New Jersey Avenue SE., Washington, DC, between 9 a.m. and 5 p.m., Monday through Friday, except Federal holidays.

FOR FURTHER INFORMATION CONTACT: Michael Menkin, ANM–113, Standardization Branch, Federal Aviation Administration, Transport Airplane Directorate, 1601 Lind Ave. SW., Renton, WA 98057; email *michael.menkin@FAA.gov;* 425–227–2793; fax: 425–227–1320; or Andrea Copeland, ARM–200, Office of Rulemaking, Federal Aviation Administration, 800 Independence Avenue SW.; Washington, DC 20591; email *andrea.copeland @faa.gov;* (202) 267–8081.

Issued in Washington, DC, on September 4, 2013.

Lirio Liu,

Director, Office of Rulemaking.

Petition For Exemption

Docket No.: FAA–2013–0745.

Petitioner: Boeing Commercial Airplane Company.

Section of 14 CFR Affected: § 25.841(a)(2) and (a)(3) at Amendment 87.

Description of Relief Sought. The petitioner requests relief from the requirements pertaining to cabin decompression following uncontained engine failures for the Boeing Model 737–7, 737–8, and 737–9 airplanes.

[FR Doc. 2013–21832 Filed 9–6–13; 8:45 am]

BILLING CODE 4910–13–P

FEDERAL REGISTER

Vol. 78 Monday,

No. 174 September 9, 2013

Part II

Department of Transportation

National Highway Traffic Safety Administration

49 CFR Part 571

Federal Motor Vehicle Safety Standards; Ejection Mitigation; Final Rule

DEPARTMENT OF TRANSPORTATION

National Highway Traffic Safety Administration

49 CFR Part 571

[Docket No. NHTSA–2013–0097]

RIN 2127–AL40

Federal Motor Vehicle Safety Standards; Ejection Mitigation

AGENCY: National Highway Traffic Safety Administration (NHTSA), Department of Transportation.

ACTION: Final rule; response to petitions for reconsideration.

SUMMARY: This document responds to petitions for reconsideration of a 2011 final rule that established Federal Motor Vehicle Safety Standard (FMVSS) No. 226, ''Ejection mitigation.'' The standard is intended to reduce complete and partial ejections of vehicle occupants through side windows in crashes, particularly rollover crashes. Generally, the issues raised by the petitioners are of two types. The petitioners ask for reconsideration of policy issues relating to the agency's implementation of the standard, and of technical issues concerning engineering aspects of the rule, particularly as to how the compliance test procedure should be conducted or improved. Most of the requested changes were of the latter type. In general, NHTSA is denying the petitions for reconsideration. The few changes we have made in response to the petitions are minor, mostly to clarify the requirements of the standard.

DATES: *Effective date:* The date on which this final rule amends the CFR is October 9, 2013.

If you wish to petition for reconsideration of this rule, your petition must be received by October 24, 2013.

ADDRESSES: If you wish to petition for reconsideration of this rule, you should refer in your petition to the docket number of this document and submit your petition to: Administrator, National Highway Traffic Safety Administration, 1200 New Jersey Avenue SE., West Building, Washington, DC 20590.

The petition will be placed in the docket. Anyone is able to search the electronic form of all documents received into any of our dockets by the name of the individual submitting the comment (or signing the comment, if submitted on behalf of an association, business, labor union, etc.). You may review DOT's complete Privacy Act Statement in the **Federal Register** published on April 11, 2000 (Volume 65, Number 70; Pages 19477–78).

FOR FURTHER INFORMATION CONTACT: For non-legal issues, you may call Louis Molino, NHTSA Office of Crashworthiness Standards, telephone 202–366–1740. For legal issues, you may call Deirdre R. Fujita, NHTSA Office of Chief Counsel, telephone 202–366–2992. You may send mail to these officials at the following address: National Highway Traffic Safety Administration, 1200 New Jersey Avenue SE., West Building, Washington, DC 20590.

SUPPLEMENTARY INFORMATION:

Table of Contents

I. Background
II. Petitions for Reconsideration
III. Response to Petitions Relating to Implementation of the Standard
  a. Lead Time and Phase-In Schedule
  b. Applicability
  1. Vehicles With Partitions With Doors
  2. School Buses
  c. Displacement Limit—Issue 1
  d. Displacement Limit—Issue 2
IV. Response to Petitions Regarding Technical Issues
V. Determination of Impact Target Locations—Boundary of Target Locations
  a. Rearmost Limit of the Offset Line
  b. Grab Handles
  c. Removal of Components During Targeting
VI. Primary Target Locations
  a. Determination of the Geometric Center of the Daylight Opening
  b. Targeting Large Radius Windows
VII. Target Adjustment
  a. Coordinate System
  b. Target Reconstitution
  c. Rotating the Headform
VIII. Targeting Accuracy
IX. Glazing
  a. Applying Pre-Breaking Procedure
  b. Pre-Breaking Procedure Applies to All Glazing
  c. Meaning of ''Movable Glazing''
  d. Hinges and Latches
  e. Side Daylight Opening When There Is No Divider
X. Other Aspects of the Test Procedure
  a. Headform Cleaning
  b. Vehicle Test Attitude
  c. Inspect Air Bag Mounts
XI. Secondary Issues
  a. Other Typographical Errors
  b. Views on a Dynamic Test Procedure
XII. Rulemaking Analyses and Notices

I. Background

On January 19, 2011, NHTSA published a final rule establishing FMVSS No. 226, ''Ejection mitigation,'' to reduce complete and partial ejections of vehicle occupants through side windows in crashes, particularly rollover crashes (76 FR 3212; Docket No. NHTSA–2011–0004; corrected 76 FR 10524, February 25, 2011).[1] To meet the requirements of FMVSS No. 226, vehicle manufacturers will avail themselves of the side curtain air bag technologies that are already being installed in vehicles to meet FMVSS No. 214, ''Side impact protection.'' In response to the 2011 final rule, manufacturers will enhance these side curtain air bags to make them larger to cover more of the window opening, more robust to remain inflated longer, and more advanced to deploy in side impacts and in rollovers. Further, the curtains will be made not only to cushion but also to be sufficiently strong to reduce the likelihood that an occupant will be fully or partially ejected through a side window.[2]

To assess compliance, the agency adopted a test in which an impactor is propelled from inside a test vehicle toward the windows. The impactor mass, 18 kg (40 lb), is based on the mass imposed by a 50th percentile male's head and upper torso on the window opening during an occupant ejection. The impactor mass is propelled at points around the window's perimeter with sufficient kinetic energy to assure that the ejection mitigation countermeasure is able to protect a far-reaching range of occupants in real world crashes. The vehicle must prevent the impactor from moving more than a specified distance beyond the plane of a window (the impactor must not travel more than 100 millimeters (mm) beyond the location of the inside surface of the vehicle glazing). To ensure that the systems cover the entire opening of each window for the duration of a rollover, each side window will be impacted at up to four locations around its perimeter at two time intervals following deployment.

The standard applies to the side windows next to the first three rows of seats, or next to a cargo area behind the first or second row in vehicles that do not have a second or third row, in motor vehicles with a gross vehicle weight rating (GVWR) of 4,536 kg (10,000 lb) or less. The final rule adopted a phase-in of the new requirements, which begins September 1, 2013.

The final rule achieves tremendous benefits at reasonable costs. We estimate that the rule will save 373 lives and

[1] The notice of proposed rulemaking preceding the final rule was published on December 2, 2009 (74 FR 63180, Docket No. NHTSA–2009–0183).

[2] The final rule responded to sec. 10301 of the Safe, Accountable, Flexible, Efficient Transportation Equity Act: A Legacy for Users,'' (SAFETEA–LU), Public Law 109–59 (Aug. 10, 2005; 119 Stat. 1144), which requires the Secretary of Transportation to issue an ejection mitigation final rule reducing complete and partial ejections of occupants from outboard seating positions.

prevent 476 serious injuries per year (see Table 1 below). The cost of the final rule is approximately $31 per vehicle (see Table 2). The cost per equivalent life saved is estimated to be $1.4 million (3 percent discount rate)—$1.7 million (7 percent discount rate) (see Table 3 below). Annualized costs and benefits are provided in Table 4.

TABLE 1—ESTIMATED BENEFITS OF THE FINAL RULE

Fatalities	373
Serious Injuries	476

TABLE 2—ESTIMATED COSTS* (2009 ECONOMICS) OF THE FINAL RULE

Per Vehicle	$31.
Total Fleet (16.5 million vehicles).	507 million.

*The system costs are based on vehicles that are equipped with an FMVSS No. 214 side curtain air bag system. According to vehicle manufacturers' projections made in 2006, 98.7 percent of Model Year (MY) 2011 vehicles will be equipped with curtain bags and 55 percent of vehicles with curtain bags will be equipped with a rollover sensor.

TABLE 3—COST PER EQUIVALENT LIFE SAVED OF THE FINAL RULE

3% Discount Rate	7% Discount Rate.
$1.4M	$1.7M.

TABLE 4—ANNUALIZED COSTS AND BENEFITS IN MILLIONS OF $2009 DOLLARS

	Annual costs	Annualized benefits	Net benefits
3% Discount Rate	$507M	$2,279M	$1,773
7% Discount Rate	507M	1,814M	1,307

II. Petitions for Reconsideration

NHTSA received petitions for reconsideration of the final rule from: The Alliance of Automobile Manufacturers (Alliance), Mercedes-Benz USA (Mercedes-Benz), Porsche Cars North America (Porsche), Daimler Trucks North America (Daimler Trucks), Advocates for Highway & Auto Safety (Advocates), the National Truck Equipment Association (NTEA), TRW Vehicle Safety Systems (TRW), and the Automotive Occupant Restraints Council (AORC)/Automotive Safety Council (ASC).[3] The School Bus Manufacturers Technical Council (SBMTC) submitted a letter asking for confirmation of its understanding of an aspect of the final rule.

Generally, the issues raised by the petitioners are of two types. Some petitioners ask for reconsideration of policy issues relating to the agency's implementation of the standard, and many raise technical issues relating to engineering aspects of the rule, such as how the compliance test procedure should be conducted or improved. Most of the requested changes in the petitions are of the latter type.

The petitioners' requests relating to policy issues pertain to lead time (the Alliance, Mercedes-Benz, and Porsche request NHTSA to provide more lead time and reduced phase-in percentages related to the compliance date and phase-in requirements), and the applicability of the standard to certain particular vehicle types (NTEA asks for a change with regard to vehicles with a partition that has a door; Daimler Trucks asks that school buses be excluded from the standard). A petitioner (Advocates) requests reducing the displacement limit (Advocates petitions to reduce the 100 mm displacement limit to 50 mm), and asks for a change regarding how openings are to be tested, to prevent what the petitioner calls ''minimal designs.''

With regard to technical aspects of the test procedure, some petitioners (the Alliance, TRW, AORC) ask for reconsideration or clarification of the procedure for determining target locations, such as where the rearward boundary of the target locations should be, and how grab handles should be treated), and the procedures for identifying primary target locations and for adjusting the targets (reconstituting and rotating targets). Several petitioners ask for changes or clarification regarding glazing issues. In addition, a few petitioners point out typographical and other errors in need of correction.

In general, NHTSA is denying the petitions for reconsideration that request substantive changes to the standard. One substantive change we make, in response to NTEA, is to specify that for vehicles with a partition separating an occupant seating area from a cargo area, the partition may have a door. The other changes we have made in response to the petitions are mostly to clarify the requirements of the standard or to correct typographical errors in the regulatory text.

Briefly, this final rule:

Adds a definition of ''movable glazing'' (S3 is amended);

Specifies that for vehicles with a partition separating an occupant seating area from a cargo area, the partition may have a door (S5.2.1.2(c));

Clarifies the regulatory text describing the procedure for target elimination (S5.2.5.1.1), and adds new figures 5a and 5b for clarification purposes;

Clarifies the regulatory text for target reorientation, 90 degree rotation (S5.2.5.2);

Corrects typographic errors in the regulatory text for target reorientation incremental rotation (S5.2.5.3); and,

Clarifies the regulatory text for targeting accuracy (S7.4).

These and other issues are discussed in the sections below.

III. Response to Petitions Relating to Implementation of the Standard

a. Lead Time and Phase-In Schedule

The final rule provided two years of lead time and a multi-year phase-in period, and provided for the use of credits during the phase-in period. In the final rule, the agency significantly reduced the impact velocity of the high speed impact test (performed at 1.5 seconds after deployment of the ejection mitigation side curtain air bag) from 24 kilometers per hour (km/h) (proposed in the NPRM) to 20 km/h (adopted in the final rule). To accelerate the benefits provided by the new FMVSS, after considering a number of factors, including the reduction in impactor speed, the agency in the final rule provided a shorter lead time than the lead time proposed in the NPRM, and

[3] In 2011, AORC changed its name to the Automotive Safety Council (ASC). We will refer to the group as ''ASC.''

adopted phase-in percentages higher than those in the NPRM.[4] The agency determined that the reduced impact speed will result in fewer changes having to be made to existing vehicle designs to meet the final rule's requirements, and so less lead time was needed to begin phasing in the requirements across the fleet. The phase-in percentages could be increased since more vehicles could be certified to the standard. At the same time, to enhance flexibility to manufacturers in developing plans and applying resources toward certifying to the standard, the final rule allowed the use of credits in the 100 percent phase-in year, which is a year longer into the phase-in period than the NPRM would have allowed use of credits.

Under the final rule, starting September 1, 2013, a percentage of the manufacturer's average annual production of vehicles manufactured in the three previous production years, or the manufacturer's production in the current production year, must be certified as meeting FMVSS No. 226. The phase-in schedule is as follows: [5]

TABLE 5—FINAL RULE LEAD TIMES AND PHASE-IN SCHEDULE

For vehicles manufactured on or after the first date and before the second date	The number of vehicles certified to FMVSS No. 226 shall be not less than this percent of the manufacturer's annual production of vehicles	May credits be used?
On or after September 1, 2013; before September 1, 2014	25 percent	Yes.
On or after September 1, 2014; before September 1, 2015	50 percent	Yes.
On or after September 1, 2015; before September 1, 2016	75 percent	Yes.
On or after September 1, 2016; before September 1, 2017	100 percent	Yes.
On or after September 1, 2017	All vehicles, without use of credits	No.

Reconsideration Requests

The Alliance, Mercedes-Benz, and Porsche submitted petitions for reconsideration of the lead time and phase-in schedule.

Alliance Petition

The Alliance requests that the lead time for the beginning of the phase-in be changed to begin on September 1, 2015, and that the phase-in percentages be changed to: 20 percent, 40 percent, 75 percent, 100 percent (with use of credits) and all vehicles (without use of credits). For convenience, the petitioner's suggested phase-in percentages are shown in the following Table 6.

TABLE 6—COMPARISON OF LEAD TIMES AND PHASE-IN SCHEDULES—FINAL RULE TO ALLIANCE

For vehicles manufactured on or after the first date and before the second date	Final rule's phase-in percentages	Alliance's recommended lead time periods and phase-in percentages
On or after September 1, 2013; before September 1, 2014.	25 percent	
On or after September 1, 2014; before September 1, 2015.	50 percent	
On or after September 1, 2015; before September 1, 2016.	75 percent	20 percent.
On or after September 1, 2016; before September 1, 2017.	100 percent (credits may be used)	40 percent.
On or after September 1, 2017	All vehicles, without use of credits	
On or after September 1, 2017; before September 1, 2018.		75 percent.
On or after September 1, 2018; before September 1, 2019.		100 percent (credits may be used).
On or after September 1, 2019		All vehicles, without use of credits.

The Alliance states that the final rule's lead time and phase-in schedule ''impose unreasonable and impractical burdens on vehicle manufacturers and have not been justified by the agency.'' Moreover, the Alliance believes that ''several substantive provisions added by the agency to the requirements proposed in the NPRM have created significant new compliance issues for manufacturers that warrant the full amount of time originally requested by the Alliance in its comments.'' In its comments on the NPRM, the Alliance asked for an additional year of lead time beyond what had been proposed in the NPRM and the allowance for the use of credits for one more year.

The petitioner states that while it might have been true that the lowered test speed (20 km/h from 24 km/h) will require fewer changes to existing designs if all other provisions of the NPRM had remained the same, ''the final rule contains several other substantive changes'' from the NPRM that the petitioner believes are likely to require significant changes to existing designs and thus more time to implement. These changes are: rotating the headform under certain circumstances; new specifications describing features of the impactor; not allowing movable advanced (laminated) glazing during the 16 km/h test; and the increase of the coverage area behind the

[4] The NPRM had proposed the following lead time and phase-in schedule: 20 percent of each manufacturer's vehicles manufactured during the first production year beginning 3 years after publication of the final rule; 40 percent in the fourth year; 75 percent in the fifth year; all vehicles (without use of credits) manufactured on or after the September 1st following 6 years after publication of a final rule.

[5] Special allowances from the phase-in were made for limited line manufacturers, small manufacturers, manufacturers of vehicles manufactured in two or more stages, and alterers. See FMVSS No. 226, S4.1.3. This schedule set forth in Table 5 does not reflect these special allowances.

rear row of seats (for 1- and 2-row vehicles) from 600 mm to 1,400 mm.

Agency Response

We are denying the Alliance's petition for reconsideration of this issue. We are not convinced that the Alliance's information justifies delaying the compliance dates of the final rule as the petitioner suggests. The compliance dates were adopted to achieve the safety benefits [6] of the final rule as quickly as practicable, while balancing the costs and burdens of the regulation.

The final rule provided over two and one-half years of lead time before the phase-in begins. In the Final Regulatory Impact Analysis, NHTSA estimated that 55 percent of the affected vehicle fleet in model year 2011 would have voluntarily installed ejection mitigation side curtain air bags. We believe that the changes that have to be made to these existing ejection mitigation air bag systems to meet FMVSS No. 226, described below, can be made well within the timeframe allotted by the final rule. Manufacturers will have had over two and one-half years to certify to the standard by September 1, 2013 and to begin building credits for early compliance.

The final rule reduced the impact speed of the high speed test considerably, from 24 km/h to 20 km/h. The final rule's high speed test reduced the impact energy by 31 percent $[((24)^2 - (20)^2)/(24)^2]$. As we showed in Table 22 of the final rule preamble, for the new impactor the average reduction in displacement between the 24 km/h and 20 km/h tests, across all tested vehicles and impact locations, was 38 mm. This represents an average displacement reduction of 29 percent.

Vehicles that did not pass the displacement limit in a high speed test of 24 km/h are more likely to pass when the impactor speed is 20 km/h. To illustrate this phenomenon, the final rule referred to a test of a MY 2007 Mazda CX 9 (76 FR at 3292) to show that fewer changes will be needed to existing designs to meet the final rule's requirements. In the final rule preamble, the agency referred to test data which showed that the MY 2007 Mazda CX 9, which could not pass the performance test of the final rule when tested at the 24 km/h impact speed, was able to pass when tested at 20 km/h without modification of the vehicle.

In objecting to use of this example, the Alliance first states that, ''because of the change to the targeting procedure in the Final Rule, NHTSA cannot legitimately state that the CX–9 fully complies'' since, the petitioner argues, NHTSA only evaluated the compliance of the first and second row side daylight openings, and did not test the third row side daylight opening. Second, the petitioner states that even if the statement were accurate, ''the fact that one vehicle model can comply with the requirements in a standard does not mean that the entire fleet can be brought into compliance in a relatively short time, or that the phase-in percentages can be increased.''

In response to the first point, after receiving the petition we tested the third row window with the results shown in Table 7. We found that this target location easily passed both the high speed impact test and the low speed impact test. The target was rotated 90 degrees (horizontal).

TABLE 7—MAZDA CX–9, 3RD ROW 90 DEG. TARGET ROTATION (HORIZONTAL)

Test	Maximum displacement (mm)
20 km/h-1.5 sec.	31.8
16 km/h-6 sec.	−7.1

As to the second point, the CX–9's meeting the requirements of FMVSS No. 226 affirmatively demonstrates that a vehicle that previously did not meet a 24 km/h high speed test was able to meet a 20 km/h test. We believe that it is feasible for many more vehicles in addition to the CX–9 to meet the standard with little or no modification. We never surmised that ''the entire fleet'' is capable of being brought into compliance in a ''short time.'' However, the final rule's over two and one-half years of lead time, phase-in percentages, and additional year of credits provide over six and one-half years to manufacturers to test their vehicles and undertake the necessary modifications to meet the standard.

Manufacturers have already begun informing NHTSA about vehicles in their fleet that they certify as meeting FMVSS No. 226. Every year, under its enforcement authority, the agency requests manufacturers to provide information about the standards to which each make/model is certified, as well as the anticipated production levels for each make/model. We have analyzed these data with regard to FMVSS No. 226. For 2012 model year vehicles, only about 1 percent was projected to meet FMVSS No. 226. For the 2013 model year (some of these vehicles are actually early 2014 models that will be available in 2013), the estimated percentage of the fleet certified to FMVSS No. 226 increased to 12 percent. This remarkable increase in fleet conformance to FMVSS No. 226 since the publication of the final rule, in just one model year, shows that manufacturers have been able to make a substantial increase in the percentage of certified vehicles with relatively swift changes to existing vehicle designs or possibly with no changes at all. This jump in projected vehicle certification indicates that, for some considerable segment of the vehicle population, the changes necessary to meet FMVSS No. 226 were able to be expeditiously accomplished. To us, this indicates that the changes needed to meet FMVSS No. 226 are manageable within the lead time and phase-in schedule of the final rule.

Moreover, this increase in early certification of vehicles allows manufacturers to accrue advanced credits toward future required certification levels at a rapid pace. Certainly, there will be make/models of vehicles which will require greater effort and time to achieve compliance. For those vehicles, the accelerated acquisition of credits will give manufacturers more flexibility to plan and achieve the necessary changes.

We recognize that various changes may have to be made to some existing ejection mitigation side curtain air bag systems to meet the standard. We provided a four-year phase-in period to account for this and to provide time for manufacturers to install ejection mitigation countermeasures in conformance with the standard. However, the adjustments to existing systems do not appear to be extensive enough to warrant putting off the beginning of the phase-in period to more than four and one-half years after publication of the final rule as the Alliance suggests, particularly when the high speed test was reduced in impact energy by 31 percent, a significant amount.

The Alliance argues that target rotation can offset any reduction in excursion due to the reduction in test speed from 24 km/h to 20 km/h. It points to displacements obtained in 20 km/h tests with the old impactor (at vertical target ''A5'' [7]), and estimates displacements that the petitioner thinks would have been obtained with the new impactor at that target (the petitioner added 18 mm to the value obtained with the old impactor). Next, the petitioner compares these estimated vertical A5

[6] 373 fatalities and 476 serious injuries saved annually when all covered vehicles meet FMVSS No. 226.

[7] The petitioner states that A5 is the target located between A1 and A4.

displacement values (associated with tests using the new impactor) with displacement values obtained at A2 and A3 horizontal impacts with the new impactor.

We have evaluated the petitioner's arguments, but cannot agree with them. First, the Alliance assumed that 18 mm should be added to all test results to compensate for the lower friction of the new impactor, which we believe is unfounded. Although displacements will likely increase in tests with the new impactor due to the lower friction of the new impactor compared to the old impactor, it is unreasonable to add 18 mm across the board to the values obtained in tests with the old impactor. The 18 mm value referenced in the final rule preamble is an average derived from all three test speeds on three different vehicles. It ranges from a 69 mm increase to a 13 mm decrease. In other words, the relationship between the old and new impactor results is vehicle- and test-dependent, and there is not a rationale basis for assuming there is an equivalence factor of 18 mm that can be applied universally.

Second, it does not appear appropriate to compare vertical A5 impacts to displacement values obtained from a horizontal A3 impact, which is near the header, and a horizontal A2 impact, which is near the bottom of the curtain. Ejection mitigation side curtain air bags have different challenges in limiting displacement of the headform at the top, middle, and bottom of the curtain. Differences in displacement values obtained in tests at the different locations cannot be deemed to be due to a single factor, i.e., target orientation.

The Alliance states that rotating the headform and targets by 90 degrees to a horizontal orientation ''will affect the targeting for a large number of vehicles.'' We agree that for some vehicles, coverage of some daylight openings will need to be increased to account for additional impact locations, or some daylight openings may be newly subject to the standard since they did not have a target with the headform oriented vertically, but do have a target with the headform horizontal. From a safety and SAFETEA–LU perspective this is a positive outcome, since it will serve to reduce the potential for partial or complete vehicle ejection. The petitioner does not provide data to support its assertion that the requirements are unreasonable or impracticable.

The petitioner provides no information substantiating the claim that its members are unduly burdened because various small cars, midsize cars and crossovers will have additional targets. We recognize that manufacturers will have to reassess some daylight openings to see if new targets can be identified that were not subject to ejection mitigation requirements when the impactor was oriented solely vertically. However, we believe that most vehicles have an ejection mitigation system to begin with, so orienting the impactor horizontally may just mean that the air bags need to be modified to provide additional daylight opening coverage and perhaps with modification to other aspects of the overall system. The major elements of an ejection mitigation side curtain air bag system, i.e., the design and installation of the curtain, inflator hardware, tethers, and rollover sensor, are already in place in most vehicles. For most vehicles, only adjustments will be needed to their systems. For those vehicles that do not have an ejection mitigation system, the lead time and phase-in schedule and use of credits will provide manufacturers flexibility in planning for their implementation.

Further, even if horizontal impacts and use of the new impactor will slightly increase headform excursion, the petitioner provides no information that show that existing curtains cannot be made to comply within the final rule's implementation schedule. For a curtain that displays increased displacements resulting from rotating the targets and/or using the new impactor, generally these displacements could be addressed by widening the curtain or slightly increasing inflation pressure. These changes are capable of being implemented within the schedule of the final rule, as opposed to more fundamental changes to the system that would have been needed to sufficiently manage the energy of the 24 km/h impact speed test.

We recognize that manufacturers will need time to test their vehicles to certify the ejection mitigation systems using the new impactor. The over two and one-half years of lead time provides sufficient time to test vehicles and modify them as needed. We see no basis for extending this lead time to over four and one-half years, as the petitioner suggests. The increasing number of vehicles certified with ejection mitigation side curtain air bags meeting FMVSS No. 226 is a testament to the availability and practicability of designs meeting the standard.

Further, we note that the FMVSS No. 226 test is a component test that does not involve full-scale vehicle crash testing. As such, countermeasure assessment and certification testing should be easier and faster to conduct compared to a standard involving a full-scale vehicle crash test. Modifications to existing ejection mitigation side curtain air bags can be assessed relatively quickly to see if the changes enable the vehicle to meet FMVSS No. 226. The notable increase in the percentage of the new vehicle fleet that are or will be certified to FMVSS No. 226 in one year—from 1 percent (model year 2012) to 12 percent (model year 2013)—also signifies that manufacturers are able to evaluate vehicle designs swiftly and efficiently.

On another point, the Alliance points to the agency's decision specifying that the low speed (16 km/h) impact test, conducted at 6 seconds after deployment of the ejection mitigation side curtain air bag, must be performed without the use of advanced glazing for movable windows. The Alliance states that ''by precluding the use of advanced glazing as a countermeasure for compliance purposes, NHTSA has again increased the compliance challenge for many vehicles.''

In response, we are not persuaded by this point. From a practical point of view there was no increased ''compliance challenge'' that warrants the requested delay in compliance dates. To date, very few manufacturers have used advanced (laminated) glazing in movable window applications as an ejection countermeasure. We do not believe this will change significantly in the future due to added cost and the ability to meet the test requirements with side curtain air bags alone. Furthermore, the decision to which the Alliance refers did not affect manufacturers that want to use advanced glazing in movable windows to supplement an ejection mitigation side curtain air bag system in the high speed (20 km/h) impact test. For those manufacturers using advanced glazing in movable windows, the high speed (20 km/h) impact test will still be performed with the glazing (pre-broken) in place. Further, the decision does not affect manufacturers that want to use advanced glazing in fixed widow applications. The petitioner's argument that the change influences the ability to meet the lead time and phase-in requirements of the final rule has not been substantiated.

The last change made by the final rule that the Alliance cites is the increase of the coverage area behind the last row of seats (for one and two row vehicles) from 600 mm behind the seating reference point (SgRP) (NPRM) to 1,400 mm behind the SgRP (final rule). The Alliance objects to the increase and petitions for it to be changed back to 600 mm. (We respond to this portion of the

petition in a later section of this preamble.) The petitioner states that extending the coverage area to 1,400 mm behind the SgRP means that manufacturers will have to redesign the entire side air bag system, and assess effects relating to matters such as air bag volume, air bag deployment timing, and protection under FMVSS No. 214 and No. 201. The Alliance states that, if NHTSA declines to reconsider the change, ''[The agency] needs to recognize the added impact that the change has on the ability of manufacturers to satisfy the final rule's phase-in schedule.''

We are not convinced that extending the daylight opening coverage in the area behind the last row (for one and two row vehicles) from 600 mm to 1,400 mm will require the inordinate delay in the compliance dates. As noted in the final rule preamble (76 FR at 3263), vehicles are already being produced that have side air bag curtains covering rows 1, 2 and 3 row windows. The designs typically use a single curtain tethered at the A- and D-pillars. The petitioner provided no data as to the number of vehicles that would be affected by the change, or affected to the extent that necessitates a major redesign, or whose production problems cannot be relieved by way of credits. Further, given that there already are designs that provide three rows of coverage, manufacturers are familiar with and have availed themselves of air bag systems that extend coverage further into the cargo area. The petitioner has not substantiated its claim that there are technical challenges in extending coverage to the cargo area that cannot be met in the schedule provided by the final rule.

For the reasons provided above, the Alliance's petition is denied.

Reconsideration Request—Mercedes-Benz Petition

In its petition for reconsideration, Mercedes-Benz states that it supports the phase-in suggested by the Alliance and additionally petitions with regard to a matter related to Mercedes-Benz's Sprinter model line. Mercedes-Benz states that the final rule does not adequately address the practicability issues associated with large, heavy vehicles (GVWR greater than 3,856 kg (8,500 lb) that incorporate expansive daylight openings. The petitioner states that the vehicles ''are typically exempt from the FMVSS–214 side impact barrier requirements and therefore pre-FMVSS–226 plans did not necessarily include side impact countermeasures (airbags [sic] and sensing) for rear seating rows. Therefore, the application of these new requirements imposes a level of burden which was not addressed in the NPRM or in the subsequent Final Rule.'' Mercedes-Benz states that the Sprinter platform is scheduled for ''renewal'' during the timeframe that, under the final rule, all vehicles must comply with FMVSS No. 226 without the use of credits. The petitioner states: ''Given the scope of design change required to bring this platform into full compliance, the most practical phase-in is one which allows development resources be focused entirely on the new platform rather than extended to the parallel development of two platforms. The Alliance proposal provides this flexibility by allowing the use of credits prior to September 1, 2019.'' Alternatively, the petitioner asks that the phase-in allow the use of accumulated credits for vehicles with a GVWR of 3,856 kg (8,500 lb) or more until September 1, 2018.

Mercedes-Benz states that the varied derivatives of the Sprinter platform will require significant redesign to meet the requirements of FMVSS No. 226, including air bag inflators, air bag cushions, and roll detection sensing. To illustrate, the petitioner refers to a ''high-roof variant of the Sprinter platform,'' which incorporates a large sliding door. Mercedes-Benz states that an inflatable restraint countermeasure would have to extend from the roof to the beltline (a vertical dimension of approximately 1,100 mm (43 in)), and also satisfy deployment timing and out-of-position performance requirements. ''With regard to our product cycle concern, it is suggested that a development effort of this scope should be focused entirely upon the next generation platform.''

Agency Response

We deny Mercedes-Benz's request for an extension of the phase-in for an additional year.[8] We understand that this denial may cause the petitioner to modify its plans related to the Sprinter passenger van variant. In the final rule preamble, we acknowledged that the final rule phase-in schedule ''may result in some manufacturers needing to reassess and modify their plans.'' 76 FR at 3292. However, we determined that ''the two year lead time and the four-year phase-in correctly balances the manufacturers' needs for flexibility and the needs of the agency to limit the length of time for the phase-in to a reasonable period and achieve the safety benefits of the final rule as quickly as practicable.'' *Id.*

Mercedes-Benz states that heavy vehicles (GVWR greater than 3,856 kg (8,500 lb)) ''are typically exempt from the FMVSS–214 side impact barrier requirements and therefore pre-FMVSS–226 plans did not necessarily include side impact countermeasures (airbags [sic] and sensing) for rear seating rows. Therefore, the application of these new requirements imposes a level of burden which was not addressed in the NPRM or in the subsequent Final Rule.''

The agency believes that manufacturers have had sufficient time to plan for the implementation of ejection mitigation side curtain air bags in the subject vehicles. Although the subject vehicles (GVWR greater than 3,856 kg (8,500 lb)) are excluded from FMVSS No. 214's moving deformable barrier requirements, Standard No. 214's pole test requirements apply to such vehicles manufactured on or after September 1, 2015. (We are currently in the middle of the phase-in of the pole test requirements. The phase-in for most light vehicles began September 1, 2012 and ends September 1, 2014.) To meet the pole test, the vehicles will have side air bags and sensors.

As to what type of side air bag system, when NHTSA issued the FMVSS No. 214 pole test final rule in 2007, we noted that the ejection mitigation rulemaking was imminent (72 FR 51908, 51932–51933; September 11, 2007). We believed that manufacturers would plan for the ejection mitigation rulemaking requirements by considering side curtain air bags covering the front and rear rows. NHTSA stated in that 2007 final rule:

> We believe that manufacturers will increasingly install air curtains in their vehicles because air curtains can potentially be used as a countermeasure in preventing ejection in rollovers. (''NHTSA Vehicle Safety Rulemaking Priorities and Supporting Research: 2003–2006,'' July 2003, Docket 15505.) NHTSA has announced that it is developing a proposal for an ejection mitigation containment requirement.[9] NHTSA believes that side curtains installed pursuant to FMVSS No. 214's pole test could readily be developed to satisfy the desired properties of a countermeasure. (NHTSA report ''Initiatives to Address the Mitigation of Rollovers,'' *supra*.) We believe that manufacturers will install curtains in increasing numbers of vehicles in response to this [FMVSS No. 214] final rule, the voluntary commitment, and in anticipation

[8] We have explained above our reasons for denying the Alliance's petition for reconsideration of this issue.

[9] Additionally, Sec. 10301 of SAFETEA–LU requires the Secretary to issue by October 1, 2009 an ejection mitigation final rule reducing complete and partial ejections of occupants from outboard seating positions (49 U.S.C. 30128(c)(1)). [Footnote in text.]

of NHTSA's ejection mitigation rulemaking. The curtains will provide head protection to front and rear seat occupants in side impacts. 72 FR at 51933.

As shown above, the vehicles to which Mercedes-Benz refers will be required to have side air bag technology by 2015, and manufacturers are likely already designing for implementation of the technology. The petitioner has had sufficient time to implement design changes to this air bag technology to meet the ejection mitigation requirements of the January 19, 2011 final rule.

As far as challenges with respect to sensor requirements, we note that the supplemental information provided by the petitioner indicates that relief was only needed for the passenger van version of the Sprinter. We understand that Mercedes-Benz would be able to certify compliance of the cargo and chassis cab versions. This indicates that a sensor and algorithm to deploy the first row window curtain will be developed, which could also be used for the passenger van. We note also that the agency has no specific performance requirements for the deployment sensor, so manufacturers have great latitude in this area.

Moreover, it appears that there are ways that the petitioner's duplication of effort developing two platforms can be reduced. For example, the rear windows adjacent to the second and higher rows appear to be fixed. As such, advanced glazing could be used to meet the requirements of both the high and low speed tests. With this countermeasure in place it may reduce or eliminate the need for side curtain air bags to cover these locations.

Another option would be for Mercedes-Benz to introduce the new platform ahead of schedule. As Mercedes-Benz noted, the Sprinter Passenger Van (the variant of the Sprinter that Mercedes-Benz claims it needs more time to make compliant) only makes up 10 percent of the Sprinter production, which is a relatively small number of vehicles. Mercedes-Benz could avoid having to modify the current platform by advancing the production of the new platform of the Sprinter Passenger Van.

We realize that Mercedes-Benz would like to avoid expending resources on the current Sprinter platform and would rather devote efforts solely to the new platform. Unfortunately, there are costs associated with any implementation schedule that is shorter than that of a manufacturer. We seek to develop a lead time and phase-in schedule that balances manufacturers' desires and the safety benefits to the extent possible. Because of the relief provided in the final rule by allowing an additional year for use of credits, Mercedes-Benz will be able to produce vehicles until September 1, 2017, just as it would have under the NPRM. We believe we have achieved the sought-after balance with the final rule and are not convinced that the petitioner's information and efforts warrant delaying that schedule.

Reconsideration Request—Porsche Petition

Porsche petitioned for reconsideration of the implementation schedule, requesting additional time to achieve compliance with the standard. The petitioner asks for more time ''in consideration of the small number of Porsche vehicles that will not be redesigned during the timeframe established in the final rule.'' Porsche requests that full compliance (without the use of credits) does not become mandatory until September 1, 2019. The petitioner states that for Porsche, the amendment would impact no more than 4,000 to 5,000 vehicles annually during the September 1, 2017 to August 31, 2019 timeframe. ''Compared to the twelve million-plus light duty vehicles sold annually in the U.S., this is a relatively small number of vehicles and in fact it constitutes less than a single day of sales by a large manufacturer. [Footnote omitted.]'' The petitioner states that—

> the request will ultimately have no net negative impact on safety because utilizing the amendment sought hinges on the ability to introduce fully compliant vehicles to market early and generate early compliance credits that can be used to offset the small number of vehicles affected. Our request is that NHTSA simply provide us an opportunity to use early compliance credits for a slightly longer period of time than what would be permitted by the rule issued January 19, 2011. . .. [T]he new ejection mitigation requirements will require changes to the body-in-white which, in the case of our sports cars, means that compliance cannot be achieved until the vehicle undergoes a major redesign. Absent this major redesign, we will be required to bring production for affected vehicles to a premature halt.

Porsche asks, if we do not agree to adopt the schedule suggested by the Alliance, that NHTSA consider adopting a provision ''to provide manufacturers with additional compliance flexibility to address a small number of vehicles that may be uniquely challenged.'' The provision would be applicable to only a limited number of vehicles for a two-year timeframe, and would only be available to manufacturers that introduced fully compliant technology early and in advance of the compliance deadlines contained in the final rule.

Agency Response

We deny Porsche's request for an extension of the lead time and phase-in schedule.

We understand that manufacturers, such as Porsche, might have unique problems depending on factors such as organizational resources, product mix, and product life cycle. The final rule provided relief to those manufacturers by allowing an additional year for use of credits. We believe that the two and one half-years lead time and the four-year phase-in correctly balances the various needs of manufacturers, and the needs of the agency to limit the length of time for the phase-in to a reasonable period and achieve the safety benefits of the final rule as quickly as practicable. Because of the relief provided in the final rule—the additional year for use of credits—Porsche will be able to produce vehicles until September 1, 2017, just as would have been the case under the NPRM.

We do not necessarily agree with Porsche that its requested amendment ''will ultimately have no net negative impact on safety.'' Porsche argues that there will be no negative safety impact because early compliance credits ''can be used to offset the small number of vehicles affected.''

NHTSA has determined that two and one half-years of lead time and a definite phase-in schedule would provide the needed time for manufacturers to install ejection mitigation countermeasures to address the dire rollover safety problem as quickly as reasonably possible. Under the final rule, a vehicle manufactured or after September 1, 2017 will have a rollover ejection countermeasure. All persons purchasing a vehicle manufactured on or after September 1, 2017 will be assured that the vehicle offers the safety provided by FMVSS No. 226.

Under the petitioner's scenario, no such assurance can be given. There will be purchasers, many of them, who will buy a new vehicle which will not provide ejection mitigation protection while an identical vehicle—manufactured on the same day—will, even when it is practicable for both vehicles to provide the protection. Such an outcome introduces an element of ''buyer beware'' in the marketplace, which we are not prepared at this time to accept when it comes to meeting the FMVSSs.

This situation can be distinguished from a phase-in period when credits accrue. In that situation, the agency has determined that the date has not yet been attained on which compliance

with a standard is practicable across the fleet. The use of credits provides an incentive to manufacturers to bring more compliant vehicles to market early than that achievable across the fleet.

Porsche recommends an approach that will give it relief from problems resulting from a business model it uses relating to the product life cycle of its vehicles. We do not find its arguments sufficiently compelling to extend the certification date two years. Thus, the petition is denied. We note that Porsche's requested amendment departs a bit from the scope of the rulemaking. The request has policy implications that would be more suitable for deliberation in a separate rulemaking, rather than in this response to petitions for reconsideration.

b. Applicability

1. Vehicles With Partitions With Doors

S5.2.1.2 of FMVSS No. 226 has procedures for locating target locations in a daylight opening. The procedures define the testable area of the vehicle. Generally speaking, the rearmost limit of the testable area is determined by identifying the transverse vehicle plane located at the following distances behind the seating reference point (SgRP):

—For a vehicle with fewer than 3 rows: 1,400 mm behind the rearmost SgRP;
—For a vehicle with 3 or more rows: 600 mm behind the 3rd row SgRP.

The final rule made an allowance for vehicles with partitions or bulkheads (we will use ''partition'' to refer to both terms) that separate areas of the vehicle with designated seating positions (namely the driver's area) from areas of the vehicle without designated seating positions (e.g., a rear cargo area). Vehicles with partitions—i.e., the vehicles themselves—generally were not excluded from the standard [10]; rather, only the side daylight openings rearward of the partition were excluded from testing, provided that there must not be seating positions rearward of the partition. For such vehicles with a partition separating a seating area from a non-seating area, S5.2.1.2(c) of the standard has a provision regarding how impact target locations are determined. Under S5.2.1.2(c), if a vehicle has a fixed transverse partition through which there is no occupant access and behind which there are no designated seating positions, the rearmost limit of the offset line is located 25 mm in front of the partition rather than 1,400 mm behind the rearmost seating reference point, assuming the former is positioned more forward than the latter. We made this accommodation after deciding that, if there is a permanent partition that separates areas of the vehicle with designated seating positions from areas that do not have designated seating positions, the likelihood of an occupant being ejected from an opening in an area without a designated seating position is low. However, the final rule specified that the partition must not provide access for an occupant to pass through it; i.e., a partition must not have a door separating the occupant space from non-occupant space. 76 FR at 3290.

Reconsideration Request

NTEA was supportive of the testing requirements in S5.2.1.2(c), but states that ''NHTSA's limitation of that accommodation—prohibiting a door in the partition—makes it of little value in the vocational truck and van marketplace of today and the future.'' The petitioner asks NHTSA to reconsider this decision and provide the exemption even when there is a door in the partition. NTEA claims that many partitions installed on vocational vehicles have doors and that ''[i]n the future we expect that partitions with doors will be the norm. Those doors are and would be latched in compliance with FMVSS [No.] 206.'' The petitioner suggests that the agency has to provide data demonstrating that occupants are passing through the doors in the partitions and are being ejected through a side window ''with some significant frequency.'' The petitioner also disputes certain statements in the final rule preamble concerning the suitability of Incomplete Vehicle Documents (IVDs) and the pass-through certification process for final-stage manufacturers and alterers.

Agency Response

Rollover crashes are a significant and a particularly deadly safety problem. As a crash type, rollovers are second only to frontal crashes as a source of fatalities in light vehicles. Data from 10 years of Fatal Analysis Reporting System (FARS) files (2000–2009) indicate that frontal crash fatalities have averaged about 11,600 per year, while rollover fatalities have averaged 10,037 per year. Ejection is a major cause of death and injury in rollover crashes. According to 2000–2009 FARS data, on average 47 percent of the occupants killed in rollovers were completely ejected from their vehicle. A double-pair comparison from 2000–2009 FARS data show that avoiding complete ejection is associated with a 64 percent decrease in the risk of death. FARS data does not subtract out multi-stage work trucks, and the FARS data above is inclusive of all vehicles.

The January 19, 2011 final rule will substantially reduce the risk of ejection in rollovers. The final rule enhances the side curtain air bag systems that are now being installed, ensuring that the curtain systems are made larger to cover more of the window opening, improved to deploy in rollovers in addition to side impacts, made more robust to remain inflated longer and sufficiently strong not only to cushion an impact but to keep the occupant from being fully or partially ejected through the window as well. We estimate that the ejection mitigation rule will save 373 lives and prevent 476 serious injuries per year. Some of these lives saved and injuries prevented will come in vehicles with a GVWR between 2,722 kg and 4,536 kg (6,001 lb and 10,000 lb).

In addition, the January 2011 final rule responds to § 10301 of SAFETEA–LU, which required the Secretary of Transportation to issue an ejection mitigation final rule reducing complete and partial ejections of occupants from outboard seating positions. Section 10301, paragraph (a), directed the Secretary to initiate rulemaking proceedings for the purpose of establishing rules or standards that will reduce vehicle rollover crashes and mitigate deaths and injuries associated with such crashes for motor vehicles with a GVWR of not more than 4,536 kg (10,000 lb). Paragraph (c) directed the Secretary to initiate a rulemaking proceeding to establish performance standards to reduce complete and partial ejections of vehicle occupants from outboard seating positions and to issue a final rule by a specified date. (See 49 U.S.C. § 30128(a) and § 30128(c)(1).

In the January 2011 final rule, we excluded daylight openings rearward of the partition from the standard's testing requirements, if the partition does not have a door. We emphasize that we did not exclude partitioned vehicles themselves from the standard, we only excluded the daylight openings rearward of the partition (and only if there are no seating positions rearward of the partition) from certain testing requirements. This means that a partitioned work truck would need to meet the ejection mitigation side curtain air bag requirements of FMVSS No. 226 for the occupant cab of the vehicle.

We did not exclude ''trucks with partitions'' outright from the standard in the January 2011 final rule. Under our

[10] Certain vehicles with partitions were excluded from the standard. The vehicles were: Law enforcement vehicles, correctional institution vehicles, taxis and limousines, provided that the vehicle was produced by more than one manufacturer or by an alterer (S2). We are not referring to that exclusion in this discussion.

regulations implementing the Vehicle Safety Act, the work vehicles to which NTEA refers are ''trucks'' as defined in 49 CFR 571.3.[11] It is appropriate to apply FMVSS No. 226 to trucks notwithstanding the presence of a partition, because a partition would not lessen the risk of the vehicles' rollover involvement or the risk of ejection to occupants forward of the partition. Work trucks must be driven and that driver deserves the same protection as if he or she were driving for personal use, for example, a similar pick-up truck or van. Since partitioned vehicles are not immune from rollover crashes and their occupants are not invulnerable to rollover ejection, we did not exclude ''trucks with partitions'' outright from the standard.

However, NTEA did not seek a complete exclusion for work trucks from the requirements of FMVSS No. 226. Instead, its petition focused specifically on S5.2.12(c). In response to NTEA's petition for reconsideration, we have decided to grant the request to remove the qualification in S5.2.1.2(c) that there must not be a door in the partition. In the final rule, we were concerned that a door in a partition may be open during a rollover and may become an aperture through which an occupant could be thrown. However, the petitioner states that the doors in the partitions are designed to have latches. Thus, on reconsideration, we conclude that there is a fair likelihood that the partition door will be closed and latched, and that the latched door reduces the likelihood of ejection through the partition door. Granting the request gives final-stage and other manufacturers additional flexibility in meeting the requirements of FMVSS No. 226, without unreasonably reducing the safety of such vehicles.

While we have granted NTEA's request for reconsideration, we do not agree with NTEA's generalized assessment regarding the availability of IVDs and pass-through certification.[12] NTEA's petition for reconsideration states that final-stage manufacturers and alterers will not be able to use IVDs to pass through certification to the ejection mitigation standard. NTEA quotes from an IVD from an unidentified incomplete vehicle manufacturer regarding FMVSS No. 201, ''Occupant protection in interior impact.'' NTEA states that, based on this sample IVD, ''even a partition that is designed so as not to interfere with deployment of the OEM designed airbag [sic] system would be impermissible for pass-through compliance.''

By way of background, NTEA's petition for reconsideration of the FMVSS No. 226 final rule was filed prior to a 2013 decision from the U.S. Court of Appeals for the Sixth Circuit denying NTEA's petition for review of a NHTSA final rule promulgating FMVSS No. 216a, ''Roof crush resistance, Upgraded standard.'' *National Truck Equipment Association* v. *National Highway Traffic Safety Administration,* 711 F.3d 662. Similar to this rule, NHTSA promulgated FMVSS No. 216a at the direction of Congress through SAFETEA–LU. The agency issued FMVSS No. 216a to include multi-stage vehicles with a GVWR up to 4,536 kg (10,000 lb) built on either a chassis cab or an incomplete vehicle with a full exterior van body. NTEA wanted to have final-stage manufacturers excluded from FMVSS No. 216a and filed a petition for review with the Sixth Circuit challenging NHTSA's adoption of FMVSS No. 216a.

The Sixth Circuit denied NTEA's petition, finding, among other things, that NHTSA conducted the rulemaking proceedings promulgating FMVSS No. 216a in a sufficiently thorough manner, and that pass-through certification, which, the Court acknowledged, was envisioned by Congress, may be relied on by final-stage manufacturers and alterers to demonstrate compliance. The Court found that the 216a standard is practicable within the meaning of the Vehicle Safety Act—

> because it provides final-stage manufacturers and alterers with reasonable means of demonstrating compliance. To conclude otherwise would disregard Congress's instruction to put a thumb on the scale for safety in considering the substantive limitations of the Act. *See Public Citizen, Inc.,* v. *Mineta,* 30 F.3d 39, 58 (2d Cir. 2003). After all, Congress intended for manufacturers to adjust to the regulatory demands of the industry rather than the other way around. *Cf. Chrysler,* 472 F.2d at 671 (describing the Safety Act as technology-forcing legislation).

711 F.3d at 673–674.

We have analyzed NTEA's present petition for reconsideration of FMVSS No. 226 and do not agree with NTEA's generalized assertions regarding the availability of IVDs and pass-through certification. Vehicles subject to the standard can be certified using reasonable means such as IVDs and pass-through certification, among others, consistent with the intent of SAFETEA–LU to reduce complete and partial ejections from vehicles with a GVWR less than 4,536 kg (10,000 lb).[13] Based on the agency's understanding of the work truck industry, and the tailoring in this rule and petition, the agency believes that final-stage manufacturers will be able to meet this new regulation.

First, FMVSS No. 226 will not apply to over 90 percent of the vehicles produced by NTEA's members. NTEA's petition for reconsideration of FMVSS No. 226 states that the final-stage manufacturer is typically known as a ''distributor'' for NTEA membership purposes, as these companies are distributors for the body manufacturer. NTEA explains that as part of the companies' distributor function, the companies install the body or equipment on a chassis. NTEA states: ''Typically, the customer purchases a chassis through an authorized OEM dealership and decides upon the body and/or equipment that will be needed to fulfill the customer's needs.'' The final stage manufacturer/body distributor ''takes the chassis and completes the vehicle by installing the necessary body and equipment, sending the completed truck back to the dealership for customer delivery.'' Many of the work vehicles[14] NTEA describes in its petition (''dump trucks, utility company vehicles, aerial trucks, fire trucks, ambulances, beverage delivery trucks, walk-in vans, digger derricks and snow removal vehicles'') are built on chassis-cabs. A chassis-cab is defined as ''an incomplete vehicle, with a completed occupant compartment, that requires only the addition of cargo-carrying, work-performing, or load-bearing

[11] ''Truck'' is defined as a motor vehicle with motive power, except a trailer, designed primarily for the transportation of property or special purpose equipment. Some work vehicles could be classified as ''multipurpose passenger vehicles'' (MPVs) under 49 CFR 571.3. This discussion refers to trucks but it is relevant to MPVs as well.

[12] Over the years NTEA has repeatedly objected to the IVD process and pass-through certification in response to our rulemaking actions, and has done so again in its present petition, even though the objections do not seem related to its requested amendment regarding the partition door.

[13] The final rule excludes vehicles with a ''modified roof'' from the standard. ''Modified roof'' means ''the replacement roof on a motor vehicle whose original roof has been removed, in part or in total.'' See S3, FMVSS No. 226. While not raised in the petitions, in reviewing this matter we believe the term should include a roof that has to be built over the driver's compartment in vehicles that did not have an original roof over the driver's compartment. Such vehicles are similar to vehicles whose original roof has been removed in part or in total since pass-through certification will not be available to final-stage manufacturers using incomplete vehicles that did not have an original roof over the driver's compartment.

[14] Some of the vehicles listed are walk-in vans, which are excluded from FMVSS No. 226 (see S2 of the standard). Walk-in van is defined as ''a special cargo/mail delivery vehicle that only has a driver designated seating position. The vehicle has a sliding (or folding) side door and a roof clearance that enables a person of medium stature to enter the passenger compartment area in an upright position.'' (Definition in S3 of FMVSS No. 226.)

components to perform its intended functions'' (49 CFR 567.3). This means that chassis-cabs are equivalent to similar pick-up trucks, minus the truck bed. Based on previous submissions from NTEA, NHTSA understands that the number of ''chassis and non-chassis cabs'' manufactured in the U.S. for calendar years 2007, 2008 and 2009 with a GVWR greater between 2,721 kg and 4,536 kg (6,000 lb and 10,000 lb) was only 8 percent of the vehicles produced by NTEA members.[15] Moreover, NTEA fails to demonstrate that there will be an actual issue with its members manufacturing those vehicles. In fact, of the 8 percent of vehicles, the vast majority (67 percent) of the vehicles produced under 4,536 kg (10,000 lb) GVWR are built on chassis-cabs. These chassis-cabs come with a completed occupant structure from large vehicle manufacturers such as Ford, GM, or Chrysler, and the final-stage manufacturer will be provided an IVD.

Second, there is ample time for incomplete vehicle manufacturers to produce chassis-cabs with ejection mitigation side curtain air bag systems. Under the January 2011 final rule, FMVSS No. 226 does not apply to vehicles produced by final-stage manufacturers and alterers until September 1, 2018, which is a year longer than the time given to manufacturers of single-stage vehicles to achieve full compliance with the standard.[16] The long 7½-year time period provided to final-stage manufacturers and alterers provides the multistage manufacturing industry abundant opportunity to develop pass-through certification strategies, such as chassis-cabs that provide ejection mitigation side curtain air bag systems for the driver and front passenger side windows in the cab. Final-stage manufacturers can mount the work-performing equipment behind the completed cab without affecting the ejection mitigation side curtain air bags. There is no occupant space, no daylight opening through which an occupant can be ejected behind the chassis-cab of these work-performing vehicles—basically, there is nothing rear of the chassis-cab subject to FMVSS No. 226. The final-stage manufacturer only has to complete the vehicle by attaching the work-performing equipment to the chassis behind the completed cab, follow the IVD, and pass through the certification to FMVSS No. 226.

Third, vehicle manufacturers using non-chassis-cabs also have certification options available. NTEA reported that non-chassis-cabs comprised 33 percent of the vehicles rated in the GVWR range of 2,722 kg to 4,536 kg (6,001 lb to 10,000 lb) in 2007, 2008 and 2009 (24,452 out of 73,029). *Id.* Similar to chassis-cabs, other incomplete vehicles that have a completed occupant structure for the driver's compartment will come equipped with ejection mitigation side curtain air bags. Non-chassis-cabs with a driver's compartment can readily be developed in that 7½-year period to achieve pass-through certification to FMVSS No. 226. For example, an incomplete vehicle configuration is wholly viable for van-based work vehicles or vehicles using cutaway chassis, with ejection mitigation side curtain air bags provided for the daylight openings adjacent to the driver's and right front passenger's seats. Partitions can be used to exclude areas of these vehicles from the standard's requirements.[17] Alternatively, a final-stage manufacturer that also produces the truck body (''distributor'') could design the body to meet FMVSS No. 226 without use of partitions. We have designed this rule to apply where people sit with side windows. The body could be designed such that it does not have any side daylight openings (side windows) rearward of the driver's position, or if it has side daylight openings, none close enough to an occupant position such that the standard's testing requirements apply or none large enough to pass the FMVSS No. 226 headform. With such designs, there are no side daylight openings subject to FMVSS No. 226's testing requirements rearward of the 1st (driver's) row. Alternatively, if the distributor/final-stage manufacturer would like to have side daylight openings rearward of the 1st row that would be subject to the standard, the distributor could design the body to have openings incorporating fixed advanced glazing that prevents passage of the FMVSS No. 226 headform. Such openings would not require side curtain air bag coverage. In short, final-stage manufacturers using a van-based or cutaway platform for work vehicles will be able to use the pass-through certification process and will have many options available to them when they use incomplete vehicles that have the FMVSS No. 226 system for the driver's and right front passenger's side windows.

Fourth, the standard itself only will apply in certain situations, and NTEA fails to provide details on how its members' later-stage manufacturing will be problematic. NHTSA has already applied FMVSS No. 226 only to side daylight openings within a certain distance of occupants' seats, has excluded from the standard's requirements side openings (windows) in a non-occupant area rear of the driver if there is a partition, has excluded side openings even if the partition has a door, has excluded walk-in vans and modified roof vehicles, and has designed the standard so that nothing in the work-performing area rear of a chassis-cab is subject to the standard. Given the design of this standard, NHTSA fails to see evidence of an actual problem.

NTEA believes that final-stage manufacturers will not be able to pass through certification to FMVSS No. 226 if they install a partition because an IVD to which NTEA refers limits the modifications a final-stage manufacturer may make to pass through certification to FMVSS No. 201.[18] We do not agree with the petitioner's assertions. IVDs pertaining to FMVSS No. 201 have been

[15] See Declaration of Stephen Latin-Kasper, Docket No. NHTSA–2009–0093–0022.

[16] The final rule also exempts final-stage manufacturers and alterers from having to phase in their compliance with the standard, whereas single-stage manufacturers are subject to a phase-in.

[17] NTEA states in its petition that partitions with breakaway features or side clearance (accommodating ejection mitigation side curtain air bags) conflict with a Federal Motor Carrier Safety Administration (FMCSA) requirement (49 CFR 393.114(d)) for ''penetration resistance'' that applies to vehicles over 4,536 kg (10,000 lb) GVWR. We do not agree that there is a conflict. We note first that the petitioner's argument does not seem related to its petition for reconsideration regarding the partition door. Second, the FMCSA requirement does not apply to work vehicles with a GVWR less than or equal to 4,536 kg (10,000 lb). Vehicles with a GVWR less than or equal to 4,536 kg (10,000 lb) are required to provide ejection mitigation protection under FMVSS No. 226 and SAFETEA–LU. Third, contrary to the NTEA assertion, the FMCSA requirement (49 CFR 393.114(d)) does not require vehicles to have partitions with penetration resistance, even for vehicles with a GVWR over 4,536 kg (10,000 lb). Instead, it specifies requirements that front end structures must meet if they are to be used as part of a cargo securement system. Last, final-stage manufacturers could use an incomplete vehicle configuration that has ejection mitigation side curtain air bags for the daylight openings adjacent to the front seats and complete the vehicle such that it does not have side daylight openings rearward of the front seats. This design can accommodate installation of a partition that is flush against the sides of the vehicle. As the Sixth Circuit observed in *NTEA* v. *NHTSA, supra,* the final-stage manufacturer can communicate to dealers of incomplete vehicles and to customers that they will only work on incomplete vehicles that have accommodating IVDs.

[18] The IVD states that the incomplete vehicle will conform to [FMVSS] No. 201, Section 6 (''Requirements for Upper Interior Components''), if in the process of completing the vehicle ''none of the following components, as provided by the incomplete vehicle manufacturer, are removed, relocated, altered, or modified either physically or chemically'': A, B, rear, or other pillar and trim, assist handles, seat belt ''D''-rings/adjusters and ''D''-ring covers; front or rear header and trim, side rails and trim; upper roof and trim.

workable in practice, as FMVSS No. 201 has applied to vehicles produced by final-stage manufacturers and alterers since September 1, 2006. NTEA does not provide one single instance of a final-stage manufacturer or alterer that has been unable to produce vehicles meeting the 201 standard. Further, the quoted IVD's limits on the modifications that may be made with regard to FMVSS No. 201 are not difficult for a final-stage manufacturer to follow to pass through the certification to FMVSS No. 201.[19] If this is an issue, NTEA should be able to provide examples. Final-stage manufacturers and alterers have to avoid modifying the components within the head protection zone regulated by FMVSS No. 201 or adding items to components in the zone.

NTEA believes that final-stage manufacturers will be restricted from installing partitions because a note in the quoted IVD states that, because the upper interior performance for cutaway products is affected by the rigidity of the back panel attachment, existing upper interior trim components may require recertification after attachment of a back panel. NTEA believes that, since incomplete vehicle manufacturers indicate that the addition of the body to a completed cab chassis might cause the cab to stiffen, ''even a partition that is designed so as not to interfere with deployment of the OEM [original equipment manufacturer] designed airbag [sic] system would be impermissible for pass-through compliance.''

This reasoning is not logical or persuasive. As the Court stated in *National Truck Equipment Association* v. *National Highway Traffic Safety Administration, supra,* ''NTEA's fears regarding too-restrictive IVDs appear to us unfounded.'' 711 F.3d at 672. The statement does not seem unduly restrictive, but simply cautionary that existing upper interior trim components ''may'' be affected by the completion of the vehicle. The statement in NTEA's quoted note appears to pertain to one of the paramount and central steps in manufacturing a vehicle in stages: Installing the vehicle body to the incomplete vehicle. This combination of the vehicle body to the vehicle chassis is a manufacturing process. It is reasonable for the IVD to caution that the upper interior performance may be affected by the rigidity of the back panel attachment. In contrast, installing a partition is much simpler than joining the vehicle body to the chassis. Installing a partition on the affected vehicles typically involves simply bolting or welding several fasteners in place at certain intervals. Since installing a partition is vastly easier and more straightforward than attaching the vehicle body to the chassis cab, the quoted IVD statements are not relevant to partitions, and do not show that partitions will be disallowed by the IVDs because of FMVSS No. 226.

Fifth, in line with what the agency has observed with other rules, we expect manufacturers to update body builder manuals to provide guidance to final-stage manufacturers on completing a vehicle to pass through certification to FMVSS No. 226. We believe the guidance will include instructions on installing partitions. We also continue to expect a dynamic marketplace with multiple manufacturers providing various vehicle configurations. As the Sixth Circuit observed in *NTEA* v. *NHTSA, supra,* final-stage manufacturers are free to communicate that they will only work on incomplete vehicles from first-stage manufacturers that have accommodating IVDs. 711 F.3d at 672.

NTEA's petition for reconsideration briefly mentioned alterers, but did not discuss these entities at length.[20] Alterers, by definition, perform work on an already certified vehicle. This means that the vehicle, prior to the alterer's work, is compliant with FMVSS No. 226. We believe there are options available to alterers to ''pass through'' the certification to FMVSS No. 226, depending on the modifications they make to the vehicle. Since the alterer would be modifying a vehicle already certified to FMVSS No. 226, the alterer would only have to take care not to alter the compliance of the vehicle with the FMVSS. There are partitions already available in the marketplace that are designed to be compatible with side curtain air bags.[21] An alterer may install such a partition without affecting the vehicles' conformance with FMVSS No. 226.

NTEA's petition criticizing IVDs and FMVSS No. 226 is not based on practical experience. Final-stage manufacturers have been using the pass-through method to certify compliance with various safety standards for decades; the method is workable and recognized by Congress.[22] ''After all, Congress intended for manufacturers to adjust to the regulatory demands of the industry rather than the other way around'' (*NTEA* v. *NHTSA,* 711 F.3d at 673–674). Furthermore, as the above discussion shows, all indications are that multi-stage manufacturers and alterers will be able to use pass-through certification to develop, produce, and offer for sale vehicles that provide the substantial ejection mitigation protections of FMVSS No. 226 to workforce personnel. The manufacture of these compliant vehicles accords with the Vehicle Safety Act and SAFETEA–LU.

2. School Buses

The final rule applies to passenger cars, and to multipurpose passenger vehicles, trucks and buses with a GVWR of 4,536 kg (10,000 lb) or less, except walk-in vans, ''modified roof'' vehicles (which are defined in the standard), convertibles, and certain vehicles with partitions. Because school buses are ''buses'' under our FMVSS definitions (49 CFR 571.3), FMVSS No. 226 applies to the vehicle type unless the vehicle is excluded by a specific exclusion in the standard.

Reconsideration Request

Daimler Truck requested that the final rule exclude school buses from the standard. The petitioner stated that school buses already are subject to ejection mitigation requirements in FMVSS No. 217. Daimler Truck believed that NHTSA has not

[19] To pass-through the certification to FMVSS No. 201, a final-stage manufacturer or alterer simply has to avoid modifying the components of the incomplete vehicle that are within the head protection zone regulated by FMVSS No. 201 and refrain from installing components in the zone. For altered vehicles and vehicles manufactured in two or more stages, the zone ends, if there is no partition, at a vertical plane 300 mm behind the seating reference point of the driver's designated seating position. If an altered vehicle or vehicle manufactured in two or more stages is equipped with a partition between the seating reference point of the driver's designated seating position and a vertical plane 300 mm behind the seating reference point, targets located rearward of the partition are excluded from FMVSS No. 201. These wide confines allow great flexibility in permitting final-stage manufacturers to pass through the certification to FMVSS No. 201.

[20] Under 49 CFR 567, the ''alteration'' of vehicles involves a person modifying a completed vehicle that has been previously certified, other than by the addition, substitution, or removal of readily attachable components, such as mirrors or tire and rim assemblies, or by minor finishing operations such as painting, before the first purchase of the vehicle other than for resale, in such a manner as may affect the conformity of the vehicle with one or more FMVSSs or the validity of the vehicle's stated weight ratings or vehicle type classification. The alterer is required to certify that the vehicle, as altered, conforms to all applicable FMVSSs affected by the alteration in effect in the month and year no earlier than the date of manufacture of the certified vehicle and no later than the date alterations were completed. 49 CFR 567.7.

[21] See, e.g., *http://www.troyproducts.com/news/Airbagann2.html* and *http://www.troyproducts.com/products/Partitions/FORD%20UTILITY%20VEHICLE%20CARGO%20PARTITION.pdf.* See also *http://www.pro-gard.com/QRC/partitions.asp.*

[22] See 49 U.S.C. 30115. See *NTEA,* 711 F.3d at 675 (''Congress in fact explicitly endorsed the pass-through certification regime in 2000'').

considered the interaction of ejection mitigation side curtain air bags with existing school bus safety features, including ''emergency exit window handle accessibility, emergency exit window unobstructed openings, wheelchair restraint anchorages, head impact zones, higher seat backs and side lift door glazed areas.''

Agency Response

We are denying this request because of a lack of support for it. We assume Daimler Truck's petition does not involve ''modified roof'' vehicles [23] and that it involves primarily school buses produced by a single manufacturer ''from the ground up.'' The petitioner provided no information or analysis as to why there would be an inherent conflict between the existing school bus standards and FMVSS No. 226, particularly for school buses that can be originally designed to meet the standard. NHTSA is not aware of inherent conflicts between ejection mitigation side curtain air bags and the safety features mentioned by the petitioner for a bus manufactured in a single stage. Therefore, at this time we have insufficient information to agree that excluding small school buses from applicability of FMVSS No. 226 is warranted. Applying the standard to a wide range of vehicles under 4,536 kg (10,000 lb) best implements the mandate of SAFETEA–LU than reducing the applicability of the standard.

c. Displacement Limit—Issue 1

The final rule specified that the ejection mitigation countermeasure must limit the linear travel of the impactor to not more than 100 mm beyond the location of the inside surface of the vehicle glazing. This displacement limit serves to control the size of any gaps forming between the countermeasure (e.g., the ejection mitigation side curtain air bag) and the window opening, thus reducing the potential for both partial and complete ejection of an occupant.

Reconsideration Request

Advocates states that the final rule ''fails to provide a sound basis for the excessive limit on excursion selected by the agency, and the rule does not establish a robust test procedure and requirements to mitigate partial and complete ejections.'' The petitioner believes that the 100 mm limit in FMVSS No. 217, FMVSS No. 206, and in architectural design codes is used to limit the width of gaps to prevent a person from passing through the opening, and should not be used for purposes of an excursion limit. The petitioner believes that a ''100 mm limit allows the occupant (headform) to pass beyond the plane of the window frame and technically be partially ejected.''

Advocates suggests a 50 mm excursion limit. The petitioner believes that a 50 mm limit results in a ''situation that effectively limits excursion and ejection.'' Advocates also states that data in the Final Regulatory Impact Analysis accompanying the final rule show that 25 percent of the individual tests conducted resulted in excursions of no more than 50 mm, while a 100 mm limit was met by more with 47 percent of tests.

Agency Response

We are denying the petition to reduce the performance requirement in the final rule to 50 mm.

To meet the 100 mm requirement, ejection mitigation side curtain air bags must inflate rapidly enough to be protective for ejection mitigation purposes 1.5 seconds after deployment and maintain inflation so that they are protective 6 seconds after inflation. Moreover, since the side curtain air bags will likely be installed to meet both FMVSS No. 214, ''Side impact protection,'' and FMVSS No. 226, if a side impact is involved, the curtain air bags will inflate within milliseconds of the side crash. We recognize that there is some risk of external contact generally with any kind of displacement limit. However, this risk is greatly mitigated by limiting the displacement to 100 mm. Also, even if there is contact, if the occupant's head or part of the body is behind a curtain, the inflated curtain will provide impact protection from the zero displacement plane to 100 mm past the plane. While that benefit cannot be quantified, the cushioning would mitigate some of the risk of injury from external contact.

Moreover, even if head contact with a surface may occur, and even in the absence of cushioning, as we explained in the final rule, the 100 mm limit achieves the appropriate balance between stringency and practicability. Advocates believes that test data presented in the final rule preamble indicate that 25 percent of the tests conducted resulted in displacement of the headform of less than 50 mm beyond the inside surface of the glazing, and that 47 percent of the test results had displacements under 100 mm. The petitioner believes that by setting the displacement limit at 100 mm, NHTSA ''is only aiming for the 'average' capability of current airbag [sic] technology.''

It was not clear from the petition how Advocates analyzed the data so we attempted to discern what the petitioner meant.[24] The petitioner's assessment is not persuasive. First, we caution that the vast majority of the data was generated in tests using an impactor whose frictional and deflection characteristics differed from the updated specifications set forth in the final rule. In general, tests with the new impactor resulted in greater displacement. The average increase in displacement for the new impactor was 22 mm across all target locations and 31 mm at target A1.

Second and more importantly, the data to which the petitioner refers do not demonstrate the practicability of a 50 mm displacement limit. Rather than evaluating only the data for average displacement across all targets (which we assume the petitioner did), we also analyzed the data with regard to the more challenging target, A1. The data show that only 2 percent [1/55] of tests at target A1 were less than or equal to 50 mm and only 24 percent [13/55] of tests at target A1 were less than or equal to 100 mm. In addition, only one of the three vehicles tested with the new impactor had 100 mm or less displacement at every target location tested under the final rule conditions and no vehicle met a 50 mm criterion at every target location.

In the January 19, 2011 final rule, NHTSA estimated that adopting FMVSS No. 226 with a 100 mm displacement criterion would achieve tremendous

[23] ''Modified roof'' is defined in S3 of the standard. SBMTC submitted a letter asking for confirmation that ''10,000 pound or less GVWR Type-A buses and school buses constructed upon a cutaway chassis, of which the original incomplete vehicle roof has been modified, are excluded from the application of FMVSS 226 by virtue of section 2 and 3 of this standard . . .'' We assume that when SBMTC refers to the original incomplete vehicle roof as having been ''modified,'' the roof was removed in part or in total and replaced in part or in whole. Our answer is yes, the school buses are excluded from FMVSS No. 226 as ''modified roof'' vehicles. The final rule excluded vehicles whose original roofs were modified in part or in total because of the likelihood that the original curtain air bag mounted in the header above the door would be affected by such modification. Thus, we adopted the exclusion to be sensitive to possible practicability problems that could arise if the roof were modified by a later-stage manufacturer or alterer.

[24] We assume Advocates performed its analysis of the data in Tables 10–18 of the final rule preamble. We note that the numbers in each row of the data may represent the average result from several tests at the same condition. In addition, some tests with differing laminate breakage methods were combined. It is unclear if the Advocates analysis used testing at 24 km/h, which is not part of the final rule. We performed an analysis excluding the 24 km/h data. Fifty-nine (59) percent [209/356] of the results in Tables, 11, 12, 14, 15, 17 and 18 were less than or equal to 100 mm and 31 percent [112/356] were less than or equal to 50 mm.

benefits at reasonable costs. We estimated that the rule will save 373 lives and prevent 476 serious injuries per year, at a cost of approximately $31 per vehicle. The final rule provided manufacturers approximately two and one-half years of lead time to begin meeting the standard. This lead time challenged manufacturers to begin installing the life-saving technology as quickly as possible.

Even assuming that a displacement limit of 50 mm were practicable, it would likely be practicable only with more lead time and possibly with significant changes to the countermeasure. The added lead time would have a corresponding nonattainment of the benefit that could have been achieved by a shorter implementation of the standard. Moreover, we must emphasize that there is no scientific basis for correlating various displacement values with quantifiable benefits. No one can say that reducing the displacement limit by 50 percent will reduce ejection or side impact fatalities and injuries by a corresponding amount. On the other hand, although the incremental benefit of a 50 mm limit cannot be quantified, there will be a toll in terms of lives lost due to a delay in implementation of the standard. The agency believes a 50 mm limit does not warrant delaying the benefits of ejection mitigation side curtain air bags, especially when it cannot be shown whether any benefits would result from a 50 mm displacement limit.

A 50 mm limit would also likely entail use of advanced glazing to meet the requirement at side windows. In the FRIA, we estimated that there would be a $15 incremental cost difference between tempered glass and laminated advanced glazing for a standard-size side window in the first or [second] row. Thus, for a two-row vehicle the total incremental cost would be $60. This cost for advanced glazing would have to be added to the cost of the curtain bag, since, under the final rule, a system with movable advanced glazing alone would not be able to perform to the level required for the standard. In comparison, the agency determined that the incremental cost of meeting the final rule with only curtain air bags will be $31 dollars per vehicle. The cost per equivalent fatality of a system comprised of a partial curtain in combination with advanced laminated glazing was twice that of a system utilizing only a curtain. We cannot agree that this cost is reasonable, given the absence of any quantifiable benefit associated with the 50 mm displacement limit.

Lastly, we believe the 100 mm limit demands a high degree of performance. It may be helpful to think of the performance requirement as it would be brought to bear in the real world. During and after impact by the head and upper torso of a mid-size adult male at a velocity present in fatal rollovers, the curtain or other safety countermeasure must withstand the force generated by this sizable mass and restrain the mass within 100 mm of the glazing surface at both the beginning and end stages of a multi-roll crash. If gaps form between the countermeasure (the curtain) covering the daylight opening, the displacement must be contained to 100 mm. The FMVSS No. 226 test is not one in which we simply deploy a curtain and see if there are exposed 100 mm gaps between the curtain and the window frame. Bear in mind that the 100 mm limit is assessed when the countermeasure is struck by the moving massive 18 kg (40 lb) headform. The 100 mm displacement limit ensures that ejection mitigation side curtain air bags will be sturdy, robust, and highly effective in reducing partial and complete ejections.

c. Displacement Limit—Issue 2

The final rule specified that the impactor mass is propelled at points around the window's perimeter. To evaluate the performance of a curtain to fully cover potential ejection routes, the impactor targets four specific locations per side window adjacent to the first three rows of the vehicle. NHTSA determined that impacting four targets around the perimeter of the opening assures that the window will be covered by the countermeasure (curtain), while imposing a reasonable test burden.

Reconsideration Request

Advocates believes that FMVSS No. 226's test methodology allows manufacturers to have ''minimal designs.'' Advocates asks that we include language in the final rule to ''[i]nclude testing of all openings present between and within a tested countermeasure and the appropriate daylight opening, both after deployment and before testing and at the conclusion of testing, such that openings are limited to less than 100 mm and resist the passage of a similarly sized object under an appropriately determined level of force so as to ensure the retention of occupants within the vehicle cabin.'' The testing would be ''similar to the testing processes noted by the agency in FMVSS 206 and FMVSS 217.''

Agency Response

We are denying the petition to introduce a new test to determine countermeasure resistance to passage of a 100 mm object. The petitioner provided insufficient information regarding the need for a new test or the suggested test methodology.

We do not agree there is a need for a new test. In the final rule preamble, the agency responded to a similar suggestion, from glazing manufacturers about a sphere test, although the suggested object dimension was 40 mm. 76 FR at 3249, col. 2. In the preamble, we explained our reasons for disagreeing with the suggestion. Those reasons apply also to Advocates' suggestion and we deny the petitioner's suggestion for the same reasons, which are briefly summarized below. (For simplicity, we refer to the petitioner's suggestion as a sphere test.)

First, we see no safety need for the test. We cannot conclude that ejections that would not be prevented by the primary 100 mm displacement requirement would be prevented by a secondary requirement to ''push an object'' through any gaps in the curtain. Second, the sphere test is not appropriate for vehicles with only side curtain air bags and no advanced glazing, given that there is a time dependence associated with a curtain's ejection mitigation performance. Once deployed, the pressure in the air bag continuously decreases. The 16 km/h test is done at 6 seconds to assure that the pressure does not decrease too quickly. The sphere test could not be able to be done after the 6-second impact in any timeframe that is related to rollover and side impact ejections. Third, the sphere test would indirectly require installation of advanced glazing. As discussed in the final rule, the costs associated with advanced glazing installations at the side windows are substantial in comparison to a system only using rollover curtains, with no quantifiable benefit.

We also do not agree that ''minimal designs'' will result of the rule specifying that designated targets are tested rather than ''all openings.'' In research leading to the development of FMVSS No. 226, we found that ''full window opening coverage was key to the effectiveness of the curtain in preventing ejection.'' 76 FR at 3223. To ensure that the entire window opening is covered, we developed the standard's test procedure such that the impactor mass is propelled at specific targets around the window's perimeter. This testing is objective and imposes a reasonable test burden. The

performance test of FMVSS No. 226 attains one of the principles underlying the standard, which is to ensure that ejection mitigation side curtain air bags fully cover the window opening.

In addition, the petitioner provided no information about a test methodology for the sphere test, such as whether the sphere is to be pushed in multiple orientations with respect to the window, pushed in those orientations in the 6-second time frame, the appropriate push force, or the real world relevance of the orientation of the push force. The request lacks the substantive information that would enable the agency to consider it to a greater degree.

For the above reasons, Advocates' petition is denied.

IV. Response to Petitions Regarding Technical Issues

The final rule included technical elements relating to the test procedure NHTSA will use to assess a vehicle's compliance with the standard. NHTSA received petitions for reconsideration related to various technical elements pertaining to, among other things: Procedures for determining target locations, identifying primary target locations and for adjusting the targets. There were a number of requests relating to provisions in the standard for testing glazing and preparing glazing for testing. Petitions related to technical issues are discussed below.

V. Determination of Impact Target Locations—Boundary of Target Locations

a. Rearmost Limit of the Offset Line

S5.2.1.2 of the standard has procedures for locating target locations in a daylight opening. The procedures define the testing area of the opening. The rearmost limit of the testing area is determined in part by identifying the transverse vertical vehicle plane located at the following distances behind the SgRP with the seats adjusted to their rearmost normal riding or driving position:

—For a vehicle with fewer than 3 rows: 1,400 mm behind the rearmost SgRP;

—For a vehicle with 3 or more rows: 600 mm behind the 3rd row SgRP.

If the ''offset line'' of a particular daylight opening is rearward of the transverse vertical vehicle plane specified above, the transverse vertical vehicle plane defines the rearward edge of the offset line for the purposes of determining target locations. (S5.2.1.2(a) and (b).)

In the final rule, the agency extended the rearward location of the transverse vertical vehicle plane beyond that proposed in the NPRM for vehicles with 1 or 2 rows of seating. The NPRM had proposed that the rearward limit of the plane would be 600 mm behind the SgRP of a seat in the 2nd row for a vehicle with 2 rows, and 600 mm behind the SgRP of a seat in the 1st row for a vehicle with 1 row. We reassessed the proposal after reading various comments and considering that all or part of the cargo area daylight opening rearward of that 1st or 2nd row would be excluded from coverage under the NPRM's provisions. Also, we reexamined the proposal after realizing from our field data analysis for the final rule that cargo area window ejections in the area that would have been the third row had there been a third row of seats were 0.5 percent of all ejection fatalities, which exceeded 3rd row occupant fatalities (0.3 percent).[25]

Accordingly, for the final rule, the agency decided that for vehicles with only 1 or 2 rows of seating, the rearward limit would be increased from the 600 mm distance to 1,400 mm, measured from the SgRP of the seat in the last row.[26] The window openings subject to testing under the 1,400 mm limit are those that would have been adjacent to a third row seat had the vehicle had a third row. By increasing the distance to 1,400 mm, more of the glazing area in cargo area behind the 1st or 2nd row will provide ejection mitigation protection.

Reconsideration Request

The Alliance requests that NHTSA reconsider its decision to increase the rearward limit to 1,400 mm behind the SgRP. The petitioner states that extending the coverage area to 1,400 mm may have ''possible deleterious effects.'' The petitioner states that a partition in the 1,400 mm cargo area behind the 1st or 2nd row could interfere with a curtain air bag, resulting in increased air bag pressure or tears which could ''negatively affect both out-of-position [OOP] performance as well as protection for properly positioned occupants during a side impact.'' The Alliance believes that the risk to properly belted occupants would increase to protect a small number of unbelted occupants and disagrees with that outcome. Further, the petitioner states that the new requirement ''would necessitate a significant redesign of the roof rail airbag [sic] systems in many vehicles'' and that meeting FMVSS No. 226 in conjunction with FMVSS No. 214 and OOP guidelines ''would present a major engineering integration challenge with minimal benefits.''

Agency Response

We are denying the Alliance's petition to reduce the rearward extent of the daylight opening for vehicles with 1 or 2 rows from 1,400 mm to 600 mm.

We do not agree with the Alliance's assertions that the risks associated with extending window coverage to the cargo area outweigh the potential benefits. By extending the daylight opening into the cargo area of 1 and 2 row vehicles, the agency is covering an ejection route that accounts for the loss of 52 lives a year. The FRIA estimated that coverage of the cargo area window openings has a similar level of cost effectiveness as covering the 3rd row windows. The petitioner referred to possible OOP risks and tearing risks from extending daylight opening coverage to the cargo area, but the references were highly speculative and completely unsupported.

With regard to the petitioner's arguments about the potential for obstruction to air bag deployment from cargo area partitions, the arguments are altogether inapplicable to partitions installed as original equipment by a vehicle manufacturer. If the vehicle manufacturer provides a partition for the vehicle, the curtain air bags could be installed just for the rows in front of the partition. Regarding aftermarket partitions, they could be designed with curtain air bag deployment in mind. The partition could have a clearance for the curtain, or have breakaway features. We are aware of several companies marketing side curtain air bag compatible cargo barriers.[27] At this time, we believe new partition designs will be developed to be compatible with ejection mitigation side curtain air bags as market demand develops for such partitions. Speculation about the futility of aftermarket partitions evolving does not convince us to overlook the benefits that are acquired by extending coverage to the cargo area.

The Alliance asserts that the extension of the rearward daylight opening will force the redesign of curtain air bags, which may slow their deployment time. In addition, it refers to a ''major engineering integration challenge'' associated with the 1,400 mm limit.

The agency addressed these points in the final rule preamble and the

[25] We also realized after studying several Special Crash Investigation cases that unbelted occupants were ejected through window openings behind the row in which they were seated.

[26] Under the final rule, a 3-row vehicle is still only required to meet the 600 mm value.

[27] Pro-gard Products LLC (*www.progard.com*). Setina Manufacturing Co., Inc. (*www.setina.com*). Troy Sheet Metal Works, Inc. (*www.troyproducts.com*).

petitioner has not provided any information that leads us to change our position. We pointed out in the preamble that vehicles are already being produced that have side air bag curtains covering windows in rows 1, 2 and 3 (e.g., the MY 2005 Honda Odyssey, MY 2006 Mercury Monterey, MY 2007 Chevrolet Tahoe, MY 2007 Ford Expedition, MY 2007 Jeep Commander, MY 2008 Dodge Caravan, MY 2008 Ford Taurus X, and MY 2008 Toyota Highlander). The designs typically use a single curtain tethered at the A- and D-pillars. (See 76 FR at 3263–3264). We pointed out that, because these designs provide three rows of coverage, covering the cargo area behind the 1st or 2nd row of a vehicle up to window openings adjacent to where a 3rd row would have been is no more of a technical challenge than manufacturers face in covering all openings adjacent to the 3rd row for vehicles with three rows.

Manufacturers have developed and are availing themselves of air bag systems that extend coverage into the 3rd row area of the cargo area. The petitioner has not substantiated its claim that there are technical challenges in extending coverage to the cargo area that manufacturers cannot overcome.

b. Grab Handles

S6.3 of FMVSS No. 226 specifies that, during targeting and testing, NHTSA will remove or adjust the vehicle's steering wheel, steering column, seats, grab handles and exterior mirrors to facilitate testing and/or provide an unobstructed path for headform travel through and beyond the vehicle. These items are not included when the daylight opening is defined and when the daylight opening is tested because the items are unlikely to have a positive effect in impeding occupant ejection and/or could restrict the travel of the impactor headform.

Reconsideration Request

In its petition for reconsideration, the Alliance disagrees with the agency's decision in S6.3 to remove or adjust grab handles. The petitioner states that grab handles located inboard of the air bag deployment path are commonly attached through the headliner or A-pillar garnish trim to the vehicle structure. The petitioner states:

''Removing these handles can change the headliner and trim attachment structure and bending characteristics. Changing the bending characteristics of the headliner can lead to curtain airbags [sic] not deploying as designed and there could be unintended interactions with the testing device.'' The Alliance also states that, for handles located outboard of the air bag deployment path, the grab handles may also function as a reaction surface for curtain air bags. ''If the handles were to be removed, the deployment characteristics and reaction surface of the airbag [sic] would be changed from the design intent. In addition, the surface of the pillar would be changed, which could lead to exposed mounting brackets and rough surfaces that can lead to tearing of the airbag [sic] and/or a change of the deployment characteristics.''

Agency Response

There are several parts to our response.

A. We are denying the request to keep grab handles in place when determining the daylight opening. We affirm our conclusion in the final rule preamble that grab handles are unlikely to ''contribute anything positive to ejection mitigation.'' That is, in a rollover, the grab handle is unlikely to have any effect mitigating the likelihood of ejection since occupants will move toward the daylight opening from many different angles. Given that the presence of the grab handle is unlikely to lower the likelihood an occupant would be ejected from the opening (e.g., it does not lower the chance of ejection by blocking the opening), it would not make sense for the test procedure to allow the grab handle to define the opening being tested.

Moreover, we are concerned that the requested amendment would create a means to manipulate the test requirements, to enable designers to move the impactor away from weak points in the ejection mitigation countermeasure in a false way. Figure 1, below, depicts two renditions of a 1st row daylight opening. The illustration on the left shows the opening without a grab handle; the other shows a grab handle attached to the A-pillar. For convenience, we used an approximation of the target outline, rather than the exact cubic equation prescribed in the final rule. The target outline height and width are dimensionally correct relative to each other.

Assume that the grab handle has a length and width of 52 mm x 191 mm (2 in. x 7.5 in.). Also shown in each of the drawings and listed in Table 9 is the x-direction (longitudinal) distance from the front edge of the daylight opening to the center of each target.

This graphical presentation shows that by adding a grab handle that projects into the daylight opening by about 50 mm, target point A1 is pushed rearward 53 mm [170 mm − 117 mm] away from the lower front corner of the opening. Similarly, target points A2 and A3 are pushed rearward by 17 mm [526 mm − 509 mm] and 35 mm [348 mm − 313 mm] from the front of the daylight opening, respectively. These changes would be a function of the shape, size and location of the grab handle.

We know from our testing that target location A1 is the most challenging of the 1st row targets and that curtain coverage at the base of the A-pillar has been deficient for most curtain designs. This is followed by A3 and A2, in degree of difficulty.

Table 8 shows the average and standard deviation of displacement for the 20 km/h-1.5 second impact for all 1st row target locations for all tests conducted by NHTSA.[28] Targets A1 and A2 have an average displacement of 140 mm and 112 mm, respectively. Thus, moving target A1 away from the base of the A-pillar (by 53 mm, in our example, due to the grab handle) would likely reduce the displacement of the impactor.

Similarly, Targets A3 and A4 have an average displacement of 132 mm and 15 mm, respectively. Moving target A3 towards the A4 target (by 35 mm, in our example) would likely reduce the displacement of the impactor at the A3 location. Finally, the original A2 target is moved rearwards toward the B-pillar (by 17 mm, in our example). Decreasing the proximity to the B-pillar may add support to the curtain, which will tend to reduce the impactor displacement.

Reducing impactor displacement by means that would have real-world effectiveness in limiting occupant ejection is wholly appropriate. However, the Figure 1 example shows that by adding a grab handle to the A-pillar of a 1st row window opening, the stringency of the standard may be reduced by the presence of an item that, in a real-world rollover, is not likely to have an actual effect on mitigating full and partial occupant ejections. The stringency of the standard would be reduced by an artifact of the test procedure. For the above reasons, the agency declines the petitioner's suggestion to modify the determination of the daylight opening.

[28] These data can be found in Table 11 of the final rule. See 76 FR 3228.

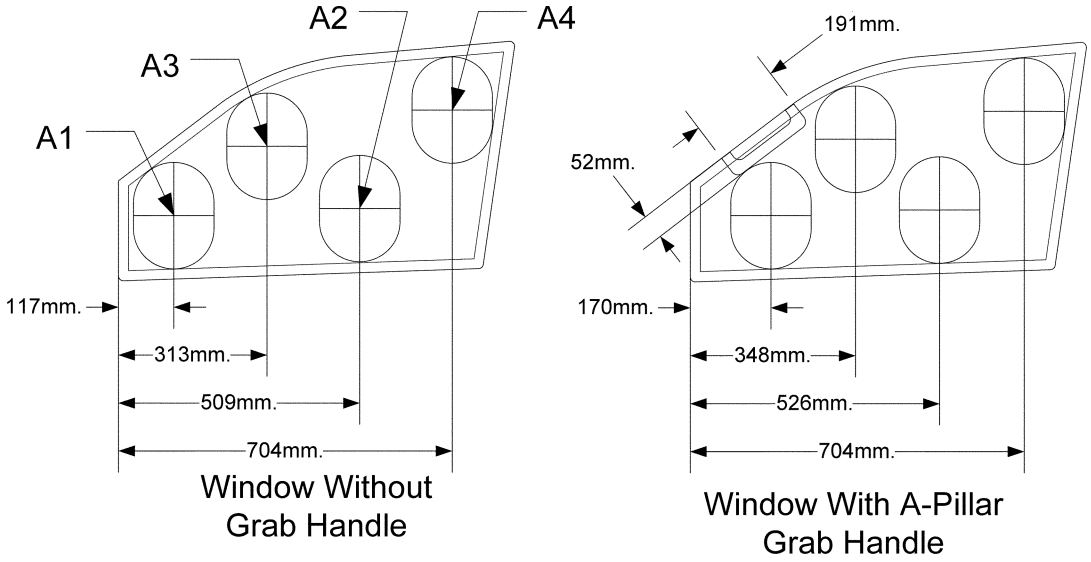

Figure 1 – Effect of a Grab Handle on the Target Locations of a 1st Row Window

TABLE 8—TARGET X (LONGITUDINAL) LOCATION (IN MILLIMETERS) REFERENCED TO THE FRONT EDGE OF THE DAYLIGHT OPENING

Handle location	A1	A2	A3	A4
No Handle	117	509	313	704
A-Pillar	170	526	348	704

TABLE 9—AVERAGE AND STANDARD DEVIATION OF IMPACTOR DISPLACEMENT (MM) FOR FRONT ROW WINDOW, 20 KM/H IMPACT, 1.5 SECOND DELAY

A1	A2	A3	A4
140 ± 36.5	112 ± 55.7	132 ± 56.7	15 ± 39.0

B. Subject to the discussion below, we are denying the request to keep grab handles in place during testing. The Alliance provided no data or information supporting a finding that removal of the grab handles affects the performance of the air bag to an extent that outweighs the agency's interest in ensuring unobstructed passage of the headform in a test. However, we are sensitive to when and how the grab handle should be removed, as discussed below.

C. After the final rule was published, ASC asked the agency about grab handles that are molded into the trim panel and how they are to be removed.[29] Such grab handles are not readily removable by removing fasteners. ASC asked whether such grab handles would be sawn-off or would the entire panel be removed. It recommended the former, with accommodation for taping over any remaining rough edges to avoid damaging the curtain air bag during deployment. It preferred the former since, ASC stated, the presence of the trim panel may provide a reaction surface for the air bag and may cover internal structure not intended to contact the air bag. ASC also requested guidance on when a grab handle should be removed, e.g., would it be removed only during a test in which it would obstruct impactor travel or would it be removed in the testing of other target locations?

Although we have denied the Alliance's request to keep grab handles in place during testing, grab handles will only be removed if they obstruct the impactors travel to a specific target we are testing. We also concur that grab handles should be removed with minimal disturbance to the trim. Overall, our view is that, unless there is reason to the contrary, testing a vehicle in as near the as-manufactured condition as practicable better ensures that the performance we witness in the compliance laboratory is representative of the performance of the vehicle in the real world. For grab handles, we have determined there is reason to remove the component (and the other items listed in S6.3) due to potential interference with the impactor. However, we concur that the grab handle should be removed with minimal disturbance to the trim.

We recognize there is reason to have different methods of removal depending on the handle design. Removing fasteners is an easy and preferred way of removing a grab handle, provided that there are distinct fasteners attaching the handle and that removal of the grab handle does not affect the integrity of the trim. In the situation of a handle molded into the trim panel without dedicated fasteners, cutting away the portion of the handle obstructing the path of the headform is a way to remove the grab handle without degrading the integrity of the trim. Thus, our answer is we will remove the grab handle by removing fasteners if there are distinct fasteners attaching the handle. If there are no distinct fasteners attaching the grab handle (e.g., if a grab handle is

[29] See April 2, 2012 email from Douglas Stein, Chair of the ASC Rollover and Ejection Mitigation Committee, to NHTSA staff, a copy of which is in the docket for today's final rule.

molded into the trim panel without showing dedicated fasteners), we will cut away the portion of the handle that impedes into the daylight opening.

c. Removal of Components During Targeting

S6.2 of FMVSS No. 226 allows some vehicle doors to be opened or removed during testing. S6.3 provides, ''During targeting and testing, the steering wheel, steering column, seats, grab handles, and exterior mirrors may be removed from the vehicle or adjusted to facilitate testing and/or provide an unobstructed path for the headform travel through and beyond the vehicle.'' S6.4 states that, during targeting and testing, interior vehicle components and vehicle structures other than those specified in S6.2 and S6.3 may be removed or adjusted to the extent necessary to allow positioning of the ejection propulsion mechanism and to provide an unobstructed path for headform travel through and beyond the vehicle.

Petition for Reconsideration

The Alliance believes that ''apart from weather stripping and seats . . . nothing should be removed during the targeting procedure. Items such as instrument panels may fall within 100 mm of the inside surface of the glass, and therefore define part of the daylight opening. Section X(e)(1)(i) of the preamble states that NHTSA intends to include interior components within 100 mm of the glass because they 'could have a positive effect on ejection mitigation.' ''

Agency Response

We do not agree generally with the view that ''nothing should be removed.'' However, we note that the petitioner's request is somewhat unclear and the petitioner does not elaborate on its views. The following discussion on our part might help clarify matters. The petitioner refers to an instrument panel within 100 mm of the inside surface of the glazing. This portion of the instrument panel would not be removed since it defines a portion of the daylight opening. That is, the daylight opening would be prescribed around this portion of the instrument panel. Since no target would be placed over this portion of the instrument panel, no restriction of the impactor would occur and no removal of the component would be necessary.[30]

If, however, the petitioner is referring to some other part of the instrument panel not within 100 mm of the inside surface of the glazing which obstructed the ejection propulsion mechanism's path or prevented its positioning, that portion could be removed under S6.4. We do not agree with the approach of having to keep vehicle interior components (other than those within the region 25 mm outboard and 100 mm inboard of the glazing surface) in place for targeting and testing. Removing the objects would help ensure that the testing can be performed, as removal might be needed to allow positioning of the ejection propulsion mechanism or to provide an unobstructed path for headform travel through and beyond the vehicle. Further, removal of these objects would not degrade the ejection mitigation features of the vehicle, since the objects provide no impediment to ejection in the real world (76 FR at 3266). Thus, the request is denied.

VI. Primary Target Locations

a. Determination of the Geometric Center of the Daylight Opening

As part of the procedure that delineates the target locations, the side daylight opening being tested is divided into four quadrants by passing a vertical line and a horizontal line through the geometric center of the daylight opening (S5.2.3).

In its petition for reconsideration, the Alliance expresses concern that calculation of the geometric center of some daylight openings can be very complex and that different test facilities could identify different points as the ''geometric center.'' The petitioner requests that the agency ''allow manufacturers to submit CAD geometric center coordinate data for each side daylight opening, which would then be utilized by the agency's test laboratories when conducting compliance tests.'' The petitioner states that ''this approach is similar to the test procedure for S22.4.1.2 of FMVSS No. 208, [Occupant crash protection,] with respect to the identification of the volumetric center of an inflated air bag.''

Agency Response

It is unclear whether the petitioner is suggesting NHTSA should use or must use manufacturer-submitted computer aided design (CAD) data for locating the geometric center of the daylight opening. As to the former, as a general practice in compliance testing, the agency typically asks for a variety of information from vehicle manufacturers to compare to our determination of pre-test parameters. Examples of these are the design seat back angle and H-point used in FMVSS Nos. 202a, ''Head restraints,'' and in FMVSS No. 208. It is important to note that NHTSA reserves the ability to independently determine these pre-test parameters on the vehicle being tested, notwithstanding the manufacturer input. The agency is not obligated to rely on the information submitted by the manufacturer of the tested vehicle. We may have good reason to disagree with it.

The Alliance specifically references the example of S22.4.1.2 of FMVSS No. 208, where it is necessary to determine the geometric center of a folded and statically inflated air bag. This is a situation where the manufacturer-supplied information simplifies the compliance testing process. When S22.4.1.2 was adopted in FMVSS No. 208, we stated that ''the agency anticipates that manufacturers will provide the target point based on their computer based drawings of the air bag system and the surrounding structure.''[31] Nonetheless, under FMVSS No. 208, the agency has the ability to check this information using methods we deem appropriate. (For instance, the information could be obtained using 3D laser scanning.)

We disagree with the implication that it would be inappropriate if we not obtain the manufacturer CAD data. The pre-test parameter of the geometric center of the window opening is not difficult to determine. We have had no difficulty in efficiently and accurately determining the location of this point in space. We have digitized the actual daylight opening of the vehicle under test by use of a FaroArm®. Once digitized, any number of CAD programs can be used to determine the location of the geometric center with respect to the digitized opening or any other fiduciary mark or reference point on the vehicle. NHTSA may or may not ask for CAD data from the manufacturers to assist us in determining the parameter. It is and should be the agency's prerogative to choose whether to ask for the manufacturer's data.

If the petitioner is asking the latter suggestion, we decline the suggestion that the standard should require NHTSA to use the manufacturer-submitted CAD data. For one thing, we seek to determine the actual geometric center of the daylight opening of the particular vehicle being tested to determine the compliance of the vehicle as produced, rather than use CAD data that may be based on the vehicle as designed. The Vehicle Safety Act requires the compliance of new vehicles as they are

[30] One of the reasons behind the final rule's expanding the inboard distance to be considered when defining the daylight opening, from 50 mm to 100 mm, was the conclusion that this distance would ''be sufficient to encompass interior borders and other components around the daylight opening that might not be easily removed and whose removal may have an unknown effect on the performance of the countermeasure.'' (76 FR 3265.)

[31] 68 FR 68186.

sold, not simply as they are designed. Testing vehicles as manufactured evaluates noncompliances that could occur during the manufacturing process, due to, for example, unanticipated manufacturing problems or to poor quality control. Thus, there are good reasons for NHTSA to test vehicles for compliance ''as manufactured,'' not as designed.

Although some variation between the actual geometric center and that obtained from CAD data could occur based on the build variability of the vehicle, we have found in our testing that small variations in the location of the geometric center has had no effect on the primary targets selected and, therefore, do not affect the final target locations. Nonetheless, for the reason stated above, we prefer that the geometric center be determined from the actual vehicle under test as opposed to CAD drawings of the vehicle.

Furthermore, although we find merit in having manufacturers submit data on various vehicle parameters to increase the efficiency of our test program (obtaining such information enables us to better understand the assumptions manufacturers used in their certification of compliance), we believe that the agency should retain the ability to determine on our own how a compliance test will be conducted on the test vehicle. In that way, we avoid a situation in which we are dependent on manufacturer data with which we do not agree, or which may have been generated using substandard means.

For the above reasons, the petitioner's request is denied.

b. Targeting Large Radius Windows

The final rule regulatory text, at S5.2.2, *Preliminary target locations,* specifies the manner in which primary target locations within the daylight opening are identified. S5.2.2(b) states: ''Place targets at any location inside the offset-line where the target is tangent to within ±2 mm of the offset-line at just two or three points (see Figure 2) . . .'' S5.2.3.3 provides that if there is a primary quadrant that does not contain a target center, the target center closest to the primary quadrant outline is the primary target.

Clarification Request

ASC asks for clarification of the targeting procedure for a window opening with a large radius, regarding the forward-upper quadrant of the daylight opening. It asks how NHTSA will position a target at the ''corner'' location(s) for this area of the window (top image (labeled ''1'') in Figure 2, below.). ASC states that if the procedure is followed as written, the target would only contact the daylight opening offset-line at one point and, therefore, this quadrant would not contain a target. ASC states that S5.2.3.3 then specifies that the forward lower target would become the new primary target (image labeled ''2'' in Figure 2). ASC states that continuing with the specified test procedure, the selected targets would be as illustrated in the image labeled ''3'' in Figure 2. ASC believes that NHTSA intended the targets to appear as shown in the image labeled ''4'' rather than image 3 and asks for clarification of the procedure to achieve the target layout shown in image 4.

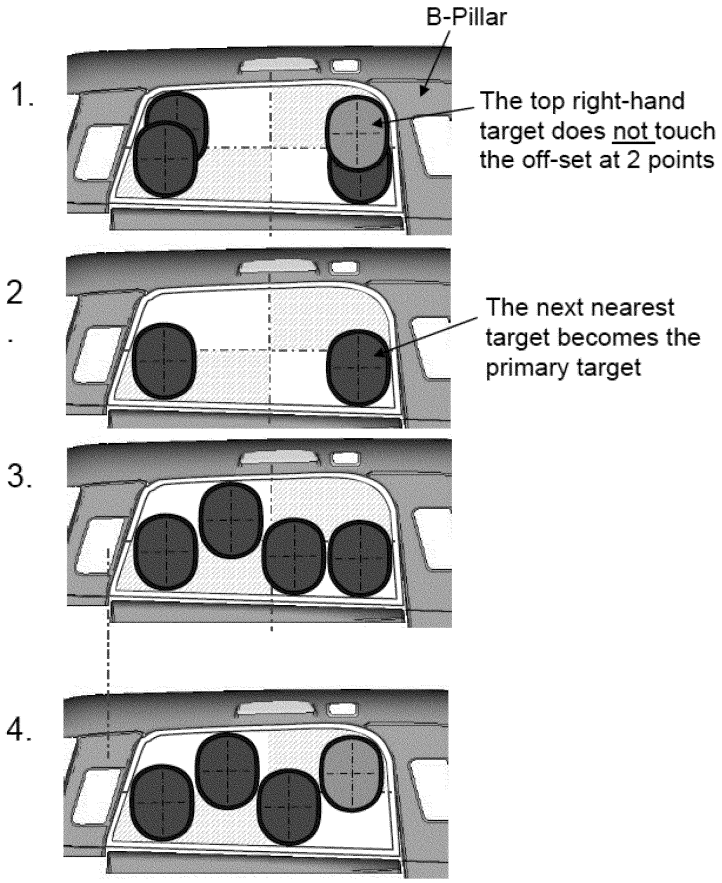

Figure 2 – Graphic provided by ASC, showing a daylight opening with no top right-hand corner

Agency Response

ASC is correct that the procedure of S5.2.3 results in the layout shown in image 3 in Figure 2. However, it was not our intent that the test procedure must specify placement of a target in the forward-upper quadrant of the window opening no matter the shape of the daylight opening. We believe that the absence of a corner in the forward-upper quadrant is not typical, so the final placement of the targets in the example shown is also not typical. NHTSA has not encountered a situation like this in any vehicle we tested.

In general, the test procedure was developed to achieve, to the extent possible, the goal of requiring full window coverage by the ejection countermeasure, while using an objective and repeatable methodology. In developing the test procedure, we considered the many potential sizes and shapes of windows. The number of potential window design variants is great, however, so the end result is that some window shapes may result in a target distribution that is not as dispersed as it might be with other window shapes. Nonetheless, in developing the procedure, we realized that a primary quadrant may not have a target located inside it, so we drafted the procedure to address this eventuality in S5.2.3.3.

We do not believe that the example given by ASC shows a problem that warrants a change to the test procedure. The forward-upper quadrant is an area of the daylight opening where a curtain air bag would be well supported by the header attachment and the B-pillar. These features should contribute to the curtain meeting FMVSS No. 226's displacement limit, so the absence of a target in this area is not a great concern. In addition, a change or addition to the procedure to address this issue could add complexity to the test procedure, even though the addition to the procedure would rarely need to be invoked. For these reasons, we decline to revise the procedure to achieve the layout shown in image 4.

VII. Target Adjustment

a. Coordinate System

The final rule defines the targets using the headform's local coordinate system. The term ''target'' is defined as the x-z plane projection of the headform face shown in Figure 1 of the final rule's regulatory text. Figure 1 of the regulatory text shows the headform's local coordinate system. The initial headform x, y and z axes are to align with the vehicle longitudinal, transverse and vertical axes, respectively. Under S5.6.1, the ''zero displacement plane'' is measured with the headform touching the inside surface of the window, showing that the headform y-axis is pointing outward.

The x-z coordinate system is used in the final rule in determining target location. Among other provisions, the final rule included provisions to account for possible overlapping of the targets (see S5.2.5.1.1) and elimination if appropriate. The rule specifies that after the primary and secondary targets are established, the horizontal and vertical distances between target centers are checked in a specified order. If the horizontal distance between the targets is less than 170 mm and the vertical distance is less than 135 mm, one of the targets is eliminated.

See S5.2.5.1.1, *Target elimination,* in the regulatory text of the January 19, 2011 final rule.

The final rule includes provisions for rotating targets in circumstances of testing daylight openings that might not fit targets well when the targets are oriented in their original upright position (z-axis (long axis) aligned vertically). S5.2.5.2 provides for the rotation of the targets by 90 degrees about the y-axis of the target, such that the positive z-axis of the target (long axis) becomes horizontal and points in the direction of the positive vehicle x-axis. To maintain the same spacing between targets when the long axis of the target is vertical or horizontal, the final rule specifies that the 170 mm value is associated with the x-axis of the targets and the 135 mm value is associated with the z-axis of the targets.

Reconsideration Requests

The Alliance believes that the reference coordinate axes used throughout the regulation, and particularly in S5.2, need illustrations and/or figures to better define the vehicle, headform and target axes, especially with rotation of the headform. TRW and ASC ask for clarification of S5.2.5.1.1 as to the specified distances between the target's local z-axis and x-axis, i.e., whether the distances remain constant irrespective of target orientation. Both the Alliance and ASC provide figures to illustrate their understanding of S5.2.5.1.1 and S5.2.5.2 and ask if their understanding is correct. They suggest that figures be added to the regulatory text to help clarify the relationship between vehicle and target axes when assessing possible target elimination.

Agency Response

We are granting this request. The figures submitted by the Alliance, TRW and ASC correctly interpret the regulatory text in S5.2.5.1.1. We agree that adding figures to the regulatory text would be helpful. We are adding the figures below to the regulatory text as new Figures 5a and 5b. Figure 3 below (new Figure 5a in the regulatory text) shows the vehicle and target coordinate systems from the perspective of a viewer facing the left side of the vehicle exterior. The minimum distance of 170 mm and 135 mm between the x and z axes, respectively, are also shown. The left side of the figure shows these minimum distances for vertically-oriented targets and the right side of the figure shows these for horizontally-oriented targets. Additionally, the right side of the figure provides the orientation of the z axis of the target specified in S5.2.5.2.

Figure 4 below (new Figure 5b in the regulatory text) shows the vehicle and target coordinate systems from the perspective of a viewer facing the right side of the vehicle exterior.

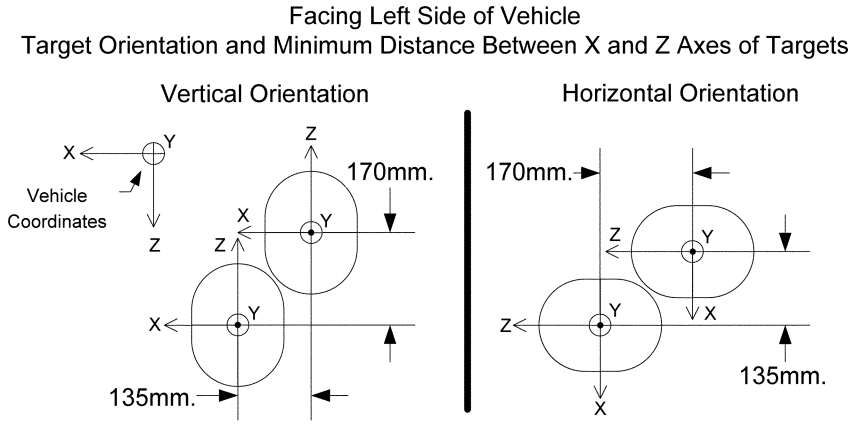

Figure 3 (Figure "5a" in regulatory text)

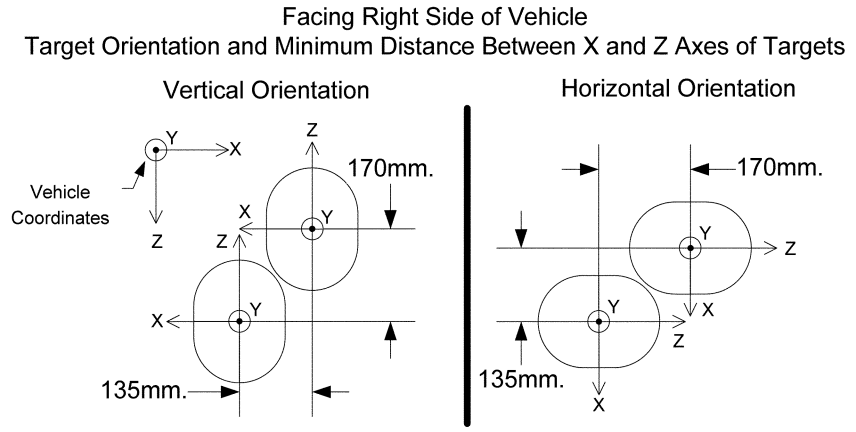

Figure 4 (Figure "5b" in regulatory text)

A reference to these new figures will be made in S5.2.5.1.1 and S5.2.5.2. Also, a typographical error is corrected in S5.2.5.1.1. The Alliance has noted that in the fourth sentence of S5.2.5.1.1, ''y axis'' is incorrectly referenced. The correct reference is ''x axis.''

b. Target Reconstitution

S5.2.5.1.2 of the final rule regulatory text specifies a process by which a third target is added to the daylight opening if there are only two targets remaining at the conclusion of a preliminary stage of target identification, and the absolute distance between the two target centers is greater than or equal to 360 mm. The third added target is placed such that its center bisects a line connecting the two targets that had remained.

Under S5.2.5.2, *Target reorientation—90 degree rotation,* if there are three or fewer (vertical) targets in a side daylight opening at the conclusion of the procedure in S5.2.5.1, the entire target process is repeated with the targets rotated by 90 degrees (horizontal targets). If this second target process results in more targets in the daylight opening than found under S5.2.5.1, i.e., more horizontal targets than vertical targets, the horizontal targets will be used as the final target locations. The possibility exists for a scenario under which three horizontal targets are placed in the daylight opening under S5.2.5.1.2, if only two or fewer vertical targets can fit in the opening.

Reconsideration Request

ASC asks whether a distance greater than 360 mm, specified in S5.2.5.1.2, should be used to determine the need for a third target when the targeting process is performed with targets rotated 90 degrees as per S5.2.5.2. The petitioner asks: ''If the 360 mm has been established to minimize overlapping of targets in the vertical orientation, would it not be appropriate to increase this distance when the targets are rotated 90°?'' ASC believes that, given the headform dimensions of 176.8 x 226.1 mm, if the absolute distance between two vertically oriented targets is at 360 mm, the third target will almost touch the two existing targets (with a maximum of 3.2 mm gap on each side). ASC further states that ''if the absolute distance between 2 horizontally-oriented targets is at 360 mm, the 3rd target will overlap the 2 existing targets by as much as 46.1 mm on each.''

Agency Response

We decline to increase the 360 mm distance for horizontally-oriented targets.[32] There is a potential for three horizontal targets to represent the final target locations under provisions of S5.2.5.2. The question presented is whether the overlap of the horizontal targets is excessive compared to the overlap ''permitted'' by the standard for vertical targeting configurations. To help in this assessment we have constructed Figure 6, below. This figure shows the maximum allowable overlap of targets under three different scenarios.

Note that the maximum amount of overlap is achieved when a target axis of a target is aligned with that of another. In the three scenarios of Figure 6, the horizontal axes are aligned. Example 1 shows the maximum overlap for vertically-oriented targets under the provision of S5.2.5.1.1.[33] The linear overlap of these targets is 42 mm and the area of overlap is 5,460 mm^2. Example 2 shows the maximum overlap for horizontally-oriented targets under the provision of S5.2.5.1.1. The linear overlap of these targets is 56 mm and the area of overlap is 5,060 mm^2. Example 3 shows the maximum overlap for horizontal targets under the provision of S5.2.5.1.2.[34] The linear overlap of these targets is 46 mm and the area of overlap is 3,810 mm^2.

Example 3 is the situation for which ASC suggests the agency should make some form of accommodation to reduce the potential overlap. However, we see that, when compared to Examples 1 and 2, Example 3 has a smaller area of overlap than Examples 1 or 2 and less linear overlap than Example 2. The maximum potential overlap under S5.2.5.1.2 for horizontal targets is, in fact, less than the maximum potential target overlap for other target configurations. All-in-all, we do not believe that these targeting scenarios allow for excessive overlap. The targeting procedures ensure that the ejection mitigation countermeasure is evaluated throughout coverage of the daylight opening. Accordingly, because we do not believe the overlap allowed for horizontal targets by S5.2.5.1.2 is excessive, we see no reason to limit it further.

[32] We wish to note that if a daylight opening has the size and shape to accommodate both three vertically- and three horizontally-oriented targets (as appears in the example shown in the petitioner's figure on page 7 of its petition), the final targets must be vertical (see S5.2.5.2). Thus, the predicament highlighted in the petition in the figure would not occur in real-world testing.

[33] For simplicity, we used an approximation of the target area outline with correct vertical and horizontal dimensions, rather than the exact cubic equation prescribed in the final rule.

[34] The maximum overlap would be the situation where the targets' horizontal axes are aligned. Under S5.2.5.1.2 the third target is placed between two target centers that are separated by at least 360 mm. The third target is placed such that its target center bisects the line connecting the outer targets. Thus the target centers of the overlapping targets are separated by 180 mm.

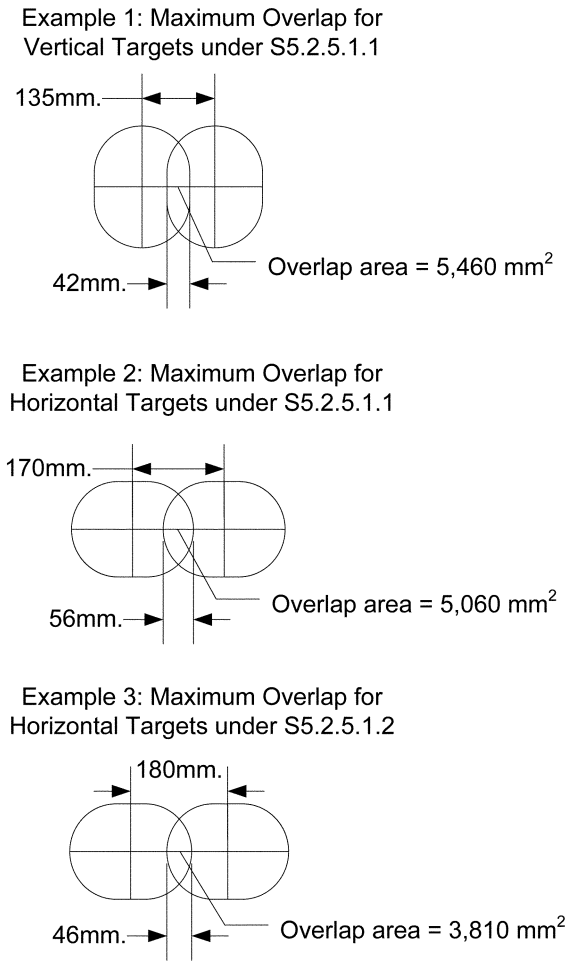

Figure 6 – Maximum overlap of targets under various scenarios

c. Rotating the Headform

The final rule at S5.2.5.3 specifies that if no targets can fit in the daylight opening in either the vertical or horizontal orientation, the target is rotated about its y-axis in 5 degree increments. From the initial target orientation as defined in S5.2.2.2(a), the direction of rotation is such that the local z-axis is moved toward the vehicle positive x-axis. This continues to be the direction of rotation, for all subsequent increments of rotation.

Reconsideration Request

ASC is unsatisfied with the manner in which the headform is rotated under S5.2.5.3. The petitioner states that for some daylight openings, the target/headform would need to be rotated more than 270 degrees from its initial position to fit in the opening. ASC believes that in such an instance, rotating the target/headform in the opposite direction ''would be more consistent with the adjustment capabilities of the impactor.''

Agency Response

We are denying this request. While the suggestion makes some sense, we prefer not deviating from the straightforward, objective instruction in the current regulatory text as to how the target/headform is to be rotated. The agency will perform its testing by rotating the target/headform in the specified direction. However, there is nothing to preclude a manufacturer from rotating the target/headform in the opposite direction if it believes it will have no bearing on its ability to certify to the standard.

VIII. Targeting Accuracy

S7.4 of the regulatory text reads as set forth in the January 19, 2011 final rule.

The NPRM provided the following illustration in the preamble to explain the requirement (74 FR at 63216–63217):

As shown in Figure 16, a zone could be established by first determining the ''ejection impactor targeting point,'' the intersection of the x- and y-axes on the outer surface of the headform. Next, the location of first contact between the impactor and the ejection mitigation countermeasure (e.g., ejection mitigation air bag curtain) would be determined, based on the location of the target outlines using the methodology in the compliance test specified for identifying the target outlines. A 100 mm wide zone would be determined by defining two vertical longitudinal planes that are 50 mm on either side of the expected location of contact by the impactor with the countermeasure. These longitudinal planes define a portion of the strike zone. The other portion of the zone would be defined by locating the axis normal to and passing through the target outline center. As the impactor targeting point passes at test speed through the 100 mm wide zone (as it passes ''over the plate,'' using the baseball analogy), it must stay within ±10 mm of the axis passing through the center of the target outline center (continuing the analogy, it must stay within the vertical zone bounded by the batter's knees and chest). This assessment would not be conducted with an ejection mitigation air bag curtain

deployed, as the deployed curtain could obstruct accurate measurement of the impactor location and the effect of air bag interaction is assessed by the specification previously discussed.

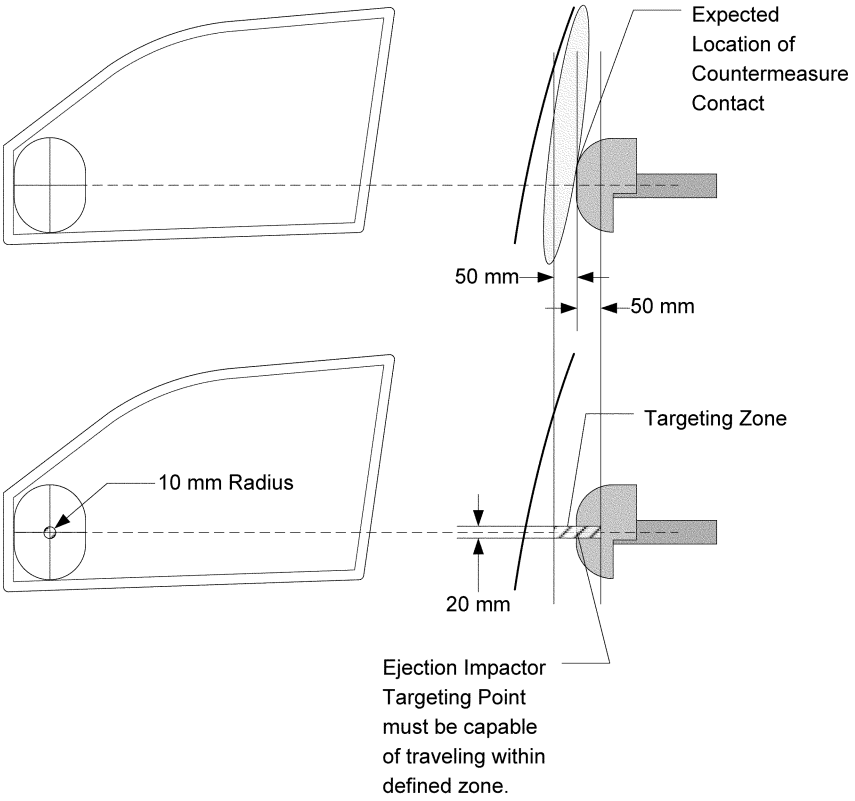

Figure 7
(Showing Figure 16 in NPRM)

Petition for Reconsideration

The Alliance states that it was not certain of the intent of this requirement and was confused by it. It notes that section X(h) of the preamble stated that the final rule required that the ''impactor be able to deliver the center of the headform through a theoretical cylindrical shape.'' The Alliance states its understanding that the distance ''D'' seems to be a segment of a line that is parallel to a vehicle lateral axis. In reference to the longitudinal planes that define the ends of the cylinder, it states that ''vertical and longitudinal planes cannot be defined in vehicle coordinates as forward and rearward of a lateral segment. From a vehicle perspective, they would be inboard and outboard, or right and left of such a segment. Perhaps the second sentence should be modified to read: 'Determine that the ejection mitigation test device can deliver the ejection impactor targeting point within a cylinder with radius of 10 mm centered about the segment 'D' with 50 mm extensions at each end.' ''

Agency Response

We are granting the request to revise S7.4. The Alliance is correct that the zone specified in S7.4 is a cylinder with a 10 mm radius. However, ''D'' does not represent the line segment that the cylinder is centered around. Rather, ''D'' was intended to be a point of reference for the theoretical point of contact with the countermeasure. In response to the Alliance's comment that vertical and longitudinal planes cannot be defined in vehicle coordinates as forward and rearward of a lateral segment, the terms ''forward'' and ''rearward'' in S7.4 were intended to be in reference to the impactor's direction of travel, not the vehicle coordinate system.

After reading the Alliance's petition, we have revised S7.4 solely for purposes of clarifying it. No substantive change is intended. Among other things, we have rewritten S7.4 to indicate the cylindrical nature of the zone of interest and to eliminate the reference to distance ''D,'' since the reference to D was confusing to the petitioner.

IX. Glazing

The final rule included these and other provisions regarding glazing issues:

• The high speed impact test is performed with the glazing pre-broken, fully retracted or removed prior to the

impact test. The vehicle manufacturer has the option of choosing the test condition. (As a practical matter, pre-breaking tempered glazing will destroy the glazing, so tempered glazing is either fully retracted or removed.)

- The final rule does not allow the use of movable glazing as the sole means of meeting the displacement limit of the standard (i.e., movable glazing is not permitted to be used without a side curtain air bag).
- Fixed glazing could be used as the sole means of meeting the displacement limit of the standard; the glazing would have to be advanced glazing in order to meet the pre-breaking procedure of the standard.
- If a vehicle has movable advanced glazing, the low speed test is performed with the advanced glazing retracted or removed from the daylight opening.

a. Applying Pre-Breaking Procedure

TRW repeats a view it made in its comment to the NPRM. TRW requests the agency to reconsider the requirement to perform testing of vehicles with movable advanced glazing with the glazing in place and pre-broken. The petitioner's approach is to test with all movable glass removed, and allow a ''bonus'' to vehicles fitted with movable advanced glazing. The bonus would consist of an additional amount of impactor displacement, so for example, a maximum displacement of 150 mm would be permitted. The petitioner states that such a method would eliminate the need for ''onerous'' glass pre-breakage. The petitioner also believes that our response to this suggestion, when TRW made it in its comment, was ''inappropriate,'' in that the suggested approach would result in a more stringent standard, TRW thought, not one that would be less stringent, as NHTSA had determined.

Agency Response

We do not agree to TRW's request to have all testing with movable glazing be performed with the glazing removed, rather than pre-broken. First, the ''bonus'' approach is undesirable because it presents a policy under which a motorist would have a reduced level of protection when the window is partially or fully rolled down. Thirty-one percent of front seat ejections and 28 percent of all target population ejections are through windows that were partially or fully open prior to the crash. It is for this reason that we determined that the suggested approach would lessen the severity of the test for vehicles with advanced glazing. Increasing the allowed displacement or decreasing the impact speed of the impactor at windows that had advanced glazing would reduce the protection of many motorists who may have the window partially or fully rolled down. (76 FR at 3278–3279.)

We also do not agree that we should adopt the above policy reducing the level of protection for the motorists who had the window partially or fully down as a means of providing relief to the petitioner for what it thinks is an ''onerous'' test procedure. We do not agree that the pre-breaking procedure is ''onerous.'' NHTSA addressed this issue in the final rule preamble (76 FR at 3279):

> We estimate that it takes our laboratory technicians about 30 minutes to mark the 50 mm grid pattern and punch all the holes for a relatively large front row side window. The time it takes to mark the holes per glazing pane can be significantly shortened by laying an unmarked pane on top of an already marked pane. If a subsequent test is to be performed (as might be the case during research and development) and the door trim is installed, it takes approximately 20 to 60 minutes to replace the glazing. Often this is done in parallel with preparations for other aspects of the test, so the overall test time is not affected appreciably. This procedure is not difficult or onerous to conduct.

TRW has not provided any additional information on this topic than what was provided in comments to the NPRM. Our decision on this issue remains as it did when we analyzed those comments.

For the above reasons, the petitioner's request is denied.

b. Pre-Breaking Procedure Applies to All Glazing

Paragraph S5.4 of FMVSS No. 226 states in part: ''Subject to S5.5(b), prior to impact testing, the glazing covering the target location must be removed from the side daylight opening, fully retracted, or pre-broken according to the procedure in S5.4.1 . . .''

The Alliance questions why the phrase ''subject to S5.5(b)'' is used in S5.4. The Alliance states that the phrase ''except for S5.5(b)'' should be used instead, ''to clarify the pre-breaking does not apply to S5.5(b).''

Agency Response

We are not making the change. It appears that the Alliance has misinterpreted S5.4 and S5.5(b). Contrary to the petitioner's understanding, the pre-breaking procedure applies to S5.5(b). Specifically, the pre-breaking procedure applies to fixed glazing tested under S5.5(b). There is never a situation under any part of the standard in which glazing is left in place and unbroken.

In S5.4, the phrase ''subject to S5.5(b)'' modifies the instruction in S5.4. Under S5.4 without the modifying instruction, the vehicle manufacturer has the option of removing the glazing, retracting [35] it, or pre-breaking it. The ''subject to S5.5(b)'' clause is modifying the ability to choose an option. I.e., under S5.5(b), movable glazing must be removed or retracted—it cannot remain for the low speed test. If the glazing is fixed, it will not be removed but it will be pre-broken under the terms and conditions of S5.4.[36]

Accordingly, the petitioner's request is denied.

c. Meaning of ''Movable Glazing''

S5.5(b) includes a direction to ''remove or fully retract any movable glazing from the side daylight opening.''

The Alliance asks what is meant by the term ''movable glazing.'' The petitioner specifically asks about rear windows that are hinged at one edge of the glazing and that are partially opened by rotating the window outwards, which the petitioner calls ''pop-out windows.'' The Alliance believes that because these windows do not fully retract, pop-out windows could function as an FMVSS No. 226 countermeasure and should be considered ''fixed.''

Also, the petitioner asks about emergency egress windows on some large vans and mini-buses. The Alliance states that the windows are closed during normal operation and must be unlocked to provide egress during emergency situations. The petitioner asks that these windows be considered ''fixed.''

Agency Response

We consider pop-out windows to be ''movable glazing.'' ''Movable glazing'' refers to glazing designed to be moved with respect to vehicle or frame. We have added a definition to the regulatory text. The glazing can be opened to the outside environment. Movable glazing is typically not permanently attached on all edges in its frame, compared to fixed glazing. Field data have cases of movable laminated glazing detaching from the window opening in a rollover, partly, we believe, because the glazing is not encapsulated in a framed structure.[37] We do not think

[35] The glazing may be retracted instead of being removed if it can be fully retracted from the daylight opening.

[36] As a practical matter, tempered glass can simply be removed rather than pre-broken. Tempered glass will shatter and vacate the window opening when subjected to the pre-breaking procedure.

[37] See the final rule's discussion of the field data showing the unpredictable nature of movable laminated glazing in real world crashes. 76 FR at 3277–3278.

it is necessary to indicate the mechanism by which the glazing moves, or the direction in which it moves.

Pop-out glazing is more like retractable glazing than fixed glazing in terms of how well it is attached to its frame. We do not have reason to think that a laminated pop-out window would perform better in a rollover than a laminated window that moves up and down on a track mechanism.

With regard to ''emergency egress windows,'' as far as we can tell, the glazing is movable and falls under the term ''movable glazing.'' We come to a different conclusion if an emergency egress window could not be used in the ''open'' position at all when the vehicle is in motion, and have added that condition to the definition.

d. Hinges and Latches

The agency also received a question by email from Autoliv [38] on whether the hinge or latch components of a pop-out window should be considered when determining the daylight opening.

Agency Response

Our answer is yes. Our observations of current pop-out window designs indicate that the hinge and latch mechanisms would be within the 100 mm lateral distance from the inside surface of the window, and as such would be included in the determination of the daylight opening. Hinge and latch components differ from grab handles in that they are physically attached to the window. Thus, their removal for testing may create an unrealistic condition for testing a laminated window since the hinge and latch components may serve to reinforce the window, at least for one test speed.[39] Also, when we include the hinge or latch components in the determination of the daylight opening, we avoid impacting the components during testing. Allowing contact of the headform with hinge or latch components may artificially impede the headform's displacement. Avoiding contact with these structures better evaluates the performance of the ejection mitigation countermeasure.

e. Side Daylight Opening When There Is No Divider

Side daylight opening is defined in S3 as set forth in the regulatory text of the January 19, 2011 final rule.

In response to a comment on the NPRM, the preamble of the final rule addressed non-structural steel dividing elements in a window opening. We stated that ''such elements would serve to define the daylight opening since they do not consist of glazing. We currently have no reasonable way to exclude these dividing elements based on the extent to which they may or may not add structural integrity to the vehicle.'' 76 FR at 3267.

In its petition for reconsideration, the Alliance asks for clarification of the meaning of ''side daylight opening'' with regard to a vehicle without a dividing element of any material between the front and rear glazing (depicted on the figure on page 12 of the Alliance's petition). The petitioner asks: Does the vehicle have a single side daylight opening for the front and rear seating, or does each separate piece of glazing constitute a separate daylight opening? The petitioner supports the latter view.

Agency Response

Our answer is we consider the vehicle to have a single side daylight opening for the front and rear rows of seats. There is no dividing element of any kind between the panes of glazing, no solid component between the two pieces of glazing. When the pieces are retracted (in the full down position), the daylight opening consists of one area. Our view is that the combined panes comprise a single daylight opening. The ''periphery of the opening'' is the frame surrounding the glazing as shown in the Alliance's figure on page 12 of its petition and not just the individual panes of glazing. No rationale or justification was provided by the Alliance for its view.

X. Other Aspects of the Test Procedure

a. Headform Cleaning

In the final rule, the agency declined to adopt a requirement in the regulatory text that the headform skin would be cleaned with isopropyl alcohol prior to a test. Several commenters had asked for such a specification. TRW stated in its comment that frictional attributes of the headform skin affect the manner in which the headform interacts with the rollover curtain, so talc, chalk, or other coatings could affect test results. TRW suggested that the standard specify that ''no coatings shall be applied to the headform skin during testing'' and asked, as did ASC in its comment, that the standard specify that, prior to the test, the headform skin must be cleaned. In the final rule, NHTSA explained that it concluded there was no need for such a requirement, as the commenters provided no data showing the necessity of such provision and a comparable standard, FMVSS No. 201, has no requirement that the free motion headform be cleaned with alcohol prior to testing.

In its petition for reconsideration, the Alliance states that it is concerned about the possible effect that headform surface coefficient of friction has on test repeatability. The petitioner states that it has preliminary data showing that ''significant excursion variation as a function of headform cleanliness,'' and that it would submit the data ''at a future date along with a recommendation.'' The petitioner did not provide such follow-on data or recommendation. The Alliance suggests we use the same procedure that is specified for the headform in FMVSS No. 201.

ASC and TRW also petition to have a headform cleaning procedure prior to each test. The petitioners recommend cleaning the headform prior to the test ''since the deposit of foreign substances on the surface of the headform could lead to a lower or higher coefficient of friction.'' They state that a modeling study shows that headform displacement at targets A1 and B1 beyond the window pane increased and decreased with a 20 percent lower and higher coefficient of friction, respectively. These petitioners further state that the test procedures for upper interior components in FMVSS No. 201, ''Occupant protection in interior impacts,'' (''201U''), provide for cleaning of the headform skin with isopropyl alcohol or equivalent prior to the test.

Agency Response

We disagree that there is a need to require the headform surface be cleaned prior to testing. The simulation results provided by TRW and ASC do not provide sufficient collaboration of their claims. The modeling results showed sensitivity to the coefficient of friction for an impact location, but there was a lack of detail and specificity about the modeling. The results were not shown relevant to actual vehicle testing. In a vehicle test, what would have to be done to the headform skin to achieve a change in the coefficient of friction of ± 20 percent? How much and what type of a foreign substance has to be on the headform to have a ± 20 percent change in the coefficient of friction? How likely is it that a headform in a compliance test would have such an amount of substance on it? Without this basic information, the submitted modeling study has not shown a need for a requirement for cleaning the headform prior to testing.

[38] Copy placed in the docket for this final rule.

[39] For movable windows, the 20 km/h high speed test is performed with the window pre-broken, but maintained in the daylight opening.

The petitioners state that precedent exists for headform cleaning. However, as we said in the preamble to the NPRM, FMVSS No. 201 has no requirement that the headform be cleaned with alcohol prior to testing in either the regulatory text or compliance test procedure (TP). Rather, Appendix A of the TP–201U is a calibration procedure for the instrumented free motion headform. Section 12.1 of that document specifies that the headform is to be cleaned prior to a calibration drop test. Such head skin cleaning is also done before drop test calibration of other ATD heads. A headform drop test is not part of the FMVSS No. 226 procedure.

b. Vehicle Test Attitude

The final rule adopted specifications relating to the vehicle test attitude (S6.1).[40] As described below, the vehicle is supported off its suspension at an attitude determined in accordance with S6.1(a) through (f). S6.1(a) through (f) are set forth in the regulatory text of this final rule.

The Alliance believes that S6.1 does not address vehicle lateral restraint, which the petitioner believes could affect the outcome of the test. The Alliance suggests that the agency add a new paragraph specifying that the vehicle must be secured on a rigid, fixture so that it is adequately restrained, and supported along the sills of the vehicle (with the frame supported at multiple locations in the case of body-on-frame construction), to prevent lateral or vertical movement.

Agency Response

We are declining the Alliance request. The standard addresses vehicle lateral restraint by specifying that the vehicle is supported off its suspension. The agency has had no indication during its extensive test program supporting the development and proposal of FMVSS No. 226 that test repeatability has been affected by a lack of additional lateral restraint. In addition, the Alliance has not provided any data to indicate that the test results can be affected by a lack of additional lateral support.

c. Inspect Air Bag Mounts

TRW and ASC made an identical request related to curtain air bag mounts. The petitioners recommended that ''the regulatory text and/or the test procedure include a provision to inspect the curtain mounts or fastening locations, in the vehicle body, prior to each test, if NHTSA were to test more than one head target location per window. The curtain airbag [sic] mounts or integrity of the fastening locations could be compromised during repeated FMVSS [No.] 226 tests.''

Agency Response

We decline to make the requested change. To begin, we do not agree with the implication that associates a curtain mount failure with a compromised test. If a curtain mount fails during an initial impact with the test device, the failure of the mount is representative of real world performance of the system.

Furthermore, the provision is unnecessary. The agency may choose to perform multiple tests on a vehicle and may reuse certain vehicle hardware, provided that the multiple tests do not compromise the vehicle's performance in the test. In general, we will visually inspect reused mounts prior to a test. We will replace components as the need arises. Having an ambiguous provision in the regulatory text to inspect the curtain mount does not add to the objectivity of the standard.

XI. Secondary Issues

a. Other Typographical Errors

In additional to the typographical errors previously mentioned in this document, this final rule also corrects the following errors which were pointed out by the Alliance in its petition:

- S5.2.1.2(c) has the term ''fixed traverse partition.'' The correct term is ''fixed transverse partition.''
- The first sentence of S5.2.5.3 refers to S5.2.2.2(a). It should be S5.2.2(a).

b. Views on a Dynamic Test Procedure

In the NPRM and the final rule preambles, the agency explained at length its reasons for not incorporating a full-scale vehicle dynamic test in FMVSS No. 226. A relevant excerpt from the final rule is as follows (76 FR 3285):

> We stated in the NPRM preamble, ''a comprehensive assessment of ejection mitigation countermeasures through full vehicle dynamic testing may only be possible if it were to involve multiple crash scenarios. Such a suite of tests imposes test burdens that could be assuaged by a component test such as that proposed today.'' 74 FR at 63186. We hope that in the future, a full vehicle dynamic test, or a suite of tests, could be developed that is appropriate for use in FMVSS No. 226. However, at this time, there is not a viable full vehicle rollover test procedure to evaluate ejection mitigation. . . . [W]e strongly disagree that a delay of this rulemaking to develop a dynamic test would be justified. This final rule will save over 370 lives a year. Each year delayed to develop what is now an indefinable full vehicle test will have a substantial human cost.

We also stated in the final rule that, while we are currently pursuing a research program looking at the development of a dynamic test to address roof strength and seat belts, a full vehicle dynamic test appropriate for ejection mitigation testing might not result as an outgrowth of the agency's roof crush and seat belt system research. ''The vehicle kinematics involved in assessing enhanced protection of the occupant within the vehicle (studied in the roof crush and belt system programs) may be significantly different from those involved in mitigating the risks of occupant ejection to belted and unbelted occupants. A dynamic test that is appropriate for assessing roof crush and seat belt performance may not necessarily provide the same kind of challenge to ejection mitigation.'' *Id.*

In its petition for reconsideration, Advocates expresses a preference for a dynamic rollover test procedure as a way to examine ''a more realistic interaction'' of occupants with rollover related countermeasures and also to ''fully quantify the costs, benefits and practicability of advanced glazing and mitigation of ejection through portals.'' Advocates believes that the agency ''should include the development of a dynamic rollover test procedure in its strategic plan.''

Agency Response

The views stated in Advocates' petition are not new. They were expressed prior to the final rule, and the agency responded to them in the final rule preamble (see above and the final rule preamble, 76 FR 3284–3285).

The views stated by Advocates do not pertain to an aspect of the final rule. The subject is not a matter for a petition for reconsideration.

NHTSA's policy views are subject to change, as safety needs, technologies, resources and priorities change. The public will have ample opportunity to provide insight and opinions on NHTSA's programs at the appropriate times. However, petitioning for reconsideration of our decision on a matter relating to future work and the agency's strategic plan is not a mechanism recognized by our rulemaking regulations. We will not engage in a discourse on our rulemaking and research priority decision-making in today's document.

The current agency rollover research is planned to continue until August 2014. At the close of that program the

[40] There are typographical errors in S6.1. Paragraph heading ''(c)'' is repeated twice, by mistake. The second (c) should be (d). Headings (d) and (e) should be (e) and (f), respectively. Errors appear in cross-references. Today's document corrects these errors. Henceforth from this point, we will refer to the corrected headings and cross-references.

agency will assess any applicability of the results to safety issues beyond the assessment of roof strength and restraint optimization. The need for future research into full-vehicle ejection mitigation testing will then be assessed along with all other agency endeavors and priorities.

XII. Rulemaking Analyses and Notices

Executive Order 12866 (Regulatory Planning and Review) and DOT Regulatory Policies and Procedures

This rulemaking is not ''significant'' under E.O. 12866, ''Regulatory Planning and Review'' and the Department's regulatory policies and procedures. Although the January 19, 2011 final rule was significant, this response to petitions for reconsideration mostly denies the petitions for reconsideration of the rule. The few changes that are being made in response to the petitions for reconsideration are minor, mostly to clarify the requirements of the standard. One substantive change is to permit, for vehicles with a partition separating an occupant seating area from a cargo area, the partition to have a door, but even that change is not significant. We estimate that today's final rule has no effect on the estimated costs and benefits and other economic impacts of the January 19, 2011 final rule.

Regulatory Flexibility Act

The Regulatory Flexibility Act of 1980, as amended, requires agencies to evaluate the potential effects of their proposed and final rules on small businesses, small organizations and small governmental jurisdictions. I hereby certify that this final rule will not have a significant economic impact on a substantial number of small entities. Small organizations and small governmental units will not be significantly affected since the potential cost impacts associated with this final rule will not significantly affect the price of new motor vehicles.

This final rule denies most of the petitions for reconsideration of the January 19, 2011 final rule. To the extent we are amending the original final rule, we are mainly clarifying requirements, such as by adopting a definition. The amendment to permit partitions between an occupant area and a cargo area to have a door may have a small positive impact on some small final-stage manufacturers and alterers by giving them flexibility to use partitions with doors. We do not believe that the impact is significant.

Executive Order 13132 (Federalism)

NHTSA has examined today's final rule pursuant to Executive Order 13132 (64 FR 43255, August 10, 1999). We conclude that no additional consultation with States, local governments or their representatives is mandated beyond the rulemaking process. The agency has concluded that the rulemaking would not have sufficient federalism implications to warrant consultation with State and local officials or the preparation of a federalism summary impact statement. The final rule would not have ''substantial direct effects on the States, on the relationship between the national government and the States, or on the distribution of power and responsibilities among the various levels of government.''

NHTSA rules can preempt in two ways. First, the National Traffic and Motor Vehicle Safety Act contains an express preemption provision: When a motor vehicle safety standard is in effect under this chapter, a State or a political subdivision of a State may prescribe or continue in effect a standard applicable to the same aspect of performance of a motor vehicle or motor vehicle equipment only if the standard is identical to the standard prescribed under this chapter. 49 U.S.C. § 30103(b)(1). It is this statutory command by Congress that preempts any non-identical State legislative and administrative law addressing the same aspect of performance.

The express preemption provision described above is subject to a savings clause under which ''[c]ompliance with a motor vehicle safety standard prescribed under this chapter does not exempt a person from liability at common law.'' 49 U.S.C. 30103(e) Pursuant to this provision, State common law tort causes of action against motor vehicle manufacturers that might otherwise be preempted by the express preemption provision are generally preserved. However, the Supreme Court has recognized the possibility, in some instances, of implied preemption of such State common law tort causes of action by virtue of NHTSA's rules, even if not expressly preempted. This second way that NHTSA rules can preempt is dependent upon there being an actual conflict between an FMVSS and the higher standard that would effectively be imposed on motor vehicle manufacturers if someone obtained a State common law tort judgment against the manufacturer, notwithstanding the manufacturer's compliance with the NHTSA standard. Because most NHTSA standards established by an FMVSS are minimum standards, a State common law tort cause of action that seeks to impose a higher standard on motor vehicle manufacturers will generally not be preempted. However, if and when such a conflict does exist—for example, when the standard at issue is both a minimum and a maximum standard—the State common law tort cause of action is impliedly preempted. See *Geier* v. *American Honda Motor Co.,* 529 U.S. 861 (2000).

Pursuant to Executive Order 13132 and 12988, NHTSA has considered whether this rule could or should preempt State common law causes of action. The agency's ability to announce its conclusion regarding the preemptive effect of one of its rules reduces the likelihood that preemption will be an issue in any subsequent tort litigation.

To this end, the agency has examined the nature (e.g., the language and structure of the regulatory text) and objectives of today's rule and finds that this rule, like many NHTSA rules, prescribes only a minimum safety standard. As such, NHTSA does not intend that this rule preempt state tort law that would effectively impose a higher standard on motor vehicle manufacturers than that established by today's rule. Establishment of a higher standard by means of State tort law would not conflict with the minimum standard announced here. Without any conflict, there could not be any implied preemption of a State common law tort cause of action.

Executive Order 12778 (Civil Justice Reform)

With respect to the review of the promulgation of a new regulation, section 3(b) of Executive Order 12988, ''Civil Justice Reform'' (61 FR 4729, February 7, 1996) requires that Executive agencies make every reasonable effort to ensure that the regulation: (1) Clearly specifies the preemptive effect; (2) clearly specifies the effect on existing Federal law or regulation; (3) provides a clear legal standard for affected conduct, while promoting simplification and burden reduction; (4) clearly specifies the retroactive effect, if any; (5) adequately defines key terms; and (6) addresses other important issues affecting clarity and general draftsmanship under any guidelines issued by the Attorney General. This document is consistent with that requirement.

Pursuant to this Order, NHTSA notes as follows.

The issue of preemption is discussed above in connection with E.O. 13132. NHTSA notes further that there is no

requirement that individuals submit a petition for reconsideration or pursue other administrative proceedings before they may file suit in court.

Unfunded Mandates Reform Act

The Unfunded Mandates Reform Act of 1995 (UMRA) requires Federal agencies to prepare a written assessment of the costs, benefits and other effects of proposed or final rules that include a Federal mandate likely to result in the expenditure by State, local or tribal governments, in the aggregate, or by the private sector, of more than $100 million in any one year ($100 million adjusted annually for inflation, with base year of 1995). This final rule responding to petitions for reconsideration will not result in a cost of $139 million or more to either State, local, or tribal governments, in the aggregate, or the private sector. Thus, this final rule is not subject to the requirements of sections 202 of the UMRA.

National Technology Transfer and Advancement Act

Under the National Technology Transfer and Advancement Act of 1995 (NTTAA)(Public Law 104–113), all Federal agencies and departments shall use technical standards that are developed or adopted by voluntary consensus standards bodies, using such technical standards as a means to carry out policy objectives or activities determined by the agencies and departments. Voluntary consensus standards are technical standards (e.g., materials specifications, test methods, sampling procedures, and business practices) that are developed or adopted by voluntary consensus standards bodies. The NTTAA directs us to provide Congress, through OMB, explanations when we decide not to use available and applicable voluntary consensus standards.

The agency discussed our analysis of the NTTAA in the January 19, 2011 final rule and our conclusion that voluntary industry standards for glazing would not satisfy the agency's objectives in this rulemaking. 76 FR at 3296. Those conclusions continue to reflect the agency's findings in this area.

National Environmental Policy Act

NHTSA has analyzed this final rule for the purposes of the National Environmental Policy Act. The agency has determined that implementation of this action would not have any significant impact on the quality of the human environment.

Plain Language

Executive Order 12866 requires each agency to write all rules in plain language. Application of the principles of plain language includes consideration of the following questions:

- Have we organized the material to suit the public's needs?
- Are the requirements in the rule clearly stated?
- Does the rule contain technical language or jargon that isn't clear?
- Would a different format (grouping and order of sections, use of headings, paragraphing) make the rule easier to understand?
- Would more (but shorter) sections be better?
- Could we improve clarity by adding tables, lists, or diagrams?
- What else could we do to make the rule easier to understand?

If you have any responses to these questions, please write to us about them.

List of Subjects in 49 CFR Part 571

Imports, Motor vehicle safety, Reporting and recordkeeping requirements, Tires.

In consideration of the foregoing, NHTSA amends 49 CFR part 571 as set forth below.

PART 571—FEDERAL MOTOR VEHICLE SAFETY STANDARDS

■ 1. The authority citation for part 571 continues to read as follows:

Authority: 49 U.S.C. 322, 30111, 30115, 30117 and 30166; delegation of authority at 49 CFR 1.95.

■ 2. Section 571.226 is amended by:

■ a. Amending S3 by revising the definition of ''modified roof'' and adding, in alphabetical order, a definition for ''movable window'';

■ b. Revising S5.2.1.2(c), S5.2.5.1.1, S5.2.5.2, S5.2.5.3, S6.1, and S7.4; and

■ c. Adding Figures 5a and 5b after Figure 5.

The additions and revisions read as follows:

§ 571.226 Standard No. 226; Ejection Mitigation.

* * * * *

S3. *Definitions.*

* * * * *

Modified roof means the replacement roof on a motor vehicle whose original roof has been removed, in part or in total, or a roof that has to be built over the driver's compartment in vehicles that did not have an original roof over the driver's compartment. *Movable window* means a daylight opening composed of glazing designed to be moved with respect to the vehicle or frame while the vehicle is in motion.

* * * * *

S5.2.1.2(c) *Vehicles with partitions or bulkheads.* If a vehicle has a fixed transverse partition or bulkhead behind which there are no designated seating positions, a vertical transverse vehicle plane 25 mm forward of the most forward portion of the partition or bulkhead defines the rearward edge of the offset line for the purposes of determining target locations when said plane is forward of the limiting plane defined in S5.2.1.2(a) or (b).

* * * * *

S5.2.5.1.1 *Target elimination.* Determine the horizontal and vertical distance between the centers of the targets. If the minimum distance between the z axes of the targets is less than 135 mm and the minimum distance between the x axes of the targets is less than 170 mm, eliminate the targets in the order of priority given in steps 1 through 4 of Table 1 (see Figure 5, 5a and 5b) (figures provided for illustration purposes). In each case, both the z axes of the targets must be closer than 135 mm and x axes of the targets must be closer than 170 mm. If the minimum distance between the z axes of the targets is not less than 135 mm or the minimum distance between the x axes of the targets is not less than 170 mm, do not eliminate the target. Continue checking all the targets listed in steps 1 through 4 of Table 1.

* * * * *

S5.2.5.2 *Target reorientation—90 degree rotation.* If after following the procedure given in S5.2.5.1 there are less than four targets in a side daylight opening, repeat the procedure in 5.2 through 5.2.5.1.2, with a modification to S5.2 as follows. Reorient the target by rotating it 90 degrees about the y axis of the target such that the target positive z axis is aligned within ±1 degree of the vehicle longitudinal axis, pointing in the direction of the vehicle positive x axis (see Figures 5a and 5b) (figures provided for illustration purposes). If after performing the procedure in this section, the remaining targets exceed the number of targets determined with the original orientation of the target, the reoriented targets represent the final target locations for the side daylight opening.

S5.2.5.3 *Target reorientation incremental rotation.* If after following the procedure given in S5.2.5.2 there are no targets in a side daylight opening, starting with the target in the position defined in S5.2.2(a), reorient the target by rotating it in 5 degree increments about the y axis of the target by rotating

the target positive z axis toward the vehicle positive x axis. At each increment of rotation, attempt to fit the target within the offset line of the side daylight opening. At the first increment of rotation where the target will fit, place the target center as close as possible to the geometric center of the side daylight opening. If more than one position exists that is closest to the geometric center of the side daylight opening, select the lowest.

* * * * *

S6.1 *Vehicle test attitude.* The vehicle is supported off its suspension at an attitude determined in accordance with S6.1(a) through (f).

(a) The vehicle is loaded to its unloaded vehicle weight.

(b) All tires are inflated to the manufacturer's specifications listed on the vehicle's tire placard.

(c) Place vehicle on a level surface.

(d) Pitch: Measure the sill angle of the driver door sill and mark where the angle is measured.

(e) Roll: Mark a point on the vehicle body above the left and right front wheel wells. Determine the vertical height of these two points from the level surface.

(f) Support the vehicle off its suspension such that the driver door sill angle is within ±1 degree of that measured at the marked area in S6.1(d) and the vertical height difference of the two points marked in S6.1(e) is within ±5 mm of the vertical height difference determined in S6.1(e).

* * * * *

S7.4 *Targeting accuracy.* Determine that the ejection mitigation test device can deliver the ejection impactor targeting point through a zone defined by a cylinder with a 20 mm diameter and 100 mm length, when the ejection impactor is moving at the speed specified in S5.5. The projection of the long axis of the cylinder is normal to the target and passes through the target center. The long axis of the cylinder is bisected by a vehicle vertical longitudinal plane passing through the theoretical point of impact with the countermeasure.

* * * * *

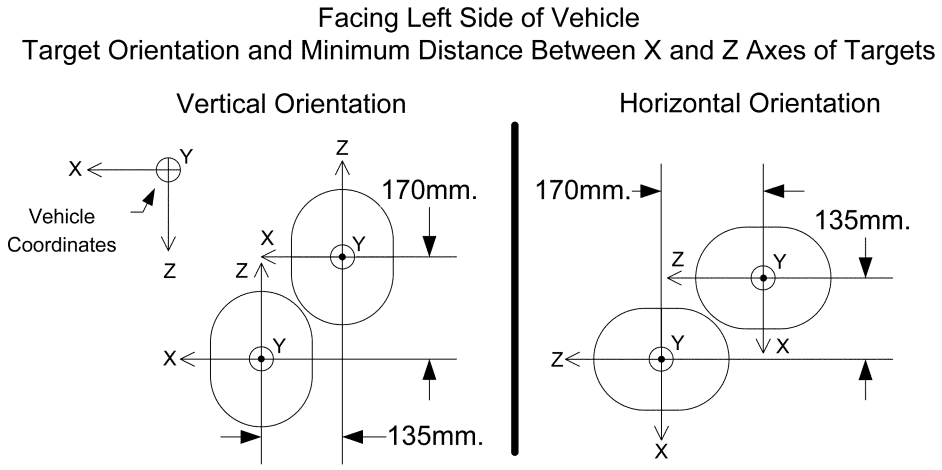

Figure 5a

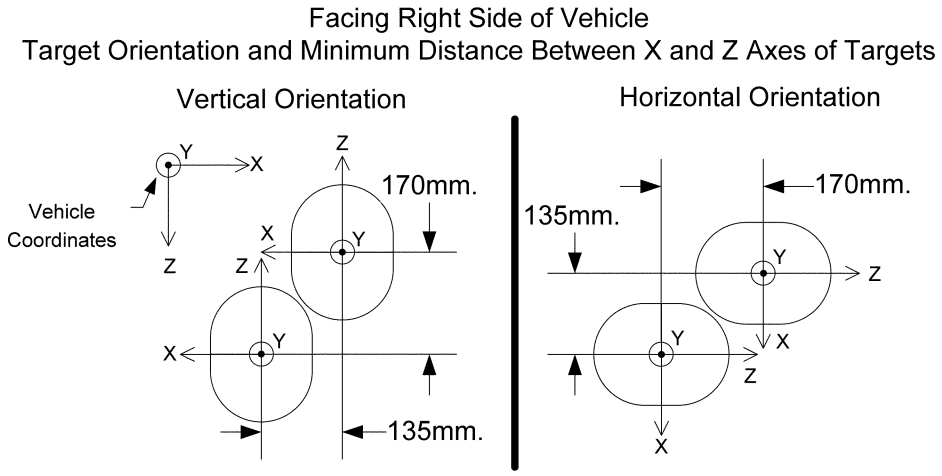

Figure 5b

* * * * *

Issued on August 29, 2013.

David L. Strickland,

Administrator.

[FR Doc. 2013–21605 Filed 9–6–13; 8:45 am]

BILLING CODE 4910–59–P

Reader Aids

Federal Register

Vol. 78, No. 174

Monday, September 9, 2013

CUSTOMER SERVICE AND INFORMATION

Federal Register/Code of Federal Regulations	
General Information, indexes and other finding aids	**202–741–6000**
Laws	**741–6000**
Presidential Documents	
Executive orders and proclamations	**741–6000**
The United States Government Manual	**741–6000**
Other Services	
Electronic and on-line services (voice)	**741–6020**
Privacy Act Compilation	**741–6064**
Public Laws Update Service (numbers, dates, etc.)	**741–6043**
TTY for the deaf-and-hard-of-hearing	**741–6086**

ELECTRONIC RESEARCH

World Wide Web

Full text of the daily Federal Register, CFR and other publications is located at: **www.fdsys.gov.**

Federal Register information and research tools, including Public Inspection List, indexes, and links to GPO Access are located at: **www.ofr.gov.**

E-mail

FEDREGTOC-L (Federal Register Table of Contents LISTSERV) is an open e-mail service that provides subscribers with a digital form of the Federal Register Table of Contents. The digital form of the Federal Register Table of Contents includes HTML and PDF links to the full text of each document.

To join or leave, go to **http://listserv.access.gpo.gov** and select *Online mailing list archives, FEDREGTOC-L, Join or leave the list (or change settings);* then follow the instructions.

PENS (Public Law Electronic Notification Service) is an e-mail service that notifies subscribers of recently enacted laws.

To subscribe, go to **http://listserv.gsa.gov/archives/publaws-l.html** and select *Join or leave the list (or change settings);* then follow the instructions.

FEDREGTOC-L and **PENS** are mailing lists only. We cannot respond to specific inquiries.

Reference questions. Send questions and comments about the Federal Register system to: **fedreg.info@nara.gov**

The Federal Register staff cannot interpret specific documents or regulations.

Reminders. Effective January 1, 2009, the Reminders, including Rules Going Into Effect and Comments Due Next Week, no longer appear in the Reader Aids section of the Federal Register. This information can be found online at **http://www.regulations.gov.**

CFR Checklist. Effective January 1, 2009, the CFR Checklist no longer appears in the Federal Register. This information can be found online at **http://bookstore.gpo.gov/.**

FEDERAL REGISTER PAGES AND DATE, SEPTEMBER

54147–54372 3
54373–54560 4
54561–54734 5
54735–54958 6
54959–55168 9

CFR PARTS AFFECTED DURING SEPTEMBER

At the end of each month the Office of the Federal Register publishes separately a List of CFR Sections Affected (LSA), which lists parts and sections affected by documents published since the revision date of each title.

3 CFR

Proclamations:
9005 54735
9006 54737
9007 54739
9008 54741
9009 54743
9010 54745
9011 54747
9012 54749

5 CFR

Proposed Rules:
300 54434
315 54434
335 54434
410 54434
537 54434
900 54434

7 CFR

27 54970
987 54147

10 CFR

170 54959
Proposed Rules:
51 54789
431 54197

12 CFR

360 54373
Proposed Rules:
336 54401
344 54403
390 ..... 54401, 54403

14 CFR

39 ..... 54149, 54152, 54377, 54380, 54383, 54385, 54387, 54561, 54751
71 54561
97 ..... 54562, 54564
Proposed Rules:
1 54790
21 54791
23 54790
25 54790
27 54790
29 54790
39 ..... 54594, 54596, 54792, 54794
61 54790
71 ..... 54412, 54413, 54415, 54795
91 54790
121 54790
125 54790
135 54790

15 CFR

748 54752

16 CFR

305 54566

19 CFR

101 54755

20 CFR

404 54756

21 CFR

1 54568
73 54758

24 CFR

Proposed Rules:
Ch. IX 54416

26 CFR

1 ..... 54156, 54391, 54568, 54758
48 54758
602 54156
Proposed Rules:
1 ..... 54598, 54796, 54971, 54986
301 ..... 54986, 54996

27 CFR

Proposed Rules:
479 55014

29 CFR

1601 54762

30 CFR

Proposed Rules:
250 54417

31 CFR

34 54801
Proposed Rules:
538 54199
560 54199

33 CFR

100 ..... 54168, 54569, 54571
165 ..... 54171, 54392, 54574, 54576, 54578, 54581, 54583, 54585, 54587, 54588
Proposed Rules:
165 54599

34 CFR

Subtitle A 54588

38 CFR

3 54763

40 CFR

52 ..... 54173, 54177, 54394, 54396, 54960, 54962

60 54766
62 54766
81 54396
271 54178
Proposed Rules:
52 ....54200, 54602, 54813, 54816, 54828, 54831, 55029, 55037
60 54606
63 54606
81 54831
131 54518
152 54841
271 54200

42 CFR

Proposed Rules:
84 54432
405 54842
410 54842
412 54842
416 54842
419 54842
475 54842
476 54842
486 54842
495 54842

44 CFR

64 ....54766, 54770

46 CFR

98 54775

47 CFR

54 54967
Proposed Rules:
64 54201
79 54612

48 CFR

201 54968
206 54968

49 CFR

571 55138
593 54182
1121 54589
1150 54589
1180 54589
Proposed Rules:
173 54849
174 54849
178 54849
179 54849
180 54849
396 54861
571 54209

50 CFR

635 54195
648 ....54194, 54399
660 54548
679 ....54591, 54592
Proposed Rules:
17 ....54214, 54218, 54221, 54613, 54614, 55046
402 54437
648 54442

LIST OF PUBLIC LAWS

Note: No public bills which have become law were received by the Office of the Federal Register for inclusion in today's **List of Public Laws**

Last List August 13, 2013

Public Laws Electronic Notification Service (PENS)

PENS is a free electronic mail notification service of newly enacted public laws. To subscribe, go to *http://listserv.gsa.gov/archives/publaws-l.html*

Note: This service is strictly for E-mail notification of new laws. The text of laws is not available through this service. **PENS** cannot respond to specific inquiries sent to this address.