AUTHENTICATED
U.S. GOVERNMENT
INFORMATION
GPO

FEDERAL REGISTER

Vol. 78 Monday,
No. 174 September 9, 2013

Part II

Department of Transportation

National Highway Traffic Safety Administration

49 CFR Part 571

Federal Motor Vehicle Safety Standards; Ejection Mitigation; Final Rule

DEPARTMENT OF TRANSPORTATION

National Highway Traffic Safety Administration

49 CFR Part 571

[Docket No. NHTSA–2013–0097]

RIN 2127–AL40

Federal Motor Vehicle Safety Standards; Ejection Mitigation

AGENCY: National Highway Traffic Safety Administration (NHTSA), Department of Transportation.

ACTION: Final rule; response to petitions for reconsideration.

SUMMARY: This document responds to petitions for reconsideration of a 2011 final rule that established Federal Motor Vehicle Safety Standard (FMVSS) No. 226, ''Ejection mitigation.'' The standard is intended to reduce complete and partial ejections of vehicle occupants through side windows in crashes, particularly rollover crashes. Generally, the issues raised by the petitioners are of two types. The petitioners ask for reconsideration of policy issues relating to the agency's implementation of the standard, and of technical issues concerning engineering aspects of the rule, particularly as to how the compliance test procedure should be conducted or improved. Most of the requested changes were of the latter type. In general, NHTSA is denying the petitions for reconsideration. The few changes we have made in response to the petitions are minor, mostly to clarify the requirements of the standard.

DATES: *Effective date:* The date on which this final rule amends the CFR is October 9, 2013.

If you wish to petition for reconsideration of this rule, your petition must be received by October 24, 2013.

ADDRESSES: If you wish to petition for reconsideration of this rule, you should refer in your petition to the docket number of this document and submit your petition to: Administrator, National Highway Traffic Safety Administration, 1200 New Jersey Avenue SE., West Building, Washington, DC 20590.

The petition will be placed in the docket. Anyone is able to search the electronic form of all documents received into any of our dockets by the name of the individual submitting the comment (or signing the comment, if submitted on behalf of an association, business, labor union, etc.). You may review DOT's complete Privacy Act Statement in the **Federal Register** published on April 11, 2000 (Volume 65, Number 70; Pages 19477–78).

FOR FURTHER INFORMATION CONTACT: For non-legal issues, you may call Louis Molino, NHTSA Office of Crashworthiness Standards, telephone 202–366–1740. For legal issues, you may call Deirdre R. Fujita, NHTSA Office of Chief Counsel, telephone 202–366–2992. You may send mail to these officials at the following address: National Highway Traffic Safety Administration, 1200 New Jersey Avenue SE., West Building, Washington, DC 20590.

SUPPLEMENTARY INFORMATION:

Table of Contents

I. Background
II. Petitions for Reconsideration
III. Response to Petitions Relating to Implementation of the Standard
  a. Lead Time and Phase-In Schedule
  b. Applicability
  1. Vehicles With Partitions With Doors
  2. School Buses
  c. Displacement Limit—Issue 1
  d. Displacement Limit—Issue 2
IV. Response to Petitions Regarding Technical Issues
V. Determination of Impact Target Locations—Boundary of Target Locations
  a. Rearmost Limit of the Offset Line
  b. Grab Handles
  c. Removal of Components During Targeting
VI. Primary Target Locations
  a. Determination of the Geometric Center of the Daylight Opening
  b. Targeting Large Radius Windows
VII. Target Adjustment
  a. Coordinate System
  b. Target Reconstitution
  c. Rotating the Headform
VIII. Targeting Accuracy
IX. Glazing
  a. Applying Pre-Breaking Procedure
  b. Pre-Breaking Procedure Applies to All Glazing
  c. Meaning of ''Movable Glazing''
  d. Hinges and Latches
  e. Side Daylight Opening When There Is No Divider
X. Other Aspects of the Test Procedure
  a. Headform Cleaning
  b. Vehicle Test Attitude
  c. Inspect Air Bag Mounts
XI. Secondary Issues
  a. Other Typographical Errors
  b. Views on a Dynamic Test Procedure
XII. Rulemaking Analyses and Notices

I. Background

On January 19, 2011, NHTSA published a final rule establishing FMVSS No. 226, ''Ejection mitigation,'' to reduce complete and partial ejections of vehicle occupants through side windows in crashes, particularly rollover crashes (76 FR 3212; Docket No. NHTSA–2011–0004; corrected 76 FR 10524, February 25, 2011).[1] To meet the requirements of FMVSS No. 226, vehicle manufacturers will avail themselves of the side curtain air bag technologies that are already being installed in vehicles to meet FMVSS No. 214, ''Side impact protection.'' In response to the 2011 final rule, manufacturers will enhance these side curtain air bags to make them larger to cover more of the window opening, more robust to remain inflated longer, and more advanced to deploy in side impacts and in rollovers. Further, the curtains will be made not only to cushion but also to be sufficiently strong to reduce the likelihood that an occupant will be fully or partially ejected through a side window.[2]

To assess compliance, the agency adopted a test in which an impactor is propelled from inside a test vehicle toward the windows. The impactor mass, 18 kg (40 lb), is based on the mass imposed by a 50th percentile male's head and upper torso on the window opening during an occupant ejection. The impactor mass is propelled at points around the window's perimeter with sufficient kinetic energy to assure that the ejection mitigation countermeasure is able to protect a far-reaching range of occupants in real world crashes. The vehicle must prevent the impactor from moving more than a specified distance beyond the plane of a window (the impactor must not travel more than 100 millimeters (mm) beyond the location of the inside surface of the vehicle glazing). To ensure that the systems cover the entire opening of each window for the duration of a rollover, each side window will be impacted at up to four locations around its perimeter at two time intervals following deployment.

The standard applies to the side windows next to the first three rows of seats, or next to a cargo area behind the first or second row in vehicles that do not have a second or third row, in motor vehicles with a gross vehicle weight rating (GVWR) of 4,536 kg (10,000 lb) or less. The final rule adopted a phase-in of the new requirements, which begins September 1, 2013.

The final rule achieves tremendous benefits at reasonable costs. We estimate that the rule will save 373 lives and

[1] The notice of proposed rulemaking preceding the final rule was published on December 2, 2009 (74 FR 63180, Docket No. NHTSA–2009–0183).

[2] The final rule responded to sec. 10301 of the Safe, Accountable, Flexible, Efficient Transportation Equity Act: A Legacy for Users,'' (SAFETEA–LU), Public Law 109–59 (Aug. 10, 2005; 119 Stat. 1144), which requires the Secretary of Transportation to issue an ejection mitigation final rule reducing complete and partial ejections of occupants from outboard seating positions.

prevent 476 serious injuries per year (see Table 1 below). The cost of the final rule is approximately $31 per vehicle (see Table 2). The cost per equivalent life saved is estimated to be $1.4 million (3 percent discount rate)—$1.7 million (7 percent discount rate) (see Table 3 below). Annualized costs and benefits are provided in Table 4.

TABLE 1—ESTIMATED BENEFITS OF THE FINAL RULE

Fatalities	373
Serious Injuries	476

TABLE 2—ESTIMATED COSTS* (2009 ECONOMICS) OF THE FINAL RULE

Per Vehicle	$31.
Total Fleet (16.5 million vehicles).	507 million.

*The system costs are based on vehicles that are equipped with an FMVSS No. 214 side curtain air bag system. According to vehicle manufacturers' projections made in 2006, 98.7 percent of Model Year (MY) 2011 vehicles will be equipped with curtain bags and 55 percent of vehicles with curtain bags will be equipped with a rollover sensor.

TABLE 3—COST PER EQUIVALENT LIFE SAVED OF THE FINAL RULE

3% Discount Rate	7% Discount Rate.
$1.4M	$1.7M.

TABLE 4—ANNUALIZED COSTS AND BENEFITS IN MILLIONS OF $2009 DOLLARS

	Annual costs	Annualized benefits	Net benefits
3% Discount Rate	$507M	$2,279M	$1,773
7% Discount Rate	507M	1,814M	1,307

II. Petitions for Reconsideration

NHTSA received petitions for reconsideration of the final rule from: The Alliance of Automobile Manufacturers (Alliance), Mercedes-Benz USA (Mercedes-Benz), Porsche Cars North America (Porsche), Daimler Trucks North America (Daimler Trucks), Advocates for Highway & Auto Safety (Advocates), the National Truck Equipment Association (NTEA), TRW Vehicle Safety Systems (TRW), and the Automotive Occupant Restraints Council (AORC)/Automotive Safety Council (ASC).[3] The School Bus Manufacturers Technical Council (SBMTC) submitted a letter asking for confirmation of its understanding of an aspect of the final rule.

Generally, the issues raised by the petitioners are of two types. Some petitioners ask for reconsideration of policy issues relating to the agency's implementation of the standard, and many raise technical issues relating to engineering aspects of the rule, such as how the compliance test procedure should be conducted or improved. Most of the requested changes in the petitions are of the latter type.

The petitioners' requests relating to policy issues pertain to lead time (the Alliance, Mercedes-Benz, and Porsche request NHTSA to provide more lead time and reduced phase-in percentages related to the compliance date and phase-in requirements), and the applicability of the standard to certain particular vehicle types (NTEA asks for a change with regard to vehicles with a partition that has a door; Daimler Trucks asks that school buses be excluded from the standard). A petitioner (Advocates) requests reducing the displacement limit (Advocates petitions to reduce the 100 mm displacement limit to 50 mm), and asks for a change regarding how openings are to be tested, to prevent what the petitioner calls ''minimal designs.''

With regard to technical aspects of the test procedure, some petitioners (the Alliance, TRW, AORC) ask for reconsideration or clarification of the procedure for determining target locations, such as where the rearward boundary of the target locations should be, and how grab handles should be treated), and the procedures for identifying primary target locations and for adjusting the targets (reconstituting and rotating targets). Several petitioners ask for changes or clarification regarding glazing issues. In addition, a few petitioners point out typographical and other errors in need of correction.

In general, NHTSA is denying the petitions for reconsideration that request substantive changes to the standard. One substantive change we make, in response to NTEA, is to specify that for vehicles with a partition separating an occupant seating area from a cargo area, the partition may have a door. The other changes we have made in response to the petitions are mostly to clarify the requirements of the standard or to correct typographical errors in the regulatory text.

Briefly, this final rule:

Adds a definition of ''movable glazing'' (S3 is amended);

Specifies that for vehicles with a partition separating an occupant seating area from a cargo area, the partition may have a door (S5.2.1.2(c));

Clarifies the regulatory text describing the procedure for target elimination (S5.2.5.1.1), and adds new figures 5a and 5b for clarification purposes;

Clarifies the regulatory text for target reorientation, 90 degree rotation (S5.2.5.2);

Corrects typographic errors in the regulatory text for target reorientation incremental rotation (S5.2.5.3); and,

Clarifies the regulatory text for targeting accuracy (S7.4).

These and other issues are discussed in the sections below.

III. Response to Petitions Relating to Implementation of the Standard

a. Lead Time and Phase-In Schedule

The final rule provided two years of lead time and a multi-year phase-in period, and provided for the use of credits during the phase-in period. In the final rule, the agency significantly reduced the impact velocity of the high speed impact test (performed at 1.5 seconds after deployment of the ejection mitigation side curtain air bag) from 24 kilometers per hour (km/h) (proposed in the NPRM) to 20 km/h (adopted in the final rule). To accelerate the benefits provided by the new FMVSS, after considering a number of factors, including the reduction in impactor speed, the agency in the final rule provided a shorter lead time than the lead time proposed in the NPRM, and

[3] In 2011, AORC changed its name to the Automotive Safety Council (ASC). We will refer to the group as ''ASC.''

adopted phase-in percentages higher than those in the NPRM.[4] The agency determined that the reduced impact speed will result in fewer changes having to be made to existing vehicle designs to meet the final rule's requirements, and so less lead time was needed to begin phasing in the requirements across the fleet. The phase-in percentages could be increased since more vehicles could be certified to the standard. At the same time, to enhance flexibility to manufacturers in developing plans and applying resources toward certifying to the standard, the final rule allowed the use of credits in the 100 percent phase-in year, which is a year longer into the phase-in period than the NPRM would have allowed use of credits.

Under the final rule, starting September 1, 2013, a percentage of the manufacturer's average annual production of vehicles manufactured in the three previous production years, or the manufacturer's production in the current production year, must be certified as meeting FMVSS No. 226. The phase-in schedule is as follows: [5]

TABLE 5—FINAL RULE LEAD TIMES AND PHASE-IN SCHEDULE

For vehicles manufactured on or after the first date and before the second date	The number of vehicles certified to FMVSS No. 226 shall be not less than this percent of the manufacturer's annual production of vehicles	May credits be used?
On or after September 1, 2013; before September 1, 2014	25 percent	Yes.
On or after September 1, 2014; before September 1, 2015	50 percent	Yes.
On or after September 1, 2015; before September 1, 2016	75 percent	Yes.
On or after September 1, 2016; before September 1, 2017	100 percent	Yes.
On or after September 1, 2017	All vehicles, without use of credits	No.

Reconsideration Requests

The Alliance, Mercedes-Benz, and Porsche submitted petitions for reconsideration of the lead time and phase-in schedule.

Alliance Petition

The Alliance requests that the lead time for the beginning of the phase-in be changed to begin on September 1, 2015, and that the phase-in percentages be changed to: 20 percent, 40 percent, 75 percent, 100 percent (with use of credits) and all vehicles (without use of credits). For convenience, the petitioner's suggested phase-in percentages are shown in the following Table 6.

TABLE 6—COMPARISON OF LEAD TIMES AND PHASE-IN SCHEDULES—FINAL RULE TO ALLIANCE

For vehicles manufactured on or after the first date and before the second date	Final rule's phase-in percentages	Alliance's recommended lead time periods and phase-in percentages
On or after September 1, 2013; before September 1, 2014.	25 percent	
On or after September 1, 2014; before September 1, 2015.	50 percent	
On or after September 1, 2015; before September 1, 2016.	75 percent	20 percent.
On or after September 1, 2016; before September 1, 2017.	100 percent (credits may be used)	40 percent.
On or after September 1, 2017	All vehicles, without use of credits	
On or after September 1, 2017; before September 1, 2018.		75 percent.
On or after September 1, 2018; before September 1, 2019.		100 percent (credits may be used).
On or after September 1, 2019		All vehicles, without use of credits.

The Alliance states that the final rule's lead time and phase-in schedule ''impose unreasonable and impractical burdens on vehicle manufacturers and have not been justified by the agency.'' Moreover, the Alliance believes that ''several substantive provisions added by the agency to the requirements proposed in the NPRM have created significant new compliance issues for manufacturers that warrant the full amount of time originally requested by the Alliance in its comments.'' In its comments on the NPRM, the Alliance asked for an additional year of lead time beyond what had been proposed in the NPRM and the allowance for the use of credits for one more year.

The petitioner states that while it might have been true that the lowered test speed (20 km/h from 24 km/h) will require fewer changes to existing designs if all other provisions of the NPRM had remained the same, ''the final rule contains several other substantive changes'' from the NPRM that the petitioner believes are likely to require significant changes to existing designs and thus more time to implement. These changes are: rotating the headform under certain circumstances; new specifications describing features of the impactor; not allowing movable advanced (laminated) glazing during the 16 km/h test; and the increase of the coverage area behind the

[4] The NPRM had proposed the following lead time and phase-in schedule: 20 percent of each manufacturer's vehicles manufactured during the first production year beginning 3 years after publication of the final rule; 40 percent in the fourth year; 75 percent in the fifth year; all vehicles (without use of credits) manufactured on or after the September 1st following 6 years after publication of a final rule.

[5] Special allowances from the phase-in were made for limited line manufacturers, small manufacturers, manufacturers of vehicles manufactured in two or more stages, and alterers. See FMVSS No. 226, S4.1.3. This schedule set forth in Table 5 does not reflect these special allowances.

rear row of seats (for 1- and 2-row vehicles) from 600 mm to 1,400 mm.

Agency Response

We are denying the Alliance's petition for reconsideration of this issue. We are not convinced that the Alliance's information justifies delaying the compliance dates of the final rule as the petitioner suggests. The compliance dates were adopted to achieve the safety benefits [6] of the final rule as quickly as practicable, while balancing the costs and burdens of the regulation.

The final rule provided over two and one-half years of lead time before the phase-in begins. In the Final Regulatory Impact Analysis, NHTSA estimated that 55 percent of the affected vehicle fleet in model year 2011 would have voluntarily installed ejection mitigation side curtain air bags. We believe that the changes that have to be made to these existing ejection mitigation air bag systems to meet FMVSS No. 226, described below, can be made well within the timeframe allotted by the final rule. Manufacturers will have had over two and one-half years to certify to the standard by September 1, 2013 and to begin building credits for early compliance.

The final rule reduced the impact speed of the high speed test considerably, from 24 km/h to 20 km/h. The final rule's high speed test reduced the impact energy by 31 percent $[((24)^2 - (20)^2)/(24)^2]$. As we showed in Table 22 of the final rule preamble, for the new impactor the average reduction in displacement between the 24 km/h and 20 km/h tests, across all tested vehicles and impact locations, was 38 mm. This represents an average displacement reduction of 29 percent.

Vehicles that did not pass the displacement limit in a high speed test of 24 km/h are more likely to pass when the impactor speed is 20 km/h. To illustrate this phenomenon, the final rule referred to a test of a MY 2007 Mazda CX 9 (76 FR at 3292) to show that fewer changes will be needed to existing designs to meet the final rule's requirements. In the final rule preamble, the agency referred to test data which showed that the MY 2007 Mazda CX 9, which could not pass the performance test of the final rule when tested at the 24 km/h impact speed, was able to pass when tested at 20 km/h without modification of the vehicle.

In objecting to use of this example, the Alliance first states that, ''because of the change to the targeting procedure in the Final Rule, NHTSA cannot legitimately state that the CX–9 fully complies'' since, the petitioner argues, NHTSA only evaluated the compliance of the first and second row side daylight openings, and did not test the third row side daylight opening. Second, the petitioner states that even if the statement were accurate, ''the fact that one vehicle model can comply with the requirements in a standard does not mean that the entire fleet can be brought into compliance in a relatively short time, or that the phase-in percentages can be increased.''

In response to the first point, after receiving the petition we tested the third row window with the results shown in Table 7. We found that this target location easily passed both the high speed impact test and the low speed impact test. The target was rotated 90 degrees (horizontal).

TABLE 7—MAZDA CX–9, 3RD ROW 90 DEG. TARGET ROTATION (HORIZONTAL)

Test	Maximum displacement (mm)
20 km/h-1.5 sec.	31.8
16 km/h-6 sec.	−7.1

As to the second point, the CX–9's meeting the requirements of FMVSS No. 226 affirmatively demonstrates that a vehicle that previously did not meet a 24 km/h high speed test was able to meet a 20 km/h test. We believe that it is feasible for many more vehicles in addition to the CX–9 to meet the standard with little or no modification. We never surmised that ''the entire fleet'' is capable of being brought into compliance in a ''short time.'' However, the final rule's over two and one-half years of lead time, phase-in percentages, and additional year of credits provide over six and one-half years to manufacturers to test their vehicles and undertake the necessary modifications to meet the standard.

Manufacturers have already begun informing NHTSA about vehicles in their fleet that they certify as meeting FMVSS No. 226. Every year, under its enforcement authority, the agency requests manufacturers to provide information about the standards to which each make/model is certified, as well as the anticipated production levels for each make/model. We have analyzed these data with regard to FMVSS No. 226. For 2012 model year vehicles, only about 1 percent was projected to meet FMVSS No. 226. For the 2013 model year (some of these vehicles are actually early 2014 models that will be available in 2013), the estimated percentage of the fleet certified to FMVSS No. 226 increased to 12 percent. This remarkable increase in fleet conformance to FMVSS No. 226 since the publication of the final rule, in just one model year, shows that manufacturers have been able to make a substantial increase in the percentage of certified vehicles with relatively swift changes to existing vehicle designs or possibly with no changes at all. This jump in projected vehicle certification indicates that, for some considerable segment of the vehicle population, the changes necessary to meet FMVSS No. 226 were able to be expeditiously accomplished. To us, this indicates that the changes needed to meet FMVSS No. 226 are manageable within the lead time and phase-in schedule of the final rule.

Moreover, this increase in early certification of vehicles allows manufacturers to accrue advanced credits toward future required certification levels at a rapid pace. Certainly, there will be make/models of vehicles which will require greater effort and time to achieve compliance. For those vehicles, the accelerated acquisition of credits will give manufacturers more flexibility to plan and achieve the necessary changes.

We recognize that various changes may have to be made to some existing ejection mitigation side curtain air bag systems to meet the standard. We provided a four-year phase-in period to account for this and to provide time for manufacturers to install ejection mitigation countermeasures in conformance with the standard. However, the adjustments to existing systems do not appear to be extensive enough to warrant putting off the beginning of the phase-in period to more than four and one-half years after publication of the final rule as the Alliance suggests, particularly when the high speed test was reduced in impact energy by 31 percent, a significant amount.

The Alliance argues that target rotation can offset any reduction in excursion due to the reduction in test speed from 24 km/h to 20 km/h. It points to displacements obtained in 20 km/h tests with the old impactor (at vertical target ''A5'' [7]), and estimates displacements that the petitioner thinks would have been obtained with the new impactor at that target (the petitioner added 18 mm to the value obtained with the old impactor). Next, the petitioner compares these estimated vertical A5

[6] 373 fatalities and 476 serious injuries saved annually when all covered vehicles meet FMVSS No. 226.

[7] The petitioner states that A5 is the target located between A1 and A4.

displacement values (associated with tests using the new impactor) with displacement values obtained at A2 and A3 horizontal impacts with the new impactor.

We have evaluated the petitioner's arguments, but cannot agree with them. First, the Alliance assumed that 18 mm should be added to all test results to compensate for the lower friction of the new impactor, which we believe is unfounded. Although displacements will likely increase in tests with the new impactor due to the lower friction of the new impactor compared to the old impactor, it is unreasonable to add 18 mm across the board to the values obtained in tests with the old impactor. The 18 mm value referenced in the final rule preamble is an average derived from all three test speeds on three different vehicles. It ranges from a 69 mm increase to a 13 mm decrease. In other words, the relationship between the old and new impactor results is vehicle- and test-dependent, and there is not a rationale basis for assuming there is an equivalence factor of 18 mm that can be applied universally.

Second, it does not appear appropriate to compare vertical A5 impacts to displacement values obtained from a horizontal A3 impact, which is near the header, and a horizontal A2 impact, which is near the bottom of the curtain. Ejection mitigation side curtain air bags have different challenges in limiting displacement of the headform at the top, middle, and bottom of the curtain. Differences in displacement values obtained in tests at the different locations cannot be deemed to be due to a single factor, i.e., target orientation.

The Alliance states that rotating the headform and targets by 90 degrees to a horizontal orientation ''will affect the targeting for a large number of vehicles.'' We agree that for some vehicles, coverage of some daylight openings will need to be increased to account for additional impact locations, or some daylight openings may be newly subject to the standard since they did not have a target with the headform oriented vertically, but do have a target with the headform horizontal. From a safety and SAFETEA–LU perspective this is a positive outcome, since it will serve to reduce the potential for partial or complete vehicle ejection. The petitioner does not provide data to support its assertion that the requirements are unreasonable or impracticable.

The petitioner provides no information substantiating the claim that its members are unduly burdened because various small cars, midsize cars and crossovers will have additional targets. We recognize that manufacturers will have to reassess some daylight openings to see if new targets can be identified that were not subject to ejection mitigation requirements when the impactor was oriented solely vertically. However, we believe that most vehicles have an ejection mitigation system to begin with, so orienting the impactor horizontally may just mean that the air bags need to be modified to provide additional daylight opening coverage and perhaps with modification to other aspects of the overall system. The major elements of an ejection mitigation side curtain air bag system, i.e., the design and installation of the curtain, inflator hardware, tethers, and rollover sensor, are already in place in most vehicles. For most vehicles, only adjustments will be needed to their systems. For those vehicles that do not have an ejection mitigation system, the lead time and phase-in schedule and use of credits will provide manufacturers flexibility in planning for their implementation.

Further, even if horizontal impacts and use of the new impactor will slightly increase headform excursion, the petitioner provides no information that show that existing curtains cannot be made to comply within the final rule's implementation schedule. For a curtain that displays increased displacements resulting from rotating the targets and/or using the new impactor, generally these displacements could be addressed by widening the curtain or slightly increasing inflation pressure. These changes are capable of being implemented within the schedule of the final rule, as opposed to more fundamental changes to the system that would have been needed to sufficiently manage the energy of the 24 km/h impact speed test.

We recognize that manufacturers will need time to test their vehicles to certify the ejection mitigation systems using the new impactor. The over two and one-half years of lead time provides sufficient time to test vehicles and modify them as needed. We see no basis for extending this lead time to over four and one-half years, as the petitioner suggests. The increasing number of vehicles certified with ejection mitigation side curtain air bags meeting FMVSS No. 226 is a testament to the availability and practicability of designs meeting the standard.

Further, we note that the FMVSS No. 226 test is a component test that does not involve full-scale vehicle crash testing. As such, countermeasure assessment and certification testing should be easier and faster to conduct compared to a standard involving a full-scale vehicle crash test. Modifications to existing ejection mitigation side curtain air bags can be assessed relatively quickly to see if the changes enable the vehicle to meet FMVSS No. 226. The notable increase in the percentage of the new vehicle fleet that are or will be certified to FMVSS No. 226 in one year—from 1 percent (model year 2012) to 12 percent (model year 2013)—also signifies that manufacturers are able to evaluate vehicle designs swiftly and efficiently.

On another point, the Alliance points to the agency's decision specifying that the low speed (16 km/h) impact test, conducted at 6 seconds after deployment of the ejection mitigation side curtain air bag, must be performed without the use of advanced glazing for movable windows. The Alliance states that ''by precluding the use of advanced glazing as a countermeasure for compliance purposes, NHTSA has again increased the compliance challenge for many vehicles.''

In response, we are not persuaded by this point. From a practical point of view there was no increased ''compliance challenge'' that warrants the requested delay in compliance dates. To date, very few manufacturers have used advanced (laminated) glazing in movable window applications as an ejection countermeasure. We do not believe this will change significantly in the future due to added cost and the ability to meet the test requirements with side curtain air bags alone. Furthermore, the decision to which the Alliance refers did not affect manufacturers that want to use advanced glazing in movable windows to supplement an ejection mitigation side curtain air bag system in the high speed (20 km/h) impact test. For those manufacturers using advanced glazing in movable windows, the high speed (20 km/h) impact test will still be performed with the glazing (pre-broken) in place. Further, the decision does not affect manufacturers that want to use advanced glazing in fixed widow applications. The petitioner's argument that the change influences the ability to meet the lead time and phase-in requirements of the final rule has not been substantiated.

The last change made by the final rule that the Alliance cites is the increase of the coverage area behind the last row of seats (for one and two row vehicles) from 600 mm behind the seating reference point (SgRP) (NPRM) to 1,400 mm behind the SgRP (final rule). The Alliance objects to the increase and petitions for it to be changed back to 600 mm. (We respond to this portion of the

petition in a later section of this preamble.) The petitioner states that extending the coverage area to 1,400 mm behind the SgRP means that manufacturers will have to redesign the entire side air bag system, and assess effects relating to matters such as air bag volume, air bag deployment timing, and protection under FMVSS No. 214 and No. 201. The Alliance states that, if NHTSA declines to reconsider the change, ''[The agency] needs to recognize the added impact that the change has on the ability of manufacturers to satisfy the final rule's phase-in schedule.''

We are not convinced that extending the daylight opening coverage in the area behind the last row (for one and two row vehicles) from 600 mm to 1,400 mm will require the inordinate delay in the compliance dates. As noted in the final rule preamble (76 FR at 3263), vehicles are already being produced that have side air bag curtains covering rows 1, 2 and 3 row windows. The designs typically use a single curtain tethered at the A- and D-pillars. The petitioner provided no data as to the number of vehicles that would be affected by the change, or affected to the extent that necessitates a major redesign, or whose production problems cannot be relieved by way of credits. Further, given that there already are designs that provide three rows of coverage, manufacturers are familiar with and have availed themselves of air bag systems that extend coverage further into the cargo area. The petitioner has not substantiated its claim that there are technical challenges in extending coverage to the cargo area that cannot be met in the schedule provided by the final rule.

For the reasons provided above, the Alliance's petition is denied.

Reconsideration Request—Mercedes-Benz Petition

In its petition for reconsideration, Mercedes-Benz states that it supports the phase-in suggested by the Alliance and additionally petitions with regard to a matter related to Mercedes-Benz's Sprinter model line. Mercedes-Benz states that the final rule does not adequately address the practicability issues associated with large, heavy vehicles (GVWR greater than 3,856 kg (8,500 lb) that incorporate expansive daylight openings. The petitioner states that the vehicles ''are typically exempt from the FMVSS–214 side impact barrier requirements and therefore pre-FMVSS–226 plans did not necessarily include side impact countermeasures (airbags [sic] and sensing) for rear seating rows. Therefore, the application of these new requirements imposes a level of burden which was not addressed in the NPRM or in the subsequent Final Rule.'' Mercedes-Benz states that the Sprinter platform is scheduled for ''renewal'' during the timeframe that, under the final rule, all vehicles must comply with FMVSS No. 226 without the use of credits. The petitioner states: ''Given the scope of design change required to bring this platform into full compliance, the most practical phase-in is one which allows development resources be focused entirely on the new platform rather than extended to the parallel development of two platforms. The Alliance proposal provides this flexibility by allowing the use of credits prior to September 1, 2019.'' Alternatively, the petitioner asks that the phase-in allow the use of accumulated credits for vehicles with a GVWR of 3,856 kg (8,500 lb) or more until September 1, 2018.

Mercedes-Benz states that the varied derivatives of the Sprinter platform will require significant redesign to meet the requirements of FMVSS No. 226, including air bag inflators, air bag cushions, and roll detection sensing. To illustrate, the petitioner refers to a ''high-roof variant of the Sprinter platform,'' which incorporates a large sliding door. Mercedes-Benz states that an inflatable restraint countermeasure would have to extend from the roof to the beltline (a vertical dimension of approximately 1,100 mm (43 in)), and also satisfy deployment timing and out-of-position performance requirements. ''With regard to our product cycle concern, it is suggested that a development effort of this scope should be focused entirely upon the next generation platform.''

Agency Response

We deny Mercedes-Benz's request for an extension of the phase-in for an additional year.[8] We understand that this denial may cause the petitioner to modify its plans related to the Sprinter passenger van variant. In the final rule preamble, we acknowledged that the final rule phase-in schedule ''may result in some manufacturers needing to reassess and modify their plans.'' 76 FR at 3292. However, we determined that ''the two year lead time and the four-year phase-in correctly balances the manufacturers' needs for flexibility and the needs of the agency to limit the length of time for the phase-in to a reasonable period and achieve the safety benefits of the final rule as quickly as practicable.'' *Id.*

Mercedes-Benz states that heavy vehicles (GVWR greater than 3,856 kg (8,500 lb)) ''are typically exempt from the FMVSS–214 side impact barrier requirements and therefore pre-FMVSS–226 plans did not necessarily include side impact countermeasures (airbags [sic] and sensing) for rear seating rows. Therefore, the application of these new requirements imposes a level of burden which was not addressed in the NPRM or in the subsequent Final Rule.''

The agency believes that manufacturers have had sufficient time to plan for the implementation of ejection mitigation side curtain air bags in the subject vehicles. Although the subject vehicles (GVWR greater than 3,856 kg (8,500 lb)) are excluded from FMVSS No. 214's moving deformable barrier requirements, Standard No. 214's pole test requirements apply to such vehicles manufactured on or after September 1, 2015. (We are currently in the middle of the phase-in of the pole test requirements. The phase-in for most light vehicles began September 1, 2012 and ends September 1, 2014.) To meet the pole test, the vehicles will have side air bags and sensors.

As to what type of side air bag system, when NHTSA issued the FMVSS No. 214 pole test final rule in 2007, we noted that the ejection mitigation rulemaking was imminent (72 FR 51908, 51932–51933; September 11, 2007). We believed that manufacturers would plan for the ejection mitigation rulemaking requirements by considering side curtain air bags covering the front and rear rows. NHTSA stated in that 2007 final rule:

> We believe that manufacturers will increasingly install air curtains in their vehicles because air curtains can potentially be used as a countermeasure in preventing ejection in rollovers. (''NHTSA Vehicle Safety Rulemaking Priorities and Supporting Research: 2003–2006,'' July 2003, Docket 15505.) NHTSA has announced that it is developing a proposal for an ejection mitigation containment requirement.[9] NHTSA believes that side curtains installed pursuant to FMVSS No. 214's pole test could readily be developed to satisfy the desired properties of a countermeasure. (NHTSA report ''Initiatives to Address the Mitigation of Rollovers,'' *supra*.) We believe that manufacturers will install curtains in increasing numbers of vehicles in response to this [FMVSS No. 214] final rule, the voluntary commitment, and in anticipation

[8] We have explained above our reasons for denying the Alliance's petition for reconsideration of this issue.

[9] Additionally, Sec. 10301 of SAFETEA–LU requires the Secretary to issue by October 1, 2009 an ejection mitigation final rule reducing complete and partial ejections of occupants from outboard seating positions (49 U.S.C. 30128(c)(1)). [Footnote in text.]

of NHTSA's ejection mitigation rulemaking. The curtains will provide head protection to front and rear seat occupants in side impacts. 72 FR at 51933.

As shown above, the vehicles to which Mercedes-Benz refers will be required to have side air bag technology by 2015, and manufacturers are likely already designing for implementation of the technology. The petitioner has had sufficient time to implement design changes to this air bag technology to meet the ejection mitigation requirements of the January 19, 2011 final rule.

As far as challenges with respect to sensor requirements, we note that the supplemental information provided by the petitioner indicates that relief was only needed for the passenger van version of the Sprinter. We understand that Mercedes-Benz would be able to certify compliance of the cargo and chassis cab versions. This indicates that a sensor and algorithm to deploy the first row window curtain will be developed, which could also be used for the passenger van. We note also that the agency has no specific performance requirements for the deployment sensor, so manufacturers have great latitude in this area.

Moreover, it appears that there are ways that the petitioner's duplication of effort developing two platforms can be reduced. For example, the rear windows adjacent to the second and higher rows appear to be fixed. As such, advanced glazing could be used to meet the requirements of both the high and low speed tests. With this countermeasure in place it may reduce or eliminate the need for side curtain air bags to cover these locations.

Another option would be for Mercedes-Benz to introduce the new platform ahead of schedule. As Mercedes-Benz noted, the Sprinter Passenger Van (the variant of the Sprinter that Mercedes-Benz claims it needs more time to make compliant) only makes up 10 percent of the Sprinter production, which is a relatively small number of vehicles. Mercedes-Benz could avoid having to modify the current platform by advancing the production of the new platform of the Sprinter Passenger Van.

We realize that Mercedes-Benz would like to avoid expending resources on the current Sprinter platform and would rather devote efforts solely to the new platform. Unfortunately, there are costs associated with any implementation schedule that is shorter than that of a manufacturer. We seek to develop a lead time and phase-in schedule that balances manufacturers' desires and the safety benefits to the extent possible. Because of the relief provided in the final rule by allowing an additional year for use of credits, Mercedes-Benz will be able to produce vehicles until September 1, 2017, just as it would have under the NPRM. We believe we have achieved the sought-after balance with the final rule and are not convinced that the petitioner's information and efforts warrant delaying that schedule.

Reconsideration Request—Porsche Petition

Porsche petitioned for reconsideration of the implementation schedule, requesting additional time to achieve compliance with the standard. The petitioner asks for more time ''in consideration of the small number of Porsche vehicles that will not be redesigned during the timeframe established in the final rule.'' Porsche requests that full compliance (without the use of credits) does not become mandatory until September 1, 2019. The petitioner states that for Porsche, the amendment would impact no more than 4,000 to 5,000 vehicles annually during the September 1, 2017 to August 31, 2019 timeframe. ''Compared to the twelve million-plus light duty vehicles sold annually in the U.S., this is a relatively small number of vehicles and in fact it constitutes less than a single day of sales by a large manufacturer. [Footnote omitted.]'' The petitioner states that—

> the request will ultimately have no net negative impact on safety because utilizing the amendment sought hinges on the ability to introduce fully compliant vehicles to market early and generate early compliance credits that can be used to offset the small number of vehicles affected. Our request is that NHTSA simply provide us an opportunity to use early compliance credits for a slightly longer period of time than what would be permitted by the rule issued January 19, 2011. . .. [T]he new ejection mitigation requirements will require changes to the body-in-white which, in the case of our sports cars, means that compliance cannot be achieved until the vehicle undergoes a major redesign. Absent this major redesign, we will be required to bring production for affected vehicles to a premature halt.

Porsche asks, if we do not agree to adopt the schedule suggested by the Alliance, that NHTSA consider adopting a provision ''to provide manufacturers with additional compliance flexibility to address a small number of vehicles that may be uniquely challenged.'' The provision would be applicable to only a limited number of vehicles for a two-year timeframe, and would only be available to manufacturers that introduced fully compliant technology early and in advance of the compliance deadlines contained in the final rule.

Agency Response

We deny Porsche's request for an extension of the lead time and phase-in schedule.

We understand that manufacturers, such as Porsche, might have unique problems depending on factors such as organizational resources, product mix, and product life cycle. The final rule provided relief to those manufacturers by allowing an additional year for use of credits. We believe that the two and one half-years lead time and the four-year phase-in correctly balances the various needs of manufacturers, and the needs of the agency to limit the length of time for the phase-in to a reasonable period and achieve the safety benefits of the final rule as quickly as practicable. Because of the relief provided in the final rule—the additional year for use of credits—Porsche will be able to produce vehicles until September 1, 2017, just as would have been the case under the NPRM.

We do not necessarily agree with Porsche that its requested amendment ''will ultimately have no net negative impact on safety.'' Porsche argues that there will be no negative safety impact because early compliance credits ''can be used to offset the small number of vehicles affected.''

NHTSA has determined that two and one half-years of lead time and a definite phase-in schedule would provide the needed time for manufacturers to install ejection mitigation countermeasures to address the dire rollover safety problem as quickly as reasonably possible. Under the final rule, a vehicle manufactured or after September 1, 2017 will have a rollover ejection countermeasure. All persons purchasing a vehicle manufactured on or after September 1, 2017 will be assured that the vehicle offers the safety provided by FMVSS No. 226.

Under the petitioner's scenario, no such assurance can be given. There will be purchasers, many of them, who will buy a new vehicle which will not provide ejection mitigation protection while an identical vehicle—manufactured on the same day—will, even when it is practicable for both vehicles to provide the protection. Such an outcome introduces an element of ''buyer beware'' in the marketplace, which we are not prepared at this time to accept when it comes to meeting the FMVSSs.

This situation can be distinguished from a phase-in period when credits accrue. In that situation, the agency has determined that the date has not yet been attained on which compliance

with a standard is practicable across the fleet. The use of credits provides an incentive to manufacturers to bring more compliant vehicles to market early than that achievable across the fleet.

Porsche recommends an approach that will give it relief from problems resulting from a business model it uses relating to the product life cycle of its vehicles. We do not find its arguments sufficiently compelling to extend the certification date two years. Thus, the petition is denied. We note that Porsche's requested amendment departs a bit from the scope of the rulemaking. The request has policy implications that would be more suitable for deliberation in a separate rulemaking, rather than in this response to petitions for reconsideration.

b. Applicability

1. Vehicles With Partitions With Doors

S5.2.1.2 of FMVSS No. 226 has procedures for locating target locations in a daylight opening. The procedures define the testable area of the vehicle. Generally speaking, the rearmost limit of the testable area is determined by identifying the transverse vehicle plane located at the following distances behind the seating reference point (SgRP):

—For a vehicle with fewer than 3 rows: 1,400 mm behind the rearmost SgRP;
—For a vehicle with 3 or more rows: 600 mm behind the 3rd row SgRP.

The final rule made an allowance for vehicles with partitions or bulkheads (we will use ''partition'' to refer to both terms) that separate areas of the vehicle with designated seating positions (namely the driver's area) from areas of the vehicle without designated seating positions (e.g., a rear cargo area). Vehicles with partitions—i.e., the vehicles themselves—generally were not excluded from the standard [10]; rather, only the side daylight openings rearward of the partition were excluded from testing, provided that there must not be seating positions rearward of the partition. For such vehicles with a partition separating a seating area from a non-seating area, S5.2.1.2(c) of the standard has a provision regarding how impact target locations are determined. Under S5.2.1.2(c), if a vehicle has a fixed transverse partition through which there is no occupant access and behind which there are no designated seating positions, the rearmost limit of the offset line is located 25 mm in front of the partition rather than 1,400 mm behind the rearmost seating reference point, assuming the former is positioned more forward than the latter. We made this accommodation after deciding that, if there is a permanent partition that separates areas of the vehicle with designated seating positions from areas that do not have designated seating positions, the likelihood of an occupant being ejected from an opening in an area without a designated seating position is low. However, the final rule specified that the partition must not provide access for an occupant to pass through it; i.e., a partition must not have a door separating the occupant space from non-occupant space. 76 FR at 3290.

Reconsideration Request

NTEA was supportive of the testing requirements in S5.2.1.2(c), but states that ''NHTSA's limitation of that accommodation—prohibiting a door in the partition—makes it of little value in the vocational truck and van marketplace of today and the future.'' The petitioner asks NHTSA to reconsider this decision and provide the exemption even when there is a door in the partition. NTEA claims that many partitions installed on vocational vehicles have doors and that ''[i]n the future we expect that partitions with doors will be the norm. Those doors are and would be latched in compliance with FMVSS [No.] 206.'' The petitioner suggests that the agency has to provide data demonstrating that occupants are passing through the doors in the partitions and are being ejected through a side window ''with some significant frequency.'' The petitioner also disputes certain statements in the final rule preamble concerning the suitability of Incomplete Vehicle Documents (IVDs) and the pass-through certification process for final-stage manufacturers and alterers.

Agency Response

Rollover crashes are a significant and a particularly deadly safety problem. As a crash type, rollovers are second only to frontal crashes as a source of fatalities in light vehicles. Data from 10 years of Fatal Analysis Reporting System (FARS) files (2000–2009) indicate that frontal crash fatalities have averaged about 11,600 per year, while rollover fatalities have averaged 10,037 per year. Ejection is a major cause of death and injury in rollover crashes. According to 2000–2009 FARS data, on average 47 percent of the occupants killed in rollovers were completely ejected from their vehicle. A double-pair comparison from 2000–2009 FARS data show that avoiding complete ejection is associated with a 64 percent decrease in the risk of death. FARS data does not subtract out multi-stage work trucks, and the FARS data above is inclusive of all vehicles.

The January 19, 2011 final rule will substantially reduce the risk of ejection in rollovers. The final rule enhances the side curtain air bag systems that are now being installed, ensuring that the curtain systems are made larger to cover more of the window opening, improved to deploy in rollovers in addition to side impacts, made more robust to remain inflated longer and sufficiently strong not only to cushion an impact but to keep the occupant from being fully or partially ejected through the window as well. We estimate that the ejection mitigation rule will save 373 lives and prevent 476 serious injuries per year. Some of these lives saved and injuries prevented will come in vehicles with a GVWR between 2,722 kg and 4,536 kg (6,001 lb and 10,000 lb).

In addition, the January 2011 final rule responds to § 10301 of SAFETEA–LU, which required the Secretary of Transportation to issue an ejection mitigation final rule reducing complete and partial ejections of occupants from outboard seating positions. Section 10301, paragraph (a), directed the Secretary to initiate rulemaking proceedings for the purpose of establishing rules or standards that will reduce vehicle rollover crashes and mitigate deaths and injuries associated with such crashes for motor vehicles with a GVWR of not more than 4,536 kg (10,000 lb). Paragraph (c) directed the Secretary to initiate a rulemaking proceeding to establish performance standards to reduce complete and partial ejections of vehicle occupants from outboard seating positions and to issue a final rule by a specified date. (See 49 U.S.C. § 30128(a) and § 30128(c)(1).

In the January 2011 final rule, we excluded daylight openings rearward of the partition from the standard's testing requirements, if the partition does not have a door. We emphasize that we did not exclude partitioned vehicles themselves from the standard, we only excluded the daylight openings rearward of the partition (and only if there are no seating positions rearward of the partition) from certain testing requirements. This means that a partitioned work truck would need to meet the ejection mitigation side curtain air bag requirements of FMVSS No. 226 for the occupant cab of the vehicle.

We did not exclude ''trucks with partitions'' outright from the standard in the January 2011 final rule. Under our

[10] Certain vehicles with partitions were excluded from the standard. The vehicles were: Law enforcement vehicles, correctional institution vehicles, taxis and limousines, provided that the vehicle was produced by more than one manufacturer or by an alterer (S2). We are not referring to that exclusion in this discussion.

regulations implementing the Vehicle Safety Act, the work vehicles to which NTEA refers are ''trucks'' as defined in 49 CFR 571.3.[11] It is appropriate to apply FMVSS No. 226 to trucks notwithstanding the presence of a partition, because a partition would not lessen the risk of the vehicles' rollover involvement or the risk of ejection to occupants forward of the partition. Work trucks must be driven and that driver deserves the same protection as if he or she were driving for personal use, for example, a similar pick-up truck or van. Since partitioned vehicles are not immune from rollover crashes and their occupants are not invulnerable to rollover ejection, we did not exclude ''trucks with partitions'' outright from the standard.

However, NTEA did not seek a complete exclusion for work trucks from the requirements of FMVSS No. 226. Instead, its petition focused specifically on S5.2.12(c). In response to NTEA's petition for reconsideration, we have decided to grant the request to remove the qualification in S5.2.1.2(c) that there must not be a door in the partition. In the final rule, we were concerned that a door in a partition may be open during a rollover and may become an aperture through which an occupant could be thrown. However, the petitioner states that the doors in the partitions are designed to have latches. Thus, on reconsideration, we conclude that there is a fair likelihood that the partition door will be closed and latched, and that the latched door reduces the likelihood of ejection through the partition door. Granting the request gives final-stage and other manufacturers additional flexibility in meeting the requirements of FMVSS No. 226, without unreasonably reducing the safety of such vehicles.

While we have granted NTEA's request for reconsideration, we do not agree with NTEA's generalized assessment regarding the availability of IVDs and pass-through certification.[12] NTEA's petition for reconsideration states that final-stage manufacturers and alterers will not be able to use IVDs to pass through certification to the ejection mitigation standard. NTEA quotes from an IVD from an unidentified incomplete vehicle manufacturer regarding FMVSS No. 201, ''Occupant protection in interior impact.'' NTEA states that, based on this sample IVD, ''even a partition that is designed so as not to interfere with deployment of the OEM designed airbag [sic] system would be impermissible for pass-through compliance.''

By way of background, NTEA's petition for reconsideration of the FMVSS No. 226 final rule was filed prior to a 2013 decision from the U.S. Court of Appeals for the Sixth Circuit denying NTEA's petition for review of a NHTSA final rule promulgating FMVSS No. 216a, ''Roof crush resistance, Upgraded standard.'' *National Truck Equipment Association* v. *National Highway Traffic Safety Administration,* 711 F.3d 662. Similar to this rule, NHTSA promulgated FMVSS No. 216a at the direction of Congress through SAFETEA–LU. The agency issued FMVSS No. 216a to include multi-stage vehicles with a GVWR up to 4,536 kg (10,000 lb) built on either a chassis cab or an incomplete vehicle with a full exterior van body. NTEA wanted to have final-stage manufacturers excluded from FMVSS No. 216a and filed a petition for review with the Sixth Circuit challenging NHTSA's adoption of FMVSS No. 216a.

The Sixth Circuit denied NTEA's petition, finding, among other things, that NHTSA conducted the rulemaking proceedings promulgating FMVSS No. 216a in a sufficiently thorough manner, and that pass-through certification, which, the Court acknowledged, was envisioned by Congress, may be relied on by final-stage manufacturers and alterers to demonstrate compliance. The Court found that the 216a standard is practicable within the meaning of the Vehicle Safety Act—

> because it provides final-stage manufacturers and alterers with reasonable means of demonstrating compliance. To conclude otherwise would disregard Congress's instruction to put a thumb on the scale for safety in considering the substantive limitations of the Act. *See Public Citizen, Inc.,* v. *Mineta,* 30 F.3d 39, 58 (2d Cir. 2003). After all, Congress intended for manufacturers to adjust to the regulatory demands of the industry rather than the other way around. *Cf. Chrysler,* 472 F.2d at 671 (describing the Safety Act as technology-forcing legislation).

711 F.3d at 673–674.

We have analyzed NTEA's present petition for reconsideration of FMVSS No. 226 and do not agree with NTEA's generalized assertions regarding the availability of IVDs and pass-through certification. Vehicles subject to the standard can be certified using reasonable means such as IVDs and pass-through certification, among others, consistent with the intent of SAFETEA–LU to reduce complete and partial ejections from vehicles with a GVWR less than 4,536 kg (10,000 lb).[13] Based on the agency's understanding of the work truck industry, and the tailoring in this rule and petition, the agency believes that final-stage manufacturers will be able to meet this new regulation.

First, FMVSS No. 226 will not apply to over 90 percent of the vehicles produced by NTEA's members. NTEA's petition for reconsideration of FMVSS No. 226 states that the final-stage manufacturer is typically known as a ''distributor'' for NTEA membership purposes, as these companies are distributors for the body manufacturer. NTEA explains that as part of the companies' distributor function, the companies install the body or equipment on a chassis. NTEA states: ''Typically, the customer purchases a chassis through an authorized OEM dealership and decides upon the body and/or equipment that will be needed to fulfill the customer's needs.'' The final stage manufacturer/body distributor ''takes the chassis and completes the vehicle by installing the necessary body and equipment, sending the completed truck back to the dealership for customer delivery.'' Many of the work vehicles[14] NTEA describes in its petition (''dump trucks, utility company vehicles, aerial trucks, fire trucks, ambulances, beverage delivery trucks, walk-in vans, digger derricks and snow removal vehicles'') are built on chassis-cabs. A chassis-cab is defined as ''an incomplete vehicle, with a completed occupant compartment, that requires only the addition of cargo-carrying, work-performing, or load-bearing

[11] ''Truck'' is defined as a motor vehicle with motive power, except a trailer, designed primarily for the transportation of property or special purpose equipment. Some work vehicles could be classified as ''multipurpose passenger vehicles'' (MPVs) under 49 CFR 571.3. This discussion refers to trucks but it is relevant to MPVs as well.

[12] Over the years NTEA has repeatedly objected to the IVD process and pass-through certification in response to our rulemaking actions, and has done so again in its present petition, even though the objections do not seem related to its requested amendment regarding the partition door.

[13] The final rule excludes vehicles with a ''modified roof'' from the standard. ''Modified roof'' means ''the replacement roof on a motor vehicle whose original roof has been removed, in part or in total.'' See S3, FMVSS No. 226. While not raised in the petitions, in reviewing this matter we believe the term should include a roof that has to be built over the driver's compartment in vehicles that did not have an original roof over the driver's compartment. Such vehicles are similar to vehicles whose original roof has been removed in part or in total since pass-through certification will not be available to final-stage manufacturers using incomplete vehicles that did not have an original roof over the driver's compartment.

[14] Some of the vehicles listed are walk-in vans, which are excluded from FMVSS No. 226 (see S2 of the standard). Walk-in van is defined as ''a special cargo/mail delivery vehicle that only has a driver designated seating position. The vehicle has a sliding (or folding) side door and a roof clearance that enables a person of medium stature to enter the passenger compartment area in an upright position.'' (Definition in S3 of FMVSS No. 226.)

components to perform its intended functions'' (49 CFR 567.3). This means that chassis-cabs are equivalent to similar pick-up trucks, minus the truck bed. Based on previous submissions from NTEA, NHTSA understands that the number of ''chassis and non-chassis cabs'' manufactured in the U.S. for calendar years 2007, 2008 and 2009 with a GVWR greater between 2,721 kg and 4,536 kg (6,000 lb and 10,000 lb) was only 8 percent of the vehicles produced by NTEA members.[15] Moreover, NTEA fails to demonstrate that there will be an actual issue with its members manufacturing those vehicles. In fact, of the 8 percent of vehicles, the vast majority (67 percent) of the vehicles produced under 4,536 kg (10,000 lb) GVWR are built on chassis-cabs. These chassis-cabs come with a completed occupant structure from large vehicle manufacturers such as Ford, GM, or Chrysler, and the final-stage manufacturer will be provided an IVD.

Second, there is ample time for incomplete vehicle manufacturers to produce chassis-cabs with ejection mitigation side curtain air bag systems. Under the January 2011 final rule, FMVSS No. 226 does not apply to vehicles produced by final-stage manufacturers and alterers until September 1, 2018, which is a year longer than the time given to manufacturers of single-stage vehicles to achieve full compliance with the standard.[16] The long 7½-year time period provided to final-stage manufacturers and alterers provides the multistage manufacturing industry abundant opportunity to develop pass-through certification strategies, such as chassis-cabs that provide ejection mitigation side curtain air bag systems for the driver and front passenger side windows in the cab. Final-stage manufacturers can mount the work-performing equipment behind the completed cab without affecting the ejection mitigation side curtain air bags. There is no occupant space, no daylight opening through which an occupant can be ejected behind the chassis-cab of these work-performing vehicles—basically, there is nothing rear of the chassis-cab subject to FMVSS No. 226. The final-stage manufacturer only has to complete the vehicle by attaching the work-performing equipment to the chassis behind the completed cab, follow the IVD, and pass through the certification to FMVSS No. 226.

Third, vehicle manufacturers using non-chassis-cabs also have certification options available. NTEA reported that non-chassis-cabs comprised 33 percent of the vehicles rated in the GVWR range of 2,722 kg to 4,536 kg (6,001 lb to 10,000 lb) in 2007, 2008 and 2009 (24,452 out of 73,029). *Id.* Similar to chassis-cabs, other incomplete vehicles that have a completed occupant structure for the driver's compartment will come equipped with ejection mitigation side curtain air bags. Non-chassis-cabs with a driver's compartment can readily be developed in that 7½-year period to achieve pass-through certification to FMVSS No. 226. For example, an incomplete vehicle configuration is wholly viable for van-based work vehicles or vehicles using cutaway chassis, with ejection mitigation side curtain air bags provided for the daylight openings adjacent to the driver's and right front passenger's seats. Partitions can be used to exclude areas of these vehicles from the standard's requirements.[17] Alternatively, a final-stage manufacturer that also produces the truck body (''distributor'') could design the body to meet FMVSS No. 226 without use of partitions. We have designed this rule to apply where people sit with side windows. The body could be designed such that it does not have any side daylight openings (side windows) rearward of the driver's position, or if it has side daylight openings, none close enough to an occupant position such that the standard's testing requirements apply or none large enough to pass the FMVSS No. 226 headform. With such designs, there are no side daylight openings subject to FMVSS No. 226's testing requirements rearward of the 1st (driver's) row. Alternatively, if the distributor/final-stage manufacturer would like to have side daylight openings rearward of the 1st row that would be subject to the standard, the distributor could design the body to have openings incorporating fixed advanced glazing that prevents passage of the FMVSS No. 226 headform. Such openings would not require side curtain air bag coverage. In short, final-stage manufacturers using a van-based or cutaway platform for work vehicles will be able to use the pass-through certification process and will have many options available to them when they use incomplete vehicles that have the FMVSS No. 226 system for the driver's and right front passenger's side windows.

Fourth, the standard itself only will apply in certain situations, and NTEA fails to provide details on how its members' later-stage manufacturing will be problematic. NHTSA has already applied FMVSS No. 226 only to side daylight openings within a certain distance of occupants' seats, has excluded from the standard's requirements side openings (windows) in a non-occupant area rear of the driver if there is a partition, has excluded side openings even if the partition has a door, has excluded walk-in vans and modified roof vehicles, and has designed the standard so that nothing in the work-performing area rear of a chassis-cab is subject to the standard. Given the design of this standard, NHTSA fails to see evidence of an actual problem.

NTEA believes that final-stage manufacturers will not be able to pass through certification to FMVSS No. 226 if they install a partition because an IVD to which NTEA refers limits the modifications a final-stage manufacturer may make to pass through certification to FMVSS No. 201.[18] We do not agree with the petitioner's assertions. IVDs pertaining to FMVSS No. 201 have been

[15] See Declaration of Stephen Latin-Kasper, Docket No. NHTSA–2009–0093–0022.

[16] The final rule also exempts final-stage manufacturers and alterers from having to phase in their compliance with the standard, whereas single-stage manufacturers are subject to a phase-in.

[17] NTEA states in its petition that partitions with breakaway features or side clearance (accommodating ejection mitigation side curtain air bags) conflict with a Federal Motor Carrier Safety Administration (FMCSA) requirement (49 CFR 393.114(d)) for ''penetration resistance'' that applies to vehicles over 4,536 kg (10,000 lb) GVWR. We do not agree that there is a conflict. We note first that the petitioner's argument does not seem related to its petition for reconsideration regarding the partition door. Second, the FMCSA requirement does not apply to work vehicles with a GVWR less than or equal to 4,536 kg (10,000 lb). Vehicles with a GVWR less than or equal to 4,536 kg (10,000 lb) are required to provide ejection mitigation protection under FMVSS No. 226 and SAFETEA–LU. Third, contrary to the NTEA assertion, the FMCSA requirement (49 CFR 393.114(d)) does not require vehicles to have partitions with penetration resistance, even for vehicles with a GVWR over 4,536 kg (10,000 lb). Instead, it specifies requirements that front end structures must meet if they are to be used as part of a cargo securement system. Last, final-stage manufacturers could use an incomplete vehicle configuration that has ejection mitigation side curtain air bags for the daylight openings adjacent to the front seats and complete the vehicle such that it does not have side daylight openings rearward of the front seats. This design can accommodate installation of a partition that is flush against the sides of the vehicle. As the Sixth Circuit observed in *NTEA* v. *NHTSA, supra,* the final-stage manufacturer can communicate to dealers of incomplete vehicles and to customers that they will only work on incomplete vehicles that have accommodating IVDs.

[18] The IVD states that the incomplete vehicle will conform to [FMVSS] No. 201, Section 6 (''Requirements for Upper Interior Components''), if in the process of completing the vehicle ''none of the following components, as provided by the incomplete vehicle manufacturer, are removed, relocated, altered, or modified either physically or chemically'': A, B, rear, or other pillar and trim, assist handles, seat belt ''D''-rings/adjusters and ''D''-ring covers; front or rear header and trim, side rails and trim; upper roof and trim.

workable in practice, as FMVSS No. 201 has applied to vehicles produced by final-stage manufacturers and alterers since September 1, 2006. NTEA does not provide one single instance of a final-stage manufacturer or alterer that has been unable to produce vehicles meeting the 201 standard. Further, the quoted IVD's limits on the modifications that may be made with regard to FMVSS No. 201 are not difficult for a final-stage manufacturer to follow to pass through the certification to FMVSS No. 201.[19] If this is an issue, NTEA should be able to provide examples. Final-stage manufacturers and alterers have to avoid modifying the components within the head protection zone regulated by FMVSS No. 201 or adding items to components in the zone.

NTEA believes that final-stage manufacturers will be restricted from installing partitions because a note in the quoted IVD states that, because the upper interior performance for cutaway products is affected by the rigidity of the back panel attachment, existing upper interior trim components may require recertification after attachment of a back panel. NTEA believes that, since incomplete vehicle manufacturers indicate that the addition of the body to a completed cab chassis might cause the cab to stiffen, ''even a partition that is designed so as not to interfere with deployment of the OEM [original equipment manufacturer] designed airbag [sic] system would be impermissible for pass-through compliance.''

This reasoning is not logical or persuasive. As the Court stated in *National Truck Equipment Association* v. *National Highway Traffic Safety Administration, supra,* ''NTEA's fears regarding too-restrictive IVDs appear to us unfounded.'' 711 F.3d at 672. The statement does not seem unduly restrictive, but simply cautionary that existing upper interior trim components ''may'' be affected by the completion of the vehicle. The statement in NTEA's quoted note appears to pertain to one of the paramount and central steps in manufacturing a vehicle in stages: Installing the vehicle body to the incomplete vehicle. This combination of the vehicle body to the vehicle chassis is a manufacturing process. It is reasonable for the IVD to caution that the upper interior performance may be affected by the rigidity of the back panel attachment. In contrast, installing a partition is much simpler than joining the vehicle body to the chassis. Installing a partition on the affected vehicles typically involves simply bolting or welding several fasteners in place at certain intervals. Since installing a partition is vastly easier and more straightforward than attaching the vehicle body to the chassis cab, the quoted IVD statements are not relevant to partitions, and do not show that partitions will be disallowed by the IVDs because of FMVSS No. 226.

Fifth, in line with what the agency has observed with other rules, we expect manufacturers to update body builder manuals to provide guidance to final-stage manufacturers on completing a vehicle to pass through certification to FMVSS No. 226. We believe the guidance will include instructions on installing partitions. We also continue to expect a dynamic marketplace with multiple manufacturers providing various vehicle configurations. As the Sixth Circuit observed in *NTEA* v. *NHTSA, supra,* final-stage manufacturers are free to communicate that they will only work on incomplete vehicles from first-stage manufacturers that have accommodating IVDs. 711 F.3d at 672.

NTEA's petition for reconsideration briefly mentioned alterers, but did not discuss these entities at length.[20] Alterers, by definition, perform work on an already certified vehicle. This means that the vehicle, prior to the alterer's work, is compliant with FMVSS No. 226. We believe there are options available to alterers to ''pass through'' the certification to FMVSS No. 226, depending on the modifications they make to the vehicle. Since the alterer would be modifying a vehicle already certified to FMVSS No. 226, the alterer would only have to take care not to alter the compliance of the vehicle with the FMVSS. There are partitions already available in the marketplace that are designed to be compatible with side curtain air bags.[21] An alterer may install such a partition without affecting the vehicles' conformance with FMVSS No. 226.

NTEA's petition criticizing IVDs and FMVSS No. 226 is not based on practical experience. Final-stage manufacturers have been using the pass-through method to certify compliance with various safety standards for decades; the method is workable and recognized by Congress.[22] ''After all, Congress intended for manufacturers to adjust to the regulatory demands of the industry rather than the other way around'' (*NTEA* v. *NHTSA,* 711 F.3d at 673–674). Furthermore, as the above discussion shows, all indications are that multi-stage manufacturers and alterers will be able to use pass-through certification to develop, produce, and offer for sale vehicles that provide the substantial ejection mitigation protections of FMVSS No. 226 to workforce personnel. The manufacture of these compliant vehicles accords with the Vehicle Safety Act and SAFETEA–LU.

2. School Buses

The final rule applies to passenger cars, and to multipurpose passenger vehicles, trucks and buses with a GVWR of 4,536 kg (10,000 lb) or less, except walk-in vans, ''modified roof'' vehicles (which are defined in the standard), convertibles, and certain vehicles with partitions. Because school buses are ''buses'' under our FMVSS definitions (49 CFR 571.3), FMVSS No. 226 applies to the vehicle type unless the vehicle is excluded by a specific exclusion in the standard.

Reconsideration Request

Daimler Truck requested that the final rule exclude school buses from the standard. The petitioner stated that school buses already are subject to ejection mitigation requirements in FMVSS No. 217. Daimler Truck believed that NHTSA has not

[19] To pass-through the certification to FMVSS No. 201, a final-stage manufacturer or alterer simply has to avoid modifying the components of the incomplete vehicle that are within the head protection zone regulated by FMVSS No. 201 and refrain from installing components in the zone. For altered vehicles and vehicles manufactured in two or more stages, the zone ends, if there is no partition, at a vertical plane 300 mm behind the seating reference point of the driver's designated seating position. If an altered vehicle or vehicle manufactured in two or more stages is equipped with a partition between the seating reference point of the driver's designated seating position and a vertical plane 300 mm behind the seating reference point, targets located rearward of the partition are excluded from FMVSS No. 201. These wide confines allow great flexibility in permitting final-stage manufacturers to pass through the certification to FMVSS No. 201.

[20] Under 49 CFR 567, the ''alteration'' of vehicles involves a person modifying a completed vehicle that has been previously certified, other than by the addition, substitution, or removal of readily attachable components, such as mirrors or tire and rim assemblies, or by minor finishing operations such as painting, before the first purchase of the vehicle other than for resale, in such a manner as may affect the conformity of the vehicle with one or more FMVSSs or the validity of the vehicle's stated weight ratings or vehicle type classification. The alterer is required to certify that the vehicle, as altered, conforms to all applicable FMVSSs affected by the alteration in effect in the month and year no earlier than the date of manufacture of the certified vehicle and no later than the date alterations were completed. 49 CFR 567.7.

[21] See, e.g., *http://www.troyproducts.com/news/Airbagann2.html* and *http://www.troyproducts.com/products/Partitions/FORD%20UTILITY%20VEHICLE%20CARGO%20PARTITION.pdf.* See also *http://www.pro-gard.com/QRC/partitions.asp.*

[22] See 49 U.S.C. 30115. See *NTEA,* 711 F.3d at 675 (''Congress in fact explicitly endorsed the pass-through certification regime in 2000'').

considered the interaction of ejection mitigation side curtain air bags with existing school bus safety features, including ''emergency exit window handle accessibility, emergency exit window unobstructed openings, wheelchair restraint anchorages, head impact zones, higher seat backs and side lift door glazed areas.''

Agency Response

We are denying this request because of a lack of support for it. We assume Daimler Truck's petition does not involve ''modified roof'' vehicles [23] and that it involves primarily school buses produced by a single manufacturer ''from the ground up.'' The petitioner provided no information or analysis as to why there would be an inherent conflict between the existing school bus standards and FMVSS No. 226, particularly for school buses that can be originally designed to meet the standard. NHTSA is not aware of inherent conflicts between ejection mitigation side curtain air bags and the safety features mentioned by the petitioner for a bus manufactured in a single stage. Therefore, at this time we have insufficient information to agree that excluding small school buses from applicability of FMVSS No. 226 is warranted. Applying the standard to a wide range of vehicles under 4,536 kg (10,000 lb) best implements the mandate of SAFETEA–LU than reducing the applicability of the standard.

c. Displacement Limit—Issue 1

The final rule specified that the ejection mitigation countermeasure must limit the linear travel of the impactor to not more than 100 mm beyond the location of the inside surface of the vehicle glazing. This displacement limit serves to control the size of any gaps forming between the countermeasure (e.g., the ejection mitigation side curtain air bag) and the window opening, thus reducing the potential for both partial and complete ejection of an occupant.

Reconsideration Request

Advocates states that the final rule ''fails to provide a sound basis for the excessive limit on excursion selected by the agency, and the rule does not establish a robust test procedure and requirements to mitigate partial and complete ejections.'' The petitioner believes that the 100 mm limit in FMVSS No. 217, FMVSS No. 206, and in architectural design codes is used to limit the width of gaps to prevent a person from passing through the opening, and should not be used for purposes of an excursion limit. The petitioner believes that a ''100 mm limit allows the occupant (headform) to pass beyond the plane of the window frame and technically be partially ejected.''

Advocates suggests a 50 mm excursion limit. The petitioner believes that a 50 mm limit results in a ''situation that effectively limits excursion and ejection.'' Advocates also states that data in the Final Regulatory Impact Analysis accompanying the final rule show that 25 percent of the individual tests conducted resulted in excursions of no more than 50 mm, while a 100 mm limit was met by more with 47 percent of tests.

Agency Response

We are denying the petition to reduce the performance requirement in the final rule to 50 mm.

To meet the 100 mm requirement, ejection mitigation side curtain air bags must inflate rapidly enough to be protective for ejection mitigation purposes 1.5 seconds after deployment and maintain inflation so that they are protective 6 seconds after inflation. Moreover, since the side curtain air bags will likely be installed to meet both FMVSS No. 214, ''Side impact protection,'' and FMVSS No. 226, if a side impact is involved, the curtain air bags will inflate within milliseconds of the side crash. We recognize that there is some risk of external contact generally with any kind of displacement limit. However, this risk is greatly mitigated by limiting the displacement to 100 mm. Also, even if there is contact, if the occupant's head or part of the body is behind a curtain, the inflated curtain will provide impact protection from the zero displacement plane to 100 mm past the plane. While that benefit cannot be quantified, the cushioning would mitigate some of the risk of injury from external contact.

Moreover, even if head contact with a surface may occur, and even in the absence of cushioning, as we explained in the final rule, the 100 mm limit achieves the appropriate balance between stringency and practicability. Advocates believes that test data presented in the final rule preamble indicate that 25 percent of the tests conducted resulted in displacement of the headform of less than 50 mm beyond the inside surface of the glazing, and that 47 percent of the test results had displacements under 100 mm. The petitioner believes that by setting the displacement limit at 100 mm, NHTSA ''is only aiming for the 'average' capability of current airbag [sic] technology.''

It was not clear from the petition how Advocates analyzed the data so we attempted to discern what the petitioner meant.[24] The petitioner's assessment is not persuasive. First, we caution that the vast majority of the data was generated in tests using an impactor whose frictional and deflection characteristics differed from the updated specifications set forth in the final rule. In general, tests with the new impactor resulted in greater displacement. The average increase in displacement for the new impactor was 22 mm across all target locations and 31 mm at target A1.

Second and more importantly, the data to which the petitioner refers do not demonstrate the practicability of a 50 mm displacement limit. Rather than evaluating only the data for average displacement across all targets (which we assume the petitioner did), we also analyzed the data with regard to the more challenging target, A1. The data show that only 2 percent [1/55] of tests at target A1 were less than or equal to 50 mm and only 24 percent [13/55] of tests at target A1 were less than or equal to 100 mm. In addition, only one of the three vehicles tested with the new impactor had 100 mm or less displacement at every target location tested under the final rule conditions and no vehicle met a 50 mm criterion at every target location.

In the January 19, 2011 final rule, NHTSA estimated that adopting FMVSS No. 226 with a 100 mm displacement criterion would achieve tremendous

[23] ''Modified roof'' is defined in S3 of the standard. SBMTC submitted a letter asking for confirmation that ''10,000 pound or less GVWR Type-A buses and school buses constructed upon a cutaway chassis, of which the original incomplete vehicle roof has been modified, are excluded from the application of FMVSS 226 by virtue of section 2 and 3 of this standard . . .'' We assume that when SBMTC refers to the original incomplete vehicle roof as having been ''modified,'' the roof was removed in part or in total and replaced in part or in whole. Our answer is yes, the school buses are excluded from FMVSS No. 226 as ''modified roof'' vehicles. The final rule excluded vehicles whose original roofs were modified in part or in total because of the likelihood that the original curtain air bag mounted in the header above the door would be affected by such modification. Thus, we adopted the exclusion to be sensitive to possible practicability problems that could arise if the roof were modified by a later-stage manufacturer or alterer.

[24] We assume Advocates performed its analysis of the data in Tables 10–18 of the final rule preamble. We note that the numbers in each row of the data may represent the average result from several tests at the same condition. In addition, some tests with differing laminate breakage methods were combined. It is unclear if the Advocates analysis used testing at 24 km/h, which is not part of the final rule. We performed an analysis excluding the 24 km/h data. Fifty-nine (59) percent [209/356] of the results in Tables, 11, 12, 14, 15, 17 and 18 were less than or equal to 100 mm and 31 percent [112/356] were less than or equal to 50 mm.

benefits at reasonable costs. We estimated that the rule will save 373 lives and prevent 476 serious injuries per year, at a cost of approximately $31 per vehicle. The final rule provided manufacturers approximately two and one-half years of lead time to begin meeting the standard. This lead time challenged manufacturers to begin installing the life-saving technology as quickly as possible.

Even assuming that a displacement limit of 50 mm were practicable, it would likely be practicable only with more lead time and possibly with significant changes to the countermeasure. The added lead time would have a corresponding nonattainment of the benefit that could have been achieved by a shorter implementation of the standard. Moreover, we must emphasize that there is no scientific basis for correlating various displacement values with quantifiable benefits. No one can say that reducing the displacement limit by 50 percent will reduce ejection or side impact fatalities and injuries by a corresponding amount. On the other hand, although the incremental benefit of a 50 mm limit cannot be quantified, there will be a toll in terms of lives lost due to a delay in implementation of the standard. The agency believes a 50 mm limit does not warrant delaying the benefits of ejection mitigation side curtain air bags, especially when it cannot be shown whether any benefits would result from a 50 mm displacement limit.

A 50 mm limit would also likely entail use of advanced glazing to meet the requirement at side windows. In the FRIA, we estimated that there would be a $15 incremental cost difference between tempered glass and laminated advanced glazing for a standard-size side window in the first or [second] row. Thus, for a two-row vehicle the total incremental cost would be $60. This cost for advanced glazing would have to be added to the cost of the curtain bag, since, under the final rule, a system with movable advanced glazing alone would not be able to perform to the level required for the standard. In comparison, the agency determined that the incremental cost of meeting the final rule with only curtain air bags will be $31 dollars per vehicle. The cost per equivalent fatality of a system comprised of a partial curtain in combination with advanced laminated glazing was twice that of a system utilizing only a curtain. We cannot agree that this cost is reasonable, given the absence of any quantifiable benefit associated with the 50 mm displacement limit.

Lastly, we believe the 100 mm limit demands a high degree of performance. It may be helpful to think of the performance requirement as it would be brought to bear in the real world. During and after impact by the head and upper torso of a mid-size adult male at a velocity present in fatal rollovers, the curtain or other safety countermeasure must withstand the force generated by this sizable mass and restrain the mass within 100 mm of the glazing surface at both the beginning and end stages of a multi-roll crash. If gaps form between the countermeasure (the curtain) covering the daylight opening, the displacement must be contained to 100 mm. The FMVSS No. 226 test is not one in which we simply deploy a curtain and see if there are exposed 100 mm gaps between the curtain and the window frame. Bear in mind that the 100 mm limit is assessed when the countermeasure is struck by the moving massive 18 kg (40 lb) headform. The 100 mm displacement limit ensures that ejection mitigation side curtain air bags will be sturdy, robust, and highly effective in reducing partial and complete ejections.

c. Displacement Limit—Issue 2

The final rule specified that the impactor mass is propelled at points around the window's perimeter. To evaluate the performance of a curtain to fully cover potential ejection routes, the impactor targets four specific locations per side window adjacent to the first three rows of the vehicle. NHTSA determined that impacting four targets around the perimeter of the opening assures that the window will be covered by the countermeasure (curtain), while imposing a reasonable test burden.

Reconsideration Request

Advocates believes that FMVSS No. 226's test methodology allows manufacturers to have ''minimal designs.'' Advocates asks that we include language in the final rule to ''[i]nclude testing of all openings present between and within a tested countermeasure and the appropriate daylight opening, both after deployment and before testing and at the conclusion of testing, such that openings are limited to less than 100 mm and resist the passage of a similarly sized object under an appropriately determined level of force so as to ensure the retention of occupants within the vehicle cabin.'' The testing would be ''similar to the testing processes noted by the agency in FMVSS 206 and FMVSS 217.''

Agency Response

We are denying the petition to introduce a new test to determine countermeasure resistance to passage of a 100 mm object. The petitioner provided insufficient information regarding the need for a new test or the suggested test methodology.

We do not agree there is a need for a new test. In the final rule preamble, the agency responded to a similar suggestion, from glazing manufacturers about a sphere test, although the suggested object dimension was 40 mm. 76 FR at 3249, col. 2. In the preamble, we explained our reasons for disagreeing with the suggestion. Those reasons apply also to Advocates' suggestion and we deny the petitioner's suggestion for the same reasons, which are briefly summarized below. (For simplicity, we refer to the petitioner's suggestion as a sphere test.)

First, we see no safety need for the test. We cannot conclude that ejections that would not be prevented by the primary 100 mm displacement requirement would be prevented by a secondary requirement to ''push an object'' through any gaps in the curtain. Second, the sphere test is not appropriate for vehicles with only side curtain air bags and no advanced glazing, given that there is a time dependence associated with a curtain's ejection mitigation performance. Once deployed, the pressure in the air bag continuously decreases. The 16 km/h test is done at 6 seconds to assure that the pressure does not decrease too quickly. The sphere test could not be able to be done after the 6-second impact in any timeframe that is related to rollover and side impact ejections. Third, the sphere test would indirectly require installation of advanced glazing. As discussed in the final rule, the costs associated with advanced glazing installations at the side windows are substantial in comparison to a system only using rollover curtains, with no quantifiable benefit.

We also do not agree that ''minimal designs'' will result of the rule specifying that designated targets are tested rather than ''all openings.'' In research leading to the development of FMVSS No. 226, we found that ''full window opening coverage was key to the effectiveness of the curtain in preventing ejection.'' 76 FR at 3223. To ensure that the entire window opening is covered, we developed the standard's test procedure such that the impactor mass is propelled at specific targets around the window's perimeter. This testing is objective and imposes a reasonable test burden. The

performance test of FMVSS No. 226 attains one of the principles underlying the standard, which is to ensure that ejection mitigation side curtain air bags fully cover the window opening.

In addition, the petitioner provided no information about a test methodology for the sphere test, such as whether the sphere is to be pushed in multiple orientations with respect to the window, pushed in those orientations in the 6-second time frame, the appropriate push force, or the real world relevance of the orientation of the push force. The request lacks the substantive information that would enable the agency to consider it to a greater degree.

For the above reasons, Advocates' petition is denied.

IV. Response to Petitions Regarding Technical Issues

The final rule included technical elements relating to the test procedure NHTSA will use to assess a vehicle's compliance with the standard. NHTSA received petitions for reconsideration related to various technical elements pertaining to, among other things: Procedures for determining target locations, identifying primary target locations and for adjusting the targets. There were a number of requests relating to provisions in the standard for testing glazing and preparing glazing for testing. Petitions related to technical issues are discussed below.

V. Determination of Impact Target Locations—Boundary of Target Locations

a. Rearmost Limit of the Offset Line

S5.2.1.2 of the standard has procedures for locating target locations in a daylight opening. The procedures define the testing area of the opening. The rearmost limit of the testing area is determined in part by identifying the transverse vertical vehicle plane located at the following distances behind the SgRP with the seats adjusted to their rearmost normal riding or driving position:

—For a vehicle with fewer than 3 rows: 1,400 mm behind the rearmost SgRP;

—For a vehicle with 3 or more rows: 600 mm behind the 3rd row SgRP.

If the ''offset line'' of a particular daylight opening is rearward of the transverse vertical vehicle plane specified above, the transverse vertical vehicle plane defines the rearward edge of the offset line for the purposes of determining target locations. (S5.2.1.2(a) and (b).)

In the final rule, the agency extended the rearward location of the transverse vertical vehicle plane beyond that proposed in the NPRM for vehicles with 1 or 2 rows of seating. The NPRM had proposed that the rearward limit of the plane would be 600 mm behind the SgRP of a seat in the 2nd row for a vehicle with 2 rows, and 600 mm behind the SgRP of a seat in the 1st row for a vehicle with 1 row. We reassessed the proposal after reading various comments and considering that all or part of the cargo area daylight opening rearward of that 1st or 2nd row would be excluded from coverage under the NPRM's provisions. Also, we reexamined the proposal after realizing from our field data analysis for the final rule that cargo area window ejections in the area that would have been the third row had there been a third row of seats were 0.5 percent of all ejection fatalities, which exceeded 3rd row occupant fatalities (0.3 percent).[25]

Accordingly, for the final rule, the agency decided that for vehicles with only 1 or 2 rows of seating, the rearward limit would be increased from the 600 mm distance to 1,400 mm, measured from the SgRP of the seat in the last row.[26] The window openings subject to testing under the 1,400 mm limit are those that would have been adjacent to a third row seat had the vehicle had a third row. By increasing the distance to 1,400 mm, more of the glazing area in cargo area behind the 1st or 2nd row will provide ejection mitigation protection.

Reconsideration Request

The Alliance requests that NHTSA reconsider its decision to increase the rearward limit to 1,400 mm behind the SgRP. The petitioner states that extending the coverage area to 1,400 mm may have ''possible deleterious effects.'' The petitioner states that a partition in the 1,400 mm cargo area behind the 1st or 2nd row could interfere with a curtain air bag, resulting in increased air bag pressure or tears which could ''negatively affect both out-of-position [OOP] performance as well as protection for properly positioned occupants during a side impact.'' The Alliance believes that the risk to properly belted occupants would increase to protect a small number of unbelted occupants and disagrees with that outcome. Further, the petitioner states that the new requirement ''would necessitate a significant redesign of the roof rail airbag [sic] systems in many vehicles'' and that meeting FMVSS No. 226 in conjunction with FMVSS No. 214 and OOP guidelines ''would present a major engineering integration challenge with minimal benefits.''

Agency Response

We are denying the Alliance's petition to reduce the rearward extent of the daylight opening for vehicles with 1 or 2 rows from 1,400 mm to 600 mm.

We do not agree with the Alliance's assertions that the risks associated with extending window coverage to the cargo area outweigh the potential benefits. By extending the daylight opening into the cargo area of 1 and 2 row vehicles, the agency is covering an ejection route that accounts for the loss of 52 lives a year. The FRIA estimated that coverage of the cargo area window openings has a similar level of cost effectiveness as covering the 3rd row windows. The petitioner referred to possible OOP risks and tearing risks from extending daylight opening coverage to the cargo area, but the references were highly speculative and completely unsupported.

With regard to the petitioner's arguments about the potential for obstruction to air bag deployment from cargo area partitions, the arguments are altogether inapplicable to partitions installed as original equipment by a vehicle manufacturer. If the vehicle manufacturer provides a partition for the vehicle, the curtain air bags could be installed just for the rows in front of the partition. Regarding aftermarket partitions, they could be designed with curtain air bag deployment in mind. The partition could have a clearance for the curtain, or have breakaway features. We are aware of several companies marketing side curtain air bag compatible cargo barriers.[27] At this time, we believe new partition designs will be developed to be compatible with ejection mitigation side curtain air bags as market demand develops for such partitions. Speculation about the futility of aftermarket partitions evolving does not convince us to overlook the benefits that are acquired by extending coverage to the cargo area.

The Alliance asserts that the extension of the rearward daylight opening will force the redesign of curtain air bags, which may slow their deployment time. In addition, it refers to a ''major engineering integration challenge'' associated with the 1,400 mm limit.

The agency addressed these points in the final rule preamble and the

[25] We also realized after studying several Special Crash Investigation cases that unbelted occupants were ejected through window openings behind the row in which they were seated.

[26] Under the final rule, a 3-row vehicle is still only required to meet the 600 mm value.

[27] Pro-gard Products LLC (*www.progard.com*). Setina Manufacturing Co., Inc. (*www.setina.com*). Troy Sheet Metal Works, Inc. (*www.troyproducts.com*).

petitioner has not provided any information that leads us to change our position. We pointed out in the preamble that vehicles are already being produced that have side air bag curtains covering windows in rows 1, 2 and 3 (e.g., the MY 2005 Honda Odyssey, MY 2006 Mercury Monterey, MY 2007 Chevrolet Tahoe, MY 2007 Ford Expedition, MY 2007 Jeep Commander, MY 2008 Dodge Caravan, MY 2008 Ford Taurus X, and MY 2008 Toyota Highlander). The designs typically use a single curtain tethered at the A- and D-pillars. (See 76 FR at 3263–3264). We pointed out that, because these designs provide three rows of coverage, covering the cargo area behind the 1st or 2nd row of a vehicle up to window openings adjacent to where a 3rd row would have been is no more of a technical challenge than manufacturers face in covering all openings adjacent to the 3rd row for vehicles with three rows.

Manufacturers have developed and are availing themselves of air bag systems that extend coverage into the 3rd row area of the cargo area. The petitioner has not substantiated its claim that there are technical challenges in extending coverage to the cargo area that manufacturers cannot overcome.

b. Grab Handles

S6.3 of FMVSS No. 226 specifies that, during targeting and testing, NHTSA will remove or adjust the vehicle's steering wheel, steering column, seats, grab handles and exterior mirrors to facilitate testing and/or provide an unobstructed path for headform travel through and beyond the vehicle. These items are not included when the daylight opening is defined and when the daylight opening is tested because the items are unlikely to have a positive effect in impeding occupant ejection and/or could restrict the travel of the impactor headform.

Reconsideration Request

In its petition for reconsideration, the Alliance disagrees with the agency's decision in S6.3 to remove or adjust grab handles. The petitioner states that grab handles located inboard of the air bag deployment path are commonly attached through the headliner or A-pillar garnish trim to the vehicle structure. The petitioner states:

''Removing these handles can change the headliner and trim attachment structure and bending characteristics. Changing the bending characteristics of the headliner can lead to curtain airbags [sic] not deploying as designed and there could be unintended interactions with the testing device.'' The Alliance also states that, for handles located outboard of the air bag deployment path, the grab handles may also function as a reaction surface for curtain air bags. ''If the handles were to be removed, the deployment characteristics and reaction surface of the airbag [sic] would be changed from the design intent. In addition, the surface of the pillar would be changed, which could lead to exposed mounting brackets and rough surfaces that can lead to tearing of the airbag [sic] and/or a change of the deployment characteristics.''

Agency Response

There are several parts to our response.

A. We are denying the request to keep grab handles in place when determining the daylight opening. We affirm our conclusion in the final rule preamble that grab handles are unlikely to ''contribute anything positive to ejection mitigation.'' That is, in a rollover, the grab handle is unlikely to have any effect mitigating the likelihood of ejection since occupants will move toward the daylight opening from many different angles. Given that the presence of the grab handle is unlikely to lower the likelihood an occupant would be ejected from the opening (e.g., it does not lower the chance of ejection by blocking the opening), it would not make sense for the test procedure to allow the grab handle to define the opening being tested.

Moreover, we are concerned that the requested amendment would create a means to manipulate the test requirements, to enable designers to move the impactor away from weak points in the ejection mitigation countermeasure in a false way. Figure 1, below, depicts two renditions of a 1st row daylight opening. The illustration on the left shows the opening without a grab handle; the other shows a grab handle attached to the A-pillar. For convenience, we used an approximation of the target outline, rather than the exact cubic equation prescribed in the final rule. The target outline height and width are dimensionally correct relative to each other.

Assume that the grab handle has a length and width of 52 mm x 191 mm (2 in. x 7.5 in.). Also shown in each of the drawings and listed in Table 9 is the x-direction (longitudinal) distance from the front edge of the daylight opening to the center of each target.

This graphical presentation shows that by adding a grab handle that projects into the daylight opening by about 50 mm, target point A1 is pushed rearward 53 mm [170 mm − 117 mm] away from the lower front corner of the opening. Similarly, target points A2 and A3 are pushed rearward by 17 mm [526 mm − 509 mm] and 35 mm [348 mm − 313 mm] from the front of the daylight opening, respectively. These changes would be a function of the shape, size and location of the grab handle.

We know from our testing that target location A1 is the most challenging of the 1st row targets and that curtain coverage at the base of the A-pillar has been deficient for most curtain designs. This is followed by A3 and A2, in degree of difficulty.

Table 8 shows the average and standard deviation of displacement for the 20 km/h-1.5 second impact for all 1st row target locations for all tests conducted by NHTSA.[28] Targets A1 and A2 have an average displacement of 140 mm and 112 mm, respectively. Thus, moving target A1 away from the base of the A-pillar (by 53 mm, in our example, due to the grab handle) would likely reduce the displacement of the impactor.

Similarly, Targets A3 and A4 have an average displacement of 132 mm and 15 mm, respectively. Moving target A3 towards the A4 target (by 35 mm, in our example) would likely reduce the displacement of the impactor at the A3 location. Finally, the original A2 target is moved rearwards toward the B-pillar (by 17 mm, in our example). Decreasing the proximity to the B-pillar may add support to the curtain, which will tend to reduce the impactor displacement.

Reducing impactor displacement by means that would have real-world effectiveness in limiting occupant ejection is wholly appropriate. However, the Figure 1 example shows that by adding a grab handle to the A-pillar of a 1st row window opening, the stringency of the standard may be reduced by the presence of an item that, in a real-world rollover, is not likely to have an actual effect on mitigating full and partial occupant ejections. The stringency of the standard would be reduced by an artifact of the test procedure. For the above reasons, the agency declines the petitioner's suggestion to modify the determination of the daylight opening.

[28] These data can be found in Table 11 of the final rule. See 76 FR 3228.

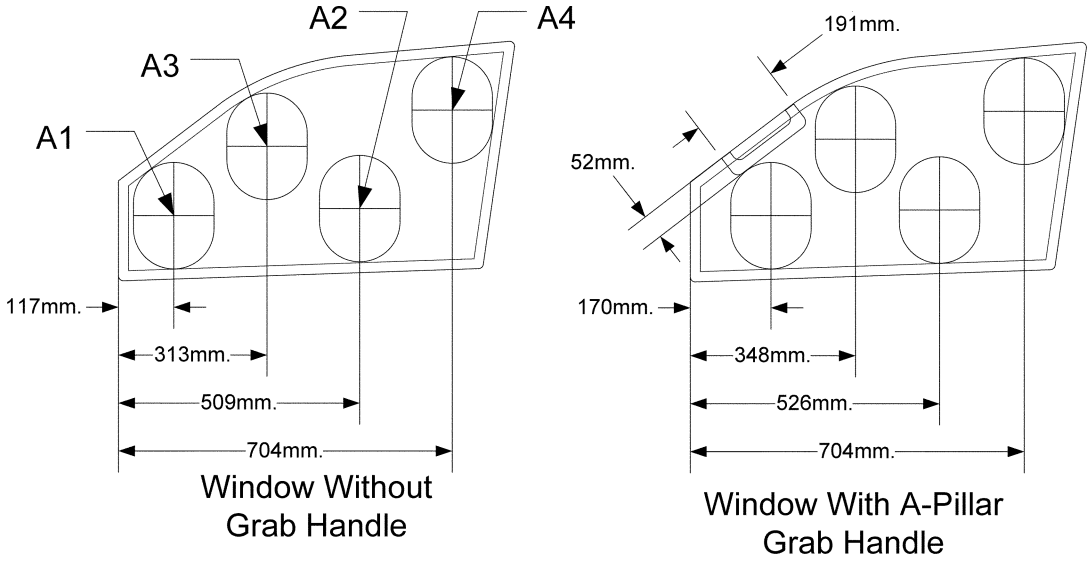

Figure 1 – Effect of a Grab Handle on the Target Locations of a 1st Row Window

TABLE 8—TARGET X (LONGITUDINAL) LOCATION (IN MILLIMETERS) REFERENCED TO THE FRONT EDGE OF THE DAYLIGHT OPENING

Handle location	A1	A2	A3	A4
No Handle	117	509	313	704
A-Pillar	170	526	348	704

TABLE 9—AVERAGE AND STANDARD DEVIATION OF IMPACTOR DISPLACEMENT (MM) FOR FRONT ROW WINDOW, 20 KM/H IMPACT, 1.5 SECOND DELAY

A1	A2	A3	A4
140 ± 36.5	112 ± 55.7	132 ± 56.7	15 ± 39.0

B. Subject to the discussion below, we are denying the request to keep grab handles in place during testing. The Alliance provided no data or information supporting a finding that removal of the grab handles affects the performance of the air bag to an extent that outweighs the agency's interest in ensuring unobstructed passage of the headform in a test. However, we are sensitive to when and how the grab handle should be removed, as discussed below.

C. After the final rule was published, ASC asked the agency about grab handles that are molded into the trim panel and how they are to be removed.[29] Such grab handles are not readily removable by removing fasteners. ASC asked whether such grab handles would be sawn-off or would the entire panel be removed. It recommended the former, with accommodation for taping over any remaining rough edges to avoid damaging the curtain air bag during deployment. It preferred the former since, ASC stated, the presence of the trim panel may provide a reaction surface for the air bag and may cover internal structure not intended to contact the air bag. ASC also requested guidance on when a grab handle should be removed, e.g., would it be removed only during a test in which it would obstruct impactor travel or would it be removed in the testing of other target locations?

Although we have denied the Alliance's request to keep grab handles in place during testing, grab handles will only be removed if they obstruct the impactors travel to a specific target we are testing. We also concur that grab handles should be removed with minimal disturbance to the trim. Overall, our view is that, unless there is reason to the contrary, testing a vehicle in as near the as-manufactured condition as practicable better ensures that the performance we witness in the compliance laboratory is representative of the performance of the vehicle in the real world. For grab handles, we have determined there is reason to remove the component (and the other items listed in S6.3) due to potential interference with the impactor. However, we concur that the grab handle should be removed with minimal disturbance to the trim.

We recognize there is reason to have different methods of removal depending on the handle design. Removing fasteners is an easy and preferred way of removing a grab handle, provided that there are distinct fasteners attaching the handle and that removal of the grab handle does not affect the integrity of the trim. In the situation of a handle molded into the trim panel without dedicated fasteners, cutting away the portion of the handle obstructing the path of the headform is a way to remove the grab handle without degrading the integrity of the trim. Thus, our answer is we will remove the grab handle by removing fasteners if there are distinct fasteners attaching the handle. If there are no distinct fasteners attaching the grab handle (e.g., if a grab handle is

[29] See April 2, 2012 email from Douglas Stein, Chair of the ASC Rollover and Ejection Mitigation Committee, to NHTSA staff, a copy of which is in the docket for today's final rule.

molded into the trim panel without showing dedicated fasteners), we will cut away the portion of the handle that impedes into the daylight opening.

c. Removal of Components During Targeting

S6.2 of FMVSS No. 226 allows some vehicle doors to be opened or removed during testing. S6.3 provides, ''During targeting and testing, the steering wheel, steering column, seats, grab handles, and exterior mirrors may be removed from the vehicle or adjusted to facilitate testing and/or provide an unobstructed path for the headform travel through and beyond the vehicle.'' S6.4 states that, during targeting and testing, interior vehicle components and vehicle structures other than those specified in S6.2 and S6.3 may be removed or adjusted to the extent necessary to allow positioning of the ejection propulsion mechanism and to provide an unobstructed path for headform travel through and beyond the vehicle.

Petition for Reconsideration

The Alliance believes that ''apart from weather stripping and seats . . . nothing should be removed during the targeting procedure. Items such as instrument panels may fall within 100 mm of the inside surface of the glass, and therefore define part of the daylight opening. Section X(e)(1)(i) of the preamble states that NHTSA intends to include interior components within 100 mm of the glass because they 'could have a positive effect on ejection mitigation.' ''

Agency Response

We do not agree generally with the view that ''nothing should be removed.'' However, we note that the petitioner's request is somewhat unclear and the petitioner does not elaborate on its views. The following discussion on our part might help clarify matters. The petitioner refers to an instrument panel within 100 mm of the inside surface of the glazing. This portion of the instrument panel would not be removed since it defines a portion of the daylight opening. That is, the daylight opening would be prescribed around this portion of the instrument panel. Since no target would be placed over this portion of the instrument panel, no restriction of the impactor would occur and no removal of the component would be necessary.[30]

If, however, the petitioner is referring to some other part of the instrument panel not within 100 mm of the inside surface of the glazing which obstructed the ejection propulsion mechanism's path or prevented its positioning, that portion could be removed under S6.4. We do not agree with the approach of having to keep vehicle interior components (other than those within the region 25 mm outboard and 100 mm inboard of the glazing surface) in place for targeting and testing. Removing the objects would help ensure that the testing can be performed, as removal might be needed to allow positioning of the ejection propulsion mechanism or to provide an unobstructed path for headform travel through and beyond the vehicle. Further, removal of these objects would not degrade the ejection mitigation features of the vehicle, since the objects provide no impediment to ejection in the real world (76 FR at 3266). Thus, the request is denied.

VI. Primary Target Locations

a. Determination of the Geometric Center of the Daylight Opening

As part of the procedure that delineates the target locations, the side daylight opening being tested is divided into four quadrants by passing a vertical line and a horizontal line through the geometric center of the daylight opening (S5.2.3).

In its petition for reconsideration, the Alliance expresses concern that calculation of the geometric center of some daylight openings can be very complex and that different test facilities could identify different points as the ''geometric center.'' The petitioner requests that the agency ''allow manufacturers to submit CAD geometric center coordinate data for each side daylight opening, which would then be utilized by the agency's test laboratories when conducting compliance tests.'' The petitioner states that ''this approach is similar to the test procedure for S22.4.1.2 of FMVSS No. 208, [Occupant crash protection,] with respect to the identification of the volumetric center of an inflated air bag.''

Agency Response

It is unclear whether the petitioner is suggesting NHTSA should use or must use manufacturer-submitted computer aided design (CAD) data for locating the geometric center of the daylight opening. As to the former, as a general practice in compliance testing, the agency typically asks for a variety of information from vehicle manufacturers to compare to our determination of pre-test parameters. Examples of these are the design seat back angle and H-point used in FMVSS Nos. 202a, ''Head restraints,'' and in FMVSS No. 208. It is important to note that NHTSA reserves the ability to independently determine these pre-test parameters on the vehicle being tested, notwithstanding the manufacturer input. The agency is not obligated to rely on the information submitted by the manufacturer of the tested vehicle. We may have good reason to disagree with it.

The Alliance specifically references the example of S22.4.1.2 of FMVSS No. 208, where it is necessary to determine the geometric center of a folded and statically inflated air bag. This is a situation where the manufacturer-supplied information simplifies the compliance testing process. When S22.4.1.2 was adopted in FMVSS No. 208, we stated that ''the agency anticipates that manufacturers will provide the target point based on their computer based drawings of the air bag system and the surrounding structure.''[31] Nonetheless, under FMVSS No. 208, the agency has the ability to check this information using methods we deem appropriate. (For instance, the information could be obtained using 3D laser scanning.)

We disagree with the implication that it would be inappropriate if we not obtain the manufacturer CAD data. The pre-test parameter of the geometric center of the window opening is not difficult to determine. We have had no difficulty in efficiently and accurately determining the location of this point in space. We have digitized the actual daylight opening of the vehicle under test by use of a FaroArm®. Once digitized, any number of CAD programs can be used to determine the location of the geometric center with respect to the digitized opening or any other fiduciary mark or reference point on the vehicle. NHTSA may or may not ask for CAD data from the manufacturers to assist us in determining the parameter. It is and should be the agency's prerogative to choose whether to ask for the manufacturer's data.

If the petitioner is asking the latter suggestion, we decline the suggestion that the standard should require NHTSA to use the manufacturer-submitted CAD data. For one thing, we seek to determine the actual geometric center of the daylight opening of the particular vehicle being tested to determine the compliance of the vehicle as produced, rather than use CAD data that may be based on the vehicle as designed. The Vehicle Safety Act requires the compliance of new vehicles as they are

[30] One of the reasons behind the final rule's expanding the inboard distance to be considered when defining the daylight opening, from 50 mm to 100 mm, was the conclusion that this distance would ''be sufficient to encompass interior borders and other components around the daylight opening that might not be easily removed and whose removal may have an unknown effect on the performance of the countermeasure.'' (76 FR 3265.)

[31] 68 FR 68186.

sold, not simply as they are designed. Testing vehicles as manufactured evaluates noncompliances that could occur during the manufacturing process, due to, for example, unanticipated manufacturing problems or to poor quality control. Thus, there are good reasons for NHTSA to test vehicles for compliance ''as manufactured,'' not as designed.

Although some variation between the actual geometric center and that obtained from CAD data could occur based on the build variability of the vehicle, we have found in our testing that small variations in the location of the geometric center has had no effect on the primary targets selected and, therefore, do not affect the final target locations. Nonetheless, for the reason stated above, we prefer that the geometric center be determined from the actual vehicle under test as opposed to CAD drawings of the vehicle.

Furthermore, although we find merit in having manufacturers submit data on various vehicle parameters to increase the efficiency of our test program (obtaining such information enables us to better understand the assumptions manufacturers used in their certification of compliance), we believe that the agency should retain the ability to determine on our own how a compliance test will be conducted on the test vehicle. In that way, we avoid a situation in which we are dependent on manufacturer data with which we do not agree, or which may have been generated using substandard means.

For the above reasons, the petitioner's request is denied.

b. Targeting Large Radius Windows

The final rule regulatory text, at S5.2.2, *Preliminary target locations,* specifies the manner in which primary target locations within the daylight opening are identified. S5.2.2(b) states: ''Place targets at any location inside the offset-line where the target is tangent to within ±2 mm of the offset-line at just two or three points (see Figure 2) . . .'' S5.2.3.3 provides that if there is a primary quadrant that does not contain a target center, the target center closest to the primary quadrant outline is the primary target.

Clarification Request

ASC asks for clarification of the targeting procedure for a window opening with a large radius, regarding the forward-upper quadrant of the daylight opening. It asks how NHTSA will position a target at the ''corner'' location(s) for this area of the window (top image (labeled ''1'') in Figure 2, below.). ASC states that if the procedure is followed as written, the target would only contact the daylight opening offset-line at one point and, therefore, this quadrant would not contain a target. ASC states that S5.2.3.3 then specifies that the forward lower target would become the new primary target (image labeled ''2'' in Figure 2). ASC states that continuing with the specified test procedure, the selected targets would be as illustrated in the image labeled ''3'' in Figure 2. ASC believes that NHTSA intended the targets to appear as shown in the image labeled ''4'' rather than image 3 and asks for clarification of the procedure to achieve the target layout shown in image 4.

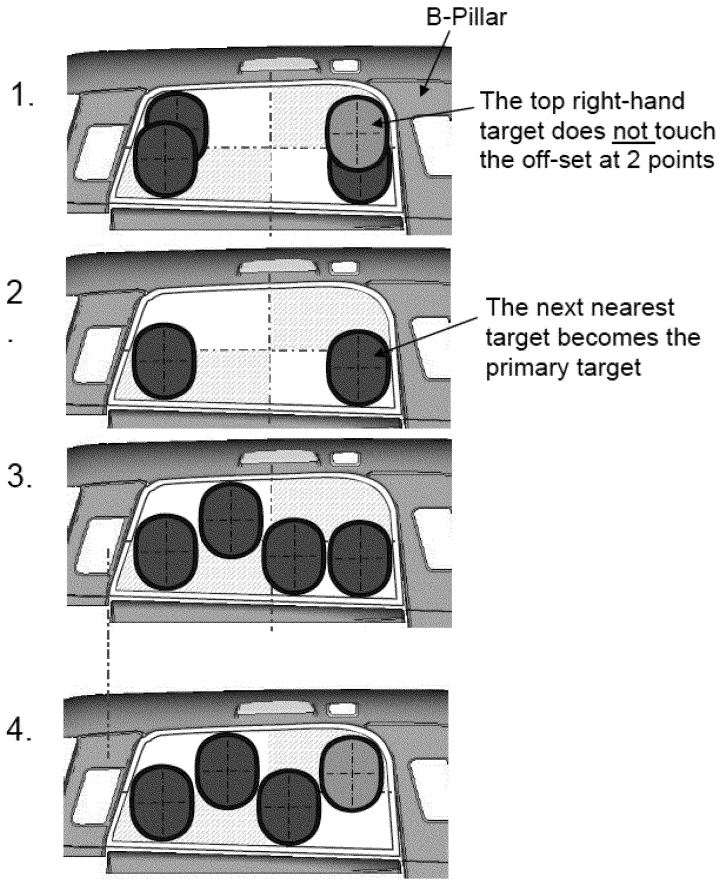

Figure 2 – Graphic provided by ASC, showing a daylight opening with no top right-hand corner

Agency Response

ASC is correct that the procedure of S5.2.3 results in the layout shown in image 3 in Figure 2. However, it was not our intent that the test procedure must specify placement of a target in the forward-upper quadrant of the window opening no matter the shape of the daylight opening. We believe that the absence of a corner in the forward-upper quadrant is not typical, so the final placement of the targets in the example shown is also not typical. NHTSA has not encountered a situation like this in any vehicle we tested.

In general, the test procedure was developed to achieve, to the extent possible, the goal of requiring full window coverage by the ejection countermeasure, while using an objective and repeatable methodology. In developing the test procedure, we considered the many potential sizes and shapes of windows. The number of potential window design variants is great, however, so the end result is that some window shapes may result in a target distribution that is not as dispersed as it might be with other window shapes. Nonetheless, in developing the procedure, we realized that a primary quadrant may not have a target located inside it, so we drafted the procedure to address this eventuality in S5.2.3.3.

We do not believe that the example given by ASC shows a problem that warrants a change to the test procedure. The forward-upper quadrant is an area of the daylight opening where a curtain air bag would be well supported by the header attachment and the B-pillar. These features should contribute to the curtain meeting FMVSS No. 226's displacement limit, so the absence of a target in this area is not a great concern. In addition, a change or addition to the procedure to address this issue could add complexity to the test procedure, even though the addition to the procedure would rarely need to be invoked. For these reasons, we decline to revise the procedure to achieve the layout shown in image 4.

VII. Target Adjustment

a. Coordinate System

The final rule defines the targets using the headform's local coordinate system. The term ''target'' is defined as the x-z plane projection of the headform face shown in Figure 1 of the final rule's regulatory text. Figure 1 of the regulatory text shows the headform's local coordinate system. The initial headform x, y and z axes are to align with the vehicle longitudinal, transverse and vertical axes, respectively. Under S5.6.1, the ''zero displacement plane'' is measured with the headform touching the inside surface of the window, showing that the headform y-axis is pointing outward.

The x-z coordinate system is used in the final rule in determining target location. Among other provisions, the final rule included provisions to account for possible overlapping of the targets (see S5.2.5.1.1) and elimination if appropriate. The rule specifies that after the primary and secondary targets are established, the horizontal and vertical distances between target centers are checked in a specified order. If the horizontal distance between the targets is less than 170 mm and the vertical distance is less than 135 mm, one of the targets is eliminated.

See S5.2.5.1.1, *Target elimination,* in the regulatory text of the January 19, 2011 final rule.

The final rule includes provisions for rotating targets in circumstances of testing daylight openings that might not fit targets well when the targets are oriented in their original upright position (z-axis (long axis) aligned vertically). S5.2.5.2 provides for the rotation of the targets by 90 degrees about the y-axis of the target, such that the positive z-axis of the target (long axis) becomes horizontal and points in the direction of the positive vehicle x-axis. To maintain the same spacing between targets when the long axis of the target is vertical or horizontal, the final rule specifies that the 170 mm value is associated with the x-axis of the targets and the 135 mm value is associated with the z-axis of the targets.

Reconsideration Requests

The Alliance believes that the reference coordinate axes used throughout the regulation, and particularly in S5.2, need illustrations and/or figures to better define the vehicle, headform and target axes, especially with rotation of the headform. TRW and ASC ask for clarification of S5.2.5.1.1 as to the specified distances between the target's local z-axis and x-axis, i.e., whether the distances remain constant irrespective of target orientation. Both the Alliance and ASC provide figures to illustrate their understanding of S5.2.5.1.1 and S5.2.5.2 and ask if their understanding is correct. They suggest that figures be added to the regulatory text to help clarify the relationship between vehicle and target axes when assessing possible target elimination.

Agency Response

We are granting this request. The figures submitted by the Alliance, TRW and ASC correctly interpret the regulatory text in S5.2.5.1.1. We agree that adding figures to the regulatory text would be helpful. We are adding the figures below to the regulatory text as new Figures 5a and 5b. Figure 3 below (new Figure 5a in the regulatory text) shows the vehicle and target coordinate systems from the perspective of a viewer facing the left side of the vehicle exterior. The minimum distance of 170 mm and 135 mm between the x and z axes, respectively, are also shown. The left side of the figure shows these minimum distances for vertically-oriented targets and the right side of the figure shows these for horizontally-oriented targets. Additionally, the right side of the figure provides the orientation of the z axis of the target specified in S5.2.5.2.

Figure 4 below (new Figure 5b in the regulatory text) shows the vehicle and target coordinate systems from the perspective of a viewer facing the right side of the vehicle exterior.

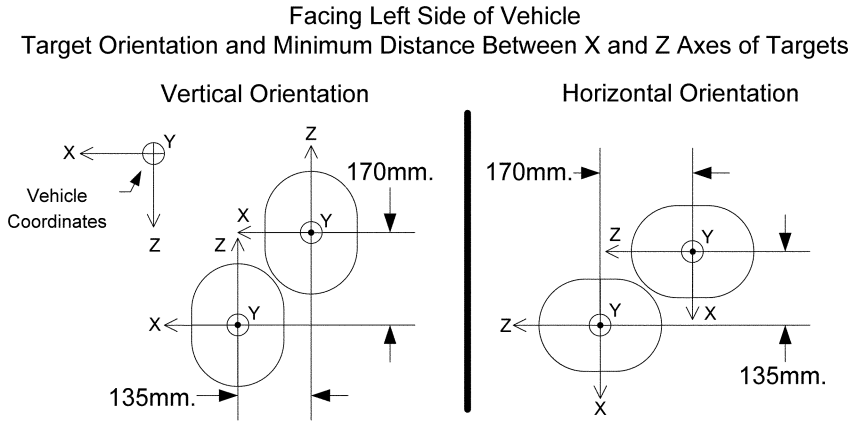

Figure 3 (Figure "5a" in regulatory text)

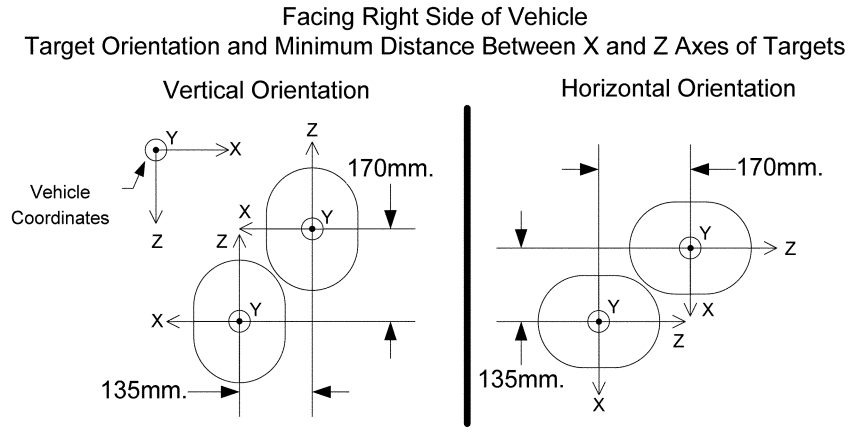

Figure 4 (Figure "5b" in regulatory text)

A reference to these new figures will be made in S5.2.5.1.1 and S5.2.5.2. Also, a typographical error is corrected in S5.2.5.1.1. The Alliance has noted that in the fourth sentence of S5.2.5.1.1, ''y axis'' is incorrectly referenced. The correct reference is ''x axis.''

b. Target Reconstitution

S5.2.5.1.2 of the final rule regulatory text specifies a process by which a third target is added to the daylight opening if there are only two targets remaining at the conclusion of a preliminary stage of target identification, and the absolute distance between the two target centers is greater than or equal to 360 mm. The third added target is placed such that its center bisects a line connecting the two targets that had remained.

Under S5.2.5.2, *Target reorientation—90 degree rotation,* if there are three or fewer (vertical) targets in a side daylight opening at the conclusion of the procedure in S5.2.5.1, the entire target process is repeated with the targets rotated by 90 degrees (horizontal targets). If this second target process results in more targets in the daylight opening than found under S5.2.5.1, i.e., more horizontal targets than vertical targets, the horizontal targets will be used as the final target locations. The possibility exists for a scenario under which three horizontal targets are placed in the daylight opening under S5.2.5.1.2, if only two or fewer vertical targets can fit in the opening.

Reconsideration Request

ASC asks whether a distance greater than 360 mm, specified in S5.2.5.1.2, should be used to determine the need for a third target when the targeting process is performed with targets rotated 90 degrees as per S5.2.5.2. The petitioner asks: ''If the 360 mm has been established to minimize overlapping of targets in the vertical orientation, would it not be appropriate to increase this distance when the targets are rotated 90°?'' ASC believes that, given the headform dimensions of 176.8 x 226.1 mm, if the absolute distance between two vertically oriented targets is at 360 mm, the third target will almost touch the two existing targets (with a maximum of 3.2 mm gap on each side). ASC further states that ''if the absolute distance between 2 horizontally-oriented targets is at 360 mm, the 3rd target will overlap the 2 existing targets by as much as 46.1 mm on each.''

Agency Response

We decline to increase the 360 mm distance for horizontally-oriented targets.[32] There is a potential for three horizontal targets to represent the final target locations under provisions of S5.2.5.2. The question presented is whether the overlap of the horizontal targets is excessive compared to the overlap ''permitted'' by the standard for vertical targeting configurations. To help in this assessment we have constructed Figure 6, below. This figure shows the maximum allowable overlap of targets under three different scenarios.

Note that the maximum amount of overlap is achieved when a target axis of a target is aligned with that of another. In the three scenarios of Figure 6, the horizontal axes are aligned. Example 1 shows the maximum overlap for vertically-oriented targets under the provision of S5.2.5.1.1.[33] The linear overlap of these targets is 42 mm and the area of overlap is 5,460 mm^2. Example 2 shows the maximum overlap for horizontally-oriented targets under the provision of S5.2.5.1.1. The linear overlap of these targets is 56 mm and the area of overlap is 5,060 mm^2. Example 3 shows the maximum overlap for horizontal targets under the provision of S5.2.5.1.2.[34] The linear overlap of these targets is 46 mm and the area of overlap is 3,810 mm^2.

Example 3 is the situation for which ASC suggests the agency should make some form of accommodation to reduce the potential overlap. However, we see that, when compared to Examples 1 and 2, Example 3 has a smaller area of overlap than Examples 1 or 2 and less linear overlap than Example 2. The maximum potential overlap under S5.2.5.1.2 for horizontal targets is, in fact, less than the maximum potential target overlap for other target configurations. All-in-all, we do not believe that these targeting scenarios allow for excessive overlap. The targeting procedures ensure that the ejection mitigation countermeasure is evaluated throughout coverage of the daylight opening. Accordingly, because we do not believe the overlap allowed for horizontal targets by S5.2.5.1.2 is excessive, we see no reason to limit it further.

[32] We wish to note that if a daylight opening has the size and shape to accommodate both three vertically- and three horizontally-oriented targets (as appears in the example shown in the petitioner's figure on page 7 of its petition), the final targets must be vertical (see S5.2.5.2). Thus, the predicament highlighted in the petition in the figure would not occur in real-world testing.

[33] For simplicity, we used an approximation of the target area outline with correct vertical and horizontal dimensions, rather than the exact cubic equation prescribed in the final rule.

[34] The maximum overlap would be the situation where the targets' horizontal axes are aligned. Under S5.2.5.1.2 the third target is placed between two target centers that are separated by at least 360 mm. The third target is placed such that its target center bisects the line connecting the outer targets. Thus the target centers of the overlapping targets are separated by 180 mm.

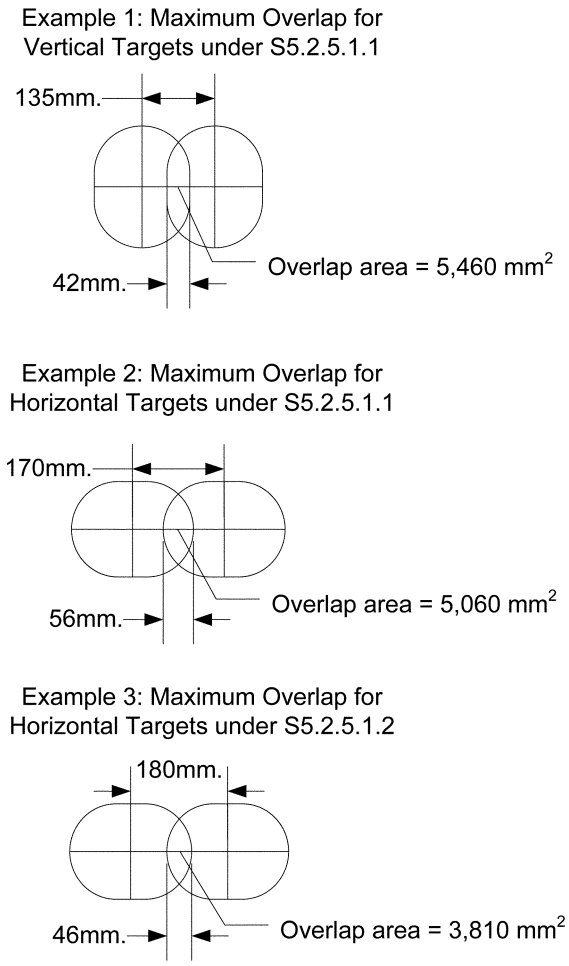

Figure 6 – Maximum overlap of targets under various scenarios

c. Rotating the Headform

The final rule at S5.2.5.3 specifies that if no targets can fit in the daylight opening in either the vertical or horizontal orientation, the target is rotated about its y-axis in 5 degree increments. From the initial target orientation as defined in S5.2.2.2(a), the direction of rotation is such that the local z-axis is moved toward the vehicle positive x-axis. This continues to be the direction of rotation, for all subsequent increments of rotation.

Reconsideration Request

ASC is unsatisfied with the manner in which the headform is rotated under S5.2.5.3. The petitioner states that for some daylight openings, the target/headform would need to be rotated more than 270 degrees from its initial position to fit in the opening. ASC believes that in such an instance, rotating the target/headform in the opposite direction ''would be more consistent with the adjustment capabilities of the impactor.''

Agency Response

We are denying this request. While the suggestion makes some sense, we prefer not deviating from the straightforward, objective instruction in the current regulatory text as to how the target/headform is to be rotated. The agency will perform its testing by rotating the target/headform in the specified direction. However, there is nothing to preclude a manufacturer from rotating the target/headform in the opposite direction if it believes it will have no bearing on its ability to certify to the standard.

VIII. Targeting Accuracy

S7.4 of the regulatory text reads as set forth in the January 19, 2011 final rule.

The NPRM provided the following illustration in the preamble to explain the requirement (74 FR at 63216–63217):

As shown in Figure 16, a zone could be established by first determining the ''ejection impactor targeting point,'' the intersection of the x- and y-axes on the outer surface of the headform. Next, the location of first contact between the impactor and the ejection mitigation countermeasure (e.g., ejection mitigation air bag curtain) would be determined, based on the location of the target outlines using the methodology in the compliance test specified for identifying the target outlines. A 100 mm wide zone would be determined by defining two vertical longitudinal planes that are 50 mm on either side of the expected location of contact by the impactor with the countermeasure. These longitudinal planes define a portion of the strike zone. The other portion of the zone would be defined by locating the axis normal to and passing through the target outline center. As the impactor targeting point passes at test speed through the 100 mm wide zone (as it passes ''over the plate,'' using the baseball analogy), it must stay within ±10 mm of the axis passing through the center of the target outline center (continuing the analogy, it must stay within the vertical zone bounded by the batter's knees and chest). This assessment would not be conducted with an ejection mitigation air bag curtain

deployed, as the deployed curtain could obstruct accurate measurement of the impactor location and the effect of air bag interaction is assessed by the specification previously discussed.

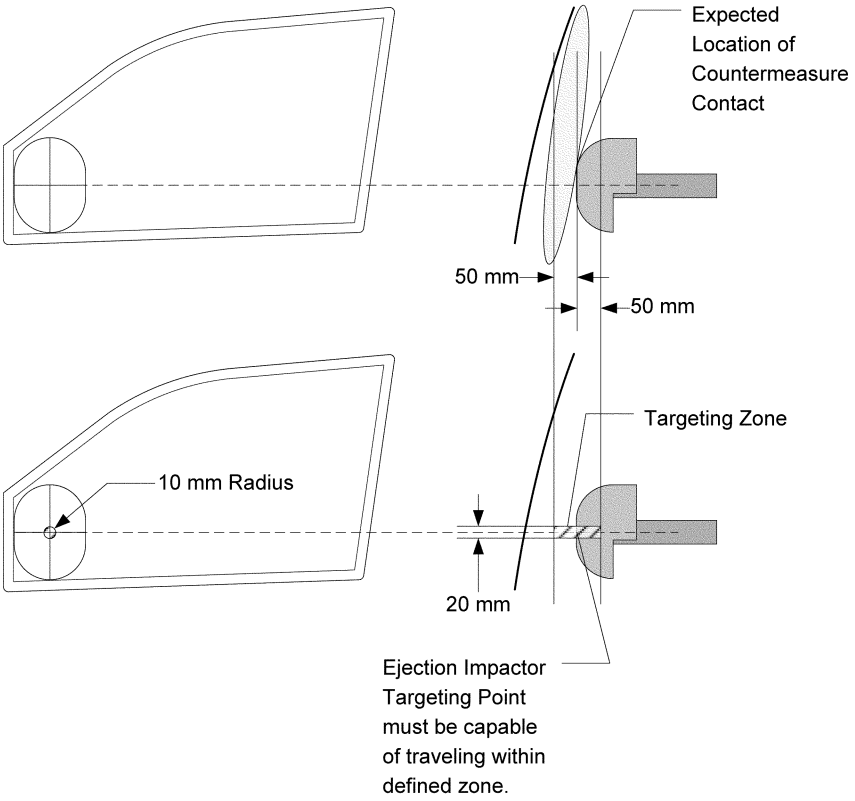

Figure 7
(Showing Figure 16 in NPRM)

Petition for Reconsideration

The Alliance states that it was not certain of the intent of this requirement and was confused by it. It notes that section X(h) of the preamble stated that the final rule required that the ''impactor be able to deliver the center of the headform through a theoretical cylindrical shape.'' The Alliance states its understanding that the distance ''D'' seems to be a segment of a line that is parallel to a vehicle lateral axis. In reference to the longitudinal planes that define the ends of the cylinder, it states that ''vertical and longitudinal planes cannot be defined in vehicle coordinates as forward and rearward of a lateral segment. From a vehicle perspective, they would be inboard and outboard, or right and left of such a segment. Perhaps the second sentence should be modified to read: 'Determine that the ejection mitigation test device can deliver the ejection impactor targeting point within a cylinder with radius of 10 mm centered about the segment 'D' with 50 mm extensions at each end.' ''

Agency Response

We are granting the request to revise S7.4. The Alliance is correct that the zone specified in S7.4 is a cylinder with a 10 mm radius. However, ''D'' does not represent the line segment that the cylinder is centered around. Rather, ''D'' was intended to be a point of reference for the theoretical point of contact with the countermeasure. In response to the Alliance's comment that vertical and longitudinal planes cannot be defined in vehicle coordinates as forward and rearward of a lateral segment, the terms ''forward'' and ''rearward'' in S7.4 were intended to be in reference to the impactor's direction of travel, not the vehicle coordinate system.

After reading the Alliance's petition, we have revised S7.4 solely for purposes of clarifying it. No substantive change is intended. Among other things, we have rewritten S7.4 to indicate the cylindrical nature of the zone of interest and to eliminate the reference to distance ''D,'' since the reference to D was confusing to the petitioner.

IX. Glazing

The final rule included these and other provisions regarding glazing issues:

• The high speed impact test is performed with the glazing pre-broken, fully retracted or removed prior to the

impact test. The vehicle manufacturer has the option of choosing the test condition. (As a practical matter, pre-breaking tempered glazing will destroy the glazing, so tempered glazing is either fully retracted or removed.)

- The final rule does not allow the use of movable glazing as the sole means of meeting the displacement limit of the standard (i.e., movable glazing is not permitted to be used without a side curtain air bag).
- Fixed glazing could be used as the sole means of meeting the displacement limit of the standard; the glazing would have to be advanced glazing in order to meet the pre-breaking procedure of the standard.
- If a vehicle has movable advanced glazing, the low speed test is performed with the advanced glazing retracted or removed from the daylight opening.

a. Applying Pre-Breaking Procedure

TRW repeats a view it made in its comment to the NPRM. TRW requests the agency to reconsider the requirement to perform testing of vehicles with movable advanced glazing with the glazing in place and pre-broken. The petitioner's approach is to test with all movable glass removed, and allow a ''bonus'' to vehicles fitted with movable advanced glazing. The bonus would consist of an additional amount of impactor displacement, so for example, a maximum displacement of 150 mm would be permitted. The petitioner states that such a method would eliminate the need for ''onerous'' glass pre-breakage. The petitioner also believes that our response to this suggestion, when TRW made it in its comment, was ''inappropriate,'' in that the suggested approach would result in a more stringent standard, TRW thought, not one that would be less stringent, as NHTSA had determined.

Agency Response

We do not agree to TRW's request to have all testing with movable glazing be performed with the glazing removed, rather than pre-broken. First, the ''bonus'' approach is undesirable because it presents a policy under which a motorist would have a reduced level of protection when the window is partially or fully rolled down. Thirty-one percent of front seat ejections and 28 percent of all target population ejections are through windows that were partially or fully open prior to the crash. It is for this reason that we determined that the suggested approach would lessen the severity of the test for vehicles with advanced glazing. Increasing the allowed displacement or decreasing the impact speed of the impactor at windows that had advanced glazing would reduce the protection of many motorists who may have the window partially or fully rolled down. (76 FR at 3278–3279.)

We also do not agree that we should adopt the above policy reducing the level of protection for the motorists who had the window partially or fully down as a means of providing relief to the petitioner for what it thinks is an ''onerous'' test procedure. We do not agree that the pre-breaking procedure is ''onerous.'' NHTSA addressed this issue in the final rule preamble (76 FR at 3279):

> We estimate that it takes our laboratory technicians about 30 minutes to mark the 50 mm grid pattern and punch all the holes for a relatively large front row side window. The time it takes to mark the holes per glazing pane can be significantly shortened by laying an unmarked pane on top of an already marked pane. If a subsequent test is to be performed (as might be the case during research and development) and the door trim is installed, it takes approximately 20 to 60 minutes to replace the glazing. Often this is done in parallel with preparations for other aspects of the test, so the overall test time is not affected appreciably. This procedure is not difficult or onerous to conduct.

TRW has not provided any additional information on this topic than what was provided in comments to the NPRM. Our decision on this issue remains as it did when we analyzed those comments.

For the above reasons, the petitioner's request is denied.

b. Pre-Breaking Procedure Applies to All Glazing

Paragraph S5.4 of FMVSS No. 226 states in part: ''Subject to S5.5(b), prior to impact testing, the glazing covering the target location must be removed from the side daylight opening, fully retracted, or pre-broken according to the procedure in S5.4.1 . . .''

The Alliance questions why the phrase ''subject to S5.5(b)'' is used in S5.4. The Alliance states that the phrase ''except for S5.5(b)'' should be used instead, ''to clarify the pre-breaking does not apply to S5.5(b).''

Agency Response

We are not making the change. It appears that the Alliance has misinterpreted S5.4 and S5.5(b). Contrary to the petitioner's understanding, the pre-breaking procedure applies to S5.5(b). Specifically, the pre-breaking procedure applies to fixed glazing tested under S5.5(b). There is never a situation under any part of the standard in which glazing is left in place and unbroken.

In S5.4, the phrase ''subject to S5.5(b)'' modifies the instruction in S5.4. Under S5.4 without the modifying instruction, the vehicle manufacturer has the option of removing the glazing, retracting [35] it, or pre-breaking it. The ''subject to S5.5(b)'' clause is modifying the ability to choose an option. I.e., under S5.5(b), movable glazing must be removed or retracted—it cannot remain for the low speed test. If the glazing is fixed, it will not be removed but it will be pre-broken under the terms and conditions of S5.4.[36]

Accordingly, the petitioner's request is denied.

c. Meaning of ''Movable Glazing''

S5.5(b) includes a direction to ''remove or fully retract any movable glazing from the side daylight opening.''

The Alliance asks what is meant by the term ''movable glazing.'' The petitioner specifically asks about rear windows that are hinged at one edge of the glazing and that are partially opened by rotating the window outwards, which the petitioner calls ''pop-out windows.'' The Alliance believes that because these windows do not fully retract, pop-out windows could function as an FMVSS No. 226 countermeasure and should be considered ''fixed.''

Also, the petitioner asks about emergency egress windows on some large vans and mini-buses. The Alliance states that the windows are closed during normal operation and must be unlocked to provide egress during emergency situations. The petitioner asks that these windows be considered ''fixed.''

Agency Response

We consider pop-out windows to be ''movable glazing.'' ''Movable glazing'' refers to glazing designed to be moved with respect to vehicle or frame. We have added a definition to the regulatory text. The glazing can be opened to the outside environment. Movable glazing is typically not permanently attached on all edges in its frame, compared to fixed glazing. Field data have cases of movable laminated glazing detaching from the window opening in a rollover, partly, we believe, because the glazing is not encapsulated in a framed structure.[37] We do not think

[35] The glazing may be retracted instead of being removed if it can be fully retracted from the daylight opening.

[36] As a practical matter, tempered glass can simply be removed rather than pre-broken. Tempered glass will shatter and vacate the window opening when subjected to the pre-breaking procedure.

[37] See the final rule's discussion of the field data showing the unpredictable nature of movable laminated glazing in real world crashes. 76 FR at 3277–3278.

it is necessary to indicate the mechanism by which the glazing moves, or the direction in which it moves.

Pop-out glazing is more like retractable glazing than fixed glazing in terms of how well it is attached to its frame. We do not have reason to think that a laminated pop-out window would perform better in a rollover than a laminated window that moves up and down on a track mechanism.

With regard to ''emergency egress windows,'' as far as we can tell, the glazing is movable and falls under the term ''movable glazing.'' We come to a different conclusion if an emergency egress window could not be used in the ''open'' position at all when the vehicle is in motion, and have added that condition to the definition.

d. Hinges and Latches

The agency also received a question by email from Autoliv [38] on whether the hinge or latch components of a pop-out window should be considered when determining the daylight opening.

Agency Response

Our answer is yes. Our observations of current pop-out window designs indicate that the hinge and latch mechanisms would be within the 100 mm lateral distance from the inside surface of the window, and as such would be included in the determination of the daylight opening. Hinge and latch components differ from grab handles in that they are physically attached to the window. Thus, their removal for testing may create an unrealistic condition for testing a laminated window since the hinge and latch components may serve to reinforce the window, at least for one test speed.[39] Also, when we include the hinge or latch components in the determination of the daylight opening, we avoid impacting the components during testing. Allowing contact of the headform with hinge or latch components may artificially impede the headform's displacement. Avoiding contact with these structures better evaluates the performance of the ejection mitigation countermeasure.

e. Side Daylight Opening When There Is No Divider

Side daylight opening is defined in S3 as set forth in the regulatory text of the January 19, 2011 final rule.

In response to a comment on the NPRM, the preamble of the final rule addressed non-structural steel dividing elements in a window opening. We stated that ''such elements would serve to define the daylight opening since they do not consist of glazing. We currently have no reasonable way to exclude these dividing elements based on the extent to which they may or may not add structural integrity to the vehicle.'' 76 FR at 3267.

In its petition for reconsideration, the Alliance asks for clarification of the meaning of ''side daylight opening'' with regard to a vehicle without a dividing element of any material between the front and rear glazing (depicted on the figure on page 12 of the Alliance's petition). The petitioner asks: Does the vehicle have a single side daylight opening for the front and rear seating, or does each separate piece of glazing constitute a separate daylight opening? The petitioner supports the latter view.

Agency Response

Our answer is we consider the vehicle to have a single side daylight opening for the front and rear rows of seats. There is no dividing element of any kind between the panes of glazing, no solid component between the two pieces of glazing. When the pieces are retracted (in the full down position), the daylight opening consists of one area. Our view is that the combined panes comprise a single daylight opening. The ''periphery of the opening'' is the frame surrounding the glazing as shown in the Alliance's figure on page 12 of its petition and not just the individual panes of glazing. No rationale or justification was provided by the Alliance for its view.

X. Other Aspects of the Test Procedure

a. Headform Cleaning

In the final rule, the agency declined to adopt a requirement in the regulatory text that the headform skin would be cleaned with isopropyl alcohol prior to a test. Several commenters had asked for such a specification. TRW stated in its comment that frictional attributes of the headform skin affect the manner in which the headform interacts with the rollover curtain, so talc, chalk, or other coatings could affect test results. TRW suggested that the standard specify that ''no coatings shall be applied to the headform skin during testing'' and asked, as did ASC in its comment, that the standard specify that, prior to the test, the headform skin must be cleaned. In the final rule, NHTSA explained that it concluded there was no need for such a requirement, as the commenters provided no data showing the necessity of such provision and a comparable standard, FMVSS No. 201, has no requirement that the free motion headform be cleaned with alcohol prior to testing.

In its petition for reconsideration, the Alliance states that it is concerned about the possible effect that headform surface coefficient of friction has on test repeatability. The petitioner states that it has preliminary data showing that ''significant excursion variation as a function of headform cleanliness,'' and that it would submit the data ''at a future date along with a recommendation.'' The petitioner did not provide such follow-on data or recommendation. The Alliance suggests we use the same procedure that is specified for the headform in FMVSS No. 201.

ASC and TRW also petition to have a headform cleaning procedure prior to each test. The petitioners recommend cleaning the headform prior to the test ''since the deposit of foreign substances on the surface of the headform could lead to a lower or higher coefficient of friction.'' They state that a modeling study shows that headform displacement at targets A1 and B1 beyond the window pane increased and decreased with a 20 percent lower and higher coefficient of friction, respectively. These petitioners further state that the test procedures for upper interior components in FMVSS No. 201, ''Occupant protection in interior impacts,'' (''201U''), provide for cleaning of the headform skin with isopropyl alcohol or equivalent prior to the test.

Agency Response

We disagree that there is a need to require the headform surface be cleaned prior to testing. The simulation results provided by TRW and ASC do not provide sufficient collaboration of their claims. The modeling results showed sensitivity to the coefficient of friction for an impact location, but there was a lack of detail and specificity about the modeling. The results were not shown relevant to actual vehicle testing. In a vehicle test, what would have to be done to the headform skin to achieve a change in the coefficient of friction of ± 20 percent? How much and what type of a foreign substance has to be on the headform to have a ± 20 percent change in the coefficient of friction? How likely is it that a headform in a compliance test would have such an amount of substance on it? Without this basic information, the submitted modeling study has not shown a need for a requirement for cleaning the headform prior to testing.

[38] Copy placed in the docket for this final rule.

[39] For movable windows, the 20 km/h high speed test is performed with the window pre-broken, but maintained in the daylight opening.

The petitioners state that precedent exists for headform cleaning. However, as we said in the preamble to the NPRM, FMVSS No. 201 has no requirement that the headform be cleaned with alcohol prior to testing in either the regulatory text or compliance test procedure (TP). Rather, Appendix A of the TP–201U is a calibration procedure for the instrumented free motion headform. Section 12.1 of that document specifies that the headform is to be cleaned prior to a calibration drop test. Such head skin cleaning is also done before drop test calibration of other ATD heads. A headform drop test is not part of the FMVSS No. 226 procedure.

b. Vehicle Test Attitude

The final rule adopted specifications relating to the vehicle test attitude (S6.1).[40] As described below, the vehicle is supported off its suspension at an attitude determined in accordance with S6.1(a) through (f). S6.1(a) through (f) are set forth in the regulatory text of this final rule.

The Alliance believes that S6.1 does not address vehicle lateral restraint, which the petitioner believes could affect the outcome of the test. The Alliance suggests that the agency add a new paragraph specifying that the vehicle must be secured on a rigid, fixture so that it is adequately restrained, and supported along the sills of the vehicle (with the frame supported at multiple locations in the case of body-on-frame construction), to prevent lateral or vertical movement.

Agency Response

We are declining the Alliance request. The standard addresses vehicle lateral restraint by specifying that the vehicle is supported off its suspension. The agency has had no indication during its extensive test program supporting the development and proposal of FMVSS No. 226 that test repeatability has been affected by a lack of additional lateral restraint. In addition, the Alliance has not provided any data to indicate that the test results can be affected by a lack of additional lateral support.

c. Inspect Air Bag Mounts

TRW and ASC made an identical request related to curtain air bag mounts. The petitioners recommended that ''the regulatory text and/or the test procedure include a provision to inspect the curtain mounts or fastening locations, in the vehicle body, prior to each test, if NHTSA were to test more than one head target location per window. The curtain airbag [sic] mounts or integrity of the fastening locations could be compromised during repeated FMVSS [No.] 226 tests.''

Agency Response

We decline to make the requested change. To begin, we do not agree with the implication that associates a curtain mount failure with a compromised test. If a curtain mount fails during an initial impact with the test device, the failure of the mount is representative of real world performance of the system.

Furthermore, the provision is unnecessary. The agency may choose to perform multiple tests on a vehicle and may reuse certain vehicle hardware, provided that the multiple tests do not compromise the vehicle's performance in the test. In general, we will visually inspect reused mounts prior to a test. We will replace components as the need arises. Having an ambiguous provision in the regulatory text to inspect the curtain mount does not add to the objectivity of the standard.

XI. Secondary Issues

a. Other Typographical Errors

In additional to the typographical errors previously mentioned in this document, this final rule also corrects the following errors which were pointed out by the Alliance in its petition:

- S5.2.1.2(c) has the term ''fixed traverse partition.'' The correct term is ''fixed transverse partition.''
- The first sentence of S5.2.5.3 refers to S5.2.2.2(a). It should be S5.2.2(a).

b. Views on a Dynamic Test Procedure

In the NPRM and the final rule preambles, the agency explained at length its reasons for not incorporating a full-scale vehicle dynamic test in FMVSS No. 226. A relevant excerpt from the final rule is as follows (76 FR 3285):

> We stated in the NPRM preamble, ''a comprehensive assessment of ejection mitigation countermeasures through full vehicle dynamic testing may only be possible if it were to involve multiple crash scenarios. Such a suite of tests imposes test burdens that could be assuaged by a component test such as that proposed today.'' 74 FR at 63186. We hope that in the future, a full vehicle dynamic test, or a suite of tests, could be developed that is appropriate for use in FMVSS No. 226. However, at this time, there is not a viable full vehicle rollover test procedure to evaluate ejection mitigation. . . . [W]e strongly disagree that a delay of this rulemaking to develop a dynamic test would be justified. This final rule will save over 370 lives a year. Each year delayed to develop what is now an indefinable full vehicle test will have a substantial human cost.

We also stated in the final rule that, while we are currently pursuing a research program looking at the development of a dynamic test to address roof strength and seat belts, a full vehicle dynamic test appropriate for ejection mitigation testing might not result as an outgrowth of the agency's roof crush and seat belt system research. ''The vehicle kinematics involved in assessing enhanced protection of the occupant within the vehicle (studied in the roof crush and belt system programs) may be significantly different from those involved in mitigating the risks of occupant ejection to belted and unbelted occupants. A dynamic test that is appropriate for assessing roof crush and seat belt performance may not necessarily provide the same kind of challenge to ejection mitigation.'' *Id.*

In its petition for reconsideration, Advocates expresses a preference for a dynamic rollover test procedure as a way to examine ''a more realistic interaction'' of occupants with rollover related countermeasures and also to ''fully quantify the costs, benefits and practicability of advanced glazing and mitigation of ejection through portals.'' Advocates believes that the agency ''should include the development of a dynamic rollover test procedure in its strategic plan.''

Agency Response

The views stated in Advocates' petition are not new. They were expressed prior to the final rule, and the agency responded to them in the final rule preamble (see above and the final rule preamble, 76 FR 3284–3285).

The views stated by Advocates do not pertain to an aspect of the final rule. The subject is not a matter for a petition for reconsideration.

NHTSA's policy views are subject to change, as safety needs, technologies, resources and priorities change. The public will have ample opportunity to provide insight and opinions on NHTSA's programs at the appropriate times. However, petitioning for reconsideration of our decision on a matter relating to future work and the agency's strategic plan is not a mechanism recognized by our rulemaking regulations. We will not engage in a discourse on our rulemaking and research priority decision-making in today's document.

The current agency rollover research is planned to continue until August 2014. At the close of that program the

[40] There are typographical errors in S6.1. Paragraph heading ''(c)'' is repeated twice, by mistake. The second (c) should be (d). Headings (d) and (e) should be (e) and (f), respectively. Errors appear in cross-references. Today's document corrects these errors. Henceforth from this point, we will refer to the corrected headings and cross-references.

agency will assess any applicability of the results to safety issues beyond the assessment of roof strength and restraint optimization. The need for future research into full-vehicle ejection mitigation testing will then be assessed along with all other agency endeavors and priorities.

XII. Rulemaking Analyses and Notices

Executive Order 12866 (Regulatory Planning and Review) and DOT Regulatory Policies and Procedures

This rulemaking is not ''significant'' under E.O. 12866, ''Regulatory Planning and Review'' and the Department's regulatory policies and procedures. Although the January 19, 2011 final rule was significant, this response to petitions for reconsideration mostly denies the petitions for reconsideration of the rule. The few changes that are being made in response to the petitions for reconsideration are minor, mostly to clarify the requirements of the standard. One substantive change is to permit, for vehicles with a partition separating an occupant seating area from a cargo area, the partition to have a door, but even that change is not significant. We estimate that today's final rule has no effect on the estimated costs and benefits and other economic impacts of the January 19, 2011 final rule.

Regulatory Flexibility Act

The Regulatory Flexibility Act of 1980, as amended, requires agencies to evaluate the potential effects of their proposed and final rules on small businesses, small organizations and small governmental jurisdictions. I hereby certify that this final rule will not have a significant economic impact on a substantial number of small entities. Small organizations and small governmental units will not be significantly affected since the potential cost impacts associated with this final rule will not significantly affect the price of new motor vehicles.

This final rule denies most of the petitions for reconsideration of the January 19, 2011 final rule. To the extent we are amending the original final rule, we are mainly clarifying requirements, such as by adopting a definition. The amendment to permit partitions between an occupant area and a cargo area to have a door may have a small positive impact on some small final-stage manufacturers and alterers by giving them flexibility to use partitions with doors. We do not believe that the impact is significant.

Executive Order 13132 (Federalism)

NHTSA has examined today's final rule pursuant to Executive Order 13132 (64 FR 43255, August 10, 1999). We conclude that no additional consultation with States, local governments or their representatives is mandated beyond the rulemaking process. The agency has concluded that the rulemaking would not have sufficient federalism implications to warrant consultation with State and local officials or the preparation of a federalism summary impact statement. The final rule would not have ''substantial direct effects on the States, on the relationship between the national government and the States, or on the distribution of power and responsibilities among the various levels of government.''

NHTSA rules can preempt in two ways. First, the National Traffic and Motor Vehicle Safety Act contains an express preemption provision: When a motor vehicle safety standard is in effect under this chapter, a State or a political subdivision of a State may prescribe or continue in effect a standard applicable to the same aspect of performance of a motor vehicle or motor vehicle equipment only if the standard is identical to the standard prescribed under this chapter. 49 U.S.C. § 30103(b)(1). It is this statutory command by Congress that preempts any non-identical State legislative and administrative law addressing the same aspect of performance.

The express preemption provision described above is subject to a savings clause under which ''[c]ompliance with a motor vehicle safety standard prescribed under this chapter does not exempt a person from liability at common law.'' 49 U.S.C. 30103(e) Pursuant to this provision, State common law tort causes of action against motor vehicle manufacturers that might otherwise be preempted by the express preemption provision are generally preserved. However, the Supreme Court has recognized the possibility, in some instances, of implied preemption of such State common law tort causes of action by virtue of NHTSA's rules, even if not expressly preempted. This second way that NHTSA rules can preempt is dependent upon there being an actual conflict between an FMVSS and the higher standard that would effectively be imposed on motor vehicle manufacturers if someone obtained a State common law tort judgment against the manufacturer, notwithstanding the manufacturer's compliance with the NHTSA standard. Because most NHTSA standards established by an FMVSS are minimum standards, a State common law tort cause of action that seeks to impose a higher standard on motor vehicle manufacturers will generally not be preempted. However, if and when such a conflict does exist—for example, when the standard at issue is both a minimum and a maximum standard—the State common law tort cause of action is impliedly preempted. See *Geier* v. *American Honda Motor Co.,* 529 U.S. 861 (2000).

Pursuant to Executive Order 13132 and 12988, NHTSA has considered whether this rule could or should preempt State common law causes of action. The agency's ability to announce its conclusion regarding the preemptive effect of one of its rules reduces the likelihood that preemption will be an issue in any subsequent tort litigation.

To this end, the agency has examined the nature (e.g., the language and structure of the regulatory text) and objectives of today's rule and finds that this rule, like many NHTSA rules, prescribes only a minimum safety standard. As such, NHTSA does not intend that this rule preempt state tort law that would effectively impose a higher standard on motor vehicle manufacturers than that established by today's rule. Establishment of a higher standard by means of State tort law would not conflict with the minimum standard announced here. Without any conflict, there could not be any implied preemption of a State common law tort cause of action.

Executive Order 12778 (Civil Justice Reform)

With respect to the review of the promulgation of a new regulation, section 3(b) of Executive Order 12988, ''Civil Justice Reform'' (61 FR 4729, February 7, 1996) requires that Executive agencies make every reasonable effort to ensure that the regulation: (1) Clearly specifies the preemptive effect; (2) clearly specifies the effect on existing Federal law or regulation; (3) provides a clear legal standard for affected conduct, while promoting simplification and burden reduction; (4) clearly specifies the retroactive effect, if any; (5) adequately defines key terms; and (6) addresses other important issues affecting clarity and general draftsmanship under any guidelines issued by the Attorney General. This document is consistent with that requirement.

Pursuant to this Order, NHTSA notes as follows.

The issue of preemption is discussed above in connection with E.O. 13132. NHTSA notes further that there is no

requirement that individuals submit a petition for reconsideration or pursue other administrative proceedings before they may file suit in court.

Unfunded Mandates Reform Act

The Unfunded Mandates Reform Act of 1995 (UMRA) requires Federal agencies to prepare a written assessment of the costs, benefits and other effects of proposed or final rules that include a Federal mandate likely to result in the expenditure by State, local or tribal governments, in the aggregate, or by the private sector, of more than $100 million in any one year ($100 million adjusted annually for inflation, with base year of 1995). This final rule responding to petitions for reconsideration will not result in a cost of $139 million or more to either State, local, or tribal governments, in the aggregate, or the private sector. Thus, this final rule is not subject to the requirements of sections 202 of the UMRA.

National Technology Transfer and Advancement Act

Under the National Technology Transfer and Advancement Act of 1995 (NTTAA)(Public Law 104–113), all Federal agencies and departments shall use technical standards that are developed or adopted by voluntary consensus standards bodies, using such technical standards as a means to carry out policy objectives or activities determined by the agencies and departments. Voluntary consensus standards are technical standards (e.g., materials specifications, test methods, sampling procedures, and business practices) that are developed or adopted by voluntary consensus standards bodies. The NTTAA directs us to provide Congress, through OMB, explanations when we decide not to use available and applicable voluntary consensus standards.

The agency discussed our analysis of the NTTAA in the January 19, 2011 final rule and our conclusion that voluntary industry standards for glazing would not satisfy the agency's objectives in this rulemaking. 76 FR at 3296. Those conclusions continue to reflect the agency's findings in this area.

National Environmental Policy Act

NHTSA has analyzed this final rule for the purposes of the National Environmental Policy Act. The agency has determined that implementation of this action would not have any significant impact on the quality of the human environment.

Plain Language

Executive Order 12866 requires each agency to write all rules in plain language. Application of the principles of plain language includes consideration of the following questions:

- Have we organized the material to suit the public's needs?
- Are the requirements in the rule clearly stated?
- Does the rule contain technical language or jargon that isn't clear?
- Would a different format (grouping and order of sections, use of headings, paragraphing) make the rule easier to understand?
- Would more (but shorter) sections be better?
- Could we improve clarity by adding tables, lists, or diagrams?
- What else could we do to make the rule easier to understand?

If you have any responses to these questions, please write to us about them.

List of Subjects in 49 CFR Part 571

Imports, Motor vehicle safety, Reporting and recordkeeping requirements, Tires.

In consideration of the foregoing, NHTSA amends 49 CFR part 571 as set forth below.

PART 571—FEDERAL MOTOR VEHICLE SAFETY STANDARDS

■ 1. The authority citation for part 571 continues to read as follows:

Authority: 49 U.S.C. 322, 30111, 30115, 30117 and 30166; delegation of authority at 49 CFR 1.95.

■ 2. Section 571.226 is amended by:

■ a. Amending S3 by revising the definition of ''modified roof'' and adding, in alphabetical order, a definition for ''movable window'';

■ b. Revising S5.2.1.2(c), S5.2.5.1.1, S5.2.5.2, S5.2.5.3, S6.1, and S7.4; and

■ c. Adding Figures 5a and 5b after Figure 5.

The additions and revisions read as follows:

§ 571.226 Standard No. 226; Ejection Mitigation.

* * * * *

S3. *Definitions.*

* * * * *

Modified roof means the replacement roof on a motor vehicle whose original roof has been removed, in part or in total, or a roof that has to be built over the driver's compartment in vehicles that did not have an original roof over the driver's compartment. *Movable window* means a daylight opening composed of glazing designed to be moved with respect to the vehicle or frame while the vehicle is in motion.

* * * * *

S5.2.1.2(c) *Vehicles with partitions or bulkheads.* If a vehicle has a fixed transverse partition or bulkhead behind which there are no designated seating positions, a vertical transverse vehicle plane 25 mm forward of the most forward portion of the partition or bulkhead defines the rearward edge of the offset line for the purposes of determining target locations when said plane is forward of the limiting plane defined in S5.2.1.2(a) or (b).

* * * * *

S5.2.5.1.1 *Target elimination.* Determine the horizontal and vertical distance between the centers of the targets. If the minimum distance between the z axes of the targets is less than 135 mm and the minimum distance between the x axes of the targets is less than 170 mm, eliminate the targets in the order of priority given in steps 1 through 4 of Table 1 (see Figure 5, 5a and 5b) (figures provided for illustration purposes). In each case, both the z axes of the targets must be closer than 135 mm and x axes of the targets must be closer than 170 mm. If the minimum distance between the z axes of the targets is not less than 135 mm or the minimum distance between the x axes of the targets is not less than 170 mm, do not eliminate the target. Continue checking all the targets listed in steps 1 through 4 of Table 1.

* * * * *

S5.2.5.2 *Target reorientation—90 degree rotation.* If after following the procedure given in S5.2.5.1 there are less than four targets in a side daylight opening, repeat the procedure in 5.2 through 5.2.5.1.2, with a modification to S5.2 as follows. Reorient the target by rotating it 90 degrees about the y axis of the target such that the target positive z axis is aligned within ±1 degree of the vehicle longitudinal axis, pointing in the direction of the vehicle positive x axis (see Figures 5a and 5b) (figures provided for illustration purposes). If after performing the procedure in this section, the remaining targets exceed the number of targets determined with the original orientation of the target, the reoriented targets represent the final target locations for the side daylight opening.

S5.2.5.3 *Target reorientation incremental rotation.* If after following the procedure given in S5.2.5.2 there are no targets in a side daylight opening, starting with the target in the position defined in S5.2.2(a), reorient the target by rotating it in 5 degree increments about the y axis of the target by rotating

the target positive z axis toward the vehicle positive x axis. At each increment of rotation, attempt to fit the target within the offset line of the side daylight opening. At the first increment of rotation where the target will fit, place the target center as close as possible to the geometric center of the side daylight opening. If more than one position exists that is closest to the geometric center of the side daylight opening, select the lowest.

* * * * *

S6.1 *Vehicle test attitude.* The vehicle is supported off its suspension at an attitude determined in accordance with S6.1(a) through (f).

(a) The vehicle is loaded to its unloaded vehicle weight.

(b) All tires are inflated to the manufacturer's specifications listed on the vehicle's tire placard.

(c) Place vehicle on a level surface.

(d) Pitch: Measure the sill angle of the driver door sill and mark where the angle is measured.

(e) Roll: Mark a point on the vehicle body above the left and right front wheel wells. Determine the vertical height of these two points from the level surface.

(f) Support the vehicle off its suspension such that the driver door sill angle is within ±1 degree of that measured at the marked area in S6.1(d) and the vertical height difference of the two points marked in S6.1(e) is within ±5 mm of the vertical height difference determined in S6.1(e).

* * * * *

S7.4 *Targeting accuracy.* Determine that the ejection mitigation test device can deliver the ejection impactor targeting point through a zone defined by a cylinder with a 20 mm diameter and 100 mm length, when the ejection impactor is moving at the speed specified in S5.5. The projection of the long axis of the cylinder is normal to the target and passes through the target center. The long axis of the cylinder is bisected by a vehicle vertical longitudinal plane passing through the theoretical point of impact with the countermeasure.

* * * * *

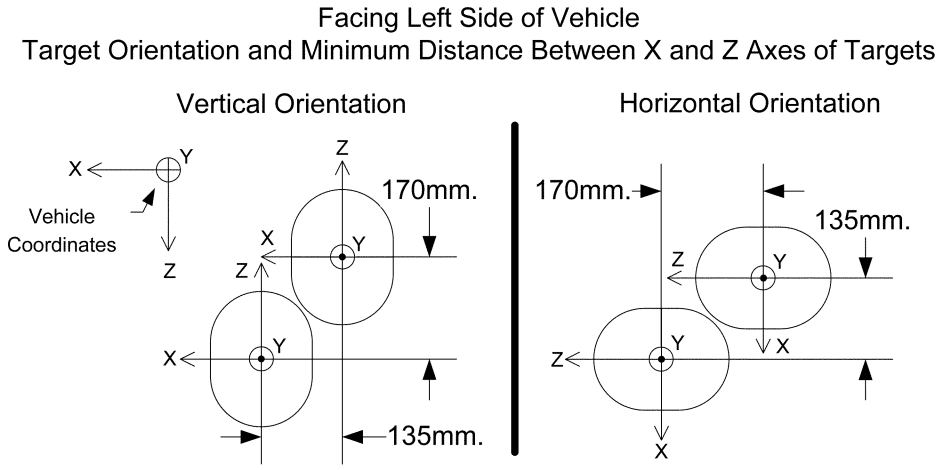

Figure 5a

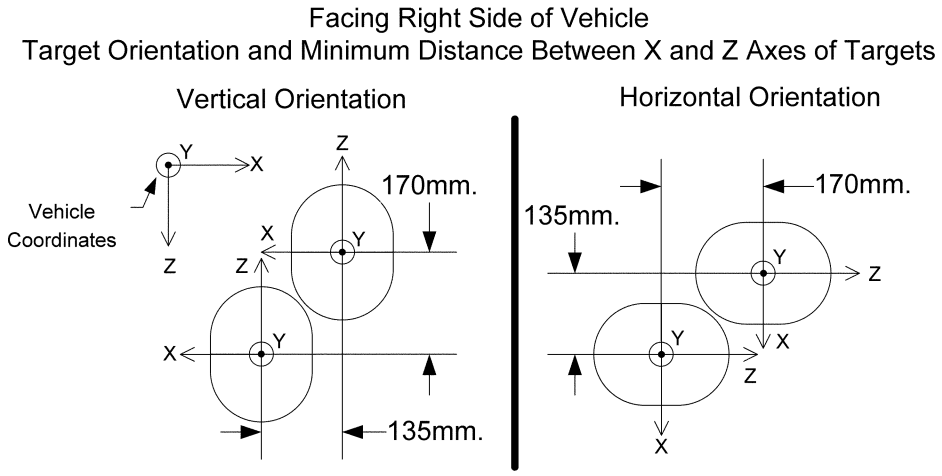

Figure 5b

* * * * *

Issued on August 29, 2013.

David L. Strickland,

Administrator.

[FR Doc. 2013–21605 Filed 9–6–13; 8:45 am]

BILLING CODE 4910–59–P